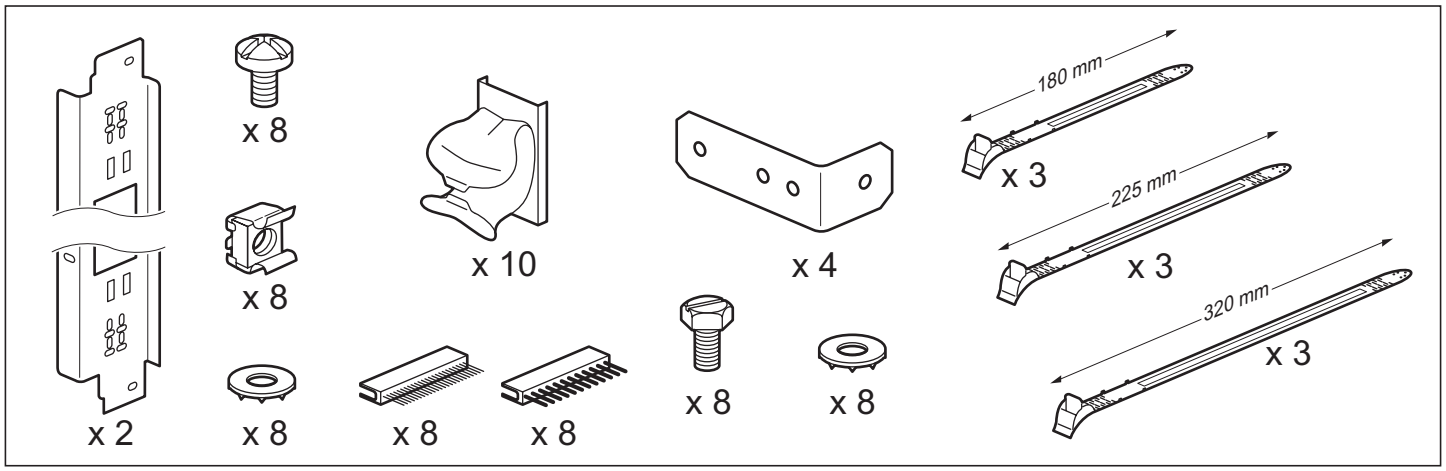
x 2
x 8
x 8
x 8
x 8
x 8
x 10
x 4
x 8
x 8
180 mm
x 3
225 mm
x 3
320 mm
x 3

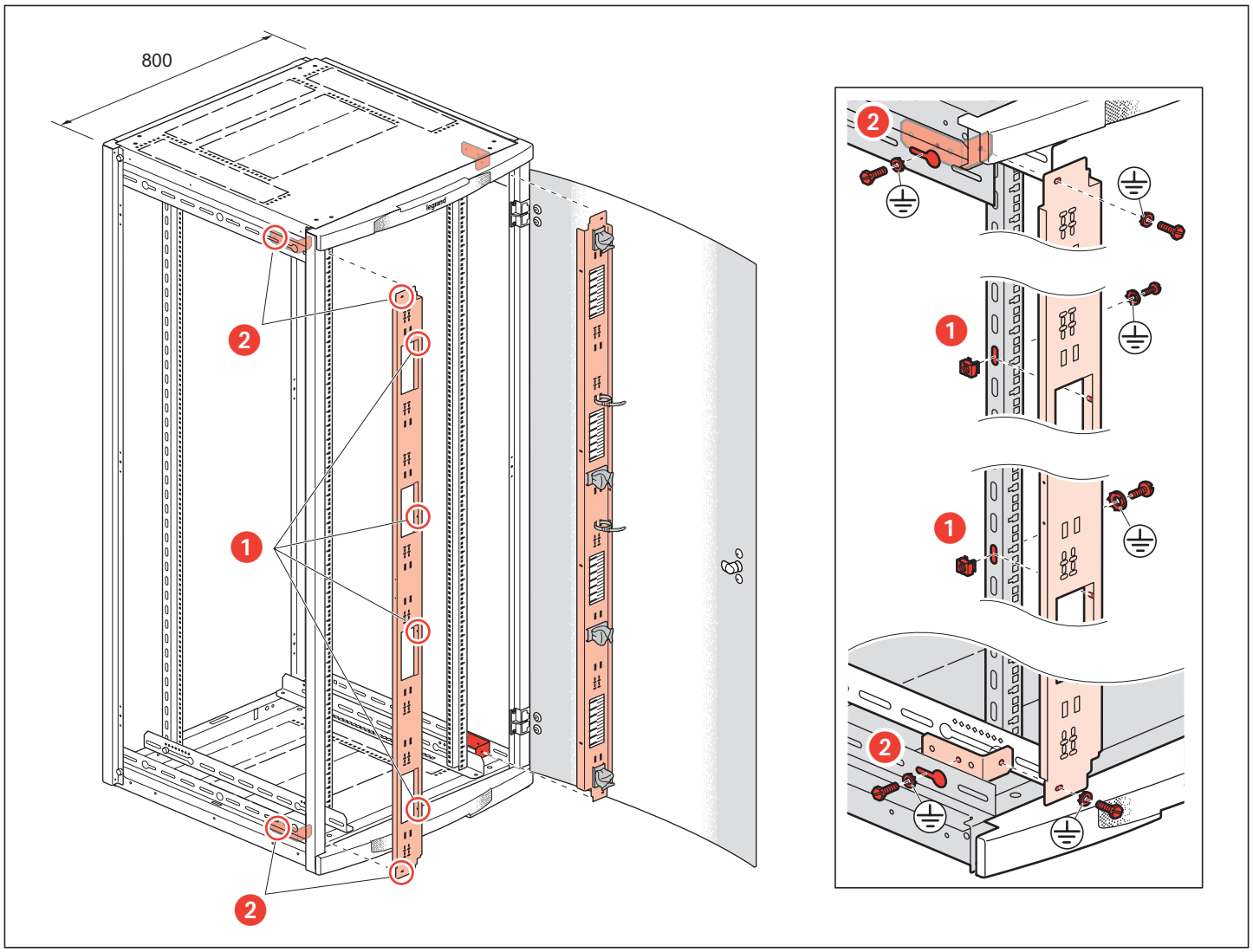
800
2
1
2
2
1
1
2

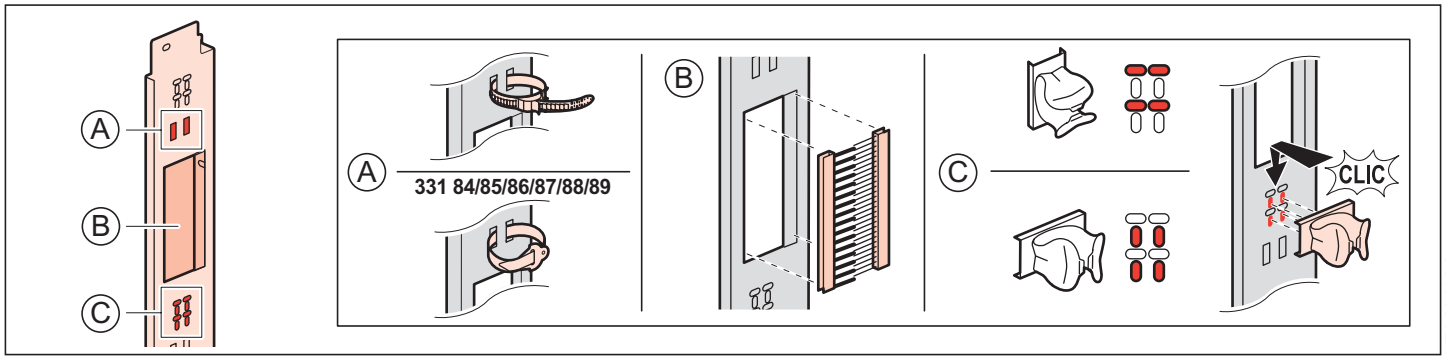
A
B
C
A
331 84/85/86/87/88/89
B
C
CLIC

LE04146AA

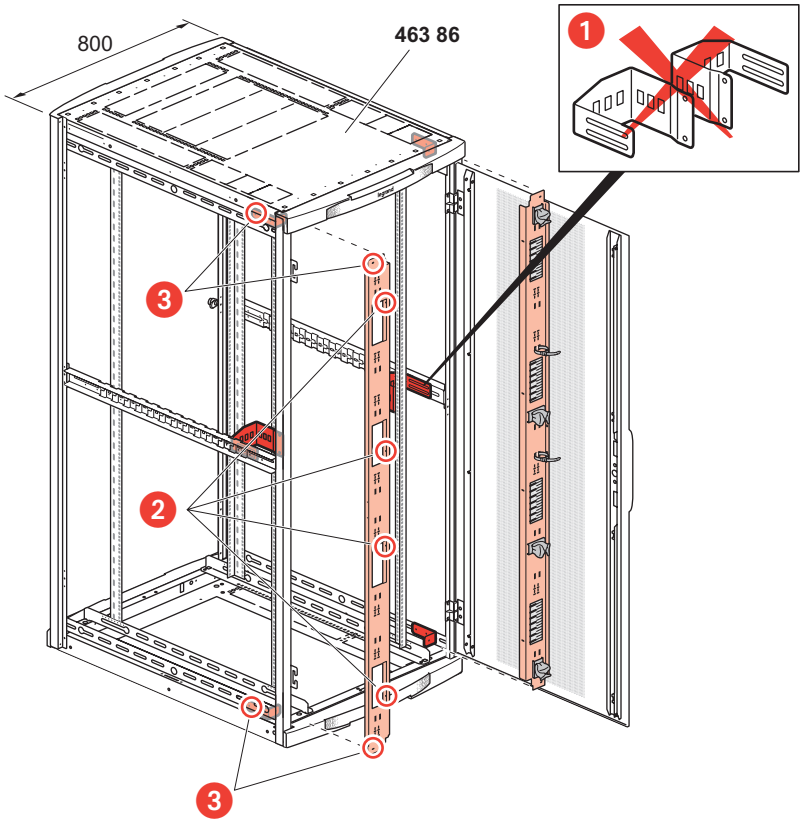
800
463 86
1
2
3

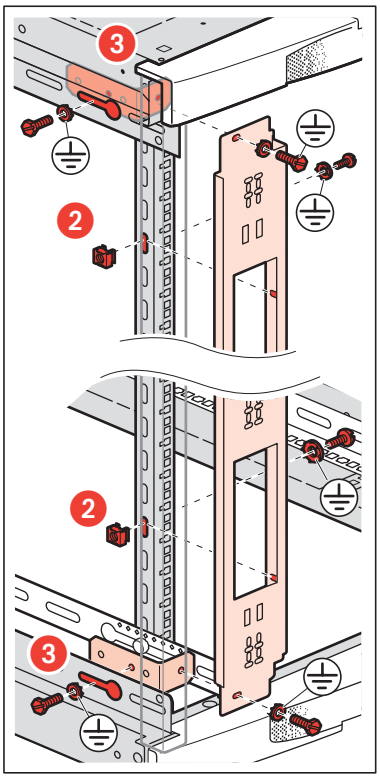
3
2
2
3

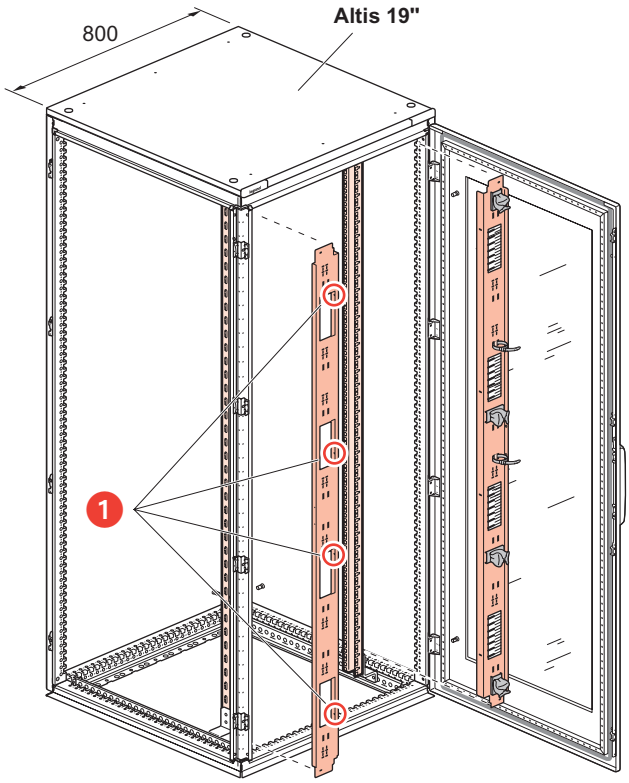
800
Altis 19"
1

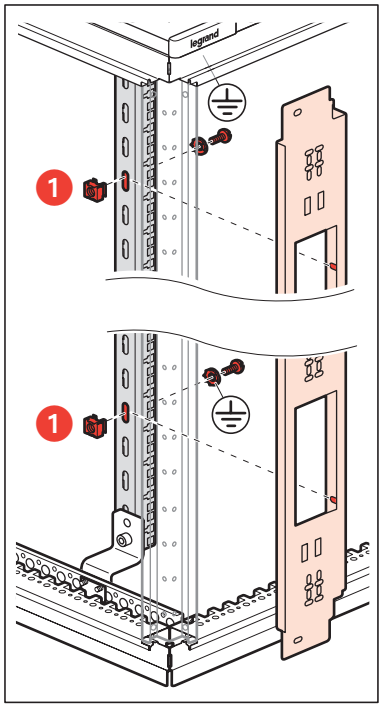
legrand
1
1

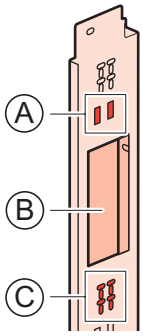
A
B
C

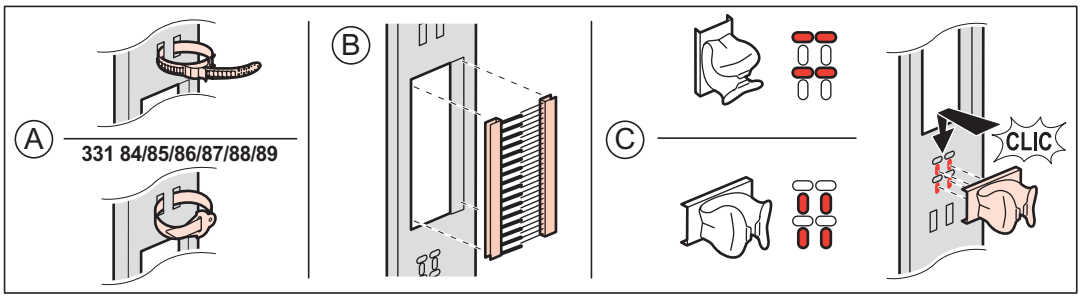
A
331 84/85/86/87/88/89
B
C
CLIC

LE04146AA