BERN

~220-240V
50-60Hz

IP54

LED

REPLACE

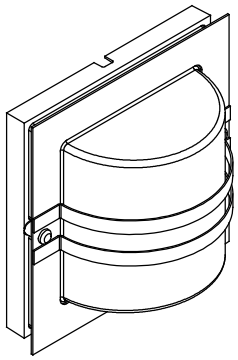

BERN

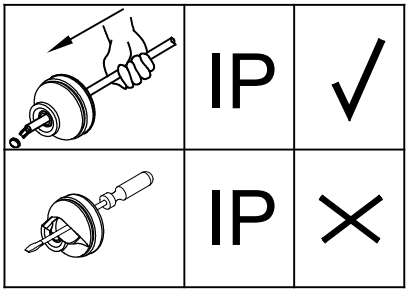

LICENSED ELECTRICIAN !!!

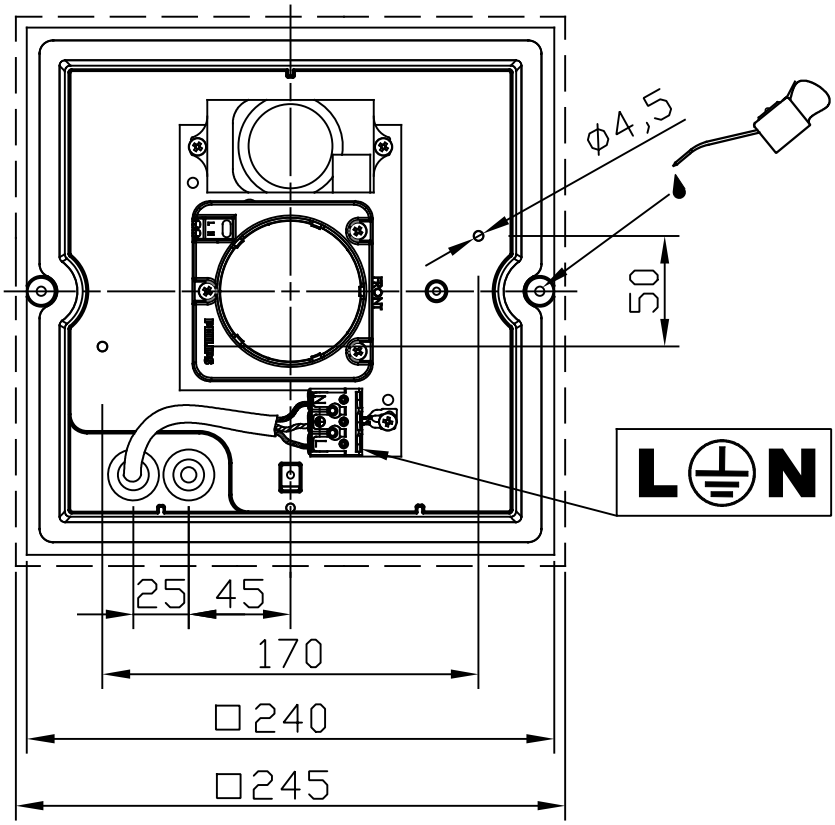

SENS

Detection range setting (sensitivity)

Detection range is the term used to describe the radii of the more or less circular detection zone produced on the ground after mounting the sensor light at a height of 2.5m, turn the reach control fully anticlockwise to select minimum reach (approx.1m radii), and fully clockwise to select maximum reach (approx. 10m radii).

NOTE: the above detection distance is gained in the case of a person who is between 1.6m~1.7m tall with middle figure and moves at a speed of 1.0~1.5m/sec. If person's stature, figure and moving speed change, the detection distance will also change.

TIME

Time setting

The light can be set to stay ON for any period of time between approx. 6sec(turn fully anticlockwise) and a maximum of 12min(turn fully clockwise). Any movement detected before this time elapse will re-start the timer. It is recommended to select the shortest time for adjusting the detection zone and for performing the walk test.

NOTE: after the light switches OFF, it takes approx. 1sec before it is able to start detecting movement again.The light will only switch on in response to movement once this period has elapsed.

LUX

Light-control setting

The chosen light response threshold can be infinitely from approx. 2-2000lux. Turn it fully anti-clockwise to select dusk- to-dawn operation at about 2 lux. Turn it fully clockwise to select daylight operation at about 2000lux. The knob must be turned fully clockwise when adjusting the detection zone and performing the walk test in daylight.

Note: please don't adjust the three functional buttons to excess. That is because the three functional buttons were connected to the components directly, there is a small stopper in each of the three components, when you adjust the buttons from start to end, the excessive turn will damage the stopper, and lead to the 360°non-stop turn around. Theadjust range limit is 270°, please do pay attention to this.

OFF

LICENSED ELECTRICIAN !!!

LED ⇄ LED

(PL) Ze względu na zachowanie wysokiego stopnia szczelności IP, oprawa została sklasyfikowana jako produkt wyposażony.
Wymiana modułu LED możliwa tylko przez profesjonalny serwis.

(ENG) Due to maintaining a high degree of IP thihtess, the luminarie was classified as an equipped product.
LED module replacement is only possible by professional service.

GASKET Ø7-10,5mm

10-12mm
ø7-10,5mm
3x max.2,5 ◘

max.1,5 ◘

NORLYS

Rev: 17.11.2021

(ENG) The light source contained in this luminaire shall only be replaced by the manufacturer or his service agent or a similar qualified person.

(NOR) Installasjon skal utføres av en autorisert installatør/fagmann.

(SWE) All installation skall utföras av auktoriserad elinstallatör.

(DE) Die Montage und der Austausch der in dieser Leuchte enthaltenen Lichtquelle dürfen nur durch den Hersteller oder seinen Kundendienst oder eine gleich qualifizierte Person ausgeführt werden. Bitte lokale Bestimmungen beachten!

(FR) Le montage et le remplacement de la source lumineuse du luminaire doit être fait uniquement par le fabricant, un agent de maintenance ou une personne ayant des qualifications similaires. Merci de respecter la règlementation nationale.

(PL) Źródło światła zastosowane w tej oprawie oświetleniowej powinno być wymieniane wyłącznie przez producenta lub jego przedstawiciela serwisowego, lub podobnie wykwalifikowaną osobę.

(ENG) Turn off the power before replacing the light source.

(NOR) Skru av strømmen før skifte av lyskilde.

(SWE) Koppla bort strömmen innan byte av ljuskälla sker.

(DE) Schalten Sie die Stromversorgung aus, bevor Sie die Lichtquelle austauschen.

(FR) Éteindre le courant avant de remplacer la source lumineuse.

(PL) Wyłącz zasilanie przed wymianą źródła światła.

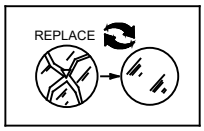

(ENG) Replace any cracked protective screen.

(NOR) Sprukket glass må skiftes

(SWE) Sprucket glas måste bytas.

(DE) Ersetzen Sie jeden beschädigten Schutzschirm.

(FR) Remplacer les écrans de protection fissurés.

(PL) Wymienić każdy pęknięty ekran ochronny.

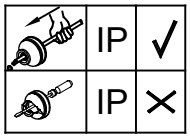

(ENG) Only pierce NORLYS gasket with the installation cable of 7-10,5mm diameter.
Damage caused by tools will lead to IP degradation. Wrong installation leads to loss of warranty.

(NOR) Gjennombor NORLYS-pakning med installasjonskabel ø7-10,5 mm diameter. Skader forårsaket av verktøy vil føre til IP-nedbrytning. Feil installasjon fører til tap av garanti.

(SWE) Använd endast 7-10,5mm Ø kabel för genomträngning av packningar. Skador orsakade av andra typer av verktyg kan sänka IP-klassning på armaturen. Felaktig installation kan orsaka garantiförlust.

(DE) Nur NORLYS Dichtung mit dem Installationskabel eines Durchmessers von 7-10,5mm durchstechen.
Beschädigung durch Werkzeuge führt zu IP Verminderung und Garantieverlust.

(FR)
Percez seulement le joint NORLYS avec le câble d'installation d'un diamètre de 7 à 10,5 mm.
Les dommages causés par des outils entraîneront une dégradation de l'IP et la perte de garantie !

(PL)
Uszczelkę NORLYS Ø7-10,5mm przebijać tylko przewodem instalacyjnym. Przebicie innymi narzędziami powoduje utratę szczelności IP oraz utratę gwarancji.

NORLYS

High-frequency microwave sensor used for detecting motion

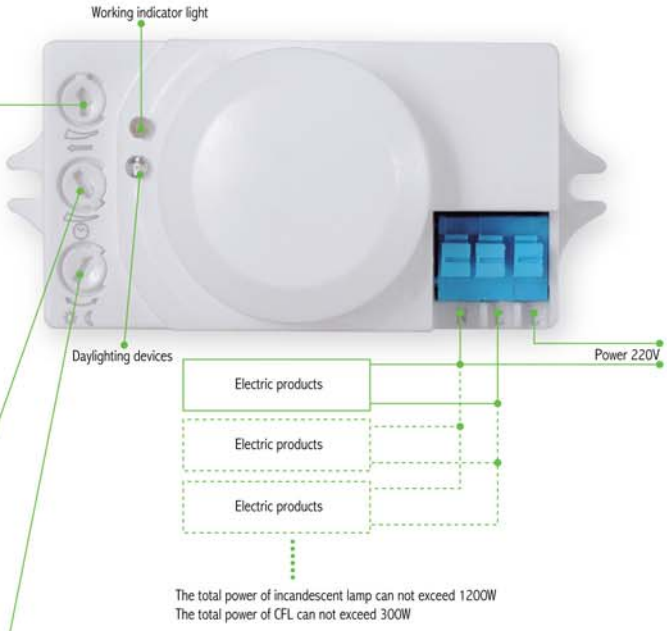

Detection range setting (sensitivity)

SENS

Detection range is the term used to describe the radii of the more or less circular detection zone produced on the ground after mounting the sensor light at a height of 2.5m, turn the reach control fully anticlockwise to select minimum reach (approx.1m radii), and fully clockwise to select maximum reach (approx. 10m radii).

NOTE: the above detection distance is gained in the case of a person who is between 1.6m~1.7m tall with middle figure and moves at a speed of 1.0~1.5m/sec. if person's stature, figure and moving speed change, the detection distance will also change.

Time setting

TIME

The light can be set to stay ON for any period of time between approx. 6sec(turn fully anticlockwise) and a maximum of 12min(turn fully clockwise). Any movement detected before this time elapse will re-start the timer. It is recommended to select the shortest time for adjusting the detection zone and for performing the walk test.

NOTE: after the light switches OFF, it takes approx. 1sec before it is able to start detecting movement again.The light will only switch on in response to movement once this period has elapsed.

Light-control setting

LUX

The chosen light response threshold can be infinitely from approx. 2-2000lux. Turn it fully anti-clockwise to select dusk- to-dawn operation at about 2 lux. Turn it fully clockwise to select daylight operation at about 2000lux. The knob must be turned fully clockwise when adjusting the detection zone and performing the walk test in daylight.

Note: please don't adjust the three functional buttons to excess. That is because the three functional buttons were connected to the components directly, there is a small stopper in each of the three components, when you adjust the buttons from start to end, the excessive turn will damage the stopper, and lead to the 360°non-stop turn around. Theadjust range limit is 270°, please do pay attention to this.

FOR OCCASIONS

The Control Switching Devices,installed in the nonmetallic objects.
Can be widely used in home\market\office building\factory\hotel\institution etc.

OUTDOOR USE

According to customer needs with selected **IP55**

INSALLED INSIDE ON THE DEVICE WITH NON-METALLIC MATERIALS

EG, Add the sensor, From one normal lighing to automatic sensor lamp.

Living room

Hotels

Office

Meeting Room

Type	Color Box	Quantity	Corrugated Paper	Product Weight	N.W	G.W
PD-MV1005	68x48x102mm	100PCS	36.5x29x44cm	68.3g	6.8kg	11.6kg

pdlux®

High-frequency microwave sensor used for detecting motion

TÜV SÜD EMC TÜV SÜD LVD CE0168 CB R&TTE RoHS COMPLIANT

PD-MV1005 HF Sensor

PD-MV1005 is a moving object sensor that can detect range of 360°and it's working frequency is 5.8G.The advantage of this product is stable working state (stable working temperature: -15°C~+70°C, PD-MV1005 adopts a microwave sensor (high-frequency output<0.2mW),so that it is safe and performs better than infrared sensor.

It can be installed inside of product that is made of glass and plastic because that these materials make little effect to microwave. Connect the product as shows below; you can change a common light to an automatic light.

Applications

- Intelligent switch
- Ceiling switch
- Sensor light

Signature Strengths

- Small size
- Wide inducting range
- Broad application scope

TECHNICAL SPECIFICATIONS

Power source:	220-240V/AC
Power frequency:	50Hz
Installation sit:	Ceiling mounting
HF system:	5.8GHz CW radar，ISM band
Transmission power:	<0.2mW
Detection angle:	360°(Ceiling installation)
Rated load:	1200W Max. (220VAC Incandescent cosφ=1) 300W Max. (220VAC Fluorescent cosφ=0.5)
Detection range:	1-10m (radii.)
Time setting:	6sec to12min
Light-control:	2-2000LUX
Standby power:	Approx. 0.9W

Detection range,time setting,light-control can be customization available

PRODUCTS SIZE

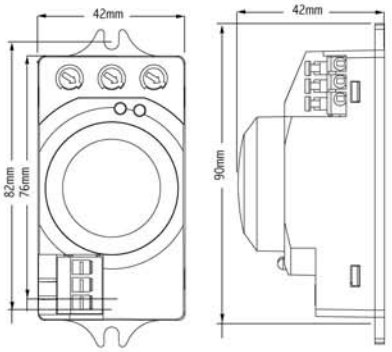

DETECTING AREA CHART

ceiling installation

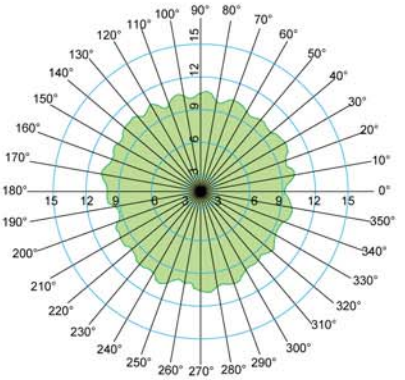

⚠ suggested installation height 2.5-5m

Detection range may change due to different installation height