CYQS150DK80F/C/R **CYQM150DK80F/C/R**
CYQS200DK100F/C/R **CYQM200DK100F/C/R**
CYQS250DK140F/C/R **CYQM250DK140F/C/R**

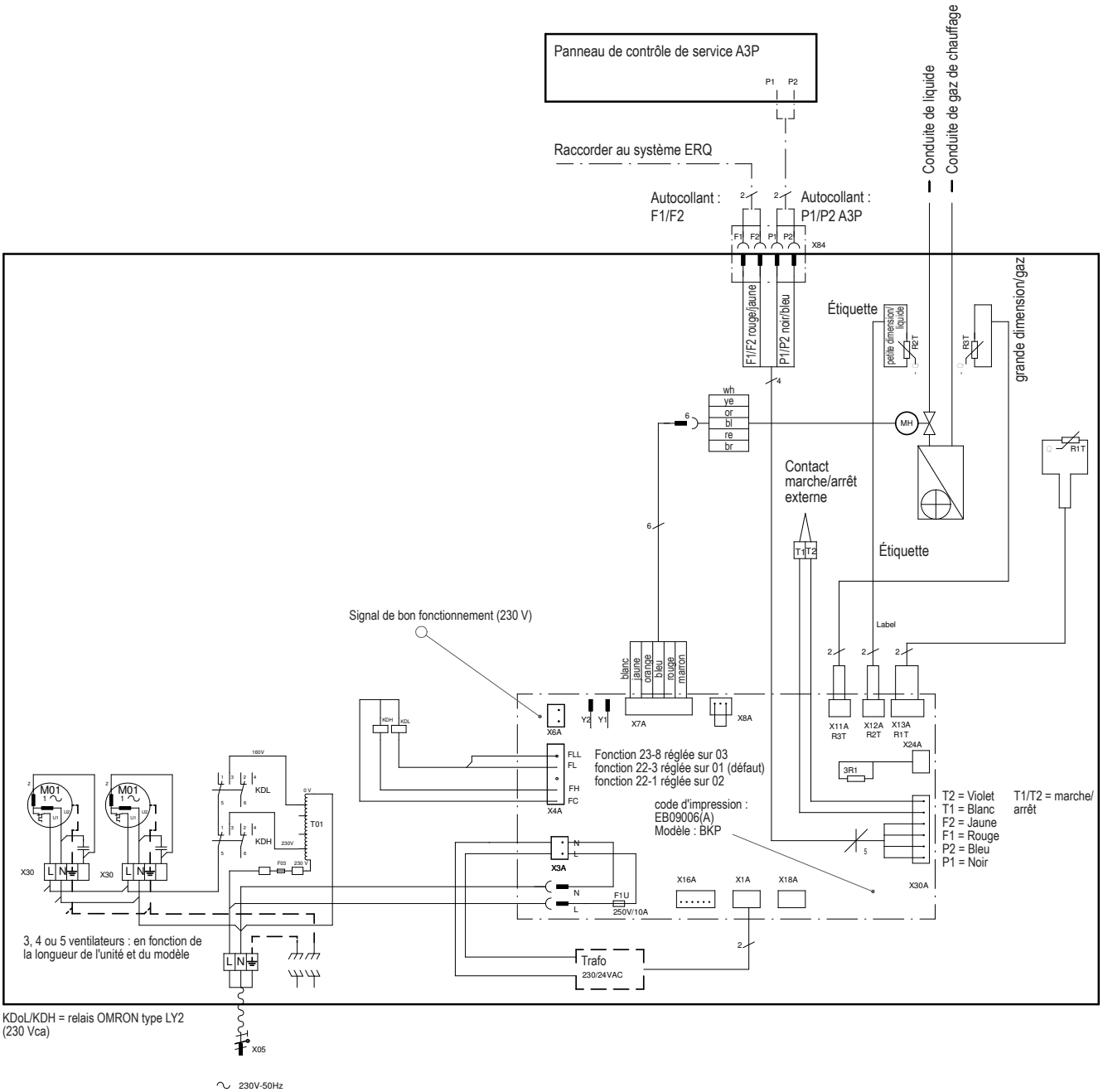

KDoL/KDH = relais OMRON type LY2 (230 Vca)