EBLA09-16(DW1-DV3) / EBLA09-16(3DW1-3DV3)
EDLA09-16(DW1-DV3) / EDLA09-16(3DW1-3DV3)

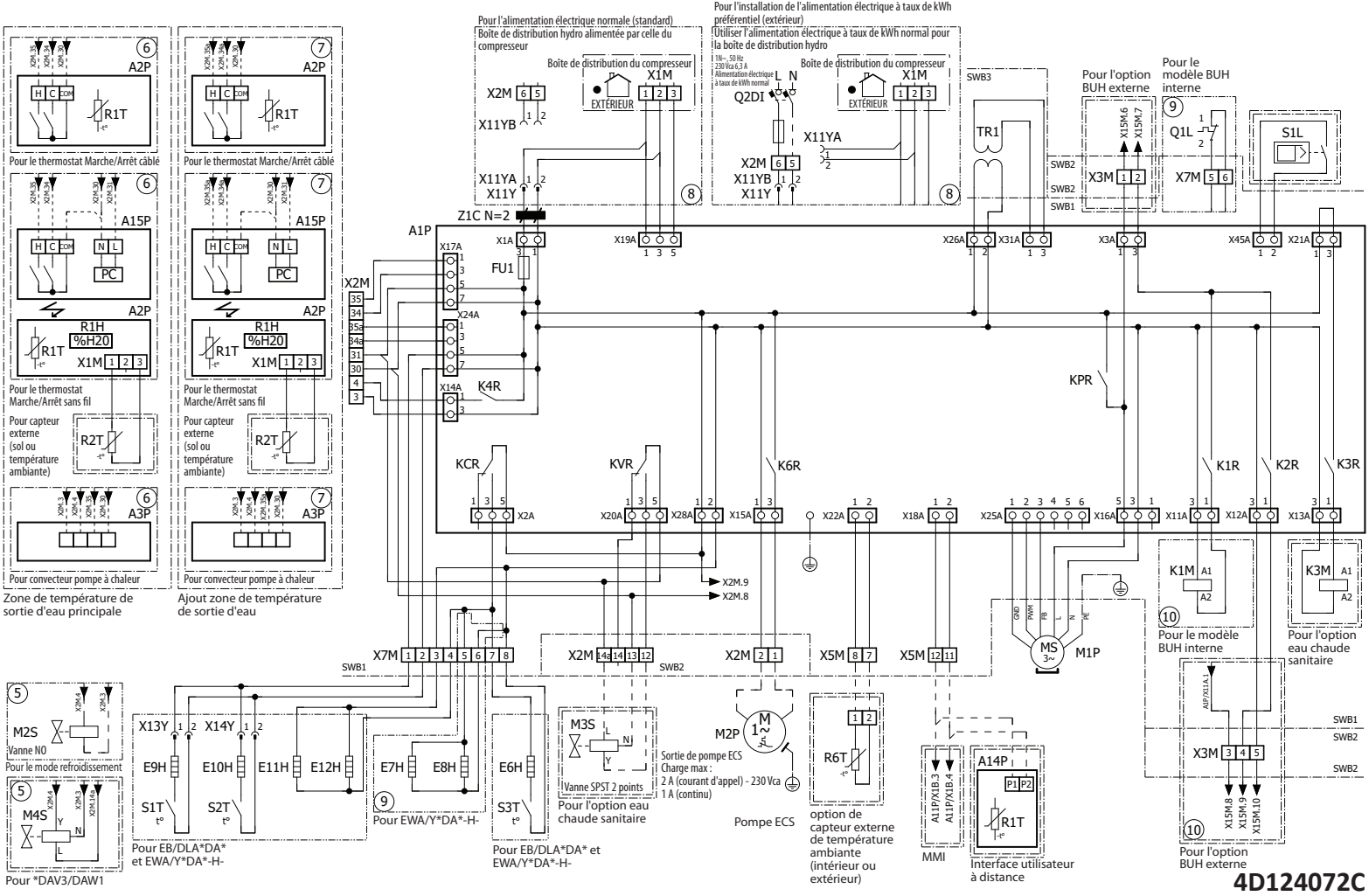

4D124072C