E(B-D)LA09-16DV3_DW1
E(B-D)LA09-16D3V3_D3W1

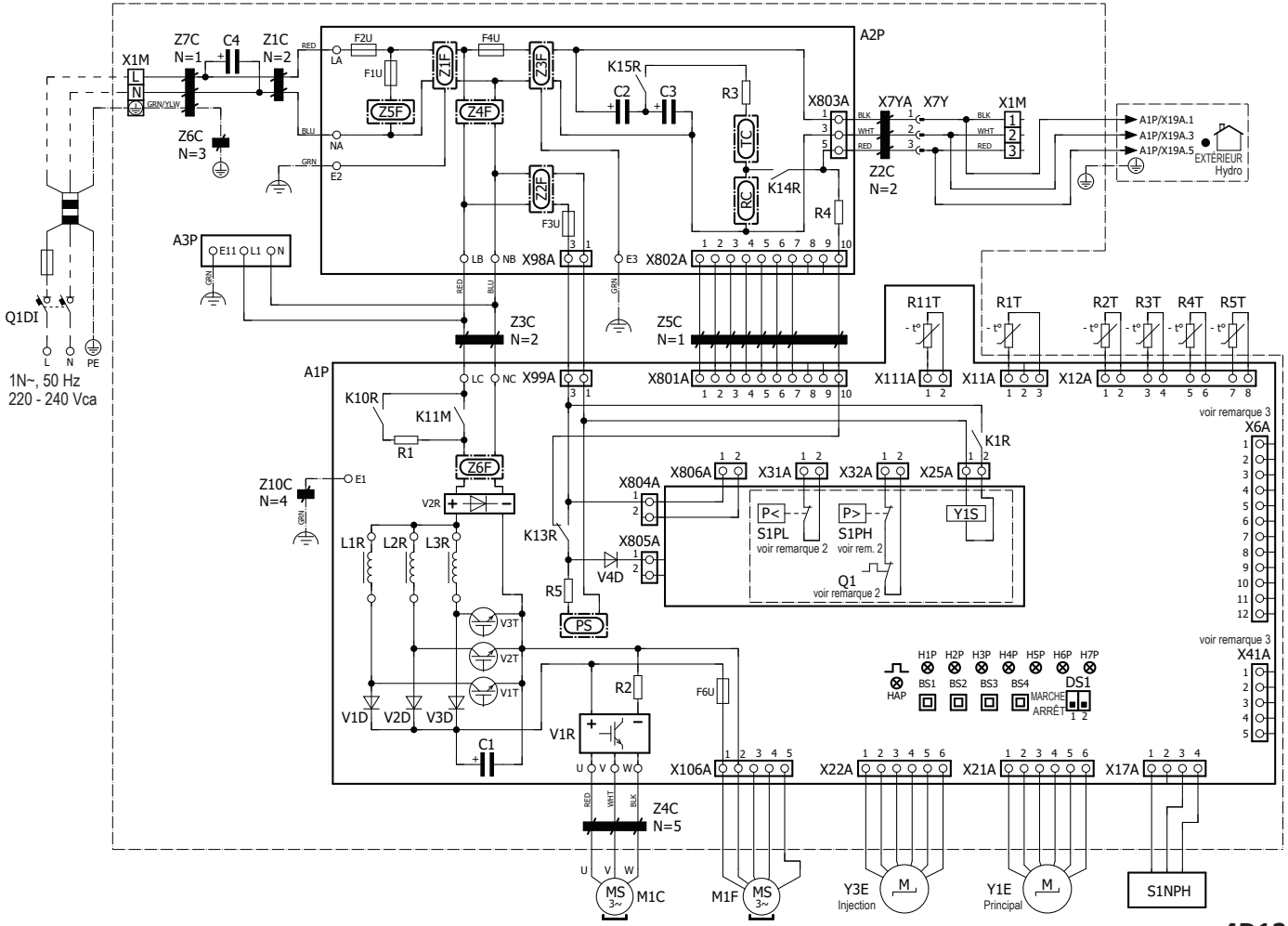

4D124072B