HXHD-A8

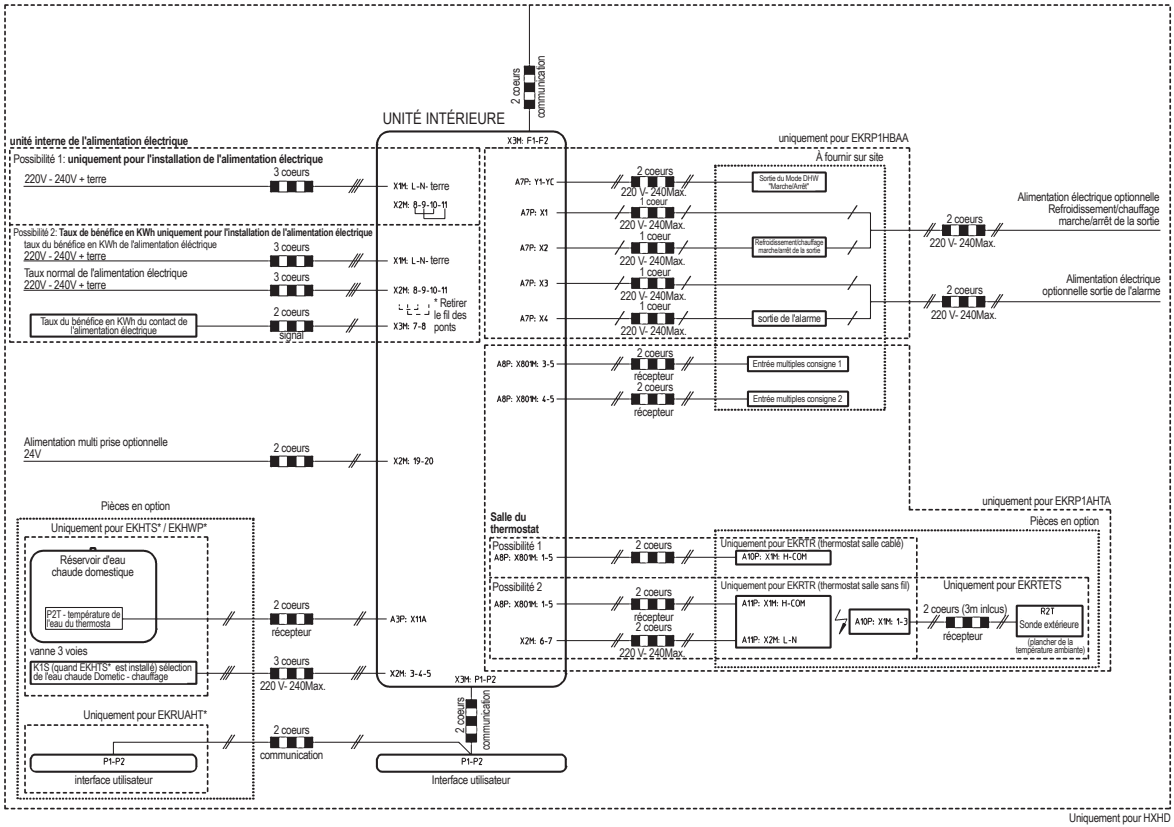

2TW60656-1(2)