THIS COPY IS PROVIDED ON A RESTRICTED BASIS AND IS NOT TO BE USED IN ANY WAY DETRIMENTAL TO THE INTERESTS OF PANDUIT CORP.

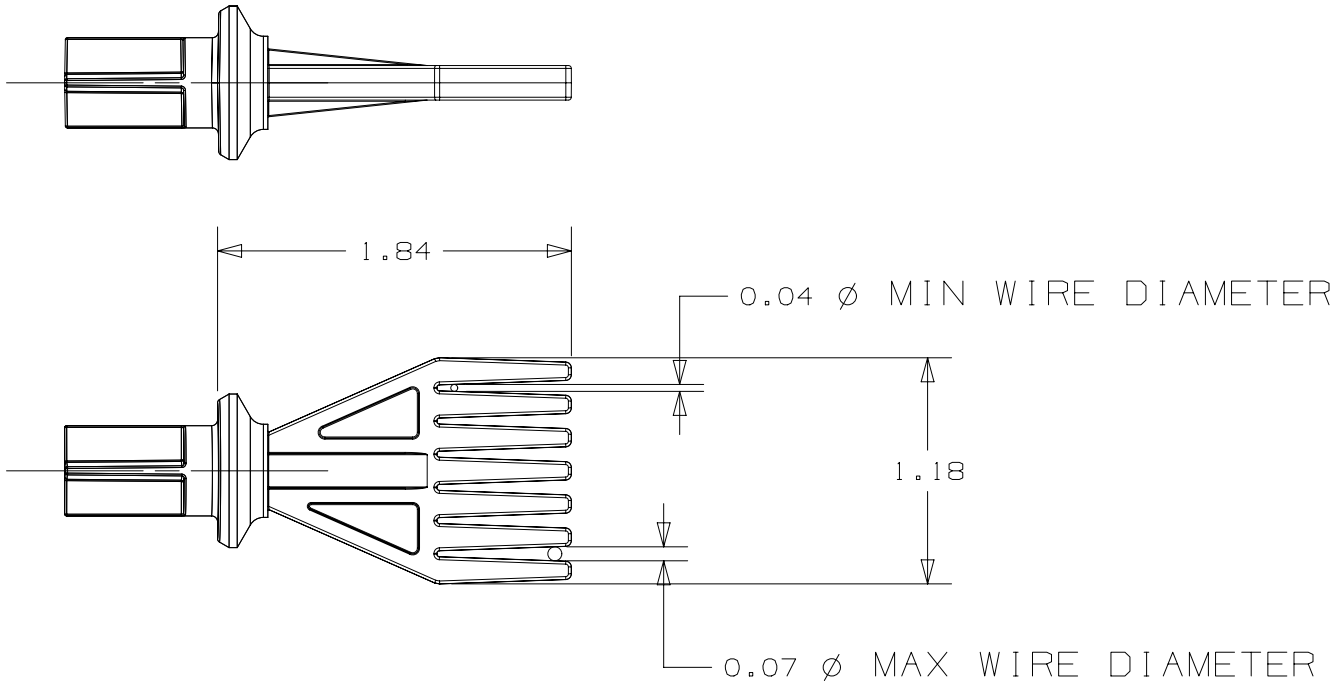

NOTES:

1. GRIPS WIRES OF 18-22 GAGE FOR USE WITH QUICK BUILD HARNESS BOARD.
2. FOR USE WITH QUICK-BUILD MOUNTING PEG P/N QB-MOUNT-L.
3. SEE CUSTOMER PRICE SHEET FOR PART NUMBER SUFFIX DESIGNATION FOR PACKAGE SIZE.

REV	DATE	BY	CHK	APR	DESCRIPTION	ECN
0	10/20/16	DFA	CLW	JHAC	INITIAL RELEASE	GAECN03848

PRODUCT SPEC	
PACKAGING SPEC	
PART NUMBER	QB-WEH1822
WORK INSTRUCTION	
INSPECTION INSTRUCTION NUMBER	
FMEA & CONTROL PLAN NUMBER	
TITLE	QUICK BUILD WIRE END HOLDER CUSTOMER DRAWING
ITEM REVISION NAME	14L203GS/04
DATASET FILE NAME	14L203GS_DC/04
MATERIAL:	ABS, RED
DRAWING NUMBER:	14L203GS_DC

UNLESS OTHERWISE SPECIFIED, DIMENSIONAL TOLERANCES ARE: IN [mm]

.X ± .1 [2.54] .XXX ± .005 [.127]
.XX ± .01 [.25] ANGLES ± 5 °

THIRD ANGLE PROJECTION

DRAWN BY	DATE	CHK	SCALE		SIZE
DFA	10/20/16	JHAC	NONE	SHT 1 OF 1	A

D10100DA/20