THIS COPY IS PROVIDED ON A RESTRICTED BASIS AND IS NOT TO BE USED IN ANY WAY DETRIMENTAL TO THE INTERESTS OF PANDUIT CORP.

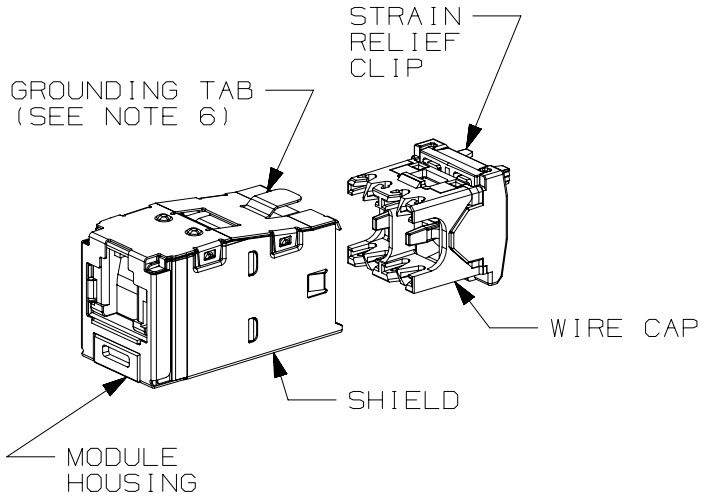


| PART# | COLOR | DESCRIPTION | WEIGHT* |
|---|---|---|---|
| CJSH5E88TG**Y<br>CJSH688TG**Y | BLACK<br>RED<br>BLUE<br>GREEN<br>VIOLET<br>YELLOW | 8 POSITION, 8 WIRE SHIELDED MODULE WITH INTEGRAL SHIELD. TERMINATION CAP IS COLOR CODED FOR T568A AND T568B WIRING SCHEMES. | 3.314 LB/100 PCS<br>(1503g/100 PCS) |

*WEIGHT IS APPROXIMATE
**JACK COLOR SUFFIX

NOTES:
1. RED WIRE CAP DESIGNATES CATEGORY 5E PERFORMANCE.
2. WHITE WIRE CAP DESIGNATES CATEGORY 6 PERFORMANCE.
3. MATERIAL:
   MODULE HOUSING- ABS
   SHIELD - TIN PLATED PHOS. BRONZE.
   WIRE CAP/CLIP -ZINC AND PC
4. ALL CATEGORY 5E & 6, 8 POSITION, 8 WIRE JACK MODULES ARE UNIVERSAL IN DESIGN. THEY ACCEPT SIX AND EIGHT POSITION MODULAR PLUGS WITHOUT DAMAGE.
5. DIMENSIONS IN PARENTHESES ARE IN METRIC.
6. .187 x .010" GROUNDING TAB PROVIDED AS OPTIONAL CONDUCTIVE PATH FOR GROUNDING.
7. ONLY THE 6 COLORS LISTED IN THE TABLE ARE AVAILABLE.
8. SHUTTER DOOR OPENS AND CLOSES AUTOMATICALLLY WITH PLUG INSERTION AND REMOVAL.
9. SHUTTER DOOR PREVENTS THE ACCUMULATION OF DUST PER IP-40 PROTECTION RATING STANDARDS.

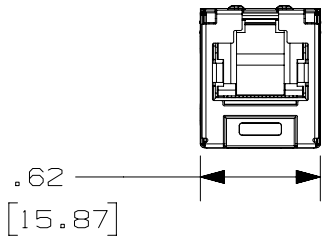


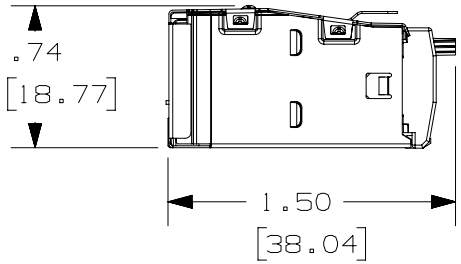


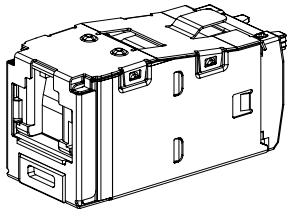

ACTUAL SIZE

| REV | DATE | BY | CHK | APR | DESCRIPTION | ECN |
|---|---|---|---|---|---|---|
| 2 | 2-16-17 | ROJC | NAGL | TMBA | B. MODEL REVISION UPDATED | 14M542AF-02 |
| 1 | 11-10-15 | BJN | ROJC | FMS | A. UPDATED DWG TO SHOW STRAIN RELIEF CLIP AS PART OF WIRE CAP | 14M542AF-02 |
| R | 5-29-15 | BJN | ROJC | FMS | RELEASED TO PRODUCTION | 14M542AF-02 |

PART NUMBER: SEE TABLE

TITLE: MINI-COM CAT5E & CAT6 STP SPRING SHUTTERED JACK MODULE

CUSTOMER DRAWING

ITEM REVISION NAME: 14M542AF/02

DATASET FILE NAME: 14M542AF_DC02/02A

PANDUIT

UNLESS OTHERWISE SPECIFIED, DIMENSIONAL TOLERANCES ARE: IN [mm]

.X ± .XXX ±
.XX ± ANGLES ±

THIRD ANGLE PROJECTION

MATERIAL: SEE NOTES

DRAWING NUMBER: 14M542AF-02

| DRAWN BY | DATE | CHK | SCALE | | SIZE |
|---|---|---|---|---|---|
| BJN | 5-29-15 | ROJC | FULL | SHT 1 OF 1 | A |

D10100DA/14