THIS COPY IS PROVIDED ON A RESTRICTED BASIS AND IS NOT TO BE USED IN ANY WAY DETRIMENTAL TO THE INTERESTS OF PANDUIT CORP.

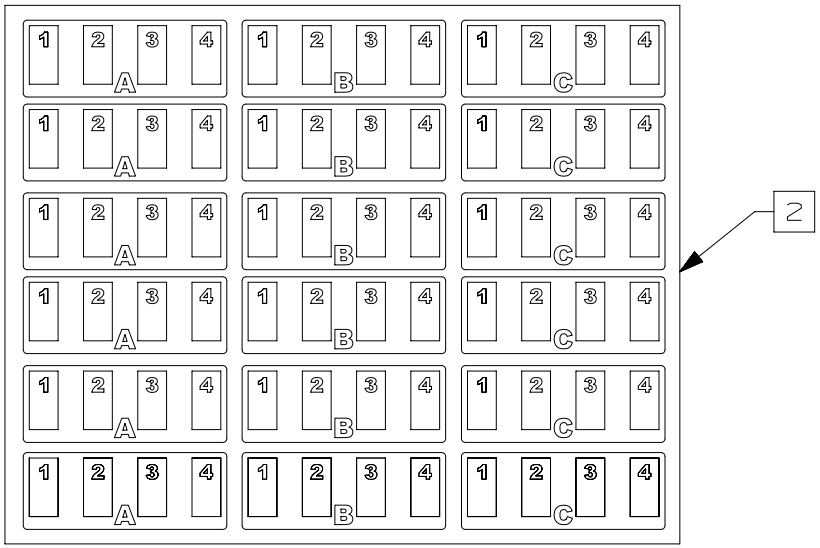

NOTES:
1. THE MODULAR RAIL KIT IS DESIGNED FOR THE HD FLEX ENCLOSURES P/N FAMILY FLEX*U**.
2. DIMENSIONS IN [ ] ARE METRIC.
3. WEIGHT: .85LBS (385.6g)
4. REFERENCE PANDUIT DOCUMENT FS127 FOR INSTALLATION INSTRUCTIONS.

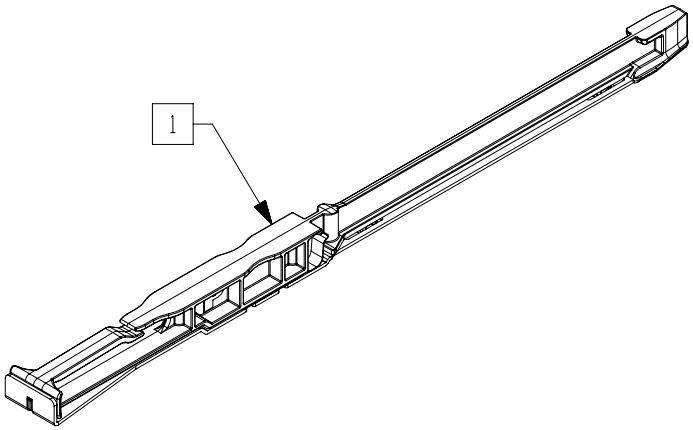

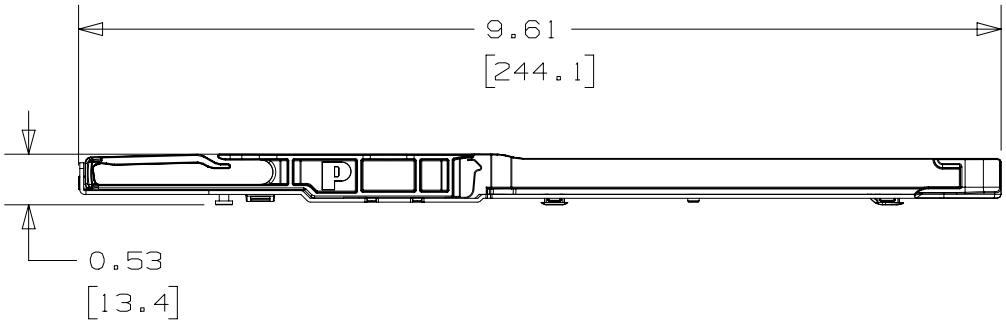

ITEM	DESCRIPTION	QTY.
1	RAIL ASSEMBLY (WHITE PLASTIC)	12
2	LABEL SHEET	1

REV	DATE	BY	CHK	APR	DESCRIPTION	ECN
00A	05-22-17	SAT	JDK	AW	RELEASED TO PRODUCTION	12F187LN-DC

TITLE
HD FLEX 4-PORT ENCLOSURE RAIL KIT, 1RU, 12 RAILS, 18 LABELS
CUSTOMER DRAWING

ITEM REVISION NAME: 12F187LN/02

DATASET FILE NAME: 12F187LN_DC/02A

UNLESS OTHERWISE SPECIFIED, DIMENSIONAL TOLERANCES ARE: IN [mm]
.X ± .XXX ± .010 [0.3]
.XX ± .03 [0.8] ANGLES ±
THIRD ANGLE PROJECTION

PANDUIT

PART NO. FLEX-RAIL04EN

DRAWING NUMBER: 12F187LN-DC

DRAWN BY	DATE	CHK	SCALE	SHT 1 OF 1	SIZE
SAT	05-09-17	JDK	1 : 4		A