THIS COPY IS PROVIDED ON A RESTRICTED BASIS AND IS NOT TO BE USED IN ANY WAY DETRIMENTAL TO THE INTERESTS OF PANDUIT CORP.

NOTES:
1. SEE CURRENT PRICE SHEET FOR PART NUMBER SUFFIX DESIGNATION FOR PACKAGE SIZE AND PRODUCT COLOR.
2. MOLDED MATERIAL: FR GLASS FILLED NYLON 6/6
   THUMB SCREW MATERIAL: BRASS
   THREADED INSERT MATERIAL: ALUMINUM
3. PRODUCT IS DESIGNED TO SUPPORT A MAXIMUM OF 4" (101.6) DIAMETER BUNDLE. MAXIMUM RECOMMENDED STATIC LOAD: 40 lbs (18.1kg).
4. PRODUCT IS DESIGNED FOR 4" EMT TUBING.

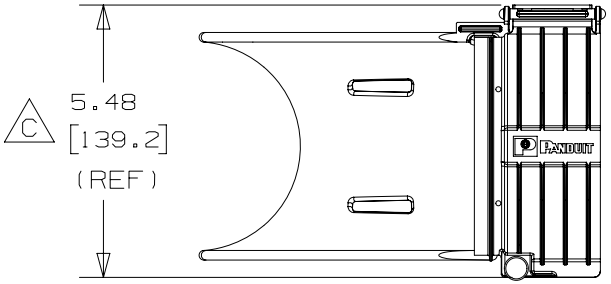

PANDUIT PART NO.	WEIGHT lbs (g) 1 pc
CWF400	0.53 (240)

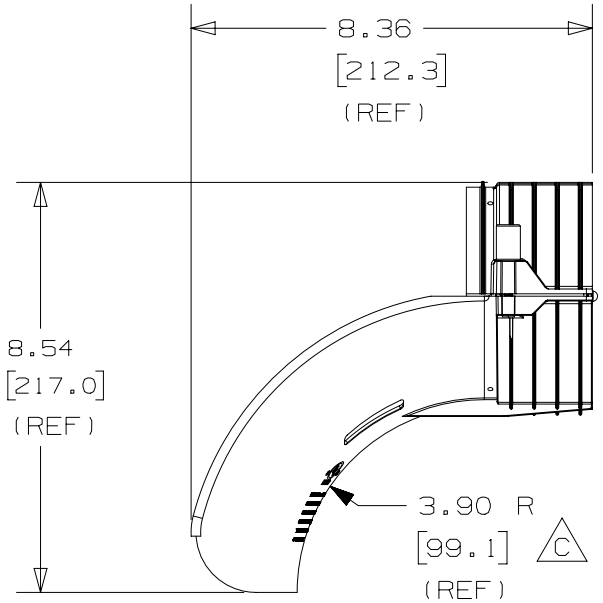

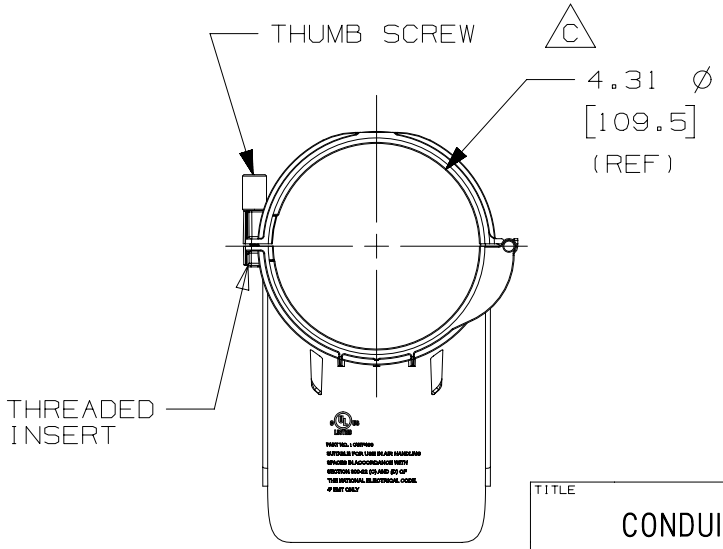

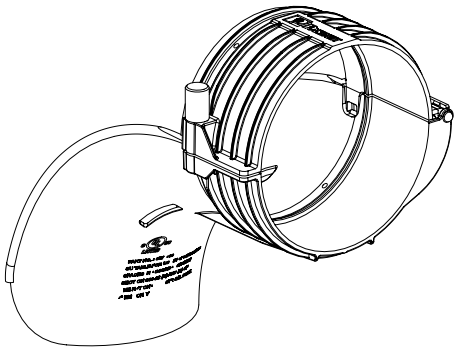

ISO VIEW
SCALE 1:4

TITLE
CONDUIT WATERFALL - 4" EMT COMPATIBLE (CWF400)
CUSTOMER DRAWING

ITEM REVISION NAME: G03597YA/02
DATASET FILE NAME: G03597YA_DC/01C (A)
MATERIAL: N/A
THIRD ANGLE PROJECTION
DRAWING NUMBER: GB3203CA-DC

DRAWN BY	DATE	CHK	SCALE	SIZE
JAD	1/9/07		NONE	A

SHT 1 OF 1

REV	DATE	BY	CHK	APR	DESCRIPTION	ECN
01C	2/20/19	MEX-JAGC	DWR	DWR	C. REVISED DIMENSIONS PER CPK REPORT	V09001MY/01
01B	11/17/17	MEX-JAGC	DWR	DWR	A. CADFILE NAME CHANGED B. NOTES UPDATED	V09001MY
R	1/9/07	JAD			INITIAL RELEASE	GB3203CA

D10100DA/20