THIS COPY IS PROVIDED ON A RESTRICTED BASIS AND IS NOT TO BE USED IN ANY WAY DETRIMENTAL TO THE INTERESTS OF PANDUIT CORP.

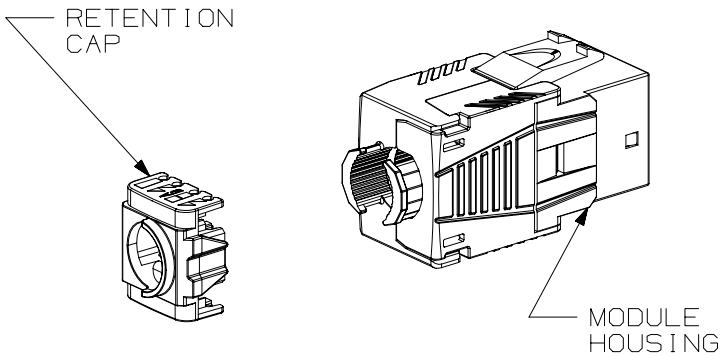

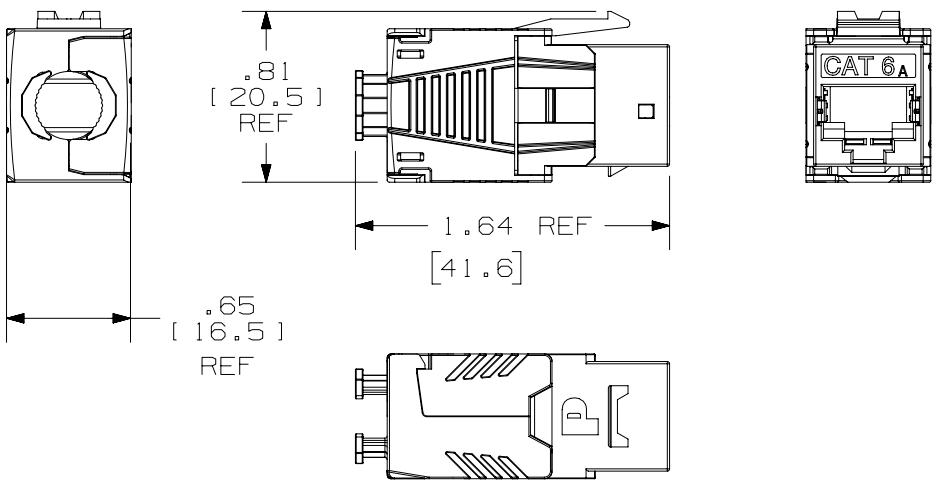

NOTES:

1. VISIT OUR ON-LINE CATALOG AT WWW.PANDUIT.COM FOR A LIST OF CURRENT PARTS APPLICABLE USE WITH THIS PRODUCT.
2. ALL CATEGORY 6A, RJ45, 10GB/S, 8-POSITION, 8-WIRE SHIELDED KEYSTONE JACK MODULES ARE UNIVERSAL IN DESIGN. THEY ACCEPT EIGHT POSITION MODULAR PLUGS WITHOUT DAMAGE.
3. TERMINATES 22-24 AWG SOLID OR STRANDED SHIELDED AND UN-SHIELDED CABLE IN A HORIZONTAL MANNER.
4. SEE INSTALLATION INSTRUCTIONS FOR PROPER TERMINATION METHOD.
5. CAP (TERMINATION BLOCK) IS CODED FOR T568A AND T568B WIRING MAPPING SCHEMES.
6. PART INCLUDES:
   A. MODULE HOUSING: DIECAST/PLATED, INTERNAL COMPONENTS MADE FROM VARIOUS MATERIALS.
   B. CAP (TERMINATION BLOCK): PLASTIC /WHITE IN COLOR W/ PAD PRINTED WIRE MAPPING SCHEMES.
   C. CABLE TIE: PLASTIC/NYLON/RAW COLOR (NOT SHOWN IN DRAWING FIGURES).
   D. COPPER FOIL TAPE: COPPER
7. WEIGHT: 6.67 LBS/100 PCS [3027 grams/100 PCS]
8. DIMENSIONS IN [ ] ARE METRIC.
9. ALL MATERIALS AND COMPONENTS USED MEET THE MATERIALS RESTRICTIONS OF RoHs (EUROPEAN DIRECTIVE 2011/65/EU ON THE RESTRICTION OF HAZARDOUS SUBSTANCES) AS PROPOSED BY THE RoHs TECHNICAL ADAPATION COMMITTEE.

PART NUMBER

KJS6X88TC

TITLE

CATEGORY 6A RJ45 10GB/S 8-POSITION 8-WIRE SHIELDED KEYSTONE JACK MODULE (CABLE RANGE 22-24 AWG)

CUSTOMER DRAWING

ITEM REVISION NAME: 00326EAA/02

DATASET FILE NAME: 00326EAA_DC/02A

THIRD ANGLE PROJECTION

MATERIAL: SEE NOTE 6

DRAWING NUMBER: 00326EAA-DC

DRAWN BY	DATE	CHK	SCALE	SHEET 1 OF 1	SIZE
BJN	09-14-18	DCS	FULL		A

REV	DATE	BY	CHK	APR	DESCRIPTION	ECN
02A	1-16-20	BJN	VJV	AMN	UPDATED	00326EAC-DC
01C	10-23-18	BJN	DCS	RWI	UPDATED	0326EAA-DC

A-SIZE CUSTOMER