THIS COPY IS PROVIDED ON A RESTRICTED BASIS AND IS NOT TO BE USED IN ANY WAY DETRIMENTAL TO THE INTERESTS OF PANDUIT CORP.

NOTES:

1. MATERIAL: BUSBAR MADE FROM HIGH CONDUCTIVITY COPPER, NON-PLATED
2. KIT COMES FULLY ASSEMBLED.
3. KIT INCLUDES BUSBAR, MOUNTING BRACKETS, INSULATORS, AND MOUNTING HARDWARE.
4. DIMENSIONS IN PARENTHESIS ARE MILLIMETERS.

c UL us LISTED

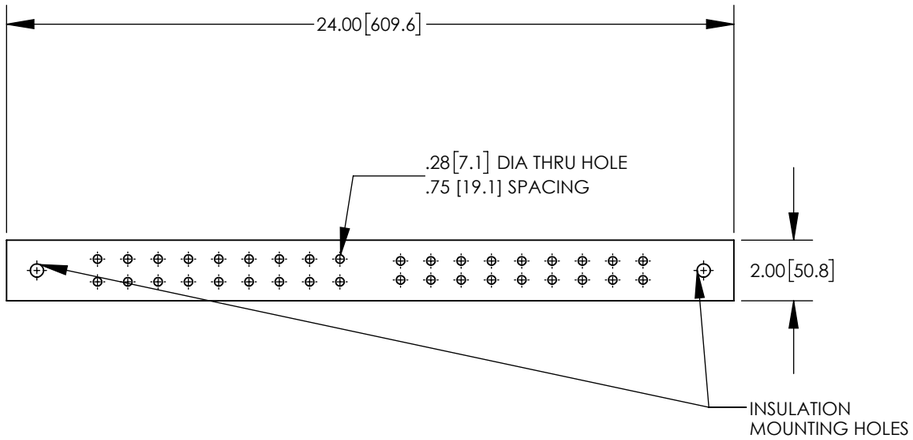

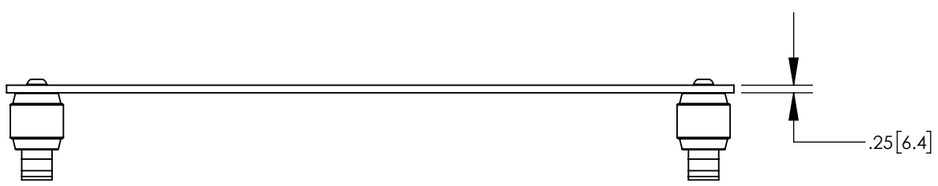

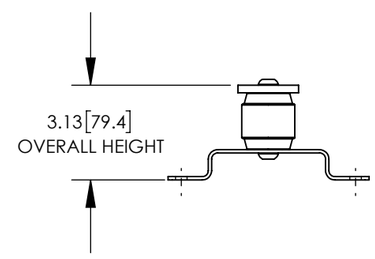

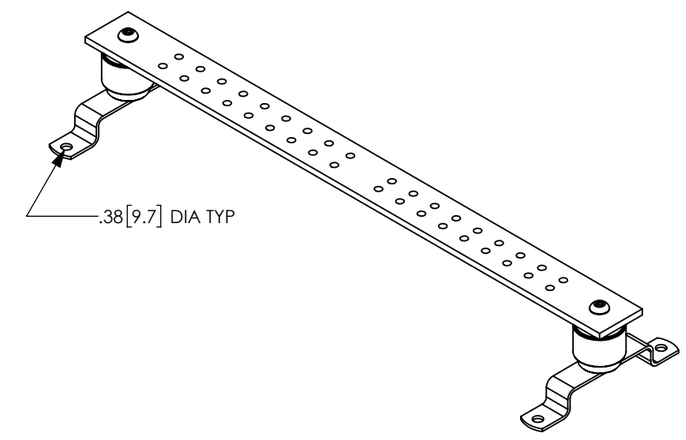

REV	DATE	BY	CHK	APR	DESCRIPTION	ECN
00	8/17	JHNU	JHNU	RGB	DRAWING RELEASED	00049EBA-DC

TITLE
GROUNDING BUSBAR (GB2A18I)
CUSTOMER DRAWING

ITEM REVISION NAME: 00049EBA/00

DATASET FILE NAME: 00049EBA-DC/00.SLDDRW

PANDUIT

UNLESS OTHERWISE SPECIFIED, DIMENSIONAL TOLERANCES ARE: IN [mm]
.X ± .XXX ±
.XX ± ANGLES ±
THIRD ANGLE PROJECTION

MATERIAL: SEE NOTES

DRAWING NUMBER: 00049EBA-DC

DRAWN BY	DATE	CHK	SCALE	SHEET	SIZE
JHNU	8/17	RGB	N/A	SHEET 1 OF 1	B