THIS COPY IS PROVIDED ON A RESTRICTED BASIS AND IS NOT TO BE USED IN ANY WAY DETRIMENTAL TO THE INTERESTS OF PANDUIT CORP.

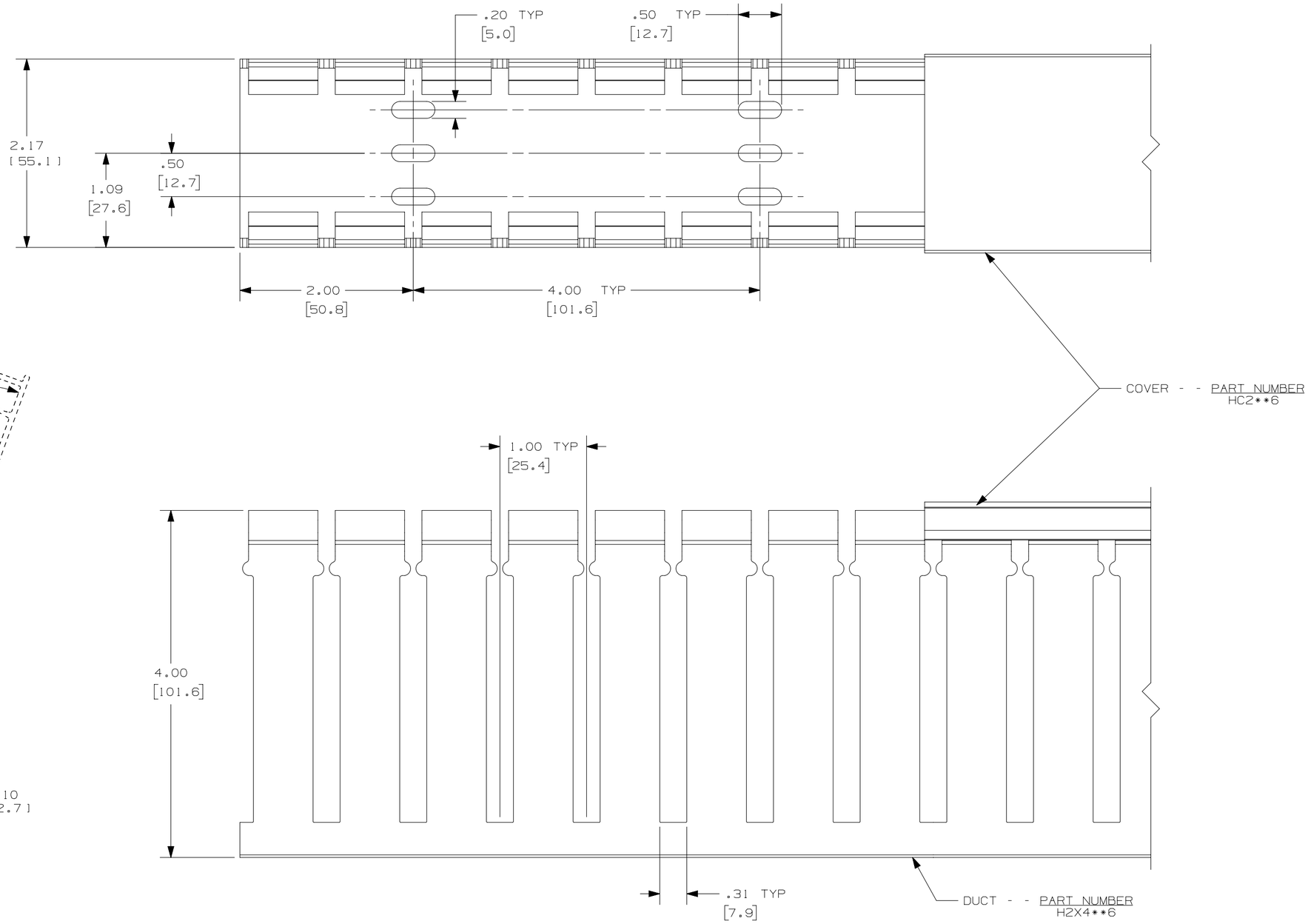

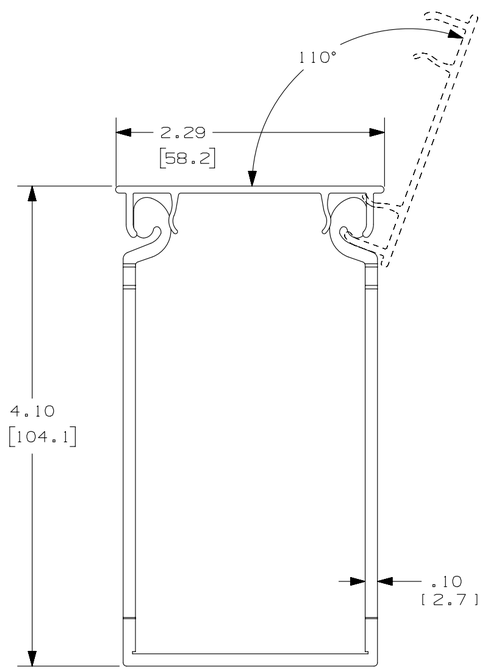

NOTES:

1. ALL DIMENSIONS ARE REFERENCE ONLY.
2. DIMENSIONS IN PARENTHESIS ARE METRIC.
3. THE ** DENOTE COLOR.
4. DUCT AND COVER ARE AVAILABLE IN 6 FT [1828.8] LENGTH.

REV	DATE	BY	CHK	APR	DESCRIPTION	ECN
3	03-05-13	JBN	RTFI	RTFI	F. UPDATED DRAWING BORDER & TITLE BLOCK	36897-1025

TITLE
WIRING DUCT - TYPE H DUCT WITH COVER
2 X 4
MARKETING DRAWING

ITEM REVISION NAME: D110000Q/00

DATASET FILE NAME: D110000Q_DC/00D

PANDUIT

UNLESS OTHERWISE SPECIFIED, DIMENSIONAL TOLERANCES ARE: IN [mm]
.X ± .XXX ±
.XX ± ANGLES ±
THIRD ANGLE PROJECTION

MATERIAL: PVC

DRAWING NUMBER: 36897-1025

DRAWN BY	DATE	CHK	SCALE		SIZE
JCST	07-30-04	MKBE	FULL	SHT 1 OF 1	C

D101000C/12