THIS COPY IS PROVIDED ON A RESTRICTED BASIS AND IS NOT TO BE USED IN ANY WAY DETRIMENTAL TO THE INTERESTS OF PANDUIT CORP.

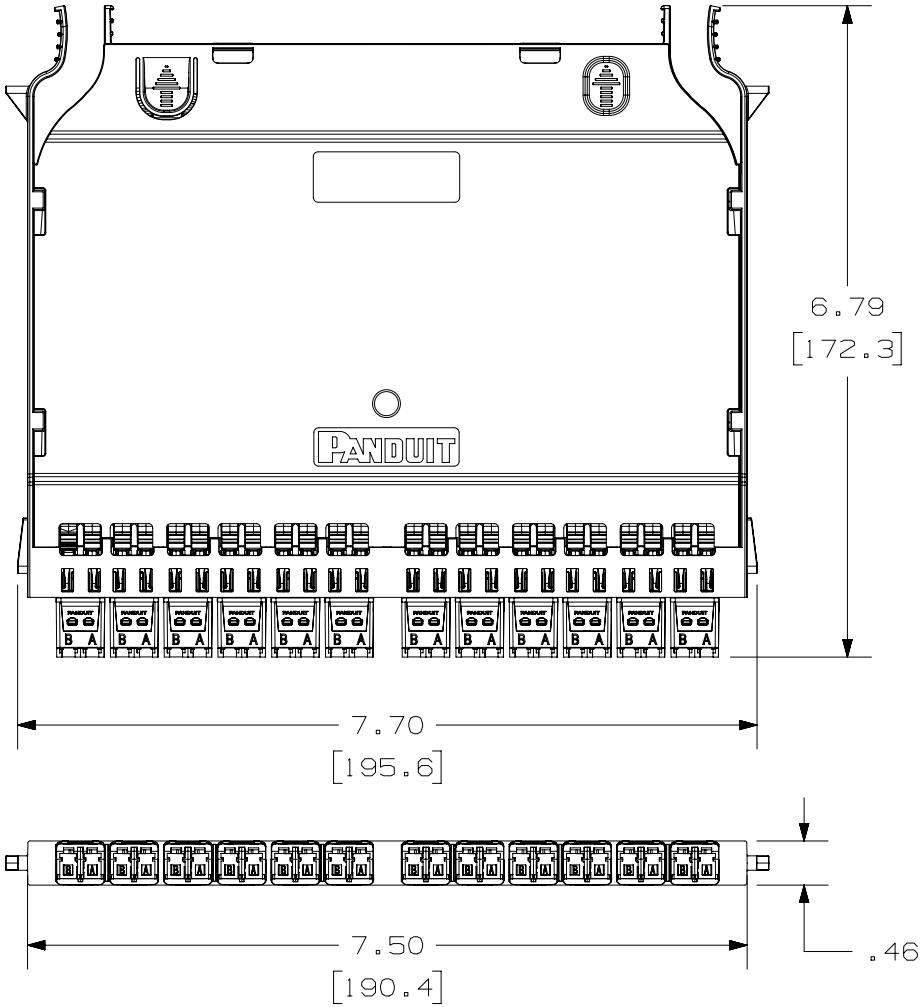

NOTES:
1. PART NUMBERS: SEE SHEET 2 FOR ALL PART NUMBERS.
2. CASSETTE WIRING COMPLIES WITH ANSI/TIA-568-C.0 SEE ANSI/TIA-568-C.0 FOR POLARITY DETAILS AND AN EXAMPLE OF A BASIC LINK.
3. CASSETTE WEIGHT: 6oz (170g)
4. MAX CABLE DIAMETER IS .291 [7.4].

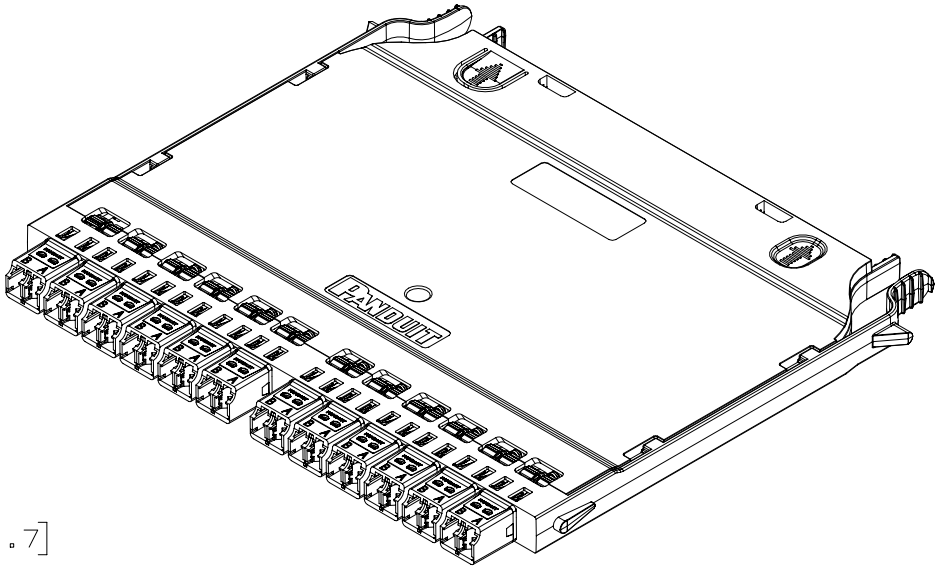

REV	DATE	BY	CHK	APR	DESCRIPTION	ECN
00A	09-28-20	SAT	BONS	EJH	RELEASED TO PRODUCTION	00306EAB-DC

TITLE
HD FLEX 24 FIBER LC SPLICE CASSETTE
CUSTOMER DRAWING

ITEM REVISION NAME: 00306EAB/00

DATASET FILE NAME: 00306EAB_DC/00A

UNLESS OTHERWISE SPECIFIED, DIMENSIONAL TOLERANCES ARE: IN [mm]
.X ± .1 [2.54] .XXX ± .005 [.127]
.XX ± .01 [.25] ANGLES ± 5 °
THIRD ANGLE PROJECTION

MATERIAL:

DRAWING NUMBER: 00306EAB-DC

DRAWN BY	DATE	CHK	SCALE		SIZE
SAT	03-11-20	BONS	NONE	SHT 1 OF 2	A

THIS COPY IS PROVIDED ON A RESTRICTED BASIS AND IS NOT TO BE USED IN ANY WAY DETRIMENTAL TO THE INTERESTS OF PANDUIT CORP.

CASSETTE SPECIFIC COMONENTS		
PRODUCT FAMILY	CASSETTE PART NUMBER	CASSETTE DESCRIPTION
24 FIBER LC SPLICE CASSETTE - PRELOADED WITH DISCRETE PIGTAILS	FHSZA-24-10P	24F OM4 LC DISCRETE PIGTAILS; ULTRA IL
	FHS9N-24-10P	24F OS2 LC DISCRETE PIGTAILS; STANDARD IL
	FHS9N-24-LAP	24F OS2 LC/APC DISCRETE PIGTAILS; STANDARD IL
24 FIBER LC SPLICE CASSETTE - PRELOADED WITH RIBBON PIGTAIL	FHSZA-24-10R	24F OM4 LC RIBBONIZED PIGTAIL; ULTRA IL
	FHS9N-24-10R	24F OS2 LC RIBBONIZED PIGTAIL; STANDARD IL
	FHS9N-24-LAR	24F OS2 LC/APC RIBBONIZED PIGTAILS; STANDARD IL

REV	DATE	BY	CHK	APR	DESCRIPTION	ECN
					SEE SHEET 1 FOR REVISIONS.	

TITLE

HD FLEX 24 FIBER LC SPLICE CASSETTE

CUSTOMER DRAWING

ITEM REVISION NAME: 00306EAB/00

DATASET FILE NAME: 00306EAB_DC/00A

UNLESS OTHERWISE SPECIFIED, DIMENSIONAL TOLERANCES ARE: IN [mm]

.X ± .1 [2.54] .XXX ± .005 [.127]

.XX ± .01 [.25] ANGLES ± 5 °

THIRD ANGLE PROJECTION

MATERIAL:

DRAWING NUMBER: 00306EAB-DC

DRAWN BY	DATE	CHK	SCALE		SIZE
SAT	03-11-20	BONS	NONE	SHT 2 OF 2	A