THIS COPY IS PROVIDED ON A RESTRICTED BASIS AND IS NOT TO BE USED IN ANY WAY DETRIMENTAL TO THE INTERESTS OF PANDUIT CORP.

PANDUIT P/N	WEIGHT
FWMHSS-CG1321	.07 LBS EACH (33.5g EACH)

NOTES:
1. SEE CURRENT CATALOG FOR COMPLETE LIST OF PARTS APPLICABLE FOR USE WITH THIS PRODUCT.
2. DIMENSIONS IN PARENTHESES ARE METRIC.
3. MATERIAL: PLASTIC
4. SUGGESTED MOUNTING CLEARANCE HOLE DIAMETER: 1.25 [32].
5. ALL MATERIALS AND COMPONENTS USED MEET THE MATERIAL RESTRICTIONS OF RoHS, (EUROPEAN DIRECTIVE 2011/65/EC ON THE RESTRICTIONS OF HAZARDOUS SUBSTANCES) AS PROPOSED BY THE RoHS TECHNICAL ADAPTATION COMMITEE.

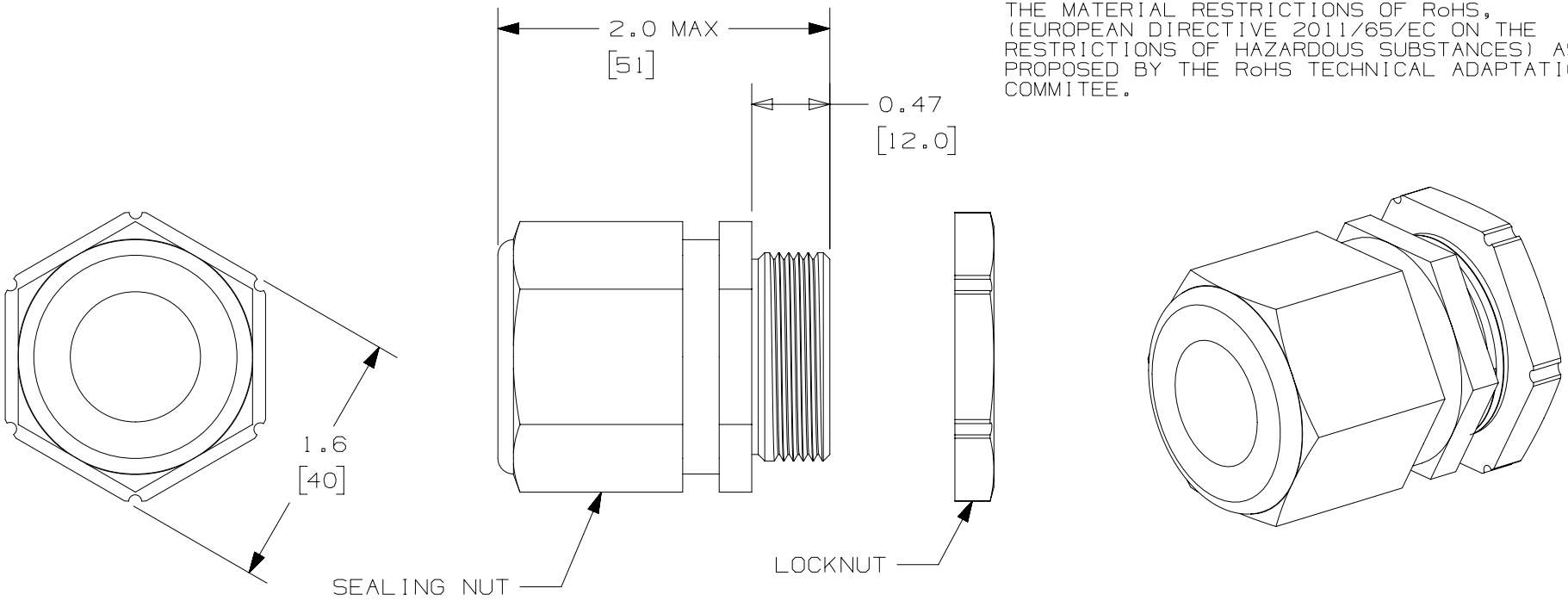

REV	DATE	BY	CHK	APR	DESCRIPTION	ECN
00A	12-03-19	SAT	BONS	AW	INITIAL RELEASE	00174EWG-DC

TITLE
CABLE GLAND 13mm - 21mm
CUSTOMER DRAWING

ITEM REVISION NAME: 00174EWG/00

DATASET FILE NAME: 00174EWG_DC/00A

UNLESS OTHERWISE SPECIFIED, DIMENSIONAL TOLERANCES ARE: IN [mm]
.X ± .XXX ± .010 [0.3]
.XX ± .03 [0.8] ANGLES ±
THIRD ANGLE PROJECTION

PART NO.: SEE TABLE

DRAWING NUMBER: 00174EWG-DC

DRAWN BY	DATE	CHK	SCALE	SHT 1 OF 1	SIZE
SAT	11-25-19	BONS	1:1		A