THIS COPY IS PROVIDED ON A RESTRICTED BASIS AND IS NOT TO BE USED IN ANY WAY DETRIMENTAL TO THE INTERESTS OF PANDUIT CORP.

PANDUIT PART NUMBER	WIRE SIZE mm²	WIRE STRIP LENGTH	STUD HOLE	A ±3.0	B MIN.	I.D. ±0.50	O.D. ±0.50	G ±2.25	P MIN.	C REF.	T ±0.7	W ±2.25	PANDUIT DIE COLOR CODE PANDUIT DIE INDEX NUMBER (COMPETITOR DIE NUMBER)
LAAM38U-M8-70	38	35.4	M8	66.8	25.4	7.80	13.49	11.2	28.4	17.3	4.3	20.07	PINK DIE P42 (348)
LAAM38U-M10-70	38	35.4	M10	66.8	25.4	7.80	13.49	11.2	28.4	17.3	4.3	20.07	PINK DIE P42 (348)
LAAM58-M8-L	58	41.8	M8	81.8	31.8	10.01	16.26	16.0	31.8	15.7	5.8	22.4	TAN DIE P50
LAAM60B-M8-L	60	41.8	M8	81.8	31.8	10.01	16.26	16.0	31.8	15.7	5.8	22.35	TAN DIE P50 (296)
LAAM60B-M10-L	60	41.8	M10	81.8	31.8	10.01	16.26	16.0	31.8	15.7	5.8	22.35	TAN DIE P50 (296)
LAAM100U-M10-30	100	48.1	M10	90.4	38.1	13.92	22.23	16.0	33.3	17.3	7.9	30.2	WHITE DIE P66 (298)
LAAM150U-M12-X	150	67.2	M12	101.6	57.2	16.51	25.65	16.0	33.3	17.3	8.6	35.1	BLUE DIE P76 (470)
LAAM200B-M12-15	200	67.2	M12	108.7	57.2	18.31	28.19	16.0	33.3	17.3	9.7	38.4	BROWN DIE P87 (299)
LAAM250U-M16-6	250	86.2	M16	139.7	76.2	21.34	33.53	16.0	38.1	22.1	11.4	44.2	PINK DIE P99 (300)
LAAM325U-M16-5	325	86.2	M16	137.9	76.2	23.37	36.58	16.0	38.1	22.1	12.7	43.9	BLACK DIE P106 (473)
LAAM400B-M16-E	400	95.9	M16	165.1	85.9	26.19	37.7	22.4	47.8	25.4	13.2	44.2	YELLOW DIE 936 (SEE NOTE 6)

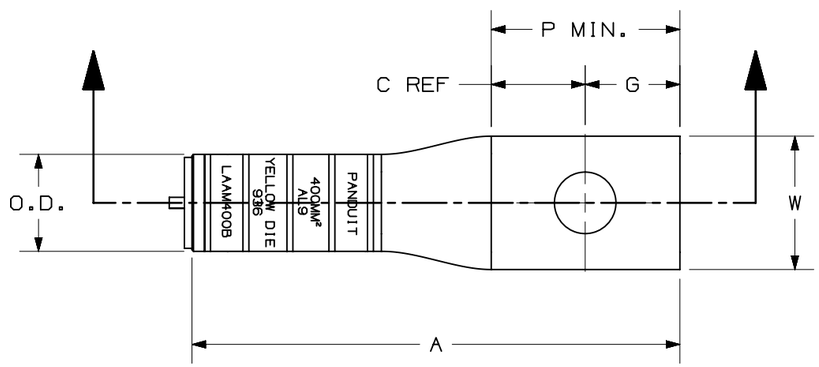

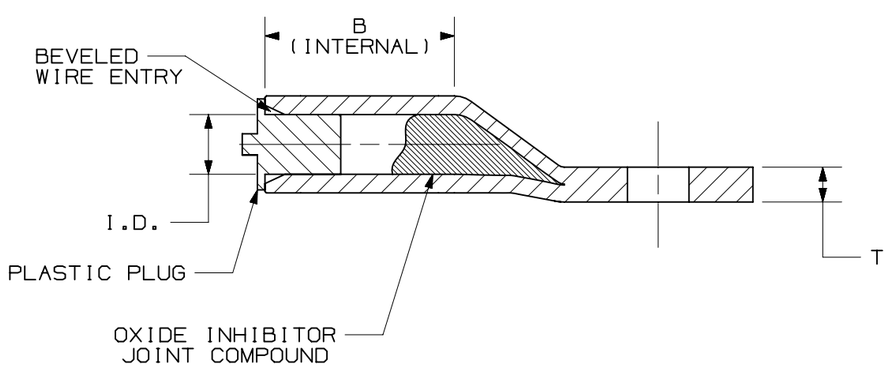

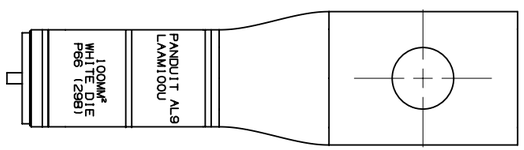

MARKING BAND LAYOUT - 2 BANDS
LAAM38U, LAAM58, LAAM60B, LAAM100U, LAAM150U, LAAM200B

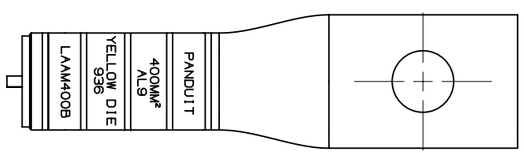

MARKING BAND LAYOUT - 4 BANDS
LAAM250U, LAAM325U, LAAM400B

NOTES:

1. MATERIAL: SEAMLESS ALUMINUM TUBING, TIN PLATED
2. BARREL COLOR CODED WITH DIE SET INDEX NUMBER
3. FOR COMPACTED METRIC STRANDED ALUMINUM WIRE
4. DIMENSIONS ARE IN MILLIMETERS
5. ALL PARTS MEET JIS C 2801 REQUIREMENTS
6. COMPETITOR DIE INDEX NUMBER ONLY
7. SEE 1007738 INSTALLATION INSTRUCTIONS FOR FURTHER TOOL AND DIE INFORMATION.

REV	DATE	BY	CHK	APR	DESCRIPTION	ECN
01A	2-8-24	JHNU	ALP	MRWA	E. ADDED LAAM38U-M8-70, LAAM60B-M8-L D. ADDED PANDUIT DIE NUMBERS FOR LAAM38U, LAAM60B, LAAM200B C. ADDED NOTE 7 B. ADDED MARKING BANDS TO VIEW A. CONVERTED TO NX	134227

PART NUMBER: SEE TABLE

TITLE: LAAM SERIES METRIC ALUMINUM TUBULAR LUGS

CUSTOMER DRAWING

ITEM REVISION NAME: 01090EBG/01

DATASET FILE NAME: 01090EBG-DC/01A

THIRD ANGLE PROJECTION

MATERIAL: SEE NOTES

DRAWING NUMBER: 01090EBG-DC

DRAWN BY	DATE	CHK	SCALE	SHEET	SIZE
JHNU	4-14-23	ALP	NONE	SHEET 1 OF 1	B

B-SIZE CUSTOMER