THIS COPY IS PROVIDED ON A RESTRICTED BASIS AND IS NOT TO BE USED IN ANY WAY DETRIMENTAL TO THE INTERESTS OF PANDUIT CORP.

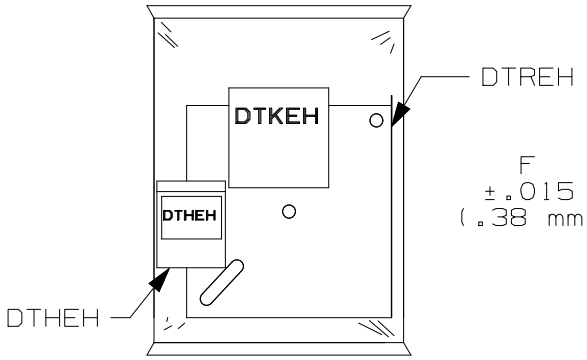

THE DTKEH KIT CONTAINS:

QTY	PART
1	DTHEH 25 HEADS
1	DTREH 50' REEL OF STRAPPING

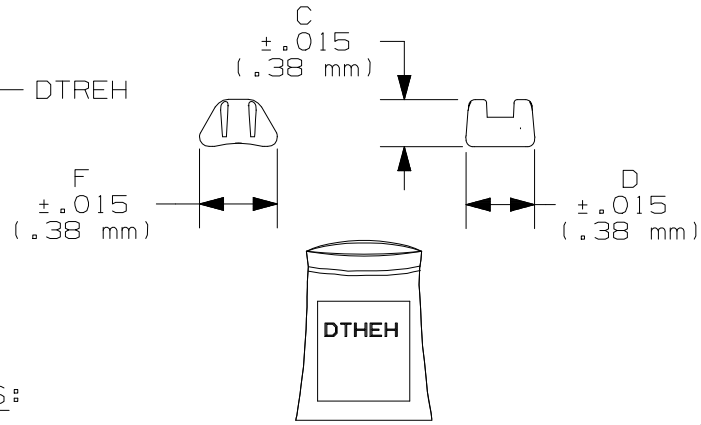

RECLOSABLE BAG OF 25 HEADS

DTHEH

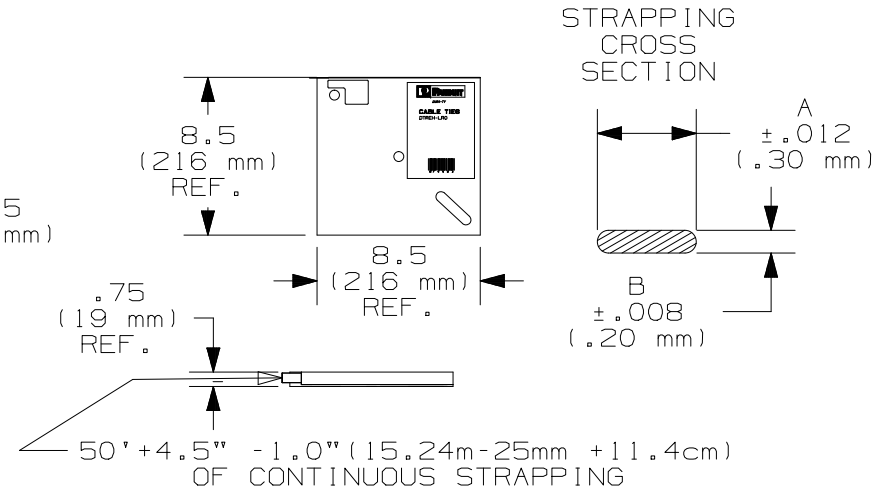

DTREH

PANDUIT* PART No.	DESCRIPTION	BUNDLE DIA. MIN. in. (mm)	BUNDLE DIA. MAX. in. (mm)	A in. (mm)	B in. (mm)	C in. (mm)	D in. (mm)	F in. (mm)	LOOP TENSILE STRENGTH 2"/MIN. lbs. (N)	APPROX. WEIGHT lbs/(kg) per PACKAGE
DTKEH	DURA-TY KIT 50' STRAPPING 25 HEADS	.020 (.51)	15'-9" (4.8)	.495 (12.57)	.059 (1.50)	.490 (12.45)	.718 (18.24)	.812 (20.62)	250 (1112)	1.2 (.544)
DTHEH	BAG OF 25 HEADS	------ ------	------ ------	------ ------	------ ------	.490 (12.45)	.718 (18.24)	.812 (20.62)	-------- --------	.2 (.091)
DTREH	50' REEL OF STRAPPING	.020 (.51)	15'-9" (4.8)	.495 (12.57)	.059 (1.50)	------ ------	------ ------	------ ------	250 (1112)	1 (.454)

* SEE CURRENT PRICE SHEET FOR PART NUMBER SUFFIX DESIGNATION FOR PACKAGE SIZE

DURA-TY CABLE TIES MEET OR EXCEED THE REQUIREMENTS OF TR-TSY-000789, TELCORDIA TECHNOLOGIES.

DIMENSIONS IN PARENTHESES ARE IN METRIC UNITS

DURA-TY EXTRUDED CABLE TIES (EXTRA HEAVY)

CUSTOMER DRAWING

REV	DATE	BY	CHK	APR	DESCRIPTION	ECN
03A	1.17.25	BWG	MPH	DJSL	A. REVISED LOOP TENSILE TEXT AND B. TITLE BORDER.	010172/00
2	5.13.08	ERW			A.CHANGED DIMENSION 'A' FOR DTKEH & DTREH FROM .500 TO .495. B. CHANGED DIMENSION 'A' TOLERANCE FROM ±.008 TO ±.012	SS-27250/02
1	8/31/07	JABO	TGS	TGS	CHANGED PACKAGE VIEW TO MATCH PKG-387 DWG. REVISED DIMS 'A' AND "C" METRIC CONVERSIONS	SS-27250/01

ITEM REVISION NAME: W10001BR/03

DATASET FILE NAME: W10001BR_DC r03A

UNLESS OTHERWISE SPECIFIED, DIMENSIONAL TOLERANCES ARE: IN [mm]

.X ± .XXX ±

.XX ±

THIRD ANGLE PROJECTION

PANDUIT

MATERIAL: STRAP & HEAD - BLACK ACETAL EACH HEAD HAS TWO, TYPE 302 STAINLESS STEEL BARBS

DRAWING NUMBER: SS-27250

DRAWN BY	DATE	CHK	SCALE		SIZE
JABO	12.10.02	TGS	N/A	SHT 2 OF 2	A

D10100DA/21