THIS COPY IS PROVIDED ON A RESTRICTED BASIS AND IS NOT TO BE USED IN ANY WAY DETRIMENTAL TO THE INTERESTS OF PANDUIT CORP.

NOTES:
1. SEE CURRENT CATALOG FOR PART NUMBER SUFFIXES TO INDICATE COLOR AND/OR PACKAGE QUANTITIES.
2. SEE CATALOG FOR COMPLETE LIST OF PARTS APPLICABLE FOR USE WITH THIS PRODUCT.
3. PART NUMBERS:SEE SHEET 2
4. MATERIALS:
   A. BOX AND LID: PLASTIC
   B. ADAPTER: COMPOSITE PLASTIC
5. CASSETTE WEIGHT: 1.98oz [56g]
6. DIMENSIONS IN BRACKETS ARE METRIC.

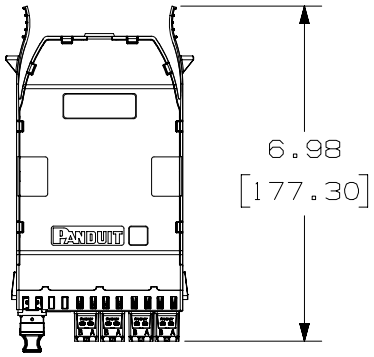

MPO FIBER POSITION
12 11 10 9 8 7 6 5 4 3 2 1

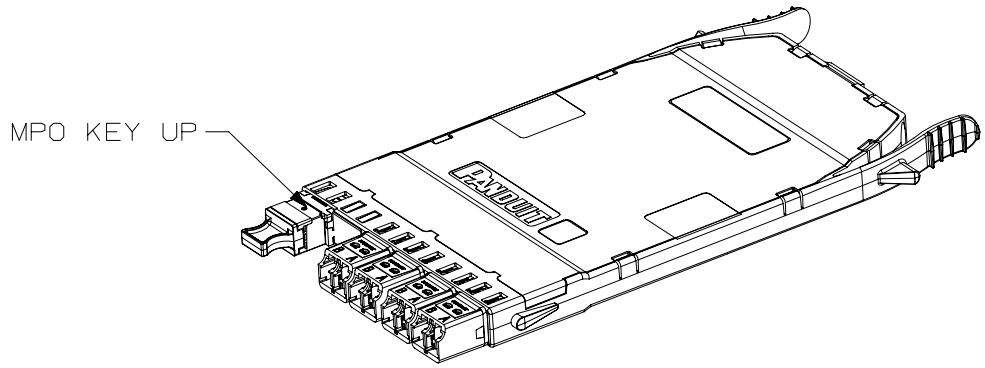

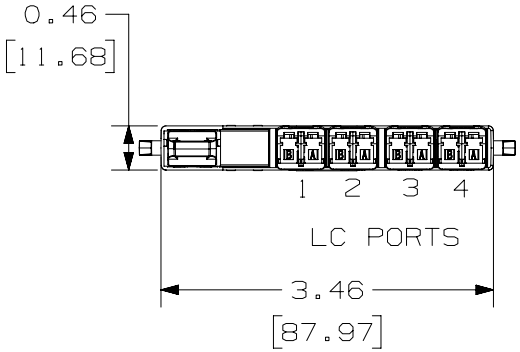

REV	DATE	BY	CHK	APR	DESCRIPTION	ECN
00A	09-10-24	SAT	ACBR	EJH	INITIAL RELEASE	01388EAA-DC

TITLE
HD FLEX FRONT ACCESS 4-TO-1 BREAKOUT CASSETTE
CUSTOMER DRAWING

ITEM REVISION NAME: 01388EAA/00

DATASET FILE NAME: 01388EAA_DC/00A

ALL DIMENSIONS ARE FOR REFERENCE

THIRD ANGLE PROJECTION

MATERIAL: SEE NOTES

DRAWING NUMBER: 01388EAA-DC

DRAWN BY	DATE	CHK	SCALE	SHT 1 OF 2	SIZE
SAT	09-10-24	ACBR	NONE		A

THIS COPY IS PROVIDED ON A RESTRICTED BASIS AND IS NOT TO BE USED IN ANY WAY DETRIMENTAL TO THE INTERESTS OF PANDUIT CORP.

HD FLEX FRONT ACCESS 4-TO-1 BREAKOUT CASSETTE		
PART NO.	DESCRIPTION	POLARITY
FHCFSA-08-10U2	OM4+ SIGNATURE CORE ULTRA IL - BLACK MPO - KEY UP KEY DOWN	U2
FHCFZA-08-10U2	OM4 ULTRA IL - BLACK MPO - KEY UP KEY DOWN	U2
FHCFZO-08-10U2	OM4 OPTIMIZED IL - BLACK MPO - KEY UP KEY DOWN	U2
FHCF9N-08-10U2	OS2 STANDARD IL - BLACK MPO - KEY UP KEY DOWN	U2
FHCF9O-08-10U2	OS2 OPTIMIZED IL - BLACK MPO - KEY UP KEY DOWN	U2
FHCFSA-08-10U	OM4+ SIGNATURE CORE ULTRA IL - BLACK MPO - KEY UP KEY DOWN	U
FHCFZA-08-10U	OM4 ULTRA IL - BLACK MPO - KEY UP KEY DOWN	U
FHCFZO-08-10U	OM4 OPTIMIZED IL - BLACK MPO - KEY UP KEY DOWN	U
FHCF9N-08-10U	OS2 STANDARD IL - BLACK MPO - KEY UP KEY DOWN	U
FHCF9O-08-10U	OS2 OPTIMIZED IL - BLACK MPO - KEY UP KEY DOWN	U

FIBER POSITION FROM LC END TO MPO END								
8 FIBER - UNIVERSAL 2 - (U2)								
LC PORT NUMBER	1		2		3		4	
	B	A	B	A	B	A	B	A
MPO FIBER POSITION	12	1	11	2	10	3	9	4

8 FIBER - UNIVERSAL - (U)								
LC PORT NUMBER	1		2		3		4	
	B	A	B	A	B	A	B	A
MPO FIBER POSITION	1	12	2	11	3	10	4	9

REV	DATE	BY	CHK	APR	DESCRIPTION	ECN
					SEE SHEET 1 FOR REVISION HISTORY	

TITLE

HD FLEX FRONT ACCESS 4-TO-1 BREAKOUT CASSETTE

CUSTOMER DRAWING

ITEM REVISION NAME: 01388EAA/00

DATASET FILE NAME: 01388EAA_DC/00A

ALL DIMENSIONS ARE FOR REFERENCE

THIRD ANGLE PROJECTION

MATERIAL: SEE NOTES SHEET 1

DRAWING NUMBER: 01388EAA-DC

DRAWN BY	DATE	CHK	SCALE		SIZE
SAT	09-10-24	ACBR	NONE	SHT 2 OF 2	A