THIS COPY IS PROVIDED ON A RESTRICTED BASIS AND IS NOT TO BE USED IN ANY WAY DETRIMENTAL TO THE INTERESTS OF PANDUIT CORP.

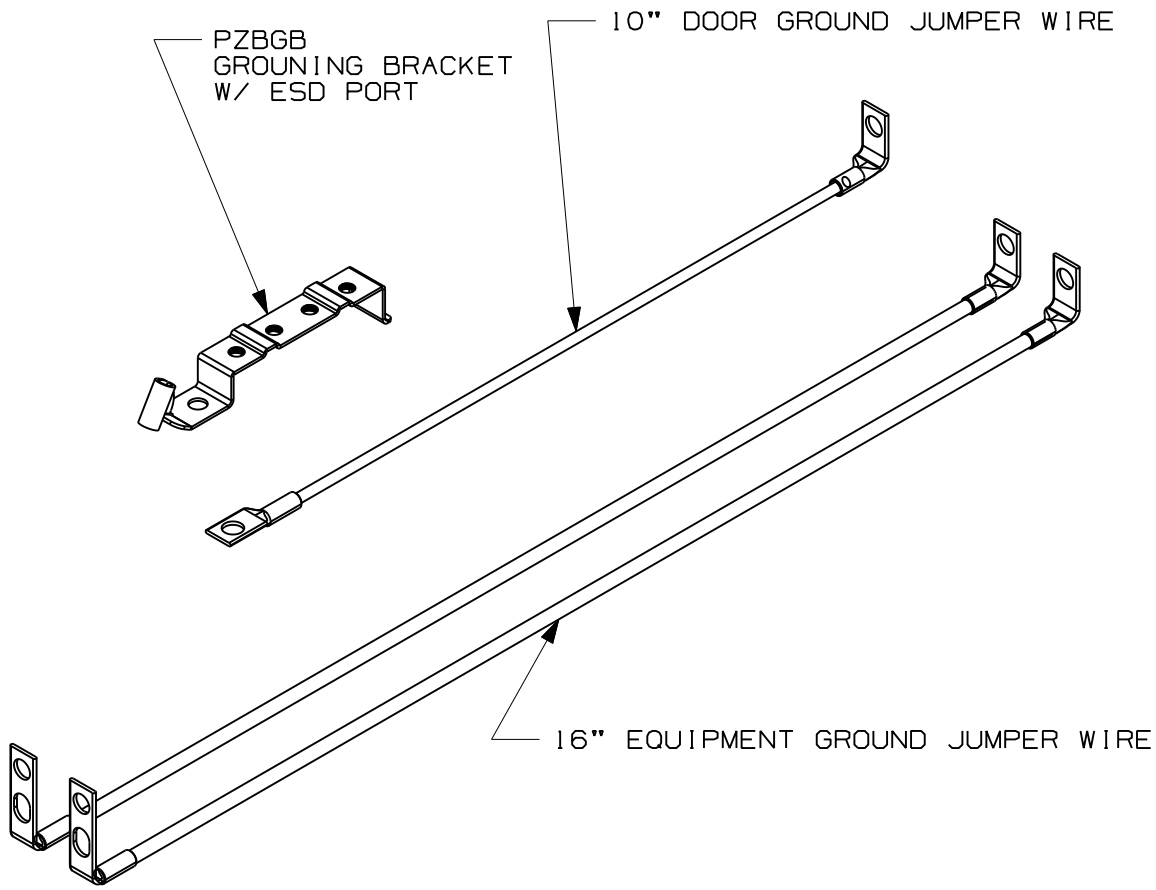

PANDUIT PART NO.	WEIGHT
PZICGK	1.3 LB/EACH 590 g/EACH

1. VISIT OUR ONLINE CATALOG AT WWW.PANDUIT.COM FOR A CURRENT LIST OF PRODUCTS APPLICABLE FOR USE WITH PART.
2. PART INCLUDES:
   - (1) 10" DOOR GROUND JUMPER WIRE
   - (2) 16" EQUIPMENT GROUND JUMPER WIRE
   - (1) PZBGB, GROUNDING BRACKET W/ ESD PORT
   - (2) #10-32 BONDING STUD
   - (2) #10-32 BONDING NUTS
   - (1) #10 SPLIT LOCK WASHER
   - (1) #10-32 NEX NUT
   - (3) #12-24 HEX WASHER HEAD MACHINE SCREW
   - (1) #10-32 THREAD FORMING SCREW
   - (1) EXTERNAL TOOTH LOCKWASHER

REV	DATE	BY	CHK	DESCRIPTION	ECN - R	CUST	SUP	OTH
00A	8-5-08	RYB		RELEASED TO PRODUCTION	V10447EX			

MODEL FILENAME: V10447EX_PZICGK_00.prt

CAD FILENAME/LAYERS: V10447EX_DC/00A.prt

PANDUIT CORP. TINLEY PARK, ILLINOIS

IN-CEILING ENCLOSURE GROUNDING KIT (PZICGK) CUSTOMER DRAWING

UNLESS OTHERWISE SPECIFIED, DIMENSIONAL TOLERANCES ARE:

INCHES		[METRIC - MILLIMETER]		ANGLE
X.X	+/- 0.03	X.	+/- 0.8	+/- 1°
X.XX	+/- 0.015	X.X	+/- 0.4	
X.XXX	+/- 0.005	X.XX	+/- 0.13	

UNLESS OTHERWISE SPECIFIED, ALL DIMENSIONS ARE GIVEN IN INCHES, THIRD ANGLE PROJECTION.

DRAWN BY: RYB

DATE: 8/5/08

CHK'D:

MAT'L: SEE NOTES

SCALE: NONE

DRAWING NO.: V10447EX

DWG SIZE: A