THIS COPY IS PROVIDED ON A RESTRICTED BASIS AND IS NOT TO BE USED IN ANY WAY DETRIMENTAL TO THE INTERESTS OF PANDUIT CORP.

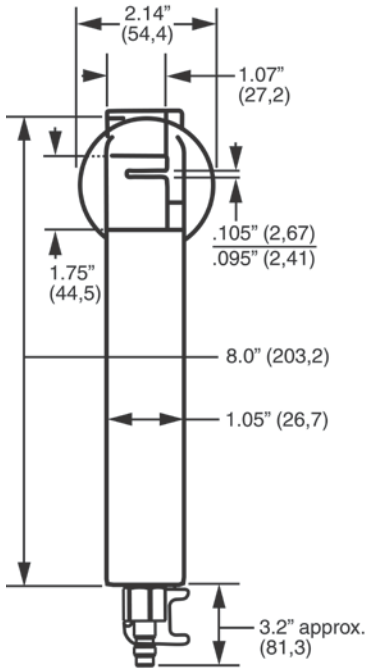

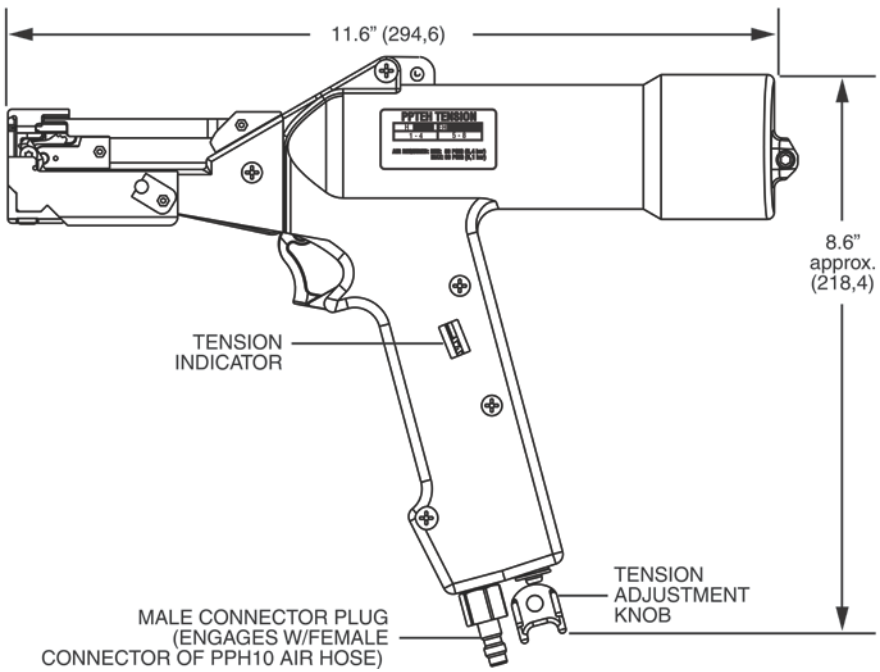

SPECIFICATIONS:

PANDUIT TOOL NO: PPTEH
TOOL WEIGHT: 52 oz. (1474 gr.)

INSTALLS ALL LH, H, & EH CROSS SECTION CABLE TIES.

CABLE TIE CROSS-SECTION CODE:
LH = Light Heavy H = Heavy EH = Extra Heavy

THIS TOOL TIGHTENS CABLE TIES AND CUTS OFF EXCESS PORTION WHEN PRESET TENSION IS ATTAINED.

USE TOOL WITH PPH10 AIR HOSE.

OPERATE TOOL WITH FILTERED, NON-LUBRICATED AIR, REGULATED BETWEEN 70 AND 80 PSI.

DIMENSIONS SHOWN IN PARENTHESIS ARE METRIC

F:/RVUSERS/ENGDOCS/CUSTDWGS/TM24096A01_03.doc

REV	DATE	BY	CHK	APR	DESCRIPTION	ECN
---	---	---	---	---	AND UPDATE FITTING	---
03	2-20-14	BLR	JEH	ABJ	REDRAWN: UPD TEMPLATE, BRANDING	4714

PPTEH CUSTOMER DRAWING

CUSTOMER DRAWING

ITEM REVISION NAME:

TM24096A01_03

PANDUIT

UNLESS OTHERWISE SPECIFIED, DIMENSIONAL TOLERANCES ARE:
(.x) ± --- (.xxx) ± ---
(.xx) ± --- ANGLES ± ---
THIRD ANGLE PROJECTION

MATERIAL: ----------

DRAWING NUMBER: TM24096A01

DRAWN BY:	DATE:	CHK	SCALE	SHT	SIZE
BLR	11-01-13	JEH	NONE	SHT 1 OF 1	A