Schneider Electric

OptiLine

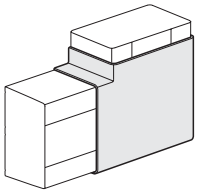

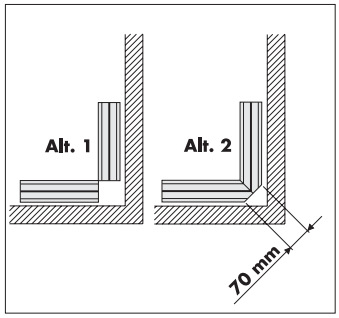

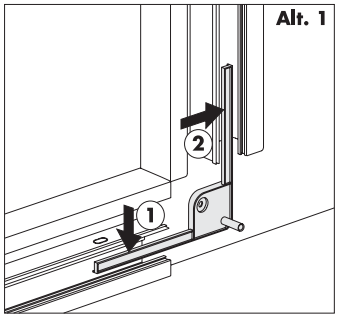

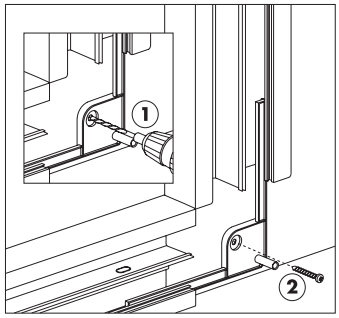

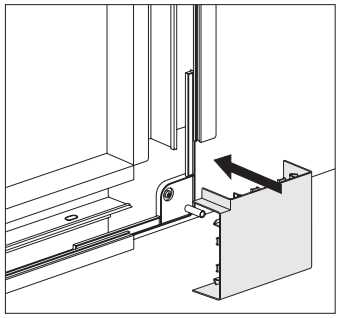

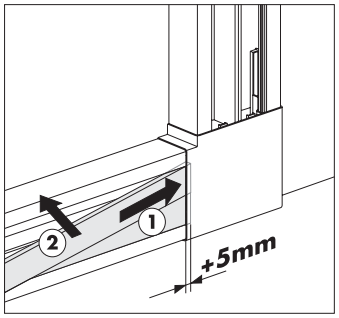

Art.No. 0075346 / 20054016 / 1111

Schneider Electric

OptiLine

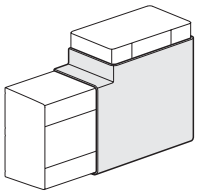

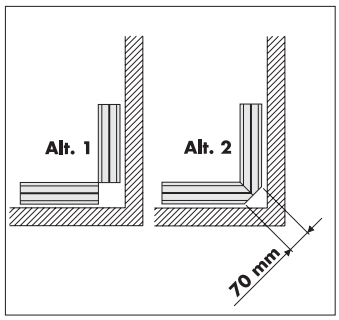

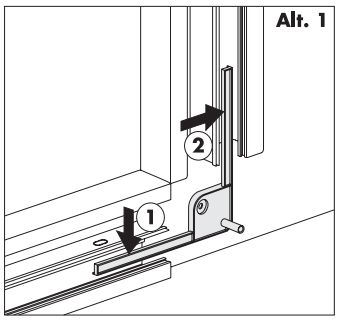

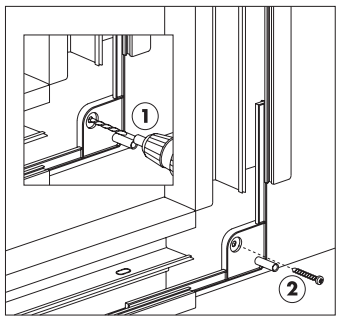

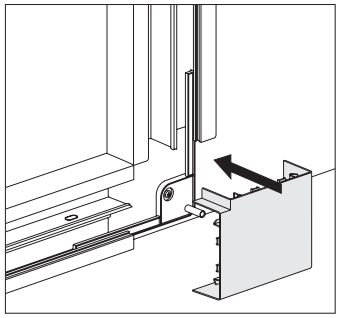

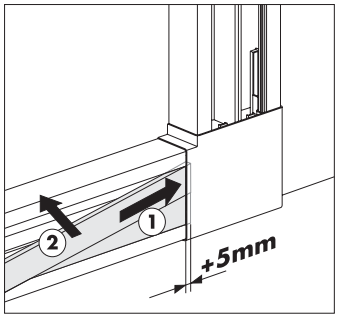

Art.No. 0075346 / 20054016 / 1111