WEEE Recyclables

1. LED Board
2. dimming cable
3. supply cable
4. LED driver
5. Surge protector

PLASTIC Recyclables

1. Lens
2. Reflective cup
3. Waterproof silicone strip
4. Cable gland
5. Pressure relief vent

METAL Recyclables

1. Inner and outer tooth pads
2. flat washer
3. flat washer
4. Outer hexagonal bolt
5. M3x8 pan head screws
6. M3x5 pan head screws
7. platen
8. Surface cover
9. Bracket
10. Heat sink
11. M4x16 screws
12. M4x6 pan head screw

Other Recyclables
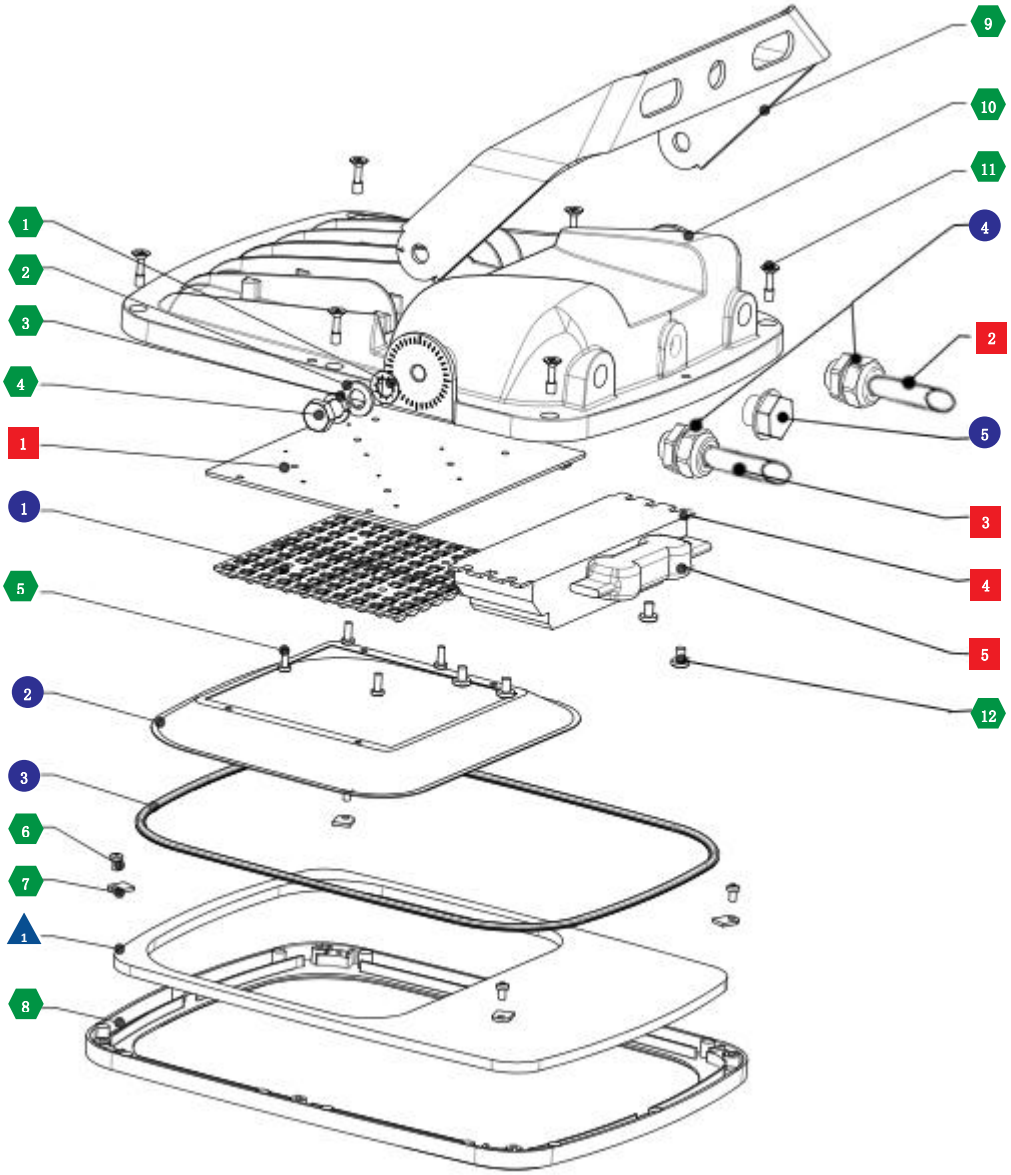
1. glass