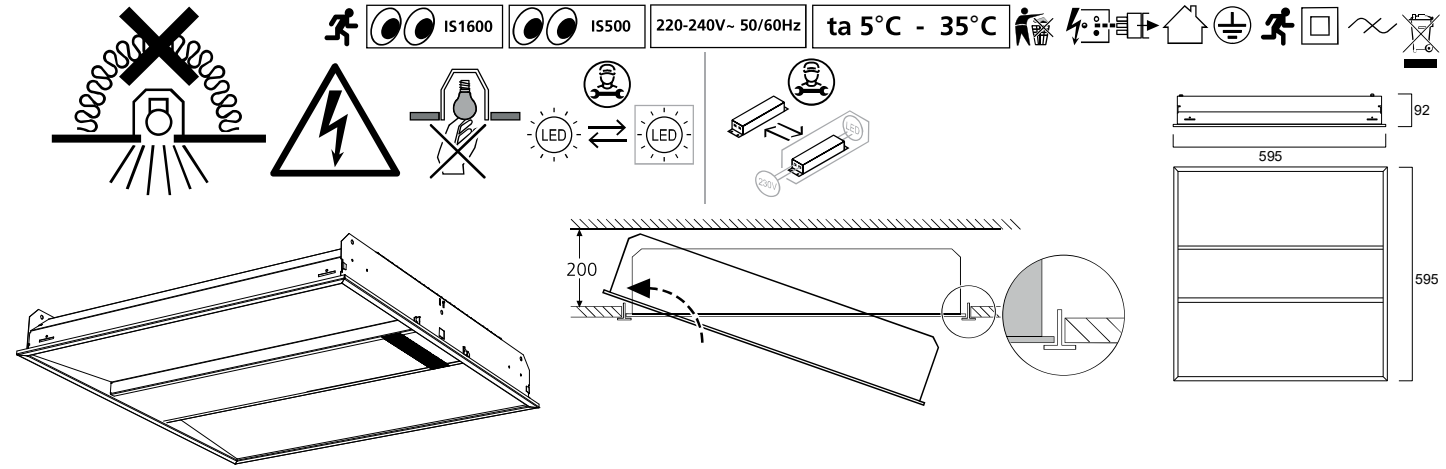
IS1600
IS500
220-240V~ 50/60Hz
ta 5°C - 35°C
LED
LED
92
595
595
200

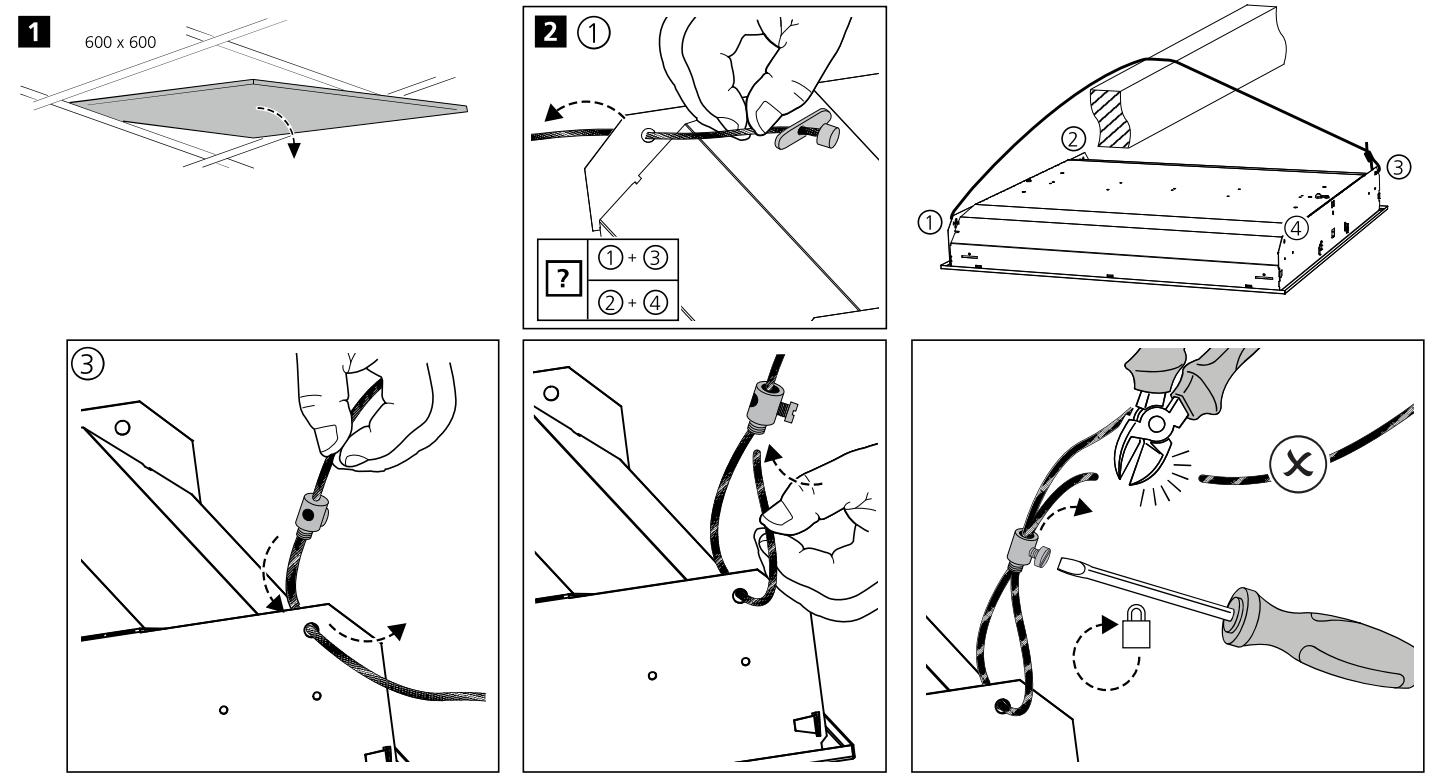
1
600 x 600
2
①
?
① + ③
② + ④
②
③
①
④
③

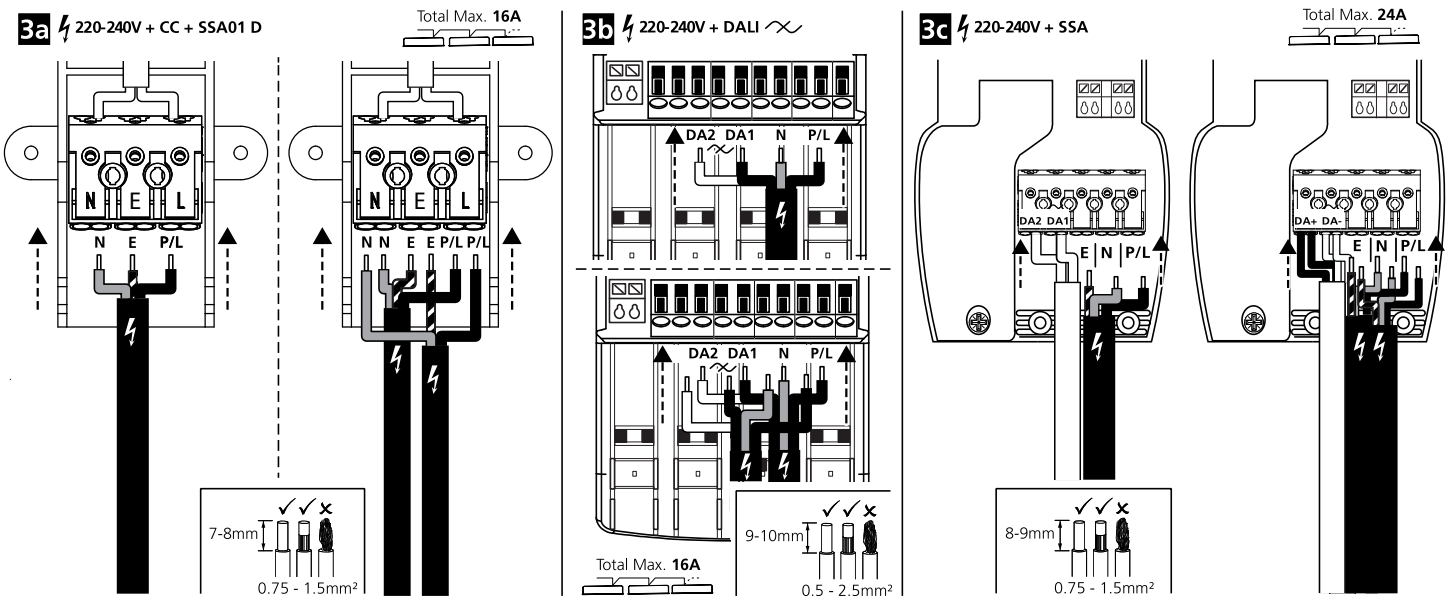
3a
220-240V + CC + SSA01 D
Total Max. 16A
N E L
N E P/L
N N E E P/L P/L
7-8mm
0.75 - 1.5mm²
3b
220-240V + DALI
DA2 DA1 N P/L
DA2 DA1 N P/L
9-10mm
0.5 - 2.5mm²
Total Max. 16A
3c
220-240V + SSA
Total Max. 24A
DA2 DA1
E N P/L
DA+ DA-
E N P/L
8-9mm
0.75 - 1.5mm²

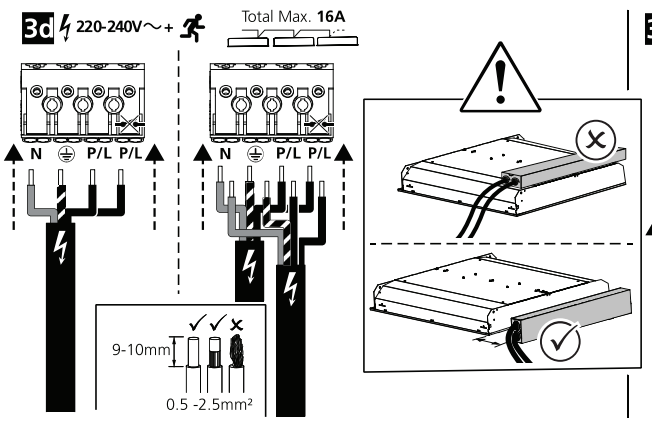

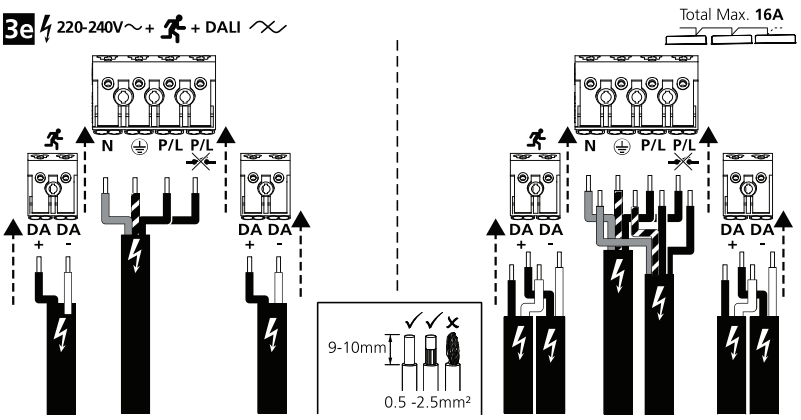

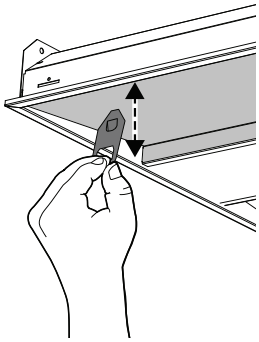

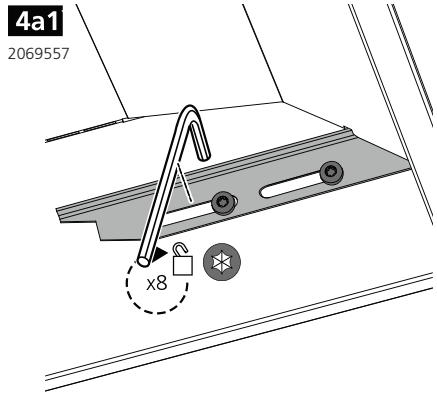

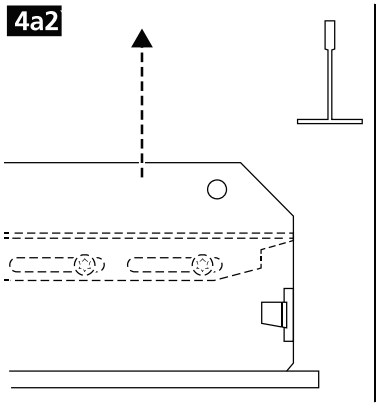

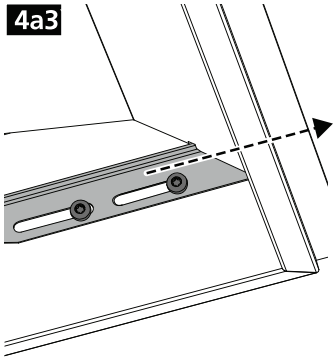

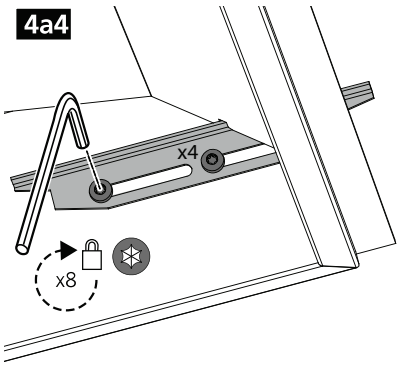

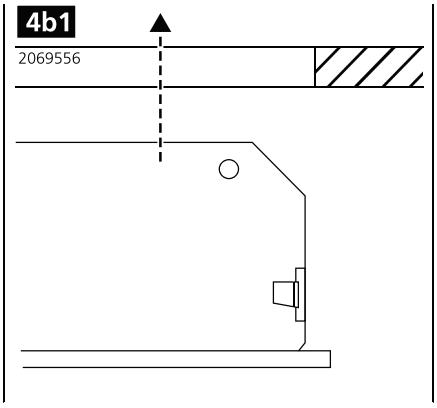

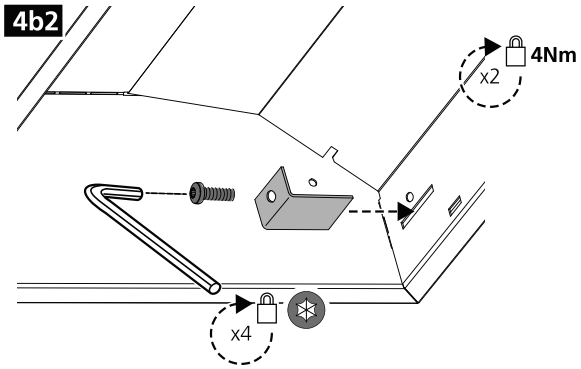

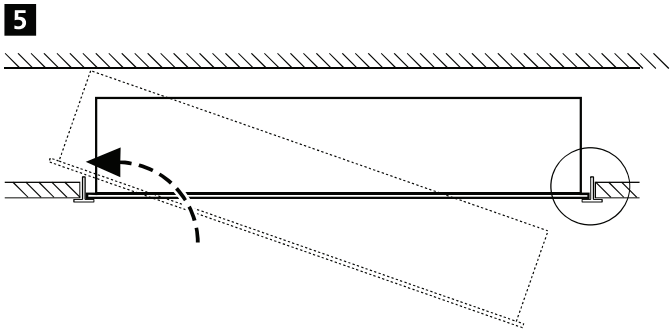

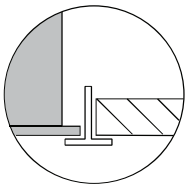

Concord by SYLVANIA

© Concord Lighting Limited 05.24