EN

INSTRUCTION SHEET

System pro E power

Brackets for fastening connections towards busbars or to terminate cables for horizontal moulded-case circuit-breakers

1STS100368R0001 - REV B

PBBT0200N

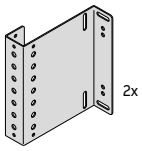

4x M6x10 Torx 30

PBBT0250N

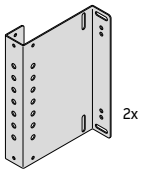

4x M6x10 Torx 30

PBBT0300N

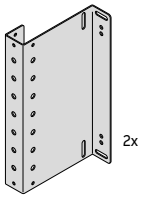

4x M6x10 Torx 30

PBBT0345N

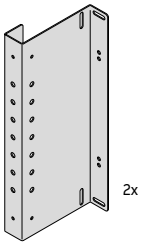

4x M6x10 Torx 30

PBBX0150N

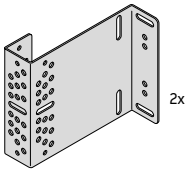

4x M6x10 Torx 30

PBBX2250N

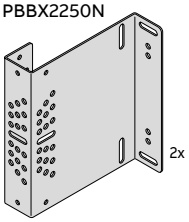

4x M6x10 Torx 30

INSTALLATION AND MAINTENANCE INSTRUCTIONS

The operations for the installation, putting into service and routine and emergency maintenance of the unit must be performed by qualified personnel with a detailed knowledge of the unit. ABB declines all responsibility for injury to people or damage to property resulting from a failure to comply with the instructions set out in this document.
Don't hesitate to contact ABB for any further information you may require.

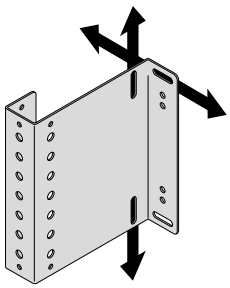

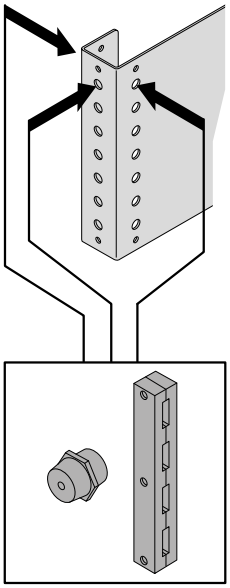

1

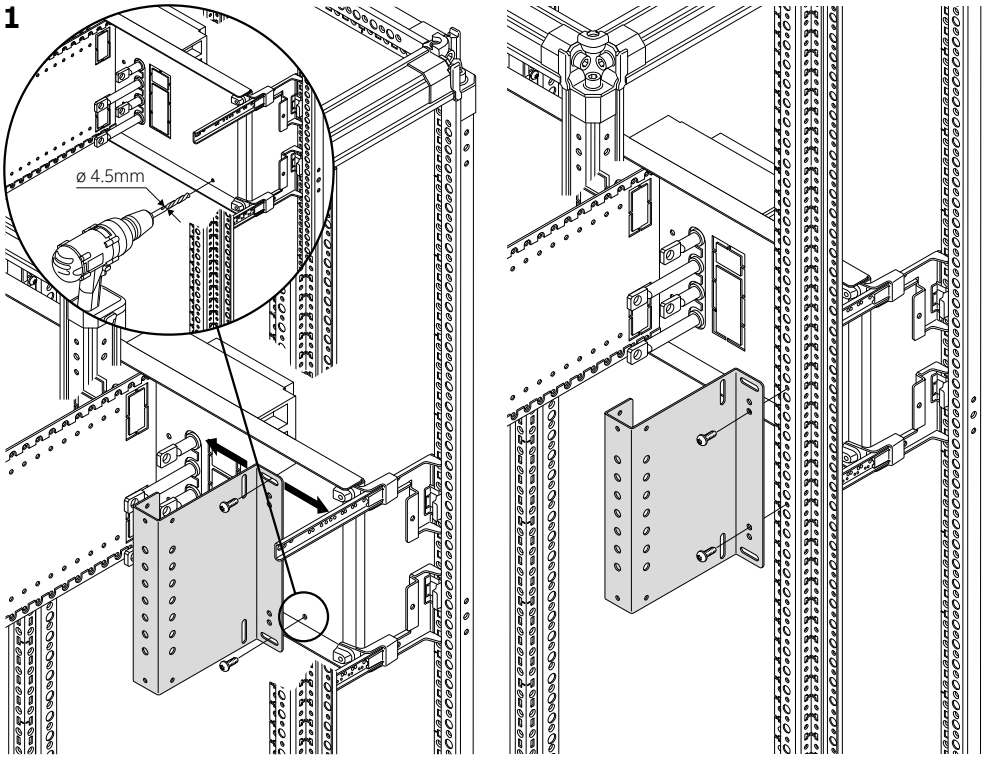

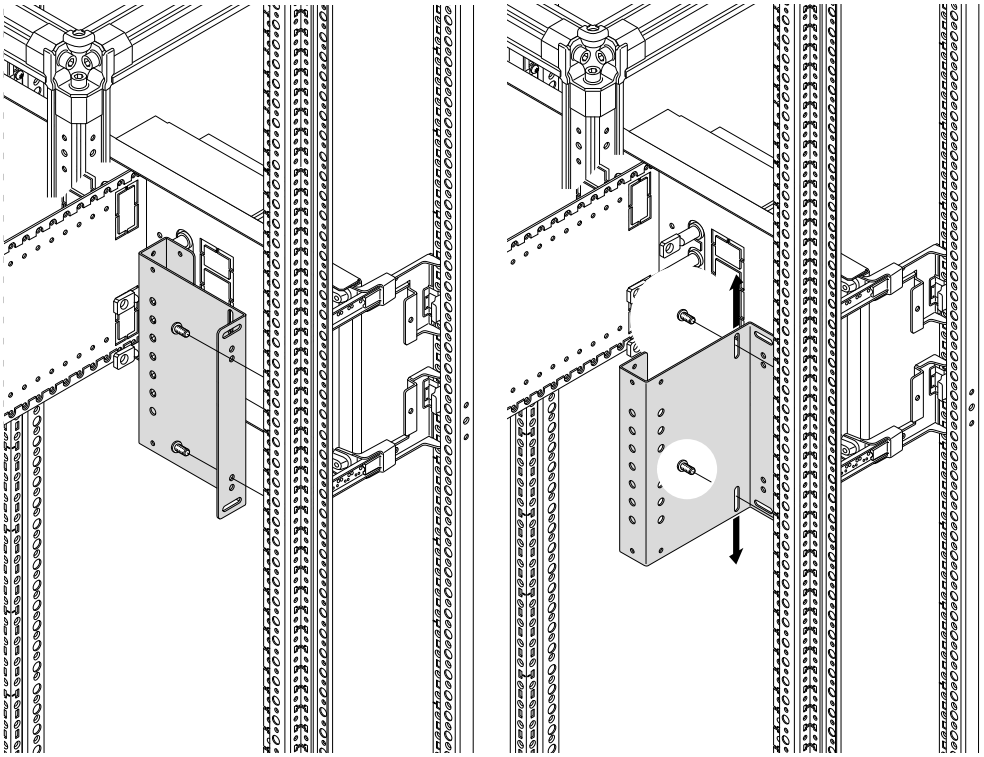

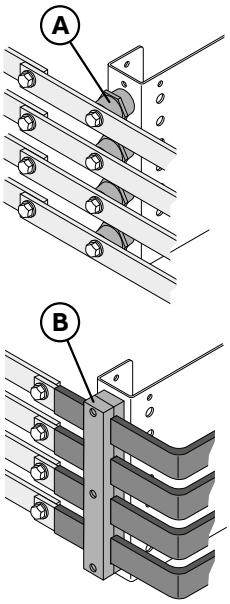

2

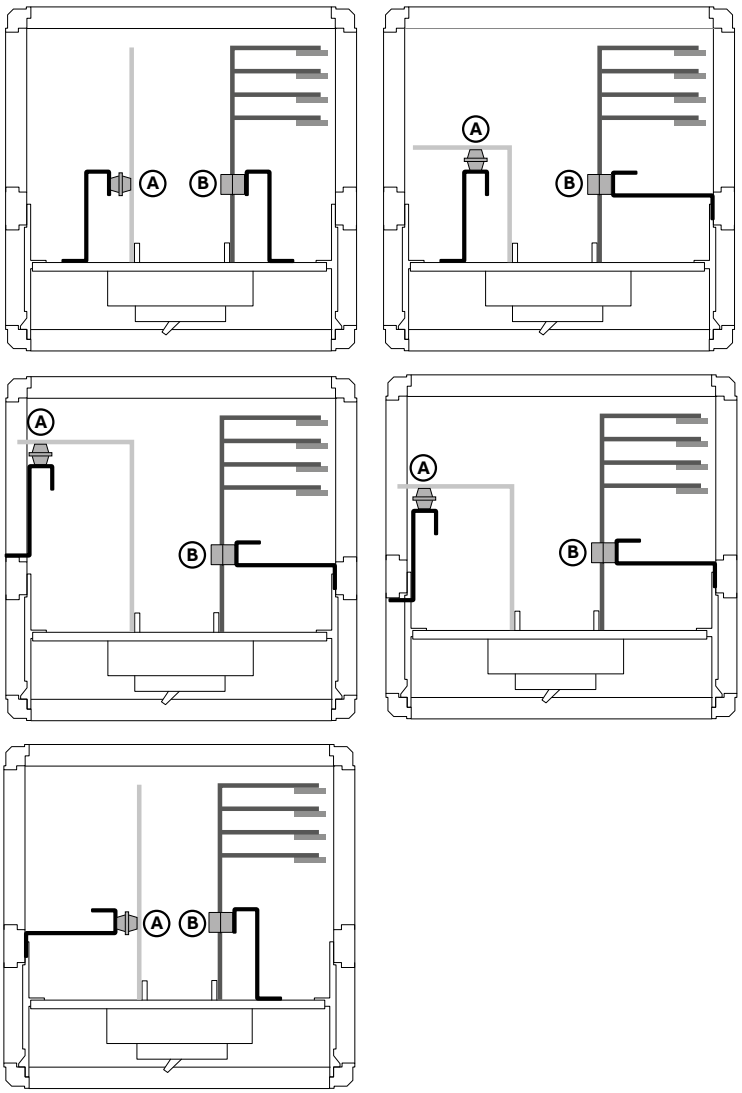

Form 4b

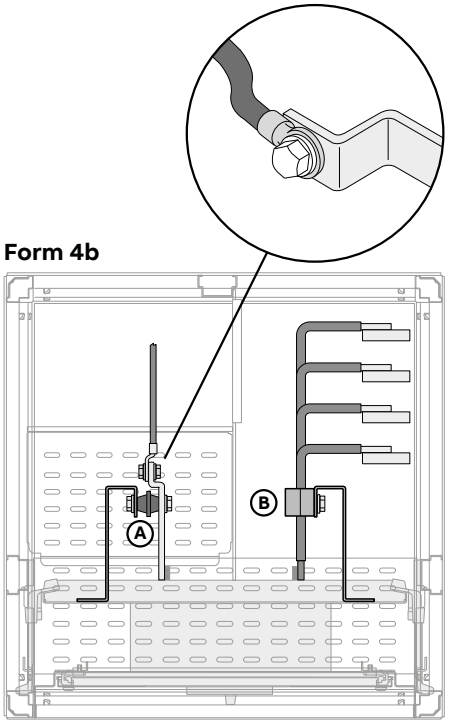

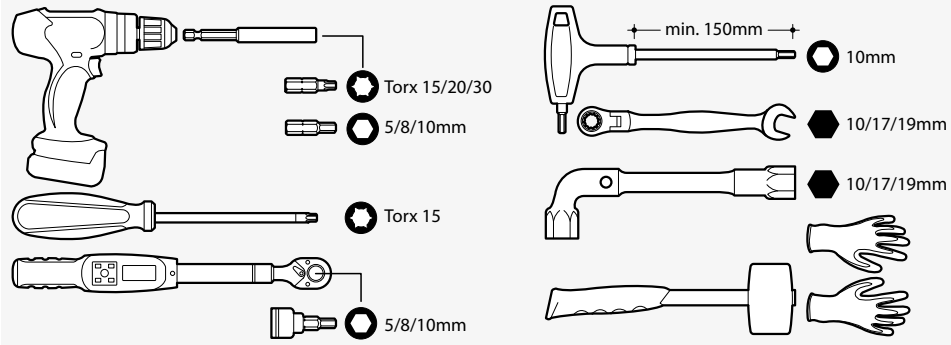

		max [Nm]
	M6	5
	M6	6
	M6	9÷10
	M6	9÷10
	M8	22÷24
	M10	43÷48
	M12	74÷82
	TCEI M6	20
	TCEI M10	20
	TCEI M12	20

—

ABB S.p.A
Electrification Business - Smart Power

ABB SACE Division
58, Via Italia
I-23846 Garbagnate Monastero (LC)
Phone: +39 031 3570.111
Fax: +39 031 3570.228
www.abb.com

Member of CISQ Federation
CERTIFIED MANAGEMENT SYSTEM
ISO 9001 - ISO 14001
BS OHSAS 18001

Due to possible developments of standards as well as of materials, the characteristics and dimensions specified in this document may only be considered binding after confirmation by ABB SACE.

1STS100368R0001 - 05/21 - REV B

© Copyright 2021 ABB. All rights reserved.