Tmax

DOC. N.° 1SDH000436R0822 - L7913

EF - Terminali anteriori prolungati T4-T5 fisso
EF - Extended front terminals T4-T5 fixed
EF - Vorderseitige verlängerte Anschlüsse T4-T5, fest
EF - Prises avant prolongées T4-T5 fixe
EF - Terminales frontales prolongados T4-T5 fijo
EF - 加长前接线端子T4-T5 固定式

		III	IV
T4	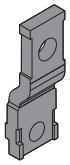	(3) 6	(4) 8
T5	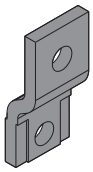	(3) 6	(4) 8
T4 T5	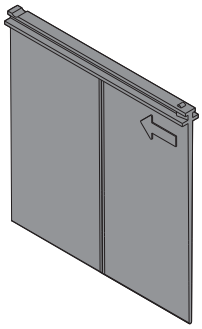	(2) 4	(3) 6
T4 T5	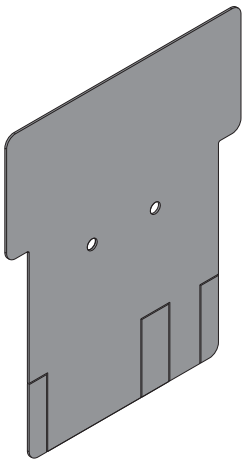	(1) 2	(1) 2

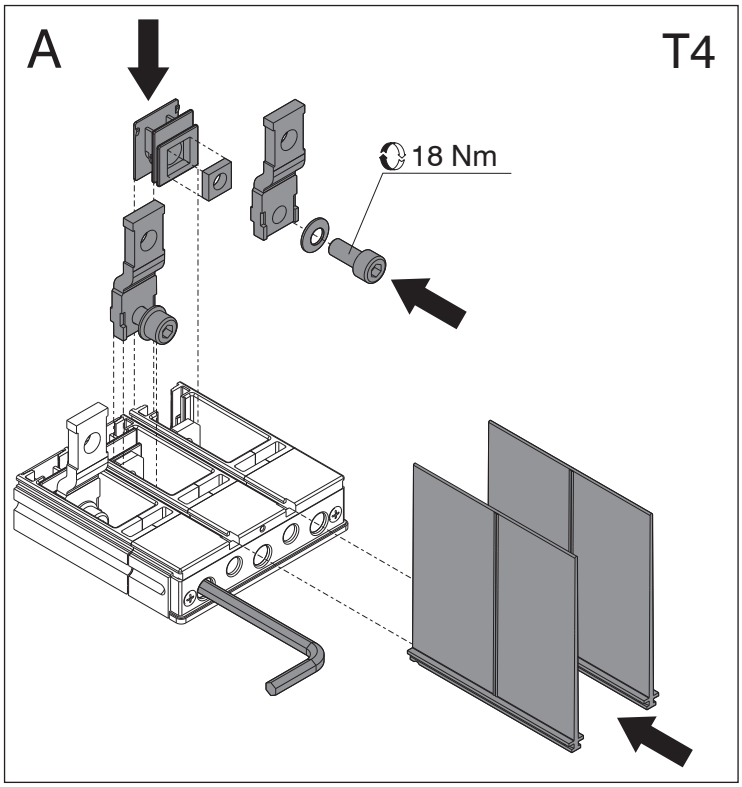

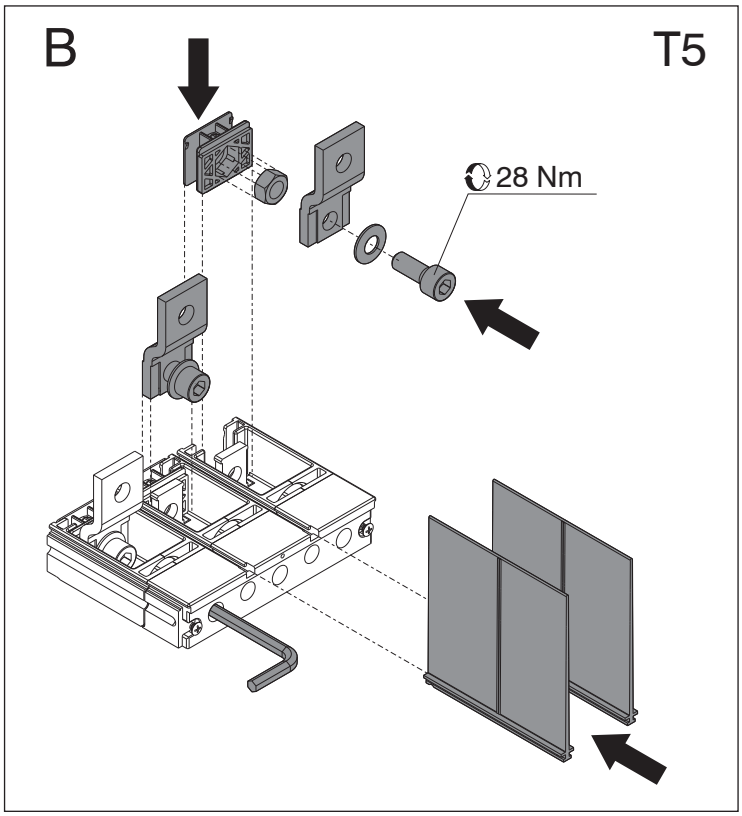

C

T4

Ue ≥ 500V

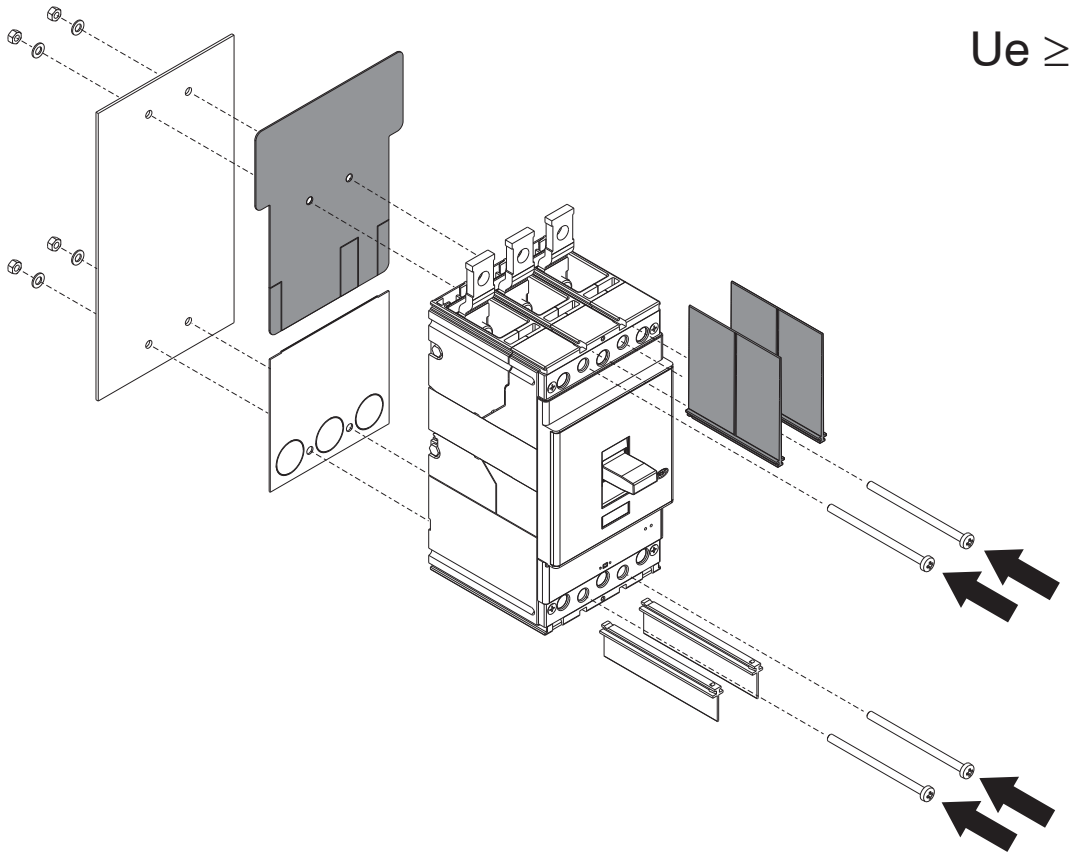

D

T5

Ue ≥ 500V

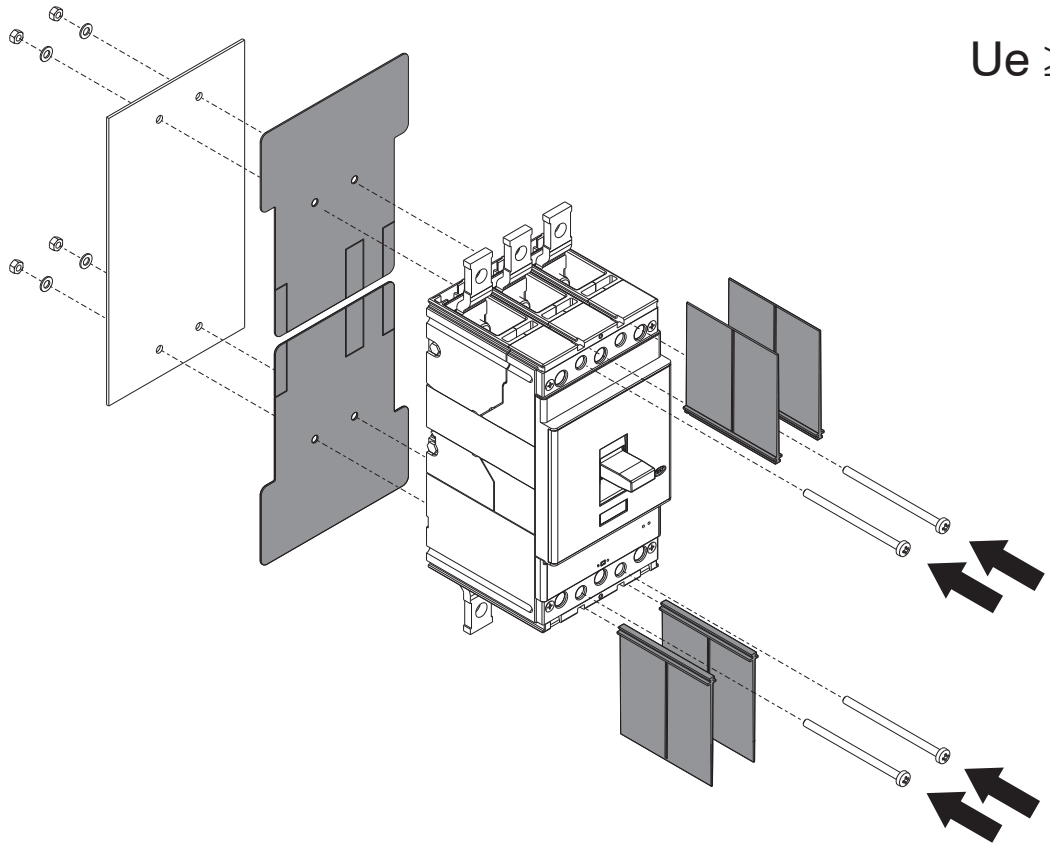

© Copyright 2008-2013 ABB. All rights reserved.

Power and productivity
for a better world™