RENOLUX MURAL & PLAFOND

Installation instructions
Verwerkingsvoorschrift
Instructions de montage
Montagevorschrift
Istruzioni di montaggio

ubbink

Build smart.

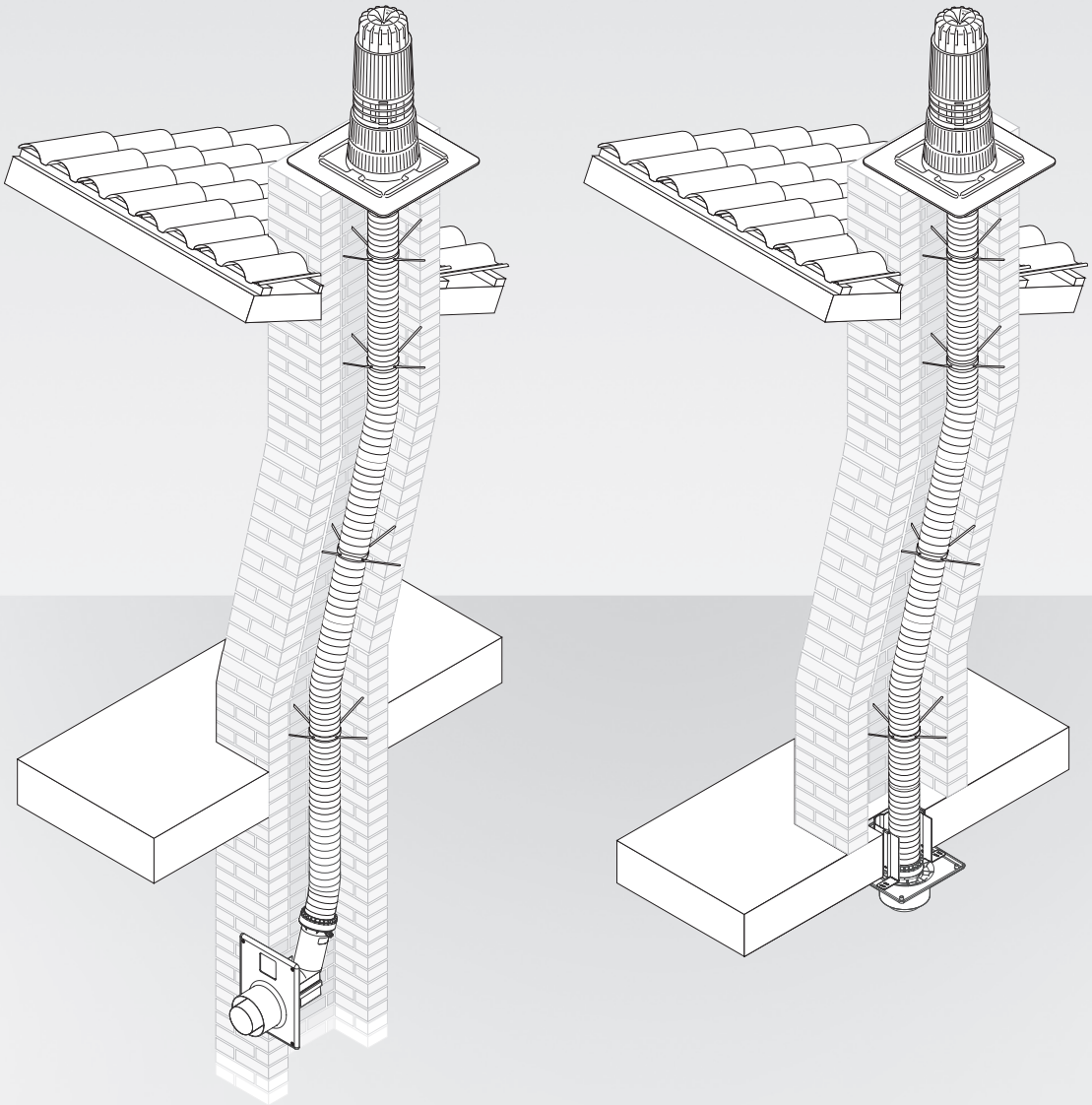

Renolux Mural

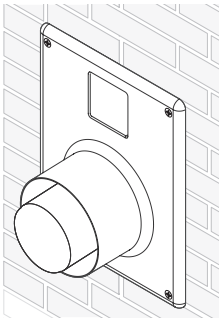

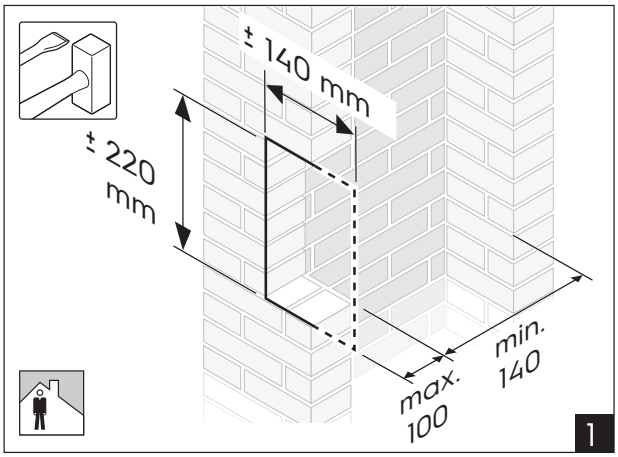

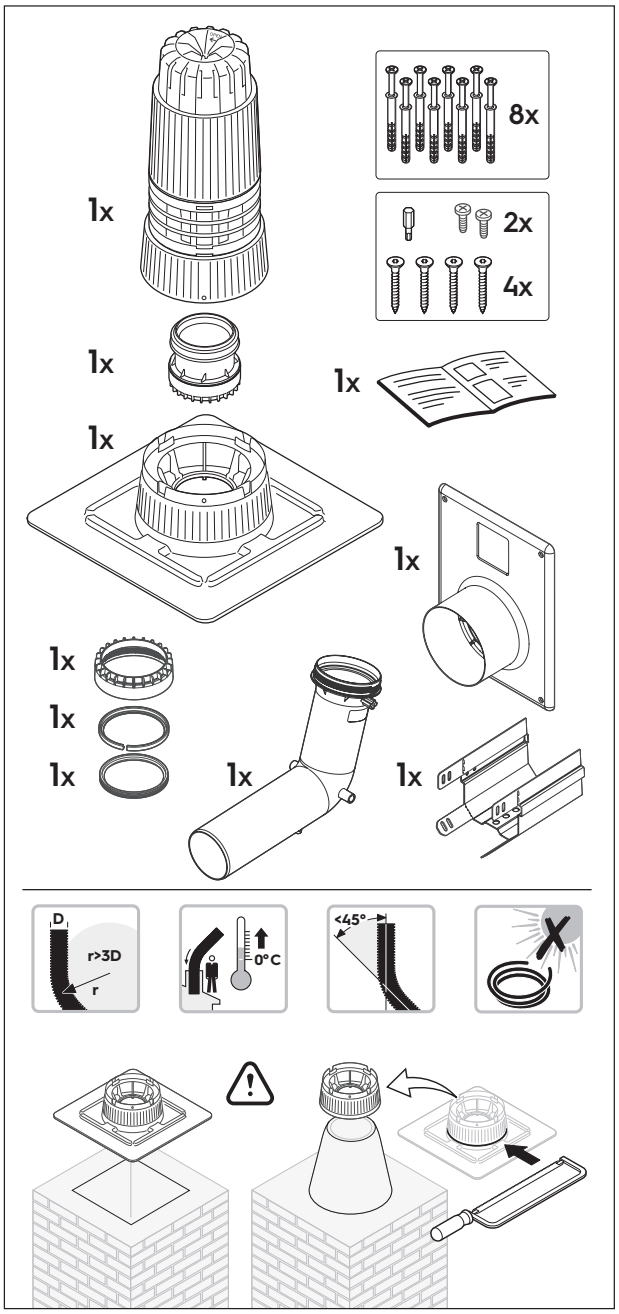

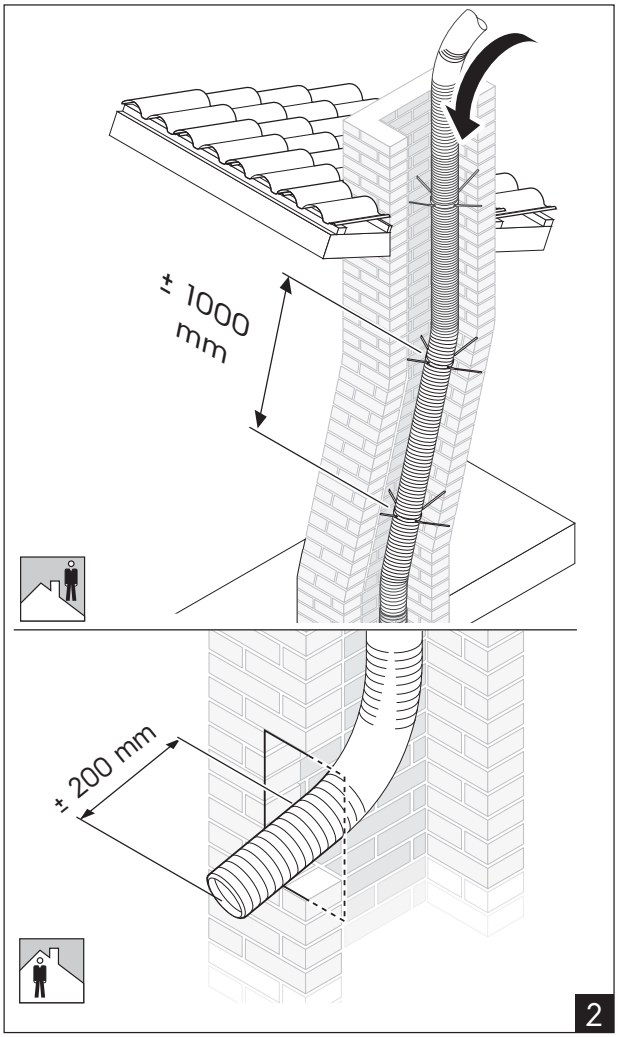

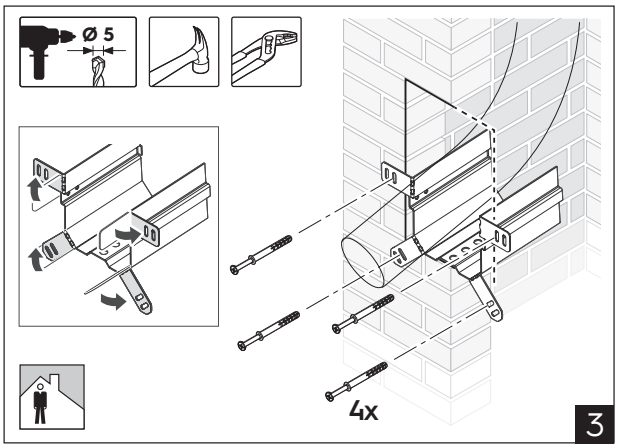

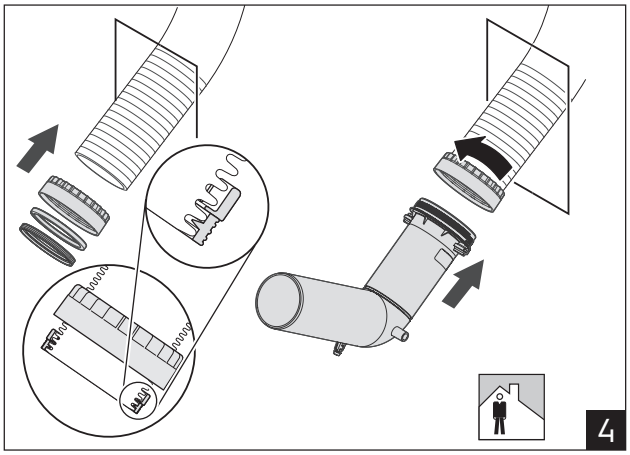
4

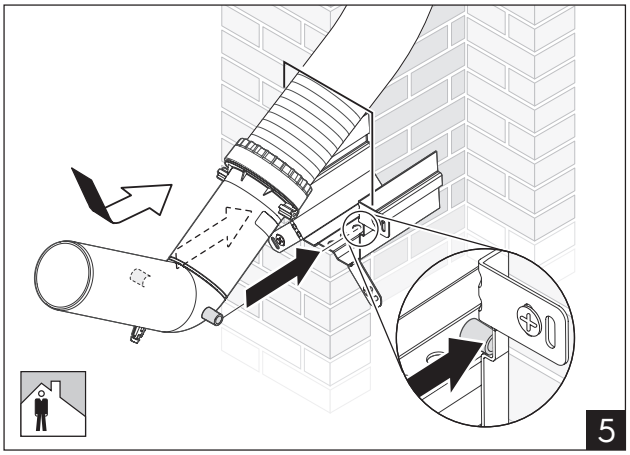
5

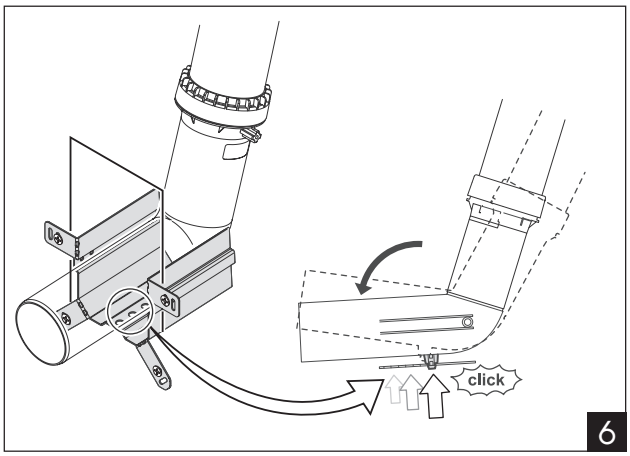
click
6

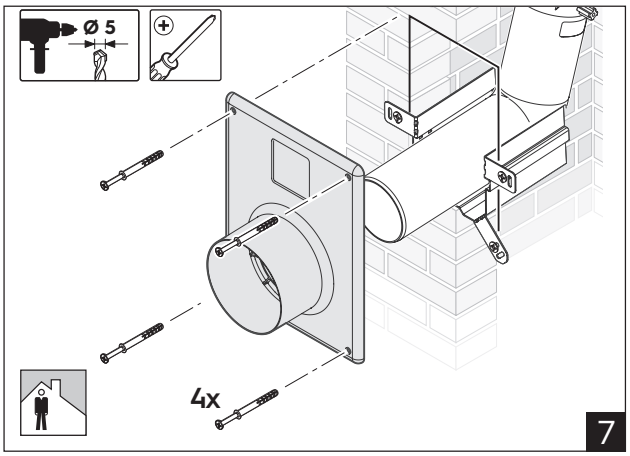
Ø 5
4x
7

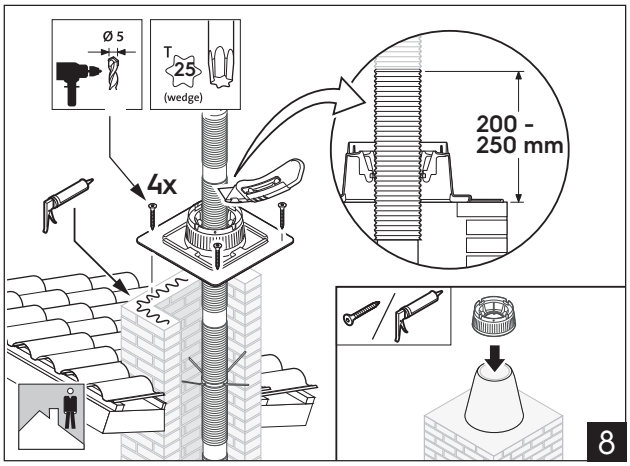
Ø 5
T
25
(wedge)
4x
200 -
250 mm
8

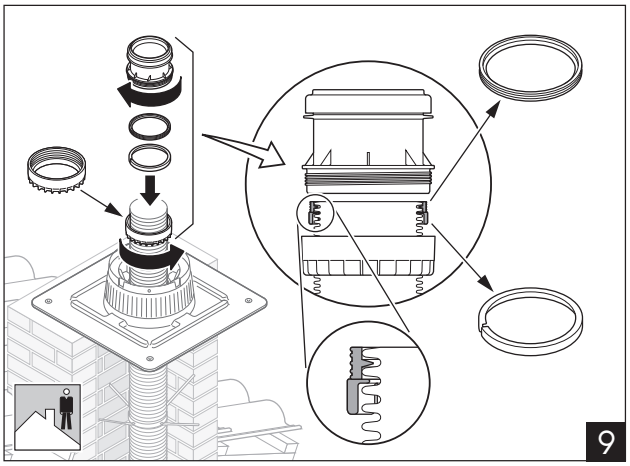
9

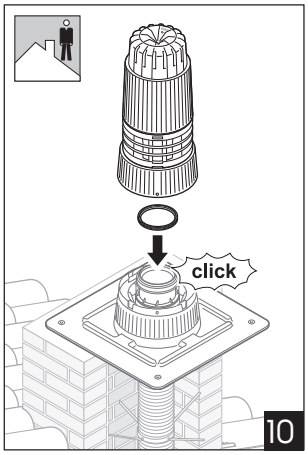
click
10

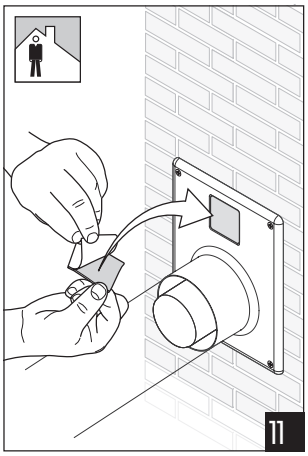
11

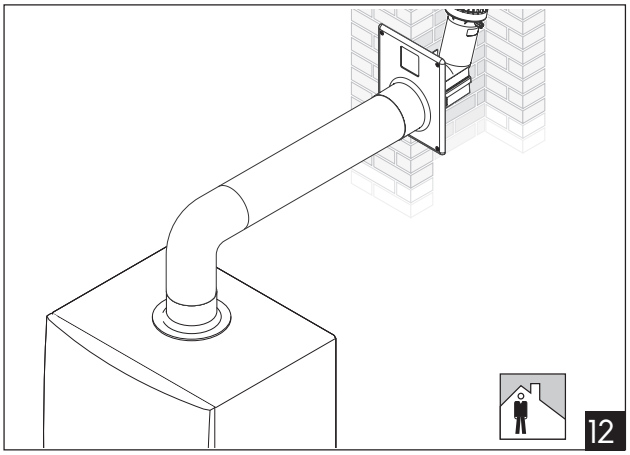
12

Renolux Plafond

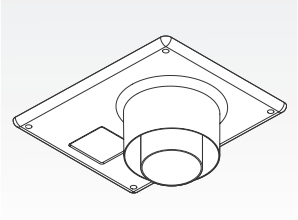

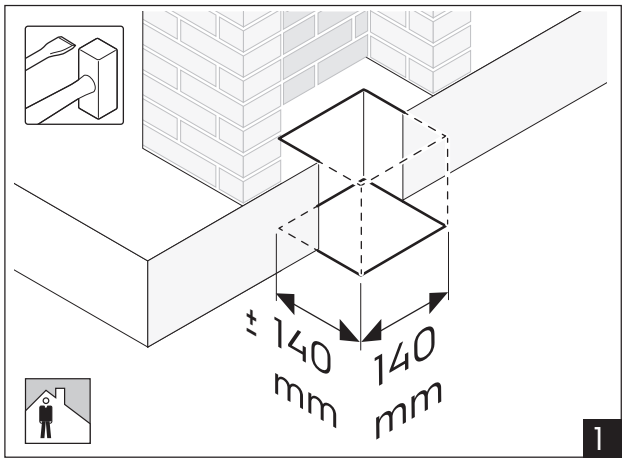

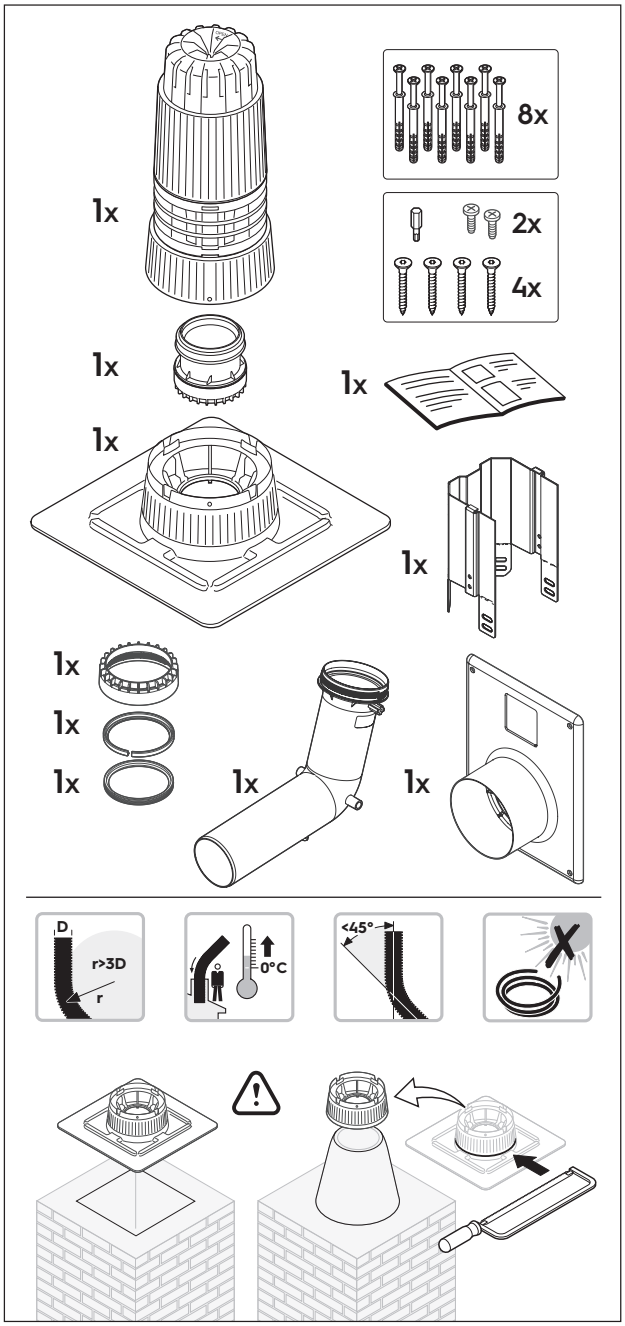

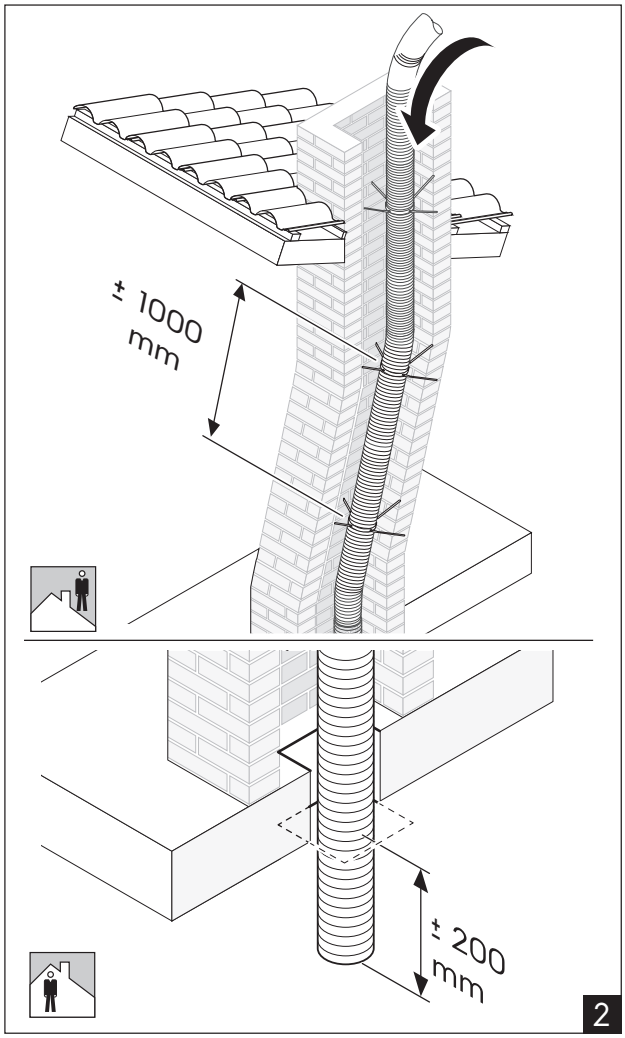

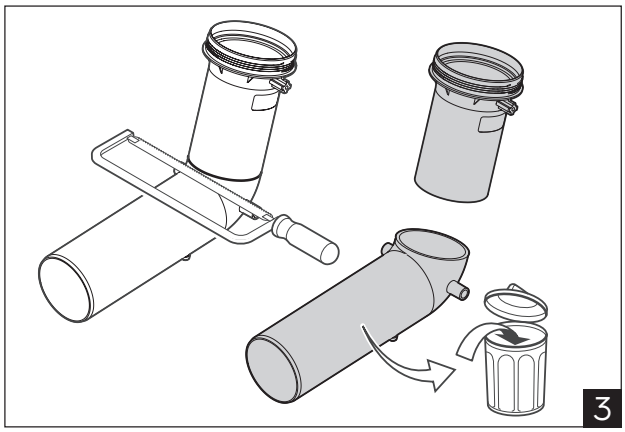

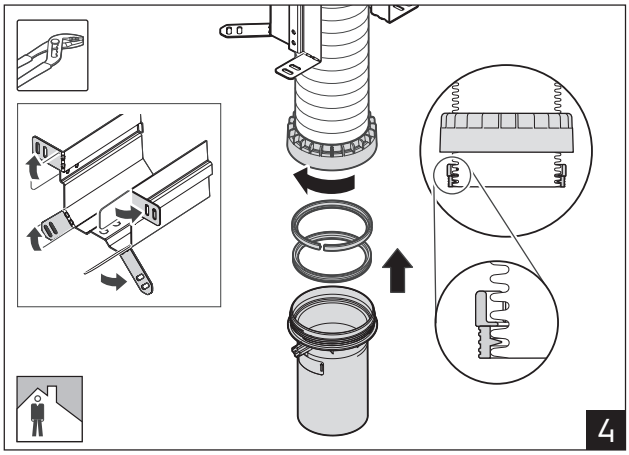
4

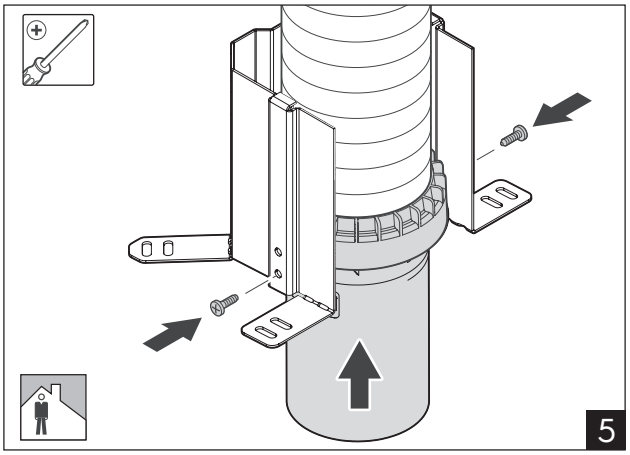
5

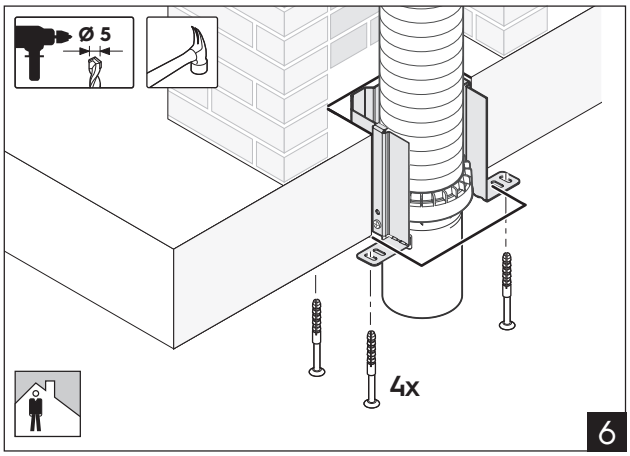
Ø 5
4x
6

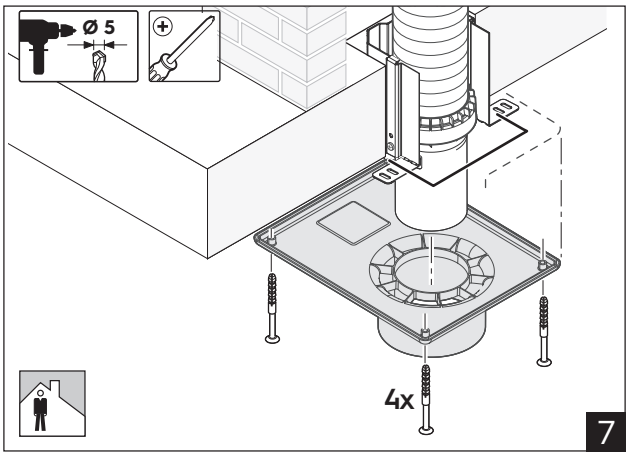
Ø 5
4x
7

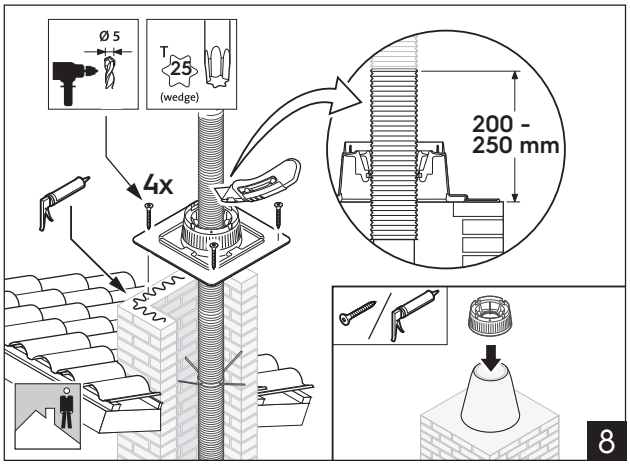
Ø 5
T
25
(wedge)
4x
200 -
250 mm
8

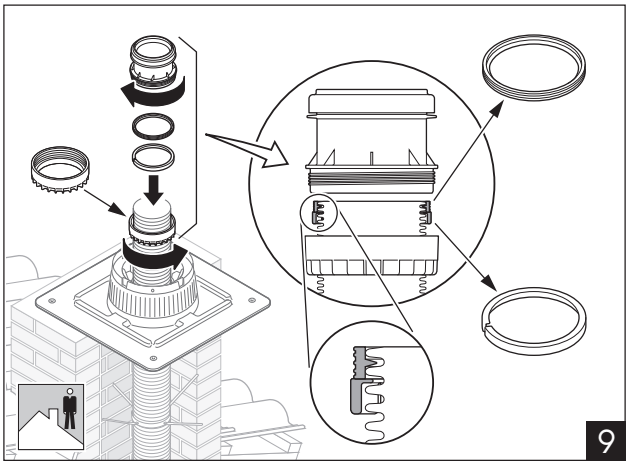
9

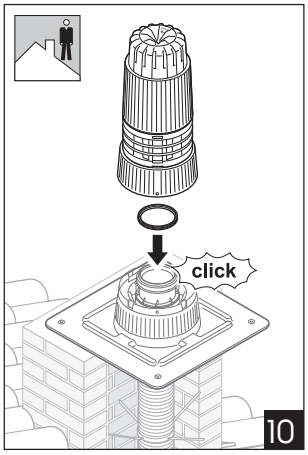
click
10

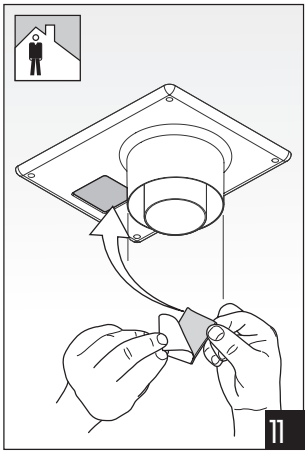
11

ubbink

Build smart.

ENERGY

VENTILATION

BUILDING

Nederland • +31 313 480-300 • productadvieslijn@ubbink.nl

France • +33 (0)2 51 13 46 46 • ubbink@ubbink.fr

Belgium • +32 9 237 11 00 • info.bouw@ubbink.be

United Kingdom • +44 1604 433-000 • info@ubbink.co.uk

Deutschland • +49 2301 91011-0 • info@ubbink.de

Italia • +39 045 602 0433 • info@ubbink.it

Ubbink International

info@ubbink.com • www.ubbink.com

Copyright © 2023 Ubbink | Content is subject to change without notice; no liability for errors and misprints.
Availability and configurations may differ per country | UB-2023-10-V01

100000072521