PERFORMANCE
iN LIGHTING

ART.: 3113307

SL720+ PL MP S/C

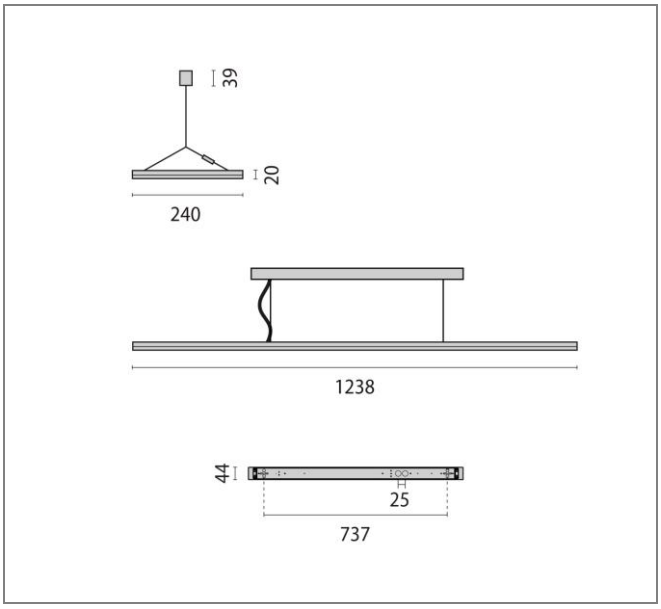

Art.: 3113307, SL720+ PL, Direct/indirect, 53W, TW 2700-6500K, Driver dali (TW), 1238mm, Symmetrical, > 75°, White, Suspended, LED luminaire for indoor, comprising: Extruded aluminium housing profile, powder coated. Micro. Prismatic diffuser for efficient light diffusion, glare reduction and a high uniformity. LED Sidelight-Technology for a homogenous light distribution over the entire area of the cover. Easy, subsequent replacement of the LED modules in just a few simple steps (can also be carried out without an electrician). Direct. Indirect light distribution. Colour rendering index Ra > 80. Colour tolerance according to MacAdam ≤ 3 SDCM. Dimmable via TouchDIM®. With the “OSRAM BT Control” Bluetooth control, the light can be easily configured, personalised or grouped via the app using various parameters. In the tunable white version, the illuminance level and light colour can be manually adjusted from 2,700 K to 6,500 K depending on the time of day (DALI DT8). In the HCL version, the illuminance level and light colour can be manually adjusted from 2,700 K to 6,500 K depending on the time of day (DALI DT8). Complete with steel suspension cable (1.5 m), transparent power cord and canopy. VDU application suitable acc. to EN 12464-1. Special colour versions available. Consult factory.
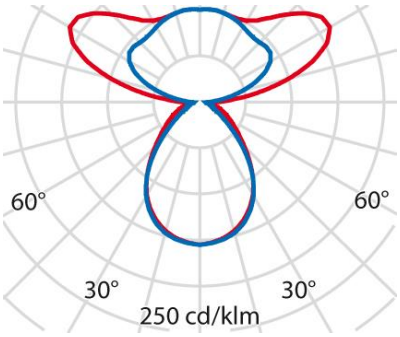
Connected load	53 W
Luminous flux	6320 lm
Efficiency	119 lm/W
Colour temperature	TW 2700-6500K
Colour rendering (CRI)	80
IP class	20
Nominal voltage	220 – 240 V
Colour	WH-RAL9016
UGR	≤ 16
Glare control	✓