PERFORMANCE
iN LIGHTING

ART.: 8555461516410

FL ROUND 555 PL MP CORONA



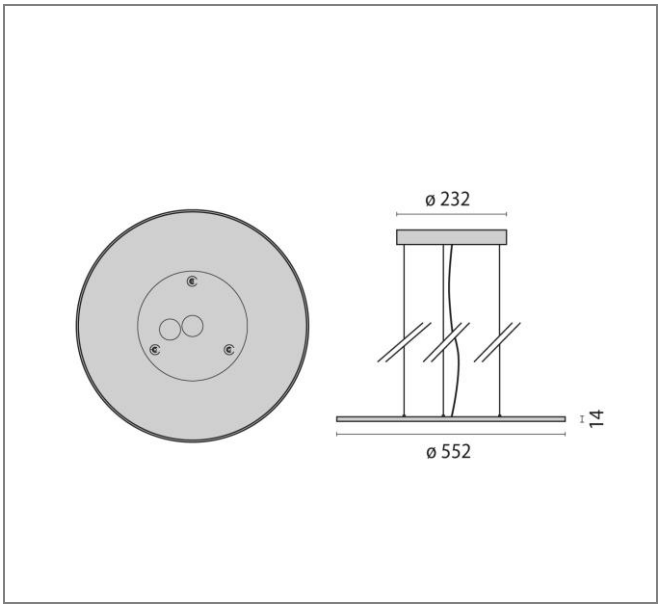

Art.: 8555461516410, FL ROUND 555 PL, Direct/indirect, 50W, 4000K, Driver dali, Symmetrical, > 75°, White, Suspended round LED luminaire for indoors, consisting of: Housing made from sheet steel and diecast aluminium, powder-coated / The fitting is available with different light optics: Micro-prismatic diffuser for efficient light diffusion, glare reduction and a high uniformity / Opal white diffuser cover for optimum light diffusion and excellent uniformity / LED Sidelight-Technology and light orienting plastic optic for a homogenous light distribution over the entire area of the cover / Light distribution direct or predominantly direct / Glare prevention in accordance with DIN EN 12464-1 (for designs with micro prism) / Colour rendering index Ra > 80 / Colour tolerance according to MacAdam ≤ 3 SDCM / Dimmable via TouchDIM / Complete with steel suspension cable (1.5 m), transparent power cord and ceiling rose / Complete with electric converter

Connected load	50 W
Luminous flux	6150 lm
Efficiency	123 lm/W
Colour temperature	4000K
Colour rendering (CRI)	80
IP class	20
Nominal voltage	220 – 240 V
Colour	WH-RAL9016
UGR	≤ 22

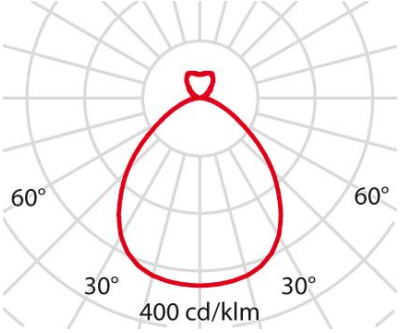

Performance in Lighting GmbH | Stapelner Str. 1 + 3 | 38644 Goslar | Germany | Tel. +49 (0) 5321 / 37 77-0 | Fax +49 (0) 53 21 / 37 77-99
info.de@pil.lighting | www.light-performer.com | www.performanceinlighting.com