Part number

CKAX 03 CXA



Cover,CKA series, with 1 lever, size "21.21", for male inserts, with loop

Product description	
Product type	Cover
Series	CKA
Closing type	With 1 lever
Size	Size "21.21"
Specification	For male inserts, with loop
Technical data	
IP degree of protection	IP44 - IP66 / IP67 / IP69 with CKR 65 (D)
Further technical details	
Weight	30,00 g
Operating temperature range (min, max)	-40°C...+125°C

Material properties	
Main material	Zinc die-cast
Other materials	Lever: Stainless steel Loop: Nylon, galvanized brass
Colour	RAL 7040 grey
RoHs conformity	Compliant
China RoHs - EFUP	E
REACH SVHC substances	No
Approvals / Standards	
UL	ECBT2
cUL	ECBT8
General ordering information	
EAN13 code	8015747027496
eCl@ss 8.1	27440208
ETIM 7.0	EC002314
Packaging Information	
Packaging length	220,00 mm
Packaging height	130,00 mm
Packaging width	240,00 mm
Packaging weight	3,11 kg
Packaging volume	6,86 dm³
Packaging description	Carton box
Packaging quantity	100 Pcs
Packaging EAN code	8015747297660
Sub-packaging weight	0,31 kg
Sub-packaging description	Plastic bag
Sub-packaging quantity	10 Pcs
Sub-packaging EAN barcode	8015747027502

Part number

CKAX 03 CXA

Catalogue drawings

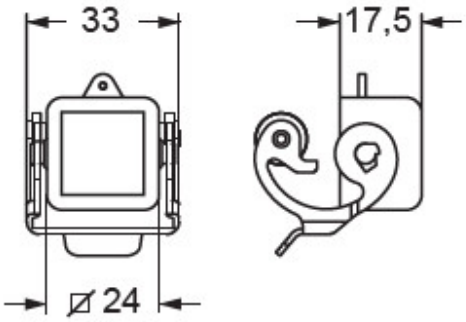

Notes

Dimensions shown in mm are not binding and may be changed without notice.