TOSHIBA
Leading Innovation >>>

E17-311

Digital Inverter 6 series 3 Phase 8-10HP

Engineering Data Book

Outdoor Unit

RAV-SM2246AT8-E
RAV-SM2806AT8-E

Contents

1. Outdoor unit

1-1. Specifications

1-2. Dimension

1-3. Wiring Diagrams

1-4. Refrigerant Cycle Diagram

1-5. Sensible Capacity Table

1-6. Part Load Table

1-7. Sound Data

1-8. Pipe Capacity Correction

2. Indoor unit

2-1. 4-way Cassette Type

2-2. Compcat 4-way Cassette Type

2-3. Ducted Type (-E)

2-4. Ducted Type (-E1)

2-5. Slim Duct Type

2-6. Ceiling Type

2-7. High Wall Type

1. Outdoor unit

1-1. Specifications
1-2. Dimension
1-3. Wiring Diagrams
1-4. Refrigerant Cycle Diagram
1-5. Sensible Capacity Table
1-6. Part Load Table
1-7. Sound Data
1-8. Pipe Capacity Correction

Type	**Appearance**	**Capacity (kW)**	**8HP**	**10HP**
			RAV-SM2246AT8-E	**RAV-SM2806AT8-E**
4-way cassette		5.6	RAV-SM564UTP-E ×4	-
		8.0	RAV-SM804UTP-E ×3	RAV-SM804UTP-E ×3
				RAV-SM804UTP-E ×4
		11.0	RAV-SM1104UTP-E ×2	-
		14.0	-	RAV-SM1404UTP-E ×2
Compact 4-way cassette		5.6	RAV-SM567MUT-E ×4	-
Concealed duct (-E)		5.6	RAV-SM566BTP-E ×4	-
		8.0	RAV-SM806BTP-E ×3	RAV-SM806BTP-E ×3
				RAV-SM806BTP-E ×4
		11.0	RAV-SM1106BTP-E ×2	-
		14.0	-	RAV-SM1406BTP-E ×2
Concealed duct (-E1)		5.6	RAV-SM566BTP-E1 ×4	-
		8.0	RAV-SM806BTP-E1 ×3	RAV-SM806BTP-E1 ×3
				RAV-SM806BTP-E1 ×4
		11.0	RAV-SM1106BTP-E1 ×2	-
Slim duct		5.6	RAV-SM564SDT-E ×4	-
Concealed Duct High Static Pressure		22.0	RAV-SM2244DTP-E	-
		28.0	-	RAV-SM2804DTP-E
Ceiling		5.6	RAV-SM568CTP-E ×4	-
		8.0	RAV-SM808CTP-E ×3	RAV-SM808CTP-E ×3
				RAV-SM808CTP-E ×4
		11.0	RAV-SM1108CTP-E ×2	-
		14.0	-	RAV-SM1408CTP-E ×2
High wall		5.6	RAV-SM566KRT-E ×4	-
		8.0	RAV-SM806KRT-E ×3	RAV-SM806KRT-E ×3
				RAV-SM806KRT-E ×4

1-1. Specifications

Indoor unit (4-way Cassette Type)

Model	**Indoor unit**			**RAV-SM1104UTP-E**	**RAV-SM1404UTP-E**	**RAV-SM804UTP-E**	**RAV-SM804UTP-E**	**RAV-SM564UTP-E**	**RAV-SM804UTP-E**
				RAV-SM1104UTP-E	**RAV-SM1404UTP-E**	**RAV-SM804UTP-E**	**RAV-SM804UTP-E**	**RAV-SM564UTP-E**	**RAV-SM804UTP-E**
				-	**-**	**RAV-SM804UTP-E**	**RAV-SM804UTP-E**	**RAV-SM564UTP-E**	**RAV-SM804UTP-E**
				-	**-**	**-**	**-**	**RAV-SM564UTP-E**	**RAV-SM804UTP-E**
	Outdoor unit			**RAV-SM2246AT8-E**	**RAV-SM2806AT8-E**	**RAV-SM2246AT8-E**	**RAV-SM2806AT8-E**	**RAV-SM2246AT8-E**	**RAV-SM2806AT8-E**
Cooling capacity			kW	20.0(4.6-22.4)	23.5(4.6-27.0)	20.0(4.6-22.4)	23.5(4.6-27.0)	20.0(4.6-22.4)	23.5(4.6-27.0)
Heating capacity			kW	22.4(4.6-25.0)	27.0(4.6-31.5)	22.4(4.6-25.0)	27.0(4.6-31.5)	22.4(4.6-25.0)	27.0(4.6-31.5)
Power supply				3 phase 400V(380V-415V) 50Hz					
Electrical characteristics	Cooling	Running current (380-415V)	A	8.99 - 8.23	12.79 - 11.71	8.99 - 8.23	12.79 - 11.71	8.99 - 8.23	12.79 - 11.71
		Power input	kW	5.56	7.83	5.56	7.83	5.56	7.83
		EER		3.60	3.00	3.60	3.00	3.60	3.00
	Heating	Running current (380-415V)	A	8.83 - 8.08	12.02 - 11.01	8.83 - 8.08	12.02 - 11.01	8.83 - 8.08	12.02 - 11.01
		Power input	kW	5.46	7.36	5.46	7.36	5.46	7.36
		COP		4.10	3.67	4.10	3.67	4.10	3.67
		Maximum current	A	18.0	23.0	18.0	23.0	18.0	23.0
Indoor unit									
Model name				RAV-SM1104UTP-E	RAV-SM1404UTP-E	RAV-SM804UTP-E	RAV-SM804UTP-E	RAV-SM564UTP-E	RAV-SM804UTP-E
Appearance	Main unit			Zinc hot dipping steel plate					
	Ceiling panel (Sold separately)	Model name		RBC-U31PG(W,WS)-E, RBC-U31PGS(W,WS)-E					
		Panel color		W:Moon-white(2.5GY 9.0/0.5), WS:Stripe-white(2.5GY 9.0/0.5, (Gray: 8B 3/0.3))					
Outer dimension	Main unit	Height	mm	319	319	256	256	256	256
		Widh	mm	840	840	840	840	840	840
		Depth	mm	840	840	840	840	840	840
	Ceiling panel (Sold separately)	Height	mm	30	30	30	30	30	30
		Widh	mm	950	950	950	950	950	950
		Depth	mm	950	950	950	950	950	950
Total weight	Main unit		kg	24	24	20	20	20	20
	Ceiling panel		kg	4.2	4.2	4.2	4.2	4.2	4.2
Heat exchanger				Finnd tube					
Fan unit	Type			turbo fan					
	Standard air flow	H/M/L	m^3/min	33.5/24.0/19.5	35.0/24.0/20.5	20.5/16.0/13.5	20.5/16.0/13.5	17.5/14.5/13.0	20.5/16.0/13.5
	Motor output		W	68	72	20	20	14	20
Sound pressure level		H/M/L	dB(A)	43/38/33	44/38/34	35/31/28	35/31/28	32/29/28	35/31/28
Sound power level		H/M/L	dB(A)	58/53/48	59/53/49	50/46/43	50/46/43	47/44/43	50/46/43
Drain port				VP25	VP25	VP25	VP25	VP25	VP25
Air filter				Long life filter	Long life filter	Long life filter	Long life filter	Long life filter	Long life filter
Branch-kit				RBC-TWP101E	RBC-TWP101E	RBC-TRP100E	RBC-TRP100E	RBC-DTWP101E	RBC-DTWP101E
Outdoor unit									
Piping	Standard length		m	7.5	7.5	7.5	7.5	7.5	7.5
	Minimum length		m	5.0	5.0	5.0	5.0	5.0	5.0
	Maximum total length		m	100.0	100.0	100.0	100.0	100.0	100.0
	Regrigerant chargeless length		m	30.0	30.0	30.0	30.0	30.0	30.0
	Maximum high difference		m	30.0	30.0	30.0	30.0	30.0	30.0
	Main pipe	Gas	mm	28.6	28.6	28.6	28.6	28.6	28.6
		Liquid	mm	12.7	12.7	12.7	12.7	12.7	12.7
	Branch pipe 1	Gas	mm	15.9	15.9	15.9	15.9	15.9	15.9
		Liquid	mm	9.5	9.5	9.5	9.5	9.5	9.5
	Branch pipe 2	Gas	mm	-	-	-	-	12.7	15.9
		Liquid	mm	-	-	-	-	6.4	9.5
Fan unit	Type			Propeller fan					
	Standard air flow		m^3/min	153	182	153	182	153	182
	Fan moter output		W	200+200	200+200	200+200	200+200	200+200	200+200
Sound pressure level		Cooling/Heating	dB(A)	58/60	61/63	58/60	61/63	58/60	61/63
Sound power level		Cooling/Heating	dB(A)	76/76	78/80	76/76	78/80	76/76	78/80
Operation range		Cooling	DBC	-15 to 52					
		Heating	WBC	-27 to 15					

*1 : The Cooling capacity and electrical characteristics are measured under the conditions specified by JIS B 8615-1 based on the reference piping.
The reference piping consists of 5m of main piping and 2.5m of branch piping connected with 0 meter height.

*2 : The sound lebel are measured in an anechoic chamber in accordance with JIS B 8616. Normally, the values measured in the actual operatin enviroment become larger than the indicated values due to the effects of external sound.

*3 : Height from the ceiling. Depth doesn't include the Erectric parts box.

Notes ;

Rated conditions

Cooling : Indoor air temperature 27°CDB/ 19 °CWB, Outdoor air temperature 35°CDB

Heating : Indoor air temperature 20°CDB, Outdoor air temperature 7°CDB/ 6 °CWB

Indoor unit (Compact 4-way Cassette (600 × 600) Type)

Model	**Indoor unit**			**RAV-SM567MUT-E**
				RAV-SM567MUT-E
				RAV-SM567MUT-E
				RAV-SM567MUT-E
	Outdoor unit			**RAV-SM2246AT8-E**
Cooling capacity			kW	20.0(4.6- 22.4)
Heating capacity			kW	22.4(4.6-25.0)
Power supply				3 phase 400V(380V-415V) 50Hz
Electrical characteristics	Cooling	Running current(380-415V)	A	10.26-9.40
		Power input	kW	6.35
		EER		3.15
	Heating	Running current(380-415V)	A	10. 3-9.34
		Power input	kW	6.31
		COP		3.55
		Maximum current	A	18.0
Indoor unit				
Model name				RAV-SM567MUT-E
Appearance	Main unit			Zinc hot dipping steel plate * Heat-insulating material attached to only upper plate
	Ceiling panel (Sold separately)	Model name		RBC-UM21PG(W)-E
		Panel color		Gran White (Mansell 5PB9/1)
Outer dimension	Main unit	Height	mm	256
		Widh	mm	575
		Depth	mm	575
	Ceiling panel (Sold separately)	Height	mm	12
		Widh	mm	620
		Depth	mm	620
Total weight	Main unit		kg	15.0
	Ceiling panel		kg	2.5
Heat exchanger				Finned tube
Fan unit	Type			Turbo fan
	Standard air flow	H / M+ / M / L+ / L	m^3/min	798/720/672/562/546
	Motor output		W	60
Sound pressure level		H / M+ / M / L+ / L	dB(A)	44 / 42 / 39 / 36 / 35
Sound power level		H / M+ / M / L+ / L	dB(A)	59 / 57 / 54 / 51 / 50
Drain port				VP20 (Polyvinyl chloride tube)
Air filter				Standard filter (Long life filter)
Branch-kit				RBC-TWP101E
Outdoor unit				
Piping	Standard length		m	7.5
	Minimum length		m	5.0
	Maximum total length		m	100.0
	Regrigerant chargeless length		m	30.0
	Maximum high difference		m	30.0
	Main pipe	Gas	mm	28.6
		Liquid	mm	12.7
	Branch pipe 1	Gas	mm	15.9
		Liquid	mm	9.5
	Branch pipe 2	Gas	mm	-
		Liquid	mm	-
Fan unit	Type			Propeller fan
	Standard air flow		m^3/min	153
	Fan moter output		W	200+200
Sound pressure level		Cooling/Heating	dB(A)	58/60
Sound power level		Cooling/Heating	dB(A)	76/76
Operation range		Cooling	DBC	-15 to 52
		Heating	WBC	-27 to 15

*1 : The Cooling capacity and electrical characteristics are measured under the conditions specified by JIS B 8615-1 based on the reference piping.
The reference piping consists of 5m of main piping and 2.5m of branch piping connected with 0 meter height.
*2 : The sound lebel are measured in an anechoic chamber in accordance with JIS B 8616. Normally, the values measured in the actual operatin enviroment become larger than the indicated values due to the effects of external sound.
*3 : Height from the ceiling. Depth doesn't include the Erectric parts box.

Notes ;
Rated conditions
Cooling : Indoor air temperature 27°CDB/ 19 °CWB, Outdoor air temperature 35°CDB
Heating : Indoor air temperature 20°CDB, Outdoor air temperature 7°CDB/ 6 °CWB

Indoor unit (Ducted type (-E))

Model	**Indoor unit**			**RAV-SM1406BTP-E**
				RAV-SM1406BTP-E
	Outdoor unit			**RAV-SM2806AT8-E**
Cooling capacity			kW	23.5(4.6-27.0)
Heating capacity			kW	27.0(4.6-31.5)
Power supply				3 phase 400V(380V-415V) 50Hz
Electrical characteristics	Cooling	Running current(380-415V)	A	14.49 - 13.27
		Power input	kW	8.87
		EER		2.65
	Heating	Running current(380-415V)	A	12.60 - 11.53
		Power input	kW	7.71
		COP		3.50
		Maximum current	A	23.0
Indoor unit				
Model name				RAV-SM1406BTP-E
Appearance				Zinc hot dipping steel plate
Outer dimension		Height	mm	275
		Widh	mm	1,400
		Depth	mm	750
Total weight			kg	40
Heat exchanger				Finned tube
Fan unit	Type			Centrifugal fan
	Standard air flow	H/M/L	m^3/min	35.0/29.0/25.0
	Motor output		W	250
	External static pressure (Standard(Upper-Lower))		Pa	50(130-30)
Sound pressure level		H/M/L	dB(A)	40/36/33
Sound power level		H/M/L	dB(A)	55/51/48
Drain port				VP25
Branch-kit				RBC-TWP101E
Outdoor unit				
Piping	Standard length		m	7.5
	Minimum length		m	5.0
	Maximum total length		m	100.0
	Regrigerant chargeless length		m	30.0
	Maximum high difference		m	30.0
	Main pipe	Gas	mm	28.6
		Liquid	mm	12.7
	Branch pipe 1	Gas	mm	15.9
		Liquid	mm	9.5
	Branch pipe 2	Gas	mm	-
		Liquid	mm	-
Fan unit	Type			Propeller fan
	Standard air flow		m^3/min	182
	Fan moter output		W	200+200
Sound pressure level		Cooling/Heating	dB(A)	61/63
Sound power level		Cooling/Heating	dB(A)	78/80
Operation range		Cooling	DBC	-15 to 52
		Heating	WBC	-27 to 15

*1 : The Cooling capacity and electrical characteristics are measured under the conditions specified by JIS B 8615-1 based on the reference piping.
The reference piping consists of 5m of main piping and 2.5m of branch piping connected with 0 meter height.

*2 : The sound lebel are measured in an anechoic chamber in accordance with JIS B 8616. Normally, the values measured in the actual operatin enviroment become larger than the indicated values due to the effects of external sound.

*3 : Height from the ceiling. Depth doesn't include the Erectric parts box.

Notes ;

Rated conditions
Cooling : Indoor air temperature 27°CDB/ 19 °CWB, Outdoor air temperature 35°CDB
Heating : Indoor air temperature 20°CDB, Outdoor air temperature 7°CDB/ 6 °CWB

Indoor unit (Ducted type (-E1))

Model	**Indoor unit**			**RAV-SM1106BTP-E1**	**RAV-SM806BTP-E1**	**RAV-SM806BTP-E1**	**RAV-SM566BTP-E1**	**RAV-SM806BTP-E1**
				RAV-SM1106BTP-E1	**RAV-SM806BTP-E1**	**RAV-SM806BTP-E1**	**RAV-SM566BTP-E1**	**RAV-SM806BTP-E1**
				-	**RAV-SM806BTP-E1**	**RAV-SM806BTP-E1**	**RAV-SM566BTP-E1**	**RAV-SM806BTP-E1**
				-	**-**	**-**	**RAV-SM566BTP-E1**	**RAV-SM806BTP-E1**
	Outdoor unit			**RAV-SM2246AT8-E**	**RAV-SM2246AT8-E**	**RAV-SM2806AT8-E**	**RAV-SM2246AT8-E**	**RAV-SM2806AT8-E**
Cooling capacity			kW	20.0(4.6-22.4)	20.0(4.6-22.4)	23.5(4.6-27.0)	20.0(4.6-22.4)	23.5(4.6-27.0)
Heating capacity			kW	22.4(4.6-25.0)	22.4(4.6-25.0)	27.0(4.6-31.5)	22.4(4.6-25.0)	27.0(4.6-31.5)
Power supply				3 phase 400V(380V-415V) 50Hz				
Electrical characteristics	Cooling	Running current(380-415V)	A	9.97 - 9.13	9.97 - 9.13	14.49 - 13.27	9.97 - 9.13	14.49 - 13.27
		Power input	kW	6.17	6.17	8.87	6.17	8.87
		EER		3.24	3.24	2.65	3.24	2.65
	Heating	Running current(380-415V)	A	9.28 - 8.50	9.28 - 8.50	12.60 - 11.53	9.28 - 8.50	12.60 - 11.53
		Power input	kW	5.74	5.74	7.71	5.74	7.71
		COP		3.90	3.90	3.50	3.90	3.50
		Maximum current	A	18.0	18.0	23.0	18.0	23.0
Indoor unit								
Model name				RAV-SM1106BTP-E1	RAV-SM806BTP-E1	RAV-SM806BTP-E1	RAV-SM566BTP-E1	RAV-SM806BTP-E1
Appearance				Zinc hot dipping steel plate				
Outer dimension	Height		mm	275	275	275	275	275
	Widh		mm	1,400	1,000	1,000	700	1,000
	Depth		mm	750	750	750	750	750
Total weight			kg	40	30	30	23	30
Heat exchanger				Finned tube				
Fan unit	Type			Centrifugal fan	Centrifugal fan	Centrifugal fan	Centrifugal fan	Centrifugal fan
	Standard air flow	H/M/L	m^3/min	35.0/29.0/25.0	20.0/16.5/14.5	20.0/16.5/14.5	13.3/11.0/9.0	20.0/16.5/14.5
	Motor output		W	250	150	150	150	150
	External static pressure (Standard(Upper-Lower))		Pa	50(130-30)	30(120-30)	30(120-30)	30(120-30)	30(120-30)
Sound pressure level		H/M/L	dB(A)	40/36/33	34/30/26	34/30/26	33/29/25	34/30/26
Sound power level		H/M/L	dB(A)	55/51/48	49/45/41	49/45/41	48/44/40	49/45/41
Drain port				VP25	VP25	VP25	VP25	VP25
Branch-kit				RBC-TWP101E	RBC-TRP100E	RBC-TRP100E	RBC-DTWP101E	RBC-DTWP101E
Outdoor unit								
Piping	Standard length		m	7.5	7.5	7.5	7.5	7.5
	Minimum length		m	5.0	5.0	5.0	5.0	5.0
	Maximum total length		m	100.0	100.0	100.0	100.0	100.0
	Regrigerant chargeless length		m	30.0	30.0	30.0	30.0	30.0
	Maximum high difference		m	30.0	30.0	30.0	30.0	30.0
	Main pipe	Gas	mm	28.6	28.6	28.6	28.6	28.6
		Liquid	mm	12.7	12.7	12.7	12.7	12.7
	Branch pipe 1	Gas	mm	15.9	15.9	15.9	15.9	15.9
		Liquid	mm	9.5	9.5	9.5	9.5	9.5
	Branch pipe 2	Gas	mm	-	-	-	12.7	15.9
		Liquid	mm	-	-	-	6.4	9.5
Fan unit	Type			Propeller fan				
	Standard air flow		m^3/min	153	153	182	153	182
	Fan moter output		W	200+200	200+200	200+200	200+200	200+200
Sound pressure level		Cooling/Heating	dB(A)	58/60	58/60	61/63	58/60	61/63
Sound power level		Cooling/Heating	dB(A)	76/76	76/76	78/80	76/76	78/80
Operation range		Cooling	DBC	-15 to 52				
		Heating	WBC	-27 to 15				

*1 : The Cooling capacity and electrical characteristics are measured under the conditions specified by JIS B 8615-1 based on the reference piping.
The reference piping consists of 5m of main piping and 2.5m of branch piping connected with 0 meter height.
*2 : The sound lebel are measured in an anechoic chamber in accordance with JIS B 8616. Normally, the values measured in the actual operatin enviroment become larger than the indicated values due to the effects of external sound.
*3 : Height from the ceiling. Depth doesn't include the Erectric parts box.

Notes ;
Rated conditions
Cooling : Indoor air temperature 27°CDB/ 19 °CWB, Outdoor air temperature 35°CDB
Heating : Indoor air temperature 20°CDB, Outdoor air temperature 7°CDB/ 6 °CWB

Indoor unit (Slim Duct Type)

Model	**Indoor unit**			**RAV-SM564SDT-E**
				RAV-SM564SDT-E
				RAV-SM564SDT-E
				RAV-SM564SDT-E
	Outdoor unit			**RAV-SM2246AT8-E**
Cooling capacity			kW	20.0(4.6-22.4)
Heating capacity			kW	22.4(4.6-25.0)
Power supply				3 phase 400V(380V-415V) 50Hz
Electrical characteristics	Cooling	Running current(380-415V)	A	10.78/9.87
		Power input	kW	6.67
		EER		3.00
	Heating	Running current(380-415V)	A	10.20/9.34
		Power input	kW	6.31
		COP		3.55
		Maximum current	A	18.0
Indoor unit				
Model name				RAV-SM564SDT-E
Appearance				Zinc hot dipping steel plate
Outer dimension		Height	mm	210
		Widh	mm	845
		Depth	mm	645
Total weight			kg	22
Heat exchanger				Finned tube
Fan unit	Type			Centrifugal fan
	Standard air flow	H/M/L	m^3/min	13.0/11.3/9.7
	Motor output		W	60
	External static pressure (Standard(Upper-Lower))		Pa	4(24-0)
Sound pressure level		H/M/L	dB(A)	45/40/36
Sound power level		H/M/L	dB(A)	60/55/51
Drain port				VP25
Branch-kit				RBC-TWP101E
Outdoor unit				
Piping	Standard length		m	7.5
	Minimum length		m	5.0
	Maximum total length		m	100.0
	Regrigerant chargeless length		m	30.0
	Maximum high difference		m	30.0
	Main pipe	Gas	mm	28.6
		Liquid	mm	12.7
	Branch pipe 1	Gas	mm	15.9
		Liquid	mm	9.5
	Branch pipe 2	Gas	mm	-
		Liquid	mm	-
Fan unit	Type			Propeller fan
	Standard air flow		m^3/min	153
	Fan moter output		W	200+200
Sound pressure level		Cooling/Heating	dB(A)	58/60
Sound power level		Cooling/Heating	dB(A)	76/76
Operation range		Cooling	DBC	-15 to 52
		Heating	WBC	-27 to 15

*1 : The Cooling capacity and electrical characteristics are measured under the conditions specified by JIS B 8615-1 based on the reference piping.
The reference piping consists of 5m of main piping and 2.5m of branch piping connected with 0 meter height.
*2 : The sound lebel are measured in an anechoic chamber in accordance with JIS B 8616. Normally, the values measured in the actual operatin enviroment become larger than the indicated values due to the effects of external sound.
*3 : Height from the ceiling. Depth doesn't include the Erectric parts box.

Notes ;
Rated conditions
Cooling : Indoor air temperature 27°CDB/ 19 °CWB, Outdoor air temperature 35°CDB
Heating : Indoor air temperature 20°CDB, Outdoor air temperature 7°CDB/ 6 °CWB

Indoor unit (High static duct Type)

Model	Indoor unit			RAV-SM2244DTP-E	RAV-SM2804DTP-E
	Outdoor unit			RAV-SM2246AT8-E	RAV-SM2806AT8-E
Cooling capacity			kW	19.0(4.6-22.4)	22.5(4.6-27.0)
Heating capacity			kW	22.4(4.6-25.0)	27.0(4.6-31.5)
Power supply				3 phase 400V(380V-415V) 50Hz	
Electrical characteristics	Cooling	Running current(380-415V)	A	9.47 - 8.67	13.04 - 11.94
		Power input	kW	5.86	7.98
		EER		3.24	2.82
	Heating	Running current(380-415V)	A	9.52 - 8.72	12.71 - 11.64
		Power input	kW	5.89	7.78
		COP		3.80	3.47
		Maximum current	A	18.0	23.0
Indoor unit					
Model name				RAV-SM2244DTP-E	RAV-SM2804DTP-E
Appearance				Zinc hot dipping steel plate	
Outer dimension		Height	mm	448	448
		Widh	mm	1,400	1,400
		Depth	mm	900	900
Total weight			kg	97	97
Heat exchanger				Finned tube	
Fan unit	Type			Centrifugal fan	Centrifugal fan
	Standard air flow	H/M/L	m^3/min	63.3/53.3/41.7	80.0/70.0/58.3
	Motor output		W	1000	1000
	External static pressure (Standard(Upper-Lower))		Pa	150(250-50)	150(250-50)
Sound pressure level		H/M/L	dB(A)	44/40/36	46/42/38
Sound power level		H/M/L	dB(A)	79/75/71	81/77/73
Drain port				VP25	VP25
Branch-kit				RBC-TRP100E	RBC-TRP100E
Outdoor unit					
Piping	Standard length		m	7.5	7.5
	Minimum length		m	5.0	5.0
	Maximum total length		m	100.0	100.0
	Regrigerant chargeless length		m	30.0	30.0
	Maximum high difference		m	30.0	30.0
	Main pipe	Gas	mm	28.6	28.6
		Liquid	mm	12.7	12.7
	Branch pipe 1	Gas	mm	15.9	15.9
		Liquid	mm	9.5	9.5
	Branch pipe 2	Gas	mm	-	-
		Liquid	mm	-	-
Fan unit	Type			Propeller fan	
	Standard air flow		m^3/min	153	182
	Fan moter output		W	200+200	200+200
Sound pressure level		Cooling/Heating	dB(A)	58/60	61/63
Sound power level		Cooling/Heating	dB(A)	76/76	78/80
Operation range		Cooling	DBC	-15 to 52	
		Heating	WBC	-27 to 15	

*1 : The Cooling capacity and electrical characteristics are measured under the conditions specified by JIS B 8615-1 based on the reference piping.
The reference piping consists of 5m of main piping and 2.5m of branch piping connected with 0 meter height.

*2 : The sound lebel are measured in an anechoic chamber in accordance with JIS B 8616. Normally, the values measured in the actual operatin enviroment become larger than the indicated values due to the effects of external sound.

*3 : Height from the ceiling. Depth doesn't include the Erectric parts box.

Notes ;

Rated conditions

Cooling : Indoor air temperature 27°CDB/ 19 °CWB, Outdoor air temperature 35°CDB

Heating : Indoor air temperature 20°CDB, Outdoor air temperature 7°CDB/ 6 °CWB

Indoor unit (Ceiling Type)

Model	**Indoor unit**			**RAV-SM1108CTP-E**	**RAV-SM1408CTP-E**	**RAV-SM808CTP-E**	**RAV-SM808CTP-E**	**RAV-SM568CTP-E**	**RAV-SM808CTP-E**
				RAV-SM1108CTP-E	**RAV-SM1408CTP-E**	**RAV-SM808CTP-E**	**RAV-SM808CTP-E**	**RAV-SM568CTP-E**	**RAV-SM808CTP-E**
				-	**-**	**RAV-SM808CTP-E**	**RAV-SM808CTP-E**	**RAV-SM568CTP-E**	**RAV-SM808CTP-E**
				-	**-**	**-**	**-**	**RAV-SM568CTP-E**	**RAV-SM808CTP-E**
	Outdoor unit			**RAV-SM2246AT8-E**	**RAV-SM2806AT8-E**	**RAV-SM2246AT8-E**	**RAV-SM2806AT8-E**	**RAV-SM2246AT8-E**	**RAV-SM2806AT8-E**
Cooling capacity			kW	20.0(4.6-22.4)	23.5(4.6-27.0)	20.0(4.6-22.4)	23.5(4.6-27.0)	20.0(4.6-22.4)	23.5(4.6-27.0)
Heating capacity			kW	22.4(4.6-25.0)	27.0(4.6-31.5)	22.4(4.6-25.0)	27.0(4.6-31.5)	22.4(4.6-25.0)	27.0(4.6-31.5)
Power supply				3 phase 400V(380V-415V) 50Hz					
Electrical characteristics	Cooling	Running current (380-415V)	A	9.97 -9.13	14.65 - 13.42	9.97 - 9.13	14.65 - 13.42	9.97 - 9.13	14.65 - 13.42
		Power input	kW	6.17	8.97	6.17	8.97	6.17	8.97
		EER		3.24	2.62	3.24	2.62	3.24	2.62
	Heating	Running current (380-415V)	A	9.52 - 8.72	12.79 - 11.71	9.52 - 8.72	12.79 - 11.71	9.52 - 8.72	12.79 - 11.71
		Power input	kW	5.89	7.83	5.89	7.83	5.89	7.83
		COP		3.80	3.45	3.80	3.45	3.80	3.45
		Maximum current	A	18.0	23.0	18.0	23.0	18.0	23.0
Indoor unit									
Model name				RAV-SM1108CTP-E	RAV-SM1408CTP-E	RAV-SM808CTP-E	RAV-SM808CTP-E	RAV-SM568CTP-E	RAV-SM808CTP-E
Outer dimension		Height	mm	235	235	235	235	235	235
		Widh	mm	1,586	1,586	1,270	1,270	950	1,270
		Depth	mm	690	690	690	690	690	690
Total weight			kg	37	37	29	29	23	29
Heat exchanger				Finned tube					
Fan unit	Type			Centrifugal fan	Centrifugal fan	Centrifugal fan	Centrifugal fan	Centrifugal fan	Centrifugal fan
	Standard air flow	H/M/L	m^3/min	31.0/22.5/17.0	34.0/25.5/20.0	23.5/16.7/12.5	23.5/16.7/12.5	15.0/12.0/9.0	23.5/16.7/12.5
	Motor output		W	139	139	94	94	94	94
Sound pressure level		H/M/L	dB(A)	44/38/32	46/41/35	41/36/29	41/36/29	37/35/28	41/36/29
Sound power level		H/M/L	dB(A)	59/53/47	61/56/50	56/51/44	56/51/44	52/50/43	56/51/44
Drain port				VP20	VP20	VP20	VP20	VP20	VP20
Branch-kit				RBC-TWP101E	RBC-TWP101E	RBC-TRP100E	RBC-TRP100E	RBC-DTWP101E	RBC-DTWP101E
Outdoor unit									
Piping	Standard length		m	7.5	7.5	7.5	7.5	7.5	7.5
	Minimum length		m	5.0	5.0	5.0	5.0	5.0	5.0
	Maximum total length		m	100.0	100.0	100.0	100.0	100.0	100.0
	Regrigerant chargeless length		m	30.0	30.0	30.0	30.0	30.0	30.0
	Maximum high difference		m	30.0	30.0	30.0	30.0	30.0	30.0
	Main pipe	Gas	mm	28.6	28.6	28.6	28.6	28.6	28.6
		Liquid	mm	12.7	12.7	12.7	12.7	12.7	12.7
	Branch pipe 1	Gas	mm	15.9	15.9	15.9	15.9	15.9	15.9
		Liquid	mm	9.5	9.5	9.5	9.5	9.5	9.5
	Branch pipe 2	Gas	mm	-	-	-	-	12.7	15.9
		Liquid	mm	-	-	-	-	6.4	9.5
Fan unit	Type			Propeller fan					
	Standard air flow		m^3/min	153	182	153	182	153	182
	Fan moter output		W	200+200	200+200	200+200	200+200	200+200	200+200
Sound pressure level		Cooling/ Heating	dB(A)	58/60	61/63	58/60	61/63	58/60	61/63
Sound power level		Cooling/ Heating	dB(A)	76/76	78/80	76/76	78/80	76/76	78/80
Operation range		Cooling	DBC	-15 to 52					
		Heating	WBC	-27 to 15					

*1 : The Cooling capacity and electrical characteristics are measured under the conditions specified by JIS B 8615-1 based on the reference piping.
The reference piping consists of 5m of main piping and 2.5m of branch piping connected with 0 meter height.

*2 : The sound lebel are measured in an anechoic chamber in accordance with JIS B 8616. Normally, the values measured in the actual operatin enviroment become larger than the indicated values due to the effects of external sound.

*3 : Height from the ceiling. Depth doesn't include the Erectric parts box.

Notes ;

Rated conditions

Cooling : Indoor air temperature 27°CDB/ 19 °CWB, Outdoor air temperature 35°CDB

Heating : Indoor air temperature 20°CDB, Outdoor air temperature 7°CDB/ 6 °CWB

Indoor unit (High wall Type)

Model	**Indoor unit**			**RAV-SM806KRT-E**	**RAV-SM806KRT-E**	**RAV-SM566KRT-E**	**RAV-SM806KRT-E**
				RAV-SM806KRT-E	**RAV-SM806KRT-E**	**RAV-SM566KRT-E**	**RAV-SM806KRT-E**
				RAV-SM806KRT-E	**RAV-SM806KRT-E**	**RAV-SM566KRT-E**	**RAV-SM806KRT-E**
				-	**-**	**RAV-SM566KRT-E**	**RAV-SM806KRT-E**
	Outdoor unit			**RAV-SM2246AT8-E**	**RAV-SM2806AT8-E**	**RAV-SM2246AT8-E**	**RAV-SM2806AT8-E**
Cooling capacity			kW	20.0(4.6-22.4)	23.5(4.6-27.0)	20.0(4.6- 22.4)	23.5(4.6-27.0)
Heating capacity			kW	22.4(4.6-25.0)	27.0(4.6-31.5)	22.4(4.6-25.0)	27.0(4.6-31.5)
Power supply				3 phase 400V(380V-415V) 50Hz			
Electrical characteristics	Cooling	Running current(380-415V)	A	10.78 - 9.87	15.06 - 13.79	10.78 - 9.87	15.06 - 13.79
		Power input	kW	6.67	9.22	6.67	9.22
		EER		3.00	2.55	3.60	2.55
	Heating	Running current(380-415V)	A	10.20 - 9.34	12.94 - 11.85	10.20 - 9.34	12.94 - 11.85
		Power input	kW	6.31	7.92	6.31	7.92
		COP		3.55	3.41	4.10	3.41
		Maximum current	A	18.0	23.0	18.0	23.0
Indoor unit							
Model name				RAV-SM806KRT-E	RAV-SM806KRT-E	RAV-SM566KRT-E	RAV-SM806KRT-E
Outer dimension		Height	mm	320	320	320	320
		Widh	mm	1,050	1,050	1,050	1,050
		Depth	mm	228	228	228	228
Total weight			kg	12	12	12	12
Heat exchanger				Finned tube			
Fan unit	Type			Cross flow fan	Cross flow fan	Cross flow fan	Cross flow fan
	Standard air flow	H/M/L	m^3/min	17.0/12.5/11.0	17.0/12.5/11.0	14.0/12.5/11.0	17.0/12.5/11.0
	Motor output		W	30	30	30	30
Sound pressure level		H/M/L	dB(A)	47/41/36	47/41/36	42/39/36	47/41/36
Sound power level		H/M/L	dB(A)	62/56/51	62/56/51	57/54/51	62/56/51
Packed controler				WH-L11SE	WH-L11SE	WH-L11SE	WH-L11SE
Drain port				VP16	VP16	VP16	VP16
Branch-kit				RBC-TRP100E	RBC-TRP100E	RBC-DTWP101E	RBC-DTWP101E
Outdoor unit							
Piping	Standard length		m	7.5	7.5	7.5	7.5
	Minimum length		m	5.0	5.0	5.0	5.0
	Maximum total length		m	100.0	100.0	100.0	100.0
	Regrigerant chargeless length		m	30.0	30.0	30.0	30.0
	Maximum high difference		m	30.0	30.0	30.0	30.0
	Main pipe	Gas	mm	28.6	28.6	28.6	28.6
		Liquid	mm	12.7	12.7	12.7	12.7
	Branch pipe 1	Gas	mm	15.9	15.9	15.9	15.9
		Liquid	mm	9.5	9.5	9.5	9.5
	Branch pipe 2	Gas	mm	-	-	12.7	15.9
		Liquid	mm	-	-	6.4	9.5
Fan unit	Type			Propeller fan			
	Standard air flow		m^3/min	153	182	153	182
	Fan moter output		W	200+200	200+200	200+200	200+200
Sound pressure level		Cooling/Heating	dB(A)	58/60	61/63	58/60	61/63
Sound power level		Cooling/Heating	dB(A)	76/76	78/80	76/76	78/80
Operation range		Cooling	DBC	-15 to 52		-15 to 52	
		Heating	WBC	-27 to 15		-27 to 15	

*1 : The Cooling capacity and electrical characteristics are measured under the conditions specified by JIS B 8615-1 based on the reference piping.
The reference piping consists of 5m of main piping and 2.5m of branch piping connected with 0 meter height.
*2 : The sound lebel are measured in an anechoic chamber in accordance with JIS B 8616. Normally, the values measured in the actual operatin enviroment become larger than the indicated values due to the effects of external sound.
*3 : Height from the ceiling. Depth doesn't include the Erectric parts box.

Notes ;
Rated conditions
Cooling : Indoor air temperature 27°CDB/ 19 °CWB, Outdoor air temperature 35°CDB
Heating : Indoor air temperature 20°CDB, Outdoor air temperature 7°CDB/ 6 °CWB

Outdoor unit

	Outdoor			RAV-SM2246AT8-E	RAV-SM2806AT8-E
Power supply				3 phase 400V(380V-415V) 50Hz	
Compressor	Type			DC Twin Rotary	DC Twin Rotary
Refrigerant chrged			kg	5.9	5.9
Piping	Standard length		m	7.5	7.5
	Minimum length		m	5.0	5.0
	Maximum total length		m	100.0	100.0
	Refrigerant chargeless length		m	30.0	30.0
	Maximum hight difference		m	30.0	30.0
Dimension	Height		mm	1,550	1,550
	Width		mm	1,010	1,010
	Depth		mm	370	370
Total	weight		kg	142	142
Connecting pipe	Main pipe	Gas side	mm	28.6	28.6
		Liquid side	mm	12.7	12.7
Fan unit	Type			Propeller fan	
	Air flow		m^3/min	153	182
	Fan motor output		W	200+200	200+200
Sound pressure level	Cooling/Heating		dB(A)	58/60	61/63
Sound power level	Cooling/Heating		dB(A)	76/76	78/80
Operational temperature range	Cooling		DBC	-15 to 52	-15 to 52
	Heating		WBC	-27 to 15	-27 to 15

*1 : The Cooling capacity and electrical characteristics are measured under the conditions specified by JIS B 8615-1 based on the reference piping.
The reference piping consists of 5m of main piping and 2.5m of branch piping connected with 0 meter height.
*2 : The sound lebel are measured in an anechoic chamber in accordance with JIS B 8616. Normally, the values measured in the actual operatin enviroment become larger than the indicated values due to the effects of external sound.
*3 : Height from the ceiling. Depth doesn't include the Erectric parts box.

Notes ;
Rated conditions
Cooling : Indoor air temperature 27°CDB/ 19 °CWB, Outdoor air temperature 35°CDB
Heating : Indoor air temperature 20°CDB, Outdoor air temperature 7°CDB/ 6 °CWB

1-2. Dimension

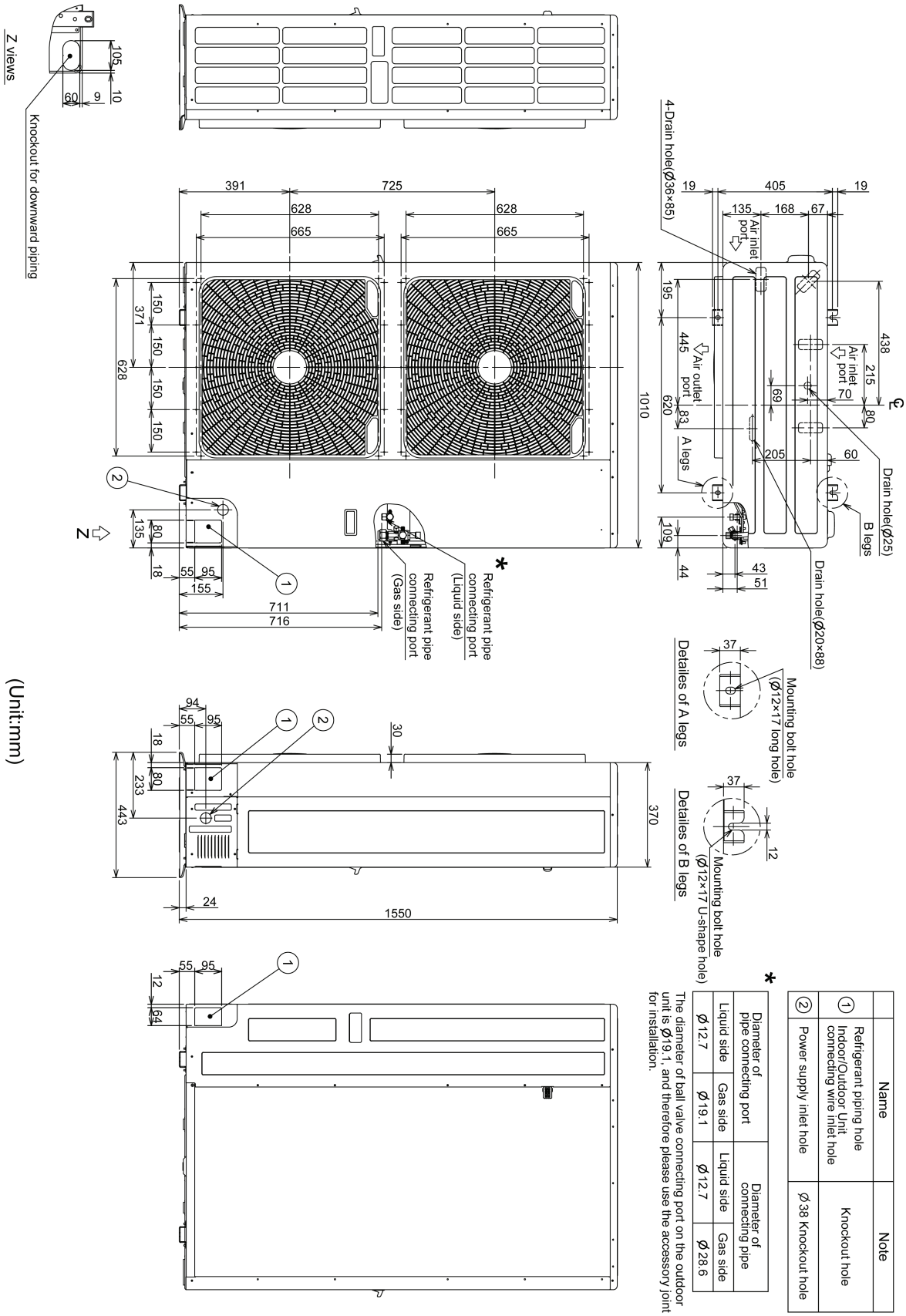

(Unit:mm)

	Name	Note
①	Refrigerant piping hole Indoor/Outdoor Unit connecting wire inlet hole	Knockout hole
②	Power supply inlet hole	Ø38 Knockout hole

*

Diameter of pipe connecting port		Diameter of connecting pipe	
Liquid side	Gas side	Liquid side	Gas side
Ø12.7	Ø19.1	Ø12.7	Ø28.6

The diameter of ball valve connecting port on the outdoor unit is Ø19.1, and therefore please use the accessory joint for installation.

1-3. Wiring Diagrams

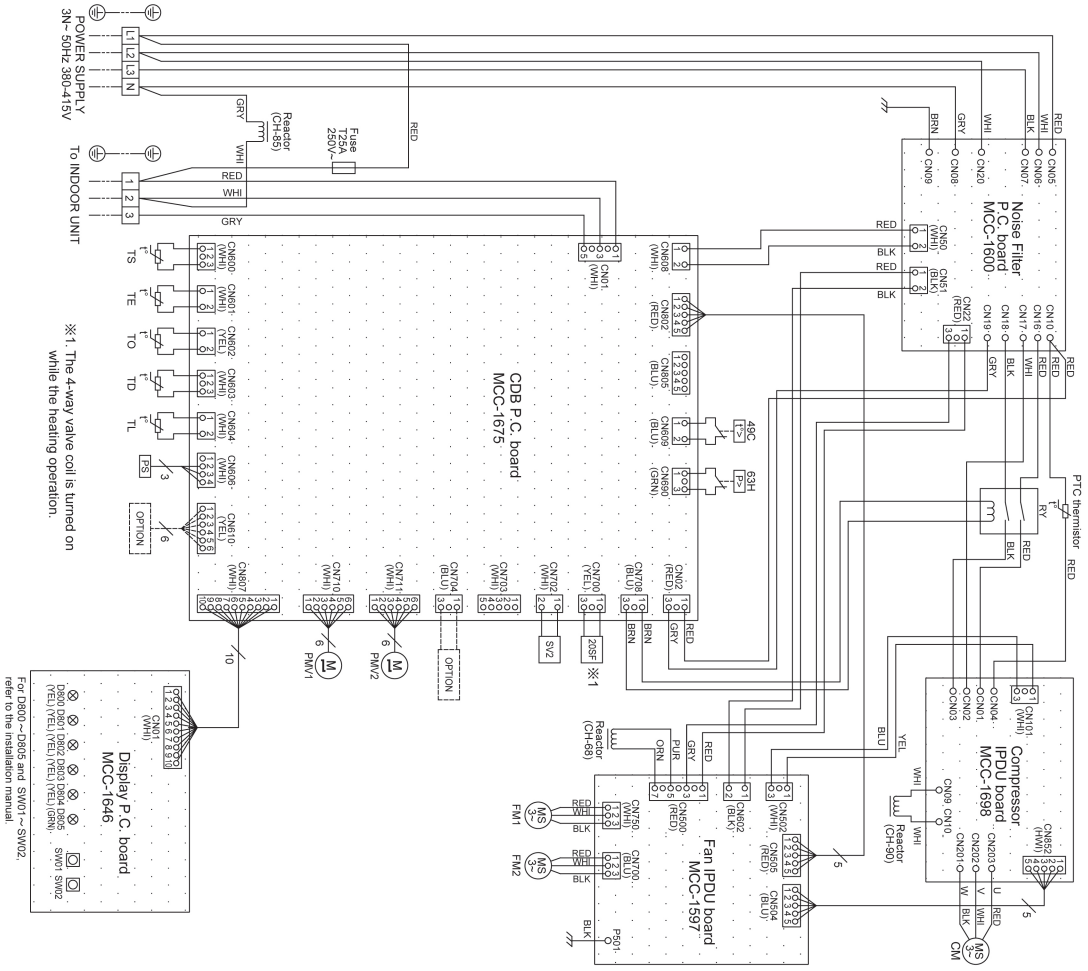

Symbol	Part name
CM	Compressor
FM1,2	Fan motor
PMV1,2	Pulse motor valve
PS	Low-pressure sensor
RY	Relay
SV2	2-way valve coil
TD	Pipe temperature sensor(Discharge)
TS	Pipe temperature sensor(Suction)
TE	Heat exchanger sensor 1
TL	Heat exchanger sensor 2
TO	Outside temperature sensor
20SF	4-way valve coil
49C	Compressor case thermostat
63H	High-pressure switch

	Field wiring
	Protective earth
	Terminal block
	Terminal
	Connector
	P.C.board

Color Indication

BLK : BLACK	GRY : GRAY	RED : RED	PUR : PURPLE
BLU : BLUE	BRN : BROWN	YEL : YELLOW	ORN : ORANGE
WHI : WHITE	GRN : GREEN		

1-4. Refrigerant Cycle Diagram

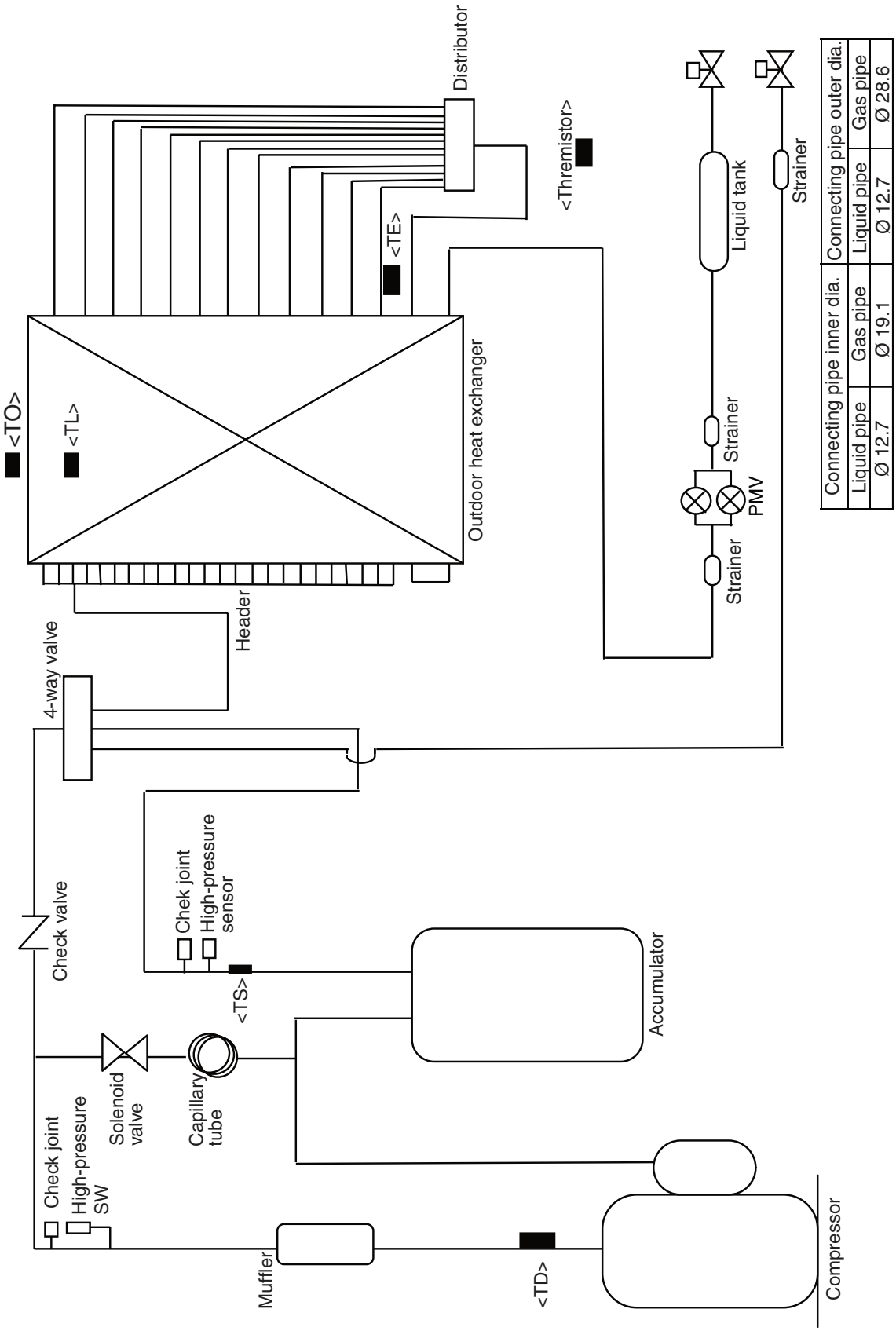

Connecting pipe inner dia.		Connecting pipe outer dia.	
Liquid pipe	Gas pipe	Liquid pipe	Gas pipe
Ø 12.7	Ø 19.1	Ø 12.7	Ø 28.6

1-5. Sensible Capacity Table

Digital Inverter 4 Series Sensible Heat Capacity : RAV-SM***DT-E

indoor air temp.																			
unit size	outdoor air temp. CDB	14.0CWB 20.0CDB		15.0CWB 21.5CDB		16.0CWB 23.0CDB		17.0CWB 24.5CDB		18.0CWB 26.0CDB		19.0CWB 27.0CDB		20.0CWB 28.0CDB		22.0CWB 30.0CDB		24.0CWB 32.0CDB	
		TC	SHC	TC	SHC	TC	SHC	TC	SHC	TC	SHC	TC	SHC	TC	SHC	TC	SHC	TC	SHC
2246	10.0	21.7	16.2	22.9	16.7	23.8	17.1	25.0	17.5	25.9	17.9	26.1	18.4	26.4	18.7	29.5	19.2	30.1	19.6
	12.0	21.2	16.1	22.4	16.6	23.3	16.9	24.4	17.3	25.6	17.7	25.5	18.2	26.0	18.5	28.7	19.0	29.5	19.4
	14.0	20.7	16.0	21.9	16.4	22.8	16.7	23.9	17.1	25.0	17.5	25.0	17.9	25.6	18.3	28.0	18.8	28.9	19.2
	16.0	20.4	15.8	21.4	16.2	22.3	16.5	23.4	16.9	24.4	17.3	24.4	17.7	25.1	18.1	27.3	18.6	28.3	19.0
	18.0	20.0	15.6	20.9	16.0	21.8	16.3	22.8	16.7	23.8	17.1	23.9	17.5	24.7	17.9	26.6	18.4	27.8	18.8
	20.0	19.7	15.5	20.4	15.8	21.3	16.1	22.3	16.5	23.1	16.9	23.4	17.3	24.3	17.7	25.9	17.2	27.2	18.6
	21.0	19.3	15.4	20.2	15.7	21.1	16.0	22.1	16.4	22.8	16.8	23.0	17.1	24.1	17.5	25.5	18.0	26.9	18.4
	23.0	18.9	15.2	19.7	15.5	20.6	15.8	21.5	16.3	22.2	16.6	22.5	16.9	23.7	17.4	24.8	17.8	26.3	18.2
	25.0	18.5	15.1	19.2	15.4	20.1	15.7	21.0	16.0	21.6	16.4	21.9	16.7	23.2	17.1	24.0	17.6	25.7	18.0
	27.0	17.8	14.9	18.7	15.3	19.6	15.5	20.5	15.8	21.0	16.2	20.9	16.4	22.8	16.9	23.3	17.2	25.1	17.8
	29.0	17.6	14.7	18.2	15.1	19.0	15.4	19.9	15.6	20.4	15.9	20.8	16.1	22.4	16.6	22.6	17.1	24.6	17.6
	31.0	17.2	14.6	17.7	14.9	18.5	15.2	19.4	15.4	19.8	15.7	20.2	16.0	21.9	16.5	22.0	17.0	24.0	17.4
	33.0	16.7	14.5	17.2	14.7	18.0	15.0	18.9	15.2	19.2	15.4	19.7	15.7	21.2	16.2	21.5	16.7	23.4	17.2
	35.0	16.3	14.4	16.7	14.5	17.5	14.8	18.3	15.0	18.6	15.2	19.0	15.4	20.4	16.0	21.1	16.5	22.8	17.0
	37.0	15.9	14.2	16.2	14.4	17.0	14.6	17.8	14.8	17.9	15.0	18.5	15.3	19.7	15.8	20.7	16.3	22.3	16.8
	39.0	15.5	14.0	15.7	14.2	16.5	14.4	17.3	14.6	17.3	14.8	18.0	15.0	19.0	15.5	20.3	15.8	21.7	16.6

indoor air temp.																			
unit size	outdoor air temp. CDB	14.0CWB 20.0CDB		15.0CWB 21.5CDB		16.0CWB 23.0CDB		17.0CWB 24.5CDB		18.0CWB 26.0CDB		19.0CWB 27.0CDB		20.0CWB 28.0CDB		22.0CWB 30.0CDB		24.0CWB 32.0CDB	
		TC	SHC	TC	SHC	TC	SHC	TC	SHC	TC	SHC	TC	SHC	TC	SHC	TC	SHC	TC	SHC
2806	10.0	25.5	20.1	26.7	20.6	27.6	21.0	28.8	21.4	29.7	21.8	29.9	22.3	30.2	22.6	33.3	23.1	33.9	23.5
	12.0	25.0	20.0	26.2	20.5	27.1	20.8	28.2	21.2	29.4	21.6	29.3	22.1	29.8	22.4	32.5	22.9	33.3	23.3
	14.0	24.5	19.9	25.7	20.3	26.6	20.6	27.7	21.0	28.8	21.4	28.8	21.8	29.4	22.2	31.8	22.7	32.7	23.1
	16.0	24.2	19.7	25.2	20.1	26.1	20.4	27.2	20.8	28.2	21.2	28.2	21.6	28.9	22.0	31.1	22.5	32.1	22.9
	18.0	23.8	19.5	24.7	19.9	25.6	20.2	26.7	20.6	27.6	21.0	27.7	21.4	28.5	21.8	30.4	22.3	31.6	22.7
	20.0	23.5	19.4	24.2	19.7	25.1	20.0	26.1	20.4	26.9	20.8	27.2	21.2	28.1	21.6	29.7	21.1	31.0	22.5
	21.0	23.1	19.3	24.0	19.6	24.9	19.9	25.9	20.3	26.6	20.7	26.8	21.0	27.9	21.4	29.3	21.9	30.7	22.3
	23.0	22.7	19.1	23.5	19.4	24.4	19.7	25.3	20.2	26.0	20.5	26.3	20.8	27.5	21.3	28.6	21.7	30.1	22.1
	25.0	22.3	19.0	23.0	19.3	23.9	19.6	24.8	19.9	25.4	20.3	25.7	20.6	27.0	21.0	27.8	21.5	29.5	21.9
	27.0	21.6	18.8	22.5	19.2	23.4	19.4	24.3	19.7	24.8	20.1	24.7	20.3	26.6	20.8	27.1	21.1	28.9	21.7
	29.0	21.4	18.6	22.0	19.0	22.8	19.3	23.7	19.5	24.2	19.8	24.6	20.0	26.2	20.5	26.4	21.0	28.4	21.5
	31.0	21.0	18.5	21.5	18.8	22.3	19.1	23.2	19.3	23.6	19.6	24.0	19.9	25.7	20.4	25.8	20.9	27.8	21.3
	33.0	20.5	18.4	21.0	18.6	21.8	18.9	22.7	19.1	23.0	19.3	23.5	19.6	25.0	20.1	25.3	20.6	27.2	21.1
	35.0	20.1	18.3	20.5	18.4	21.3	18.7	22.1	18.9	22.4	19.1	22.8	19.3	24.2	19.9	24.9	20.4	26.6	20.9
	37.0	19.7	18.1	20.0	18.3	20.8	18.5	21.6	18.7	21.7	18.9	22.3	19.2	23.5	19.7	24.5	20.2	26.1	20.7
	39.0	19.3	17.9	19.5	18.1	20.3	18.3	21.1	18.5	21.1	18.7	21.8	18.9	22.8	19.4	24.1	19.7	25.5	20.5

TC: Total Capacity [kW]
SHC: Sensible Heat Capacity [kW]

1-6. Part Load Table

Indoor unit: RAV-SM1104UTP-E×2, RAV-SM804UTP-E×3, RAV-SM564UTP-E×4

Outdoor unit: RAV-SM2246AT8-E

	Cooling		Heating	
	Capacity Q(W)	Power consumption W(W)	Capacity Q(W)	Power consumption W(W)
MINIMUM	4600	940	4600	850
RATING	20000	5560	22400	5460

Cooling

Outdoor temperature(°C)		Load(%)									
		100	90	80	70	60	50	40	30	20	10
46	Q	17040	15790	14550	13300	12060	10810	9570	9570	9570	9570
	W	8050	7400	6750	6090	5440	4780	4130	4130	4130	4130
43	Q	17780	16450	15120	13790	12450	11120	9790	9790	9790	9790
	W	6790	6320	5850	5380	4910	4440	3970	3970	3970	3970
40	Q	18130	16780	15430	14090	12740	11390	10040	10040	10040	10040
	W	6270	5860	5450	5040	4630	4220	3810	3810	3810	3810
35	Q	20000	18290	16580	14870	13160	11440	9730	8020	6310	4600
	W	5560	5050	4530	4020	3510	2990	2480	1970	1450	940
30	Q	21040	19260	17480	15700	13910	12130	10350	8570	6790	5010
	W	5280	4790	4310	3820	3340	2850	2370	1880	1390	910
25	Q	22200	20330	18470	16600	14740	12870	11010	9140	7280	5410
	W	4440	4040	3640	3240	2840	2440	2040	1640	840	840
20	Q	23560	21590	19620	17650	15670	13700	11730	9760	7790	5820
	W	3600	3280	2970	2650	2340	2020	1710	1390	1080	760

Heating

Outdoor temperature(°C)		Load(%)									
		100	90	80	70	60	50	40	30	20	10
20	Q	31110	28640	26160	23690	21210	18740	16260	13790	11320	8840
	W	7050	6440	5830	5210	4600	3990	3380	2760	2150	1540
15	Q	27440	25190	22940	20700	18450	16200	13950	11710	9460	7210
	W	6610	6020	5420	4830	4240	3650	3050	2460	1870	1270
10	Q	23770	21750	19730	17710	15690	13660	11640	9620	7600	5580
	W	6170	5600	5020	4450	3880	3300	2730	2160	1580	1010
7	Q	22400	20420	18440	16470	14490	12510	10530	8560	6580	4600
	W	5460	4950	4440	3920	3410	2900	2390	1870	1360	850
5	Q	20110	18310	16520	14720	12930	11130	9330	7540	5740	3950
	W	5340	4830	4320	3810	3300	2790	2280	1770	1250	740
2	Q	17690	15710	13730	11750	9770	7790	7790	7790	7790	7790
	W	5170	4630	4080	3540	3000	2450	2450	2450	2450	2450
0	Q	16530	14760	13000	11230	9470	7700	7700	7700	7700	7700
	W	5050	4530	4000	3470	2940	2410	2410	2410	2410	2410
-5	Q	13780	12680	11570	10470	9360	9360	9360	9360	9360	9360
	W	4770	4310	3850	3400	2940	2940	2940	2940	2940	2940
-7	Q	12730	11870	11010	10150	9290	9290	9290	9290	9290	9290
	W	4650	4160	3680	3190	2700	2700	2700	2700	2700	2700
-10	Q	12450	11520	10600	9670	8750	8750	8750	8750	8750	8750
	W	4480	4020	3560	3100	2640	2640	2640	2640	2640	2640
-15	Q	12210	11170	10120	9080	8040	8040	8040	8040	8040	8040
	W	4190	3780	3370	2960	2550	2550	2550	2550	2550	2550
-20	Q	8910	8040	7170	6300	5430	5430	5430	5430	5430	5430
	W	3900	3530	3170	2800	2440	2440	2440	2440	2440	2440

Indoor unit: RAV-SM1404UTP-E×2, RAV-SM804UTP-E×3, RAV-SM804UTP-E×4

Outdoor unit: RAV-SM2806AT8-E

	Cooling		Heating	
	Capacity Q(W)	Power consumption W(W)	Capacity Q(W)	Power consumption W(W)
MINIMUM	4600	1010	4600	930
RATING	23500	8970	27000	7830

Cooling

Outdoor temperature(°C)		Load(%)									
		100	90	80	70	60	50	40	30	20	10
46	Q	17440	17440	17440	15010	13520	12050	10570	10570	10570	10570
	W	6650	6650	6650	6170	5680	4490	3290	3290	3290	3290
43	Q	21990	19890	17780	14980	14050	12420	10790	10790	10790	10790
	W	9580	7690	6790	5890	5000	4100	3200	3200	3200	3200
40	Q	22560	20490	18130	15650	14580	12810	11040	11040	11040	11040
	W	8920	7100	6270	5440	4620	3790	2960	2960	2960	2960
35	Q	23500	21490	19480	17470	15470	13460	10510	7550	4600	4600
	W	7830	6970	6110	5250	4390	3520	2660	1800	940	940
30	Q	25340	23090	20840	18600	16350	14100	11070	8040	5010	5010
	W	6740	6010	5280	4550	3820	3090	2370	1640	910	910
25	Q	27170	24690	22200	19720	17230	14740	11630	8520	5410	5410
	W	5640	5040	4440	3840	3240	2640	2040	1440	840	840
20	Q	29010	26280	23560	20840	18110	15390	12200	9010	5820	5820
	W	4550	4070	3600	3130	2650	2180	1710	1230	760	760

Heating

Outdoor temperature(°C)		Load(%)									
		100	90	80	70	60	50	40	30	20	10
20	Q	38130	34620	31110	27600	24090	20590	17080	14330	11590	8840
	W	8620	7830	7050	6260	5470	4690	3900	3110	2330	1540
15	Q	33850	30640	27440	24240	21040	17830	14630	12160	9680	7210
	W	8130	7370	6610	5850	5090	4320	3560	2800	2040	1270
10	Q	29570	26670	23770	20880	17980	15080	12190	9980	7780	5580
	W	7650	6910	6170	5440	4700	3960	3220	2490	1750	1010
7	Q	27000	24570	21870	19180	16480	13790	11950	9500	7050	4600
	W	7360	6640	5910	5190	4470	3740	3020	2300	1570	850
5	Q	25290	22700	20110	17510	14920	12330	9740	7810	5880	3950
	W	7170	6450	5740	5030	4310	3600	2880	2170	1460	740
2	Q	22720	20210	17690	15180	12660	10140	7790	7790	7790	7790
	W	6880	6140	5400	4660	3930	3190	2450	2450	2450	2450
0	Q	21010	18770	16530	14280	12040	9800	7700	7700	7700	7700
	W	6680	5970	5260	4550	3830	3120	2410	2410	2410	2410
-5	Q	16730	15260	13780	12310	10840	9360	9360	9360	9360	9360
	W	6200	5550	4900	4240	3590	2940	2940	2940	2940	2940
-7	Q	15020	13870	12730	11580	10440	9290	9290	9290	9290	9290
	W	6000	5340	4680	4020	3360	2700	2700	2700	2700	2700
-10	Q	14920	13690	12450	11220	9980	8750	8750	8750	8750	8750
	W	5840	5200	4560	3920	3280	2640	2640	2640	2640	2640
-15	Q	14760	13480	12210	10930	9650	8040	8040	8040	8040	8040
	W	5620	5000	4390	3770	3160	2550	2550	2550	2550	2550
-20	Q	11230	10070	8910	7750	6590	5430	5430	5430	5430	5430
	W	4960	4460	3950	3450	2940	2440	2440	2440	2440	2440

Indoor unit: RAV-SM567MUT-E×4

Outdoor unit: RAV-SM2246AT8-E

	Cooling		Heating	
	Capacity Q(W)	Power consumption W(W)	Capacity Q(W)	Power consumption W(W)
MINIMUM	4600	1010	4600	930
RATING	20000	6350	22400	6310

Cooling

Outdoor temperature(°C)		Load(%)									
		100	90	80	70	60	50	40	30	20	10
46	Q	17040	15790	14550	13300	12060	10810	9570	9570	9570	9570
	W	8840	8070	7290	6520	5740	4960	4190	4190	4190	4190
43	Q	17780	16450	15120	13790	12450	11120	9790	9790	9790	9790
	W	7580	6990	6400	5810	5220	4630	4040	4040	4040	4040
40	Q	18130	16780	15430	14090	12740	11390	10040	10040	10040	10040
	W	7060	6530	6000	5470	4940	4410	3880	3880	3880	3880
35	Q	20000	18290	16580	14870	13160	11440	9730	8020	6310	4600
	W	6350	5760	5160	4570	3980	3380	2790	2200	1600	1010
30	Q	21040	19260	17480	15700	13910	12130	10350	8570	6790	5010
	W	6070	5500	4940	4370	3810	3240	2680	2110	1540	980
25	Q	22200	20330	18470	16600	14740	12870	11010	9140	7280	5410
	W	5230	4750	4270	3790	3310	2830	2350	1870	1390	910
20	Q	23560	21590	19620	17650	15670	13700	11730	9760	7790	5820
	W	4400	4000	3610	3210	2810	2420	2020	1620	1230	830

Heating

Outdoor temperature(°C)		Load(%)									
		100	90	80	70	60	50	40	30	20	10
20	Q	31110	28640	26160	23690	21210	18740	16260	13790	11320	8840
	W	7900	7200	6500	5810	5110	4410	3710	3020	2320	1620
15	Q	27440	25190	22940	20700	18450	16200	13950	11710	9460	7210
	W	7460	6780	6100	5420	4750	4070	3390	2710	2030	1350
10	Q	23770	21750	19730	17710	15690	13660	11640	9620	7600	5580
	W	7020	6360	5700	5040	4380	3730	3070	2410	1750	1090
7	Q	22400	20420	18440	16470	14490	12510	10530	8560	6580	4600
	W	6310	5710	5110	4520	3920	3320	2720	2130	1530	930
5	Q	20110	18310	16520	14720	12930	11130	9330	7540	5740	3950
	W	6190	5600	5000	4400	3810	3210	2610	2020	1420	820
2	Q	17690	15710	13730	11750	9770	7790	7790	7790	7790	7790
	W	6020	5330	4650	3960	3280	2590	2590	2590	2590	2590
0	Q	16530	14760	13000	11230	9470	7700	7700	7700	7700	7700
	W	5910	5230	4560	3890	3220	2550	2550	2550	2550	2550
-5	Q	13780	12680	11570	10470	9360	9360	9360	9360	9360	9360
	W	5620	4980	4350	3720	3090	3090	3090	3090	3090	3090
-7	Q	12730	11870	11010	10150	9290	9290	9290	9290	9290	9290
	W	5500	4840	4180	3510	2850	2850	2850	2850	2850	2850
-10	Q	12450	11520	10600	9670	8750	8750	8750	8750	8750	8750
	W	5330	4690	4060	3430	2790	2790	2790	2790	2790	2790
-15	Q	12210	11170	10120	9080	8040	8040	8040	8040	8040	8040
	W	5040	4450	3870	3280	2700	2700	2700	2700	2700	2700
-20	Q	8910	8040	7170	6300	5430	5430	5430	5430	5430	5430
	W	4750	4210	3670	3130	2590	2590	2590	2590	2590	2590

Indoor unit: RAV-SM1108CTP-E×2, RAV-SM808CTP-E×3, RAV-SM568CTP-E×4

Outdoor unit: RAV-SM2246AT8-E

	Cooling		Heating	
	Capacity Q(W)	Power consumption W(W)	Capacity Q(W)	Power consumption W(W)
MINIMUM	4600	1010	4600	930
RATING	20000	6170	22400	5890

Cooling

Outdoor temperature(°C)		Load(%)									
		100	90	80	70	60	50	40	30	20	10
46	Q	17040	15790	14550	13300	12060	10810	9570	9570	9570	9570
	W	8660	7920	7170	6430	5680	4930	4190	4190	4190	4190
43	Q	17780	16450	15120	13790	12450	11120	9790	9790	9790	9790
	W	7400	6840	6280	5720	5160	4600	4040	4040	4040	4040
40	Q	18130	16780	15430	14090	12740	11390	10040	10040	10040	10040
	W	6880	6380	5880	5380	4880	4380	3880	3880	3880	3880
35	Q	20000	18290	16580	14870	13160	11440	9730	8020	6310	4600
	W	6170	5600	5020	4450	3880	3300	2730	2160	1580	1010
30	Q	21040	19260	17480	15700	13910	12130	10350	8570	6790	5010
	W	5890	5340	4800	4250	3710	3160	2620	2070	1520	980
25	Q	22200	20330	18470	16600	14740	12870	11010	9140	7280	5410
	W	5050	4590	4130	3670	3210	2750	2290	1830	840	910
20	Q	23560	21590	19620	17650	15670	13700	11730	9760	7790	5820
	W	4210	3830	3460	3080	2710	2330	1960	1580	1210	830

Heating

Outdoor temperature(°C)		Load(%)									
		100	90	80	70	60	50	40	30	20	10
20	Q	31110	28640	26160	23690	21210	18740	16260	13790	11320	8840
	W	7480	6830	6180	5530	4880	4220	3570	2920	2270	1620
15	Q	27440	25190	22940	20700	18450	16200	13950	11710	9460	7210
	W	7040	6410	5780	5140	4510	3880	3250	2620	1990	1350
10	Q	23770	21750	19730	17710	15690	13660	11640	9620	7600	5580
	W	6600	5990	5380	4760	4150	3540	2930	2310	1700	1090
7	Q	22400	20420	18440	16470	14490	12510	10530	8560	6580	4600
	W	5890	5340	4790	4240	3690	3130	2580	2030	1480	930
5	Q	20110	18310	16520	14720	12930	11130	9330	7540	5740	3950
	W	5770	5220	4670	4120	3570	3020	2470	1920	1370	820
2	Q	17690	15710	13730	11750	9770	7790	7790	7790	7790	7790
	W	5600	5010	4410	3820	3220	2630	2630	2630	2630	2630
0	Q	16530	14760	13000	11230	9470	7700	7700	7700	7700	7700
	W	5490	4910	4330	3750	3170	2590	2590	2590	2590	2590
-5	Q	13780	12680	11570	10470	9360	9360	9360	9360	9360	9360
	W	5200	4680	4170	3650	3140	3140	3140	3140	3140	3140
-7	Q	12730	11870	11010	10150	9290	9290	9290	9290	9290	9290
	W	5080	4540	3990	3450	2900	2900	2900	2900	2900	2900
-10	Q	12450	11520	10600	9670	8750	8750	8750	8750	8750	8750
	W	4910	4390	3870	3360	2840	2840	2840	2840	2840	2840
-15	Q	12210	11170	10120	9080	8040	8040	8040	8040	8040	8040
	W	4620	4150	3680	3220	2750	2750	2750	2750	2750	2750
-20	Q	8910	8040	7170	6300	5430	5430	5430	5430	5430	5430
	W	4330	3910	3480	3060	2640	2640	2640	2640	2640	2640

Indoor unit: RAV-SM1408CTP-E×2, RAV-SM808CTP-E×3, RAV-SM808CTP-E×4

Outdoor unit: RAV-SM2806AT8-E

	Cooling		Heating	
	Capacity Q(W)	Power consumption W(W)	Capacity Q(W)	Power consumption W(W)
MINIMUM	4600	1010	4600	930
RATING	23500	8970	27000	7830

Cooling

Outdoor temperature(°C)		Load(%)									
		100	90	80	70	60	50	40	30	20	10
46	Q	17440	17440	17440	15010	13520	12050	10570	10570	10570	10570
	W	7450	7450	7450	6870	6280	4990	3690	3690	3690	3690
43	Q	21990	19890	17780	15680	14050	12420	10790	10790	10790	10790
	W	10720	9540	8350	6790	5980	4790	3600	3600	3600	3600
40	Q	22560	20490	18130	16350	14580	12810	11040	11040	11040	11040
	W	10060	8950	7830	6710	5600	4480	3360	3360	3360	3360
35	Q	23500	21490	19480	17470	15470	13460	10510	7550	4600	4600
	W	8970	7980	6990	6000	5010	4020	3030	2040	1010	1010
30	Q	25340	23090	20840	18600	16350	14100	11070	8040	5010	5010
	W	7880	7010	6150	5290	4430	3570	2700	1840	980	980
25	Q	27170	24690	22200	19720	17230	14740	11630	8520	5410	5410
	W	6780	6050	5310	4580	3840	3110	2370	1640	900	900
20	Q	29010	26280	23560	20840	18110	15390	12200	9010	5820	5820
	W	5690	5080	4470	3870	3260	2650	2040	1440	830	830

Heating

Outdoor temperature(°C)		Load(%)									
		100	90	80	70	60	50	40	30	20	10
20	Q	38130	34620	31110	27600	24090	20590	17080	14330	11590	8840
	W	9090	8210	7340	6460	5580	4710	3940	3160	2390	1620
15	Q	33850	30640	27440	24240	21040	17830	14630	12160	9680	7210
	W	8600	7760	6920	6090	5250	4410	3640	2880	2120	1360
10	Q	29570	26670	23770	20880	17980	15080	12190	9980	7780	5580
	W	8120	7320	6510	5710	4910	4100	3350	2600	1840	1090
7	Q	27000	24570	21870	19180	16480	13790	11950	9500	7050	4600
	W	7830	7050	6270	5490	4700	3920	3170	2430	1680	930
5	Q	25290	22700	20110	17510	14920	12330	9740	7810	5880	3950
	W	7640	6870	6100	5340	4570	3800	3060	2310	1570	820
2	Q	22720	20210	17690	15180	12660	10140	7790	7790	7790	7790
	W	7350	6550	5760	4960	4170	3380	2630	2630	2630	2630
0	Q	21010	18770	16530	14280	12040	9800	7700	7700	7700	7700
	W	7150	6380	5620	4850	4080	3310	2590	2590	2590	2590
-5	Q	16730	15260	13780	12310	10840	9360	9360	9360	9360	9360
	W	6670	5960	5260	4550	3850	3140	3140	3140	3140	3140
-7	Q	15020	13870	12730	11580	10440	9290	9290	9290	9290	9290
	W	6470	5760	5050	4330	3620	2900	2900	2900	2900	2900
-10	Q	14920	13690	12450	11220	9980	8750	8750	8750	8750	8750
	W	6310	5610	4920	4230	3540	2840	2840	2840	2840	2840
-15	Q	14760	13480	12210	10930	9650	8040	8040	8040	8040	8040
	W	6090	5400	4700	4010	3320	2750	2750	2750	2750	2750
-20	Q	11230	10070	8910	7750	6590	5430	5430	5430	5430	5430
	W	5430	4870	4310	3750	3200	2640	2640	2640	2640	2640

Indoor unit: RAV-SM1106BTP-E1×2, RAV-SM806BTP-E1×3, RAV-SM566BTP-E1×4

Outdoor unit: RAV-SM2246AT8-E

	Cooling		Heating	
	Capacity Q(W)	Power consumption W(W)	Capacity Q(W)	Power consumption W(W)
MINIMUM	4600	1010	4600	930
RATING	20000	6170	22400	5740

Cooling

Outdoor temperature(°C)		Load(%)									
		100	90	80	70	60	50	40	30	20	10
46	Q	17040	15790	14550	13300	12060	10810	9570	9570	9570	9570
	W	8660	7920	7170	6430	5680	4930	4190	4190	4190	4190
43	Q	17780	16450	15120	13790	12450	11120	9790	9790	9790	9790
	W	7400	6840	6280	5720	5160	4600	4040	4040	4040	4040
40	Q	18130	16780	15430	14090	12740	11390	10040	10040	10040	10040
	W	6880	6380	5880	5380	4880	4380	3880	3880	3880	3880
35	Q	20000	18290	16580	14870	13160	11440	9730	8020	6310	4600
	W	6170	5600	5020	4450	3880	3300	2730	2160	1580	1010
30	Q	21040	19260	17480	15700	13910	12130	10350	8570	6790	5010
	W	5890	5340	4800	4250	3710	3160	2620	2070	1520	980
25	Q	22200	20330	18470	16600	14740	12870	11010	9140	7280	5410
	W	5050	4590	4130	3670	3210	2750	2290	1830	1370	910
20	Q	23560	21590	19620	17650	15670	13700	11730	9760	7790	5820
	W	4210	3830	3460	3080	2710	2330	1960	1580	1210	830

Heating

Outdoor temperature(°C)		Load(%)									
		100	90	80	70	60	50	40	30	20	10
20	Q	31110	28640	26160	23690	21210	18740	16260	13790	11320	8840
	W	7330	6700	6060	5430	4790	4160	3520	2890	2250	1620
15	Q	27440	25190	22940	20700	18450	16200	13950	11710	9460	7210
	W	6890	6270	5660	5040	4430	3810	3200	2580	1970	1350
10	Q	23770	21750	19730	17710	15690	13660	11640	9620	7600	5580
	W	6450	5850	5260	4660	4070	3470	2880	2280	1680	1090
7	Q	22400	20420	18440	16470	14490	12510	10530	8560	6580	4600
	W	5740	5210	4670	4140	3600	3070	2530	2000	1460	930
5	Q	20110	18310	16520	14720	12930	11130	9330	7540	5740	3950
	W	5620	5090	4560	4020	3490	2960	2420	1890	1360	820
2	Q	17690	15710	13730	11750	9770	7790	7790	7790	7790	7790
	W	5450	4880	4310	3740	3170	2590	2590	2590	2590	2590
0	Q	16530	14760	13000	11230	9470	7700	7700	7700	7700	7700
	W	5340	4780	4220	3660	3110	2550	2550	2550	2550	2550
-5	Q	13780	12680	11570	10470	9360	9360	9360	9360	9360	9360
	W	5050	4560	4070	3580	3090	3090	3090	3090	3090	3090
-7	Q	12730	11870	11010	10150	9290	9290	9290	9290	9290	9290
	W	4930	4410	3890	3370	2850	2850	2850	2850	2850	2850
-10	Q	12450	11520	10600	9670	8750	8750	8750	8750	8750	8750
	W	4760	4270	3780	3280	2790	2790	2790	2790	2790	2790
-15	Q	12210	11170	10120	9080	8040	8040	8040	8040	8040	8040
	W	4470	4020	3580	3140	2700	2700	2700	2700	2700	2700
-20	Q	8910	8040	7170	6300	5430	5430	5430	5430	5430	5430
	W	4180	3780	3380	2980	2590	2590	2590	2590	2590	2590

Indoor unit: RAV-SM1406BTP-E×2, RAV-SM806BTP-E1×3, RAV-SM806BTP-E1×4

Outdoor unit: RAV-SM2806AT8-E

	Cooling		Heating	
	Capacity Q(W)	Power consumption W(W)	Capacity Q(W)	Power consumption W(W)
MINIMUM	4600	1010	4600	930
RATING	23500	8870	27000	7710

Cooling

Outdoor temperature(°C)		Load(%)									
		100	90	80	70	60	50	40	30	20	10
46	Q	17440	17440	17440	15010	13520	12050	10570	10570	10570	10570
	W	7370	7370	7370	6870	6220	4940	3640	3640	3640	3640
43	Q	21990	19890	17780	15680	14050	12420	10790	10790	10790	10790
	W	10520	9370	8210	6750	5900	4740	3550	3550	3550	3550
40	Q	22560	20490	18130	16350	14580	12810	11040	11050	11050	11050
	W	9870	8780	7690	6600	5520	4430	3310	3310	3310	3310
35	Q	23500	21490	19480	17470	15470	13460	10510	7550	4600	4600
	W	8870	7890	6910	5920	4940	3960	2980	1990	1010	1010
30	Q	25340	23090	20840	18600	16350	14100	11070	8040	5010	5010
	W	7780	6930	6080	5230	4380	3530	2680	1830	980	980
25	Q	27170	24690	22200	19720	17230	14740	11630	8520	5410	5410
	W	6680	5960	5240	4510	3790	3070	2350	1630	900	900
20	Q	29010	26280	23560	20840	18110	15390	12200	9010	5820	5820
	W	5590	4990	4400	3800	3210	2610	2020	1420	830	830

Heating

Outdoor temperature(°C)		Load(%)									
		100	90	80	70	60	50	40	30	20	10
20	Q	38130	34620	31110	27600	24090	20590	17080	14330	11590	8840
	W	8970	8150	7320	6500	5680	4860	4040	3210	2390	1620
15	Q	33850	30640	27440	24240	21040	17830	14630	12160	9680	7210
	W	8480	7690	6890	6100	5300	4510	3710	2910	2120	1350
10	Q	29570	26670	23770	20880	17980	15080	12190	9980	7780	5580
	W	8000	7230	6460	5690	4920	4150	3380	2610	1840	1090
7	Q	27000	24570	21870	19180	16480	13790	11950	9500	7050	4600
	W	7710	6960	6200	5450	4690	3940	3190	2430	1680	930
5	Q	25290	22700	20110	17510	14920	12330	9740	7810	5880	3950
	W	7520	6770	6030	5290	4540	3800	3060	2310	1570	820
2	Q	22720	20210	17690	15180	12660	10140	7790	7790	7790	7790
	W	7230	6450	5670	4890	4110	3330	2590	2590	2590	2590
0	Q	21010	18770	16530	14280	12040	9800	7700	7700	7700	7700
	W	7030	6280	5520	4770	4010	3260	2550	2550	2550	2550
-5	Q	16730	15260	13780	12310	10840	9360	9360	9360	9360	9370
	W	6550	5860	5170	4480	3790	3090	3090	3090	3090	3090
-7	Q	15020	13870	12730	11580	10440	9290	9290	9290	9290	9290
	W	6350	5660	4960	4260	3560	2850	2850	2850	2850	2850
-10	Q	14920	13690	12450	11220	9980	8750	8750	8750	8750	8750
	W	6190	5510	4830	4150	3480	2790	2790	2790	2790	2790
-15	Q	14760	13480	12210	10930	9650	8040	8040	8040	8040	8040
	W	5970	5290	4610	3940	3260	2700	2700	2700	2700	2700
-20	Q	11230	10070	8910	7750	6590	5430	5430	5430	5430	5440
	W	5310	4770	4220	3680	3140	2590	2590	2590	2590	2590

Indoor unit: RAV-SM564SDT-E×4

Outdoor unit: RAV-SM2246AT8-E

	Cooling		Heating	
	Capacity Q(W)	Power consumption W(W)	Capacity Q(W)	Power consumption W(W)
MINIMUM	4600	1010	4600	930
RATING	20000	6670	22400	6310

Cooling

Outdoor temperature(°C)		Load(%)									
		100	90	80	70	60	50	40	30	20	10
46	Q	17040	15790	14550	13300	12060	10810	9570	9570	9570	9570
	W	9160	8330	7510	6680	5850	5020	4190	4190	4190	4190
43	Q	17780	16450	15120	13790	12450	11120	9790	9790	9790	9790
	W	7900	7260	6610	5970	5330	4680	4040	4040	4040	4040
40	Q	18130	16780	15430	14090	12740	11390	10040	10040	10040	10040
	W	7380	6800	6210	5630	5050	4460	3880	3880	3880	3880
35	Q	20000	18290	16580	14870	13160	11440	9730	8020	6310	4600
	W	6670	6040	5410	4780	4150	3530	2900	2270	1640	1010
30	Q	21040	19260	17480	15700	13910	12130	10350	8570	6790	5010
	W	6390	5790	5190	4590	3990	3380	2780	2180	1580	980
25	Q	22200	20330	18470	16600	14740	12870	11010	9140	7280	5410
	W	5550	5030	4520	4000	3490	2970	2450	1940	1420	910
20	Q	23560	21590	19620	17650	15670	13700	11730	9760	7790	5820
	W	4720	4290	3860	3420	2990	2560	2130	1700	1260	830

Heating

Outdoor temperature(°C)		Load(%)									
		100	90	80	70	60	50	40	30	20	10
20	Q	31110	28640	26160	23690	21210	18740	16260	13790	11320	8840
	W	7900	7200	6500	5810	5110	4410	3710	3020	2320	1620
15	Q	27440	25190	22940	20700	18450	16200	13950	11710	9460	7210
	W	7460	6780	6100	5420	4750	4070	3390	2710	2030	1350
10	Q	23770	21750	19730	17710	15690	13660	11640	9620	7600	5580
	W	7020	6360	5700	5040	4380	3730	3070	2410	1750	1090
7	Q	22400	20420	18440	16470	14490	12510	10530	8560	6580	4600
	W	6310	5710	5110	4520	3920	3320	2720	2130	1530	930
5	Q	20110	18310	16520	14720	12930	11130	9330	7540	5740	3950
	W	6190	5600	5000	4400	3810	3210	2610	2020	1420	820
2	Q	17690	15710	13730	11750	9770	7790	7790	7790	7790	7790
	W	6020	5330	4650	3960	3280	2590	2590	2590	2590	2590
0	Q	16530	14760	13000	11230	9470	7700	7700	7700	7700	7700
	W	5910	5230	4560	3890	3220	2550	2550	2550	2550	2550
-5	Q	13780	12680	11570	10470	9360	9360	9360	9360	9360	9360
	W	5620	4980	4350	3720	3090	3090	3090	3090	3090	3090
-7	Q	12730	11870	11010	10150	9290	9290	9290	9290	9290	9290
	W	5500	4840	4180	3510	2850	2850	2850	2850	2850	2850
-10	Q	12450	11520	10600	9670	8750	8750	8750	8750	8750	8750
	W	5330	4690	4060	3430	2790	2790	2790	2790	2790	2790
-15	Q	12210	11170	10120	9080	8040	8040	8040	8040	8040	8040
	W	5040	4450	3870	3280	2700	2700	2700	2700	2700	2700
-20	Q	8910	8040	7170	6300	5430	5430	5430	5430	5430	5430
	W	4750	4210	3670	3130	2590	2590	2590	2590	2590	2590

Indoor unit: RAV-SM2244DTP-E

Outdoor unit: RAV-SM2246AT8-E

	Cooling		Heating	
	Capacity Q(W)	Power consumption W(W)	Capacity Q(W)	Power consumption W(W)
MINIMUM	4600	1270	4600	1270
RATING	19000	5860	22400	5890

Cooling

Outdoor temperature(°C)		Load(%)									
		100	90	80	70	60	50	40	30	20	10
46	Q	14510	13600	12690	11790	10880	9970	9070	9070	9070	9070
	W	8650	7790	6920	6060	5190	4320	3460	3460	3460	3460
43	Q	16780	15530	14280	13040	11790	10540	9290	9290	9290	9290
	W	7610	6890	6170	5440	4720	4000	3280	3280	3280	3280
40	Q	17130	15870	14600	13340	12070	10810	9540	9540	9540	9540
	W	6950	6310	5670	5030	4390	3750	3110	3110	3110	3110
35	Q	19000	17400	15800	14200	12600	11000	9400	7800	6200	4600
	W	5860	5350	4840	4330	3820	3310	2800	2290	1780	1270
30	Q	20040	18370	16700	15030	13360	11690	10020	8350	6680	5010
	W	4770	4380	3990	3590	3200	2810	2420	2020	1630	1240
25	Q	21200	19450	17690	15940	14180	12430	10670	8920	7160	5410
	W	3670	3390	3110	2840	2560	2280	2000	1720	1440	1170
20	Q	22560	20700	18840	16980	15120	13260	11400	9540	7680	5820
	W	2580	2410	2250	2080	1920	1750	1590	1420	1260	1090

Heating

Outdoor temperature(°C)		Load(%)									
		100	90	80	70	60	50	40	30	20	10
20	Q	26640	24660	22690	20710	18730	16750	14780	12800	10820	8840
	W	7150	6570	6000	5420	4840	4270	3690	3110	2540	1960
15	Q	25010	23030	21060	19080	17100	15120	13140	11170	9190	7210
	W	6660	6110	5560	5000	4450	3900	3350	2800	2250	1690
10	Q	23380	21400	19420	17450	15470	13490	11510	9530	7560	5580
	W	6180	5650	5120	4600	4070	3540	3010	2490	1960	1430
7	Q	22400	20420	18440	16470	14490	12510	10530	8560	6580	4600
	W	5890	5380	4860	4350	3840	3320	2810	2300	1780	1270
5	Q	21750	19770	17790	15810	13840	11860	9880	7900	5930	3950
	W	5850	5330	4810	4290	3770	3250	2730	2210	1680	1160
2	Q	17690	16040	14390	12740	11090	9440	7790	7790	7790	7790
	W	5810	5310	4820	4320	3830	3330	2830	2830	2830	2830
0	Q	16530	15060	13590	12110	10640	9170	7700	7700	7700	7700
	W	5670	5190	4710	4230	3750	3270	2790	2790	2790	2790
-5	Q	13780	14650	13330	12010	10680	9360	9360	9360	9360	9370
	W	5310	4920	4520	4130	3740	3340	3340	3340	3340	3340
-7	Q	12730	13220	12240	11250	10270	9290	9290	9290	9290	9290
	W	5100	4700	4300	3900	3500	3100	3100	3100	3100	3100
-10	Q	12450	12890	11860	10820	9780	8750	8750	8750	8750	8750
	W	4970	4580	4200	3810	3430	3040	3040	3040	3040	3040
-15	Q	12210	12570	11430	10300	9170	8040	8040	8040	8040	8040
	W	4800	4430	4060	3690	3320	2950	2950	2950	2950	2950
-20	Q	8910	9250	8290	7340	6390	5430	5430	5430	5430	5440
	W	4360	4060	3750	3450	3140	2840	2840	2840	2840	2840

Indoor unit: RAV-SM2804DTP-E

Outdoor unit: RAV-SM2806AT8-E

	Cooling		Heating	
	Capacity Q(W)	Power consumption W(W)	Capacity Q(W)	Power consumption W(W)
MINIMUM	4600	1270	4600	1270
RATING	22500	7980	27000	7780

Cooling

Outdoor temperature(°C)		Load(%)									
		100	90	80	70	60	50	40	30	20	10
46	Q	16640	16640	16640	14310	12920	11550	10170	10170	10170	10170
	W	6650	6650	6650	6220	5580	4290	2990	2990	2990	2990
43	Q	20990	19180	17360	15550	13730	11920	10390	10390	10390	10390
	W	9730	8490	7240	6010	5220	4090	2900	2900	2900	2900
40	Q	21560	19710	17860	16010	14160	12310	10640	10640	10640	10640
	W	9070	8020	6960	5900	4840	3780	2660	2660	2660	2660
35	Q	22500	20430	18370	16300	14240	12170	10110	7350	4600	4600
	W	7980	7040	6100	5160	4220	3270	2330	1800	1270	1270
30	Q	24340	22060	19780	17500	15230	12950	10670	7840	5010	5010
	W	6890	6070	5260	4440	3630	2820	2000	1620	1240	1240
25	Q	26170	23680	21190	18700	16210	13720	11230	8320	5410	5410
	W	5790	5100	4420	3730	3050	2360	1670	1420	1160	1160
20	Q	28010	25310	22600	19900	17200	14500	11800	8810	5820	5820
	W	4700	4140	3580	3020	2460	1900	1340	1220	1090	1090

Heating

Outdoor temperature(°C)		Load(%)									
		100	90	80	70	60	50	40	30	20	10
20	Q	38130	34620	31110	27600	24090	20590	17080	14330	11590	8840
	W	9040	8250	7470	6680	5890	5110	4320	3530	2750	1960
15	Q	33850	30640	27440	24240	21040	17830	14630	12160	9680	7210
	W	8550	7790	7030	6270	5510	4740	3980	3220	2460	1690
10	Q	29570	26670	23770	20880	17980	15080	12190	9980	7780	5580
	W	8070	7330	6590	5860	5120	4380	3640	2910	2170	1430
7	Q	27000	24570	21870	19180	16480	13790	11950	9500	7050	4600
	W	7780	7060	6330	5610	4890	4160	3440	2720	1990	1270
5	Q	25290	22700	20110	17510	14920	12330	9740	7810	5880	3950
	W	7590	6870	6160	5450	4730	4020	3300	2590	1880	1160
2	Q	22720	20210	17690	15180	12660	10140	7790	7790	7790	7790
	W	7300	6550	5810	5060	4320	3580	2830	2830	2830	2830
0	Q	21010	18770	16530	14280	12040	9800	7700	7700	7700	7700
	W	7100	6380	5670	4950	4230	3510	2790	2790	2790	2790
-5	Q	16730	15260	13780	12310	10840	9360	9360	9360	9360	9370
	W	6620	5960	5310	4650	4000	3340	3340	3340	3340	3340
-7	Q	15020	13870	12730	11580	10440	9290	9290	9290	9290	9290
	W	6420	5760	5100	4430	3770	3100	3100	3100	3100	3100
-10	Q	14920	13690	12450	11220	9980	8750	8750	8750	8750	8750
	W	6260	5610	4970	4330	3690	3040	3040	3040	3040	3040
-15	Q	14760	13480	12210	10930	9650	8040	8040	8040	8040	8040
	W	6040	5420	4800	4180	3560	2950	2950	2950	2950	2950
-20	Q	11230	10070	8910	7750	6590	5430	5430	5430	5430	5440
	W	5380	4870	4360	3850	3350	2840	2840	2840	2840	2840

Indoor unit: RAV-SM806KRT-E×3, RAV-SM566KRT-E×4

Outdoor unit: RAV-SM2246AT8-E

	Cooling		Heating	
	Capacity Q(W)	Power consumption W(W)	Capacity Q(W)	Power consumption W(W)
MINIMUM	4600	1010	4600	930
RATING	20000	6670	22400	6310

Cooling

Outdoor temperature(°C)		Load(%)									
		100	90	80	70	60	50	40	30	20	10
46	Q	17040	15790	14550	13300	12060	10810	9570	9570	9570	9570
	W	9160	8330	7510	6680	5850	5020	4190	4190	4190	4190
43	Q	17780	16450	15120	13790	12450	11120	9790	9790	9790	9790
	W	7900	7260	6610	5970	5330	4680	4040	4040	4040	4040
40	Q	18130	16780	15430	14090	12740	11390	10040	10040	10040	10040
	W	7380	6800	6210	5630	5050	4460	3880	3880	3880	3880
35	Q	20000	18290	16580	14870	13160	11440	9730	8020	6310	4600
	W	6670	6040	5410	4780	4150	3530	2900	2270	1640	1010
30	Q	21040	19260	17480	15700	13910	12130	10350	8570	6790	5010
	W	6390	5790	5190	4590	3990	3380	2780	2180	1580	980
25	Q	22200	20330	18470	16600	14740	12870	11010	9140	7280	5410
	W	5550	5030	4520	4000	3490	2970	2450	1940	1420	910
20	Q	23560	21590	19620	17650	15670	13700	11730	9760	7790	5820
	W	4720	4290	3860	3420	2990	2560	2130	1700	1260	830

Heating

Outdoor temperature(°C)		Load(%)									
		100	90	80	70	60	50	40	30	20	10
20	Q	31110	28640	26160	23690	21210	18740	16260	13790	11320	8840
	W	7900	7200	6500	5810	5110	4410	3710	3020	2320	1620
15	Q	27440	25190	22940	20700	18450	16200	13950	11710	9460	7210
	W	7460	6780	6100	5420	4750	4070	3390	2710	2030	1350
10	Q	23770	21750	19730	17710	15690	13660	11640	9620	7600	5580
	W	7020	6360	5700	5040	4380	3730	3070	2410	1750	1090
7	Q	22400	20420	18440	16470	14490	12510	10530	8560	6580	4600
	W	6310	5710	5110	4520	3920	3320	2720	2130	1530	930
5	Q	20110	18310	16520	14720	12930	11130	9330	7540	5740	3950
	W	6190	5600	5000	4400	3810	3210	2610	2020	1420	820
2	Q	17690	15710	13730	11750	9770	7790	7790	7790	7790	7790
	W	6020	5330	4650	3960	3280	2590	2590	2590	2590	2590
0	Q	16530	14760	13000	11230	9470	7700	7700	7700	7700	7700
	W	5910	5230	4560	3890	3220	2550	2550	2550	2550	2550
-5	Q	13780	12680	11570	10470	9360	9360	9360	9360	9360	9360
	W	5620	4980	4350	3720	3090	3090	3090	3090	3090	3090
-7	Q	12730	11870	11010	10150	9290	9290	9290	9290	9290	9290
	W	5500	4840	4180	3510	2850	2850	2850	2850	2850	2850
-10	Q	12450	11520	10600	9670	8750	8750	8750	8750	8750	8750
	W	5330	4690	4060	3430	2790	2790	2790	2790	2790	2790
-15	Q	12210	11170	10120	9080	8040	8040	8040	8040	8040	8040
	W	5040	4450	3870	3280	2700	2700	2700	2700	2700	2700
-20	Q	8910	8040	7170	6300	5430	5430	5430	5430	5430	5430
	W	4750	4210	3670	3130	2590	2590	2590	2590	2590	2590

Indoor unit: RAV-SM806KRT-E×3, RAV-SM806KRT-E×4

Outdoor unit: RAV-SM2806AT8-E

	Cooling		Heating	
	Capacity Q(W)	Power consumption W(W)	Capacity Q(W)	Power consumption W(W)
MINIMUM	4600	1010	4600	930
RATING	23500	9220	27000	7920

Cooling

Outdoor temperature(°C)		Load(%)									
		100	90	80	70	60	50	40	30	20	10
46	Q	17440	17440	17440	15010	13520	12050	10570	10570	10570	10570
	W	7450	7450	7450	7120	6460	5160	3840	3840	3840	3840
43	Q	21990	19890	17780	15680	14050	12420	10790	10790	10790	10790
	W	10970	9770	8560	7040	6150	4940	3750	3750	3750	3750
40	Q	22560	20490	18130	16350	14580	12810	11040	11050	11050	11050
	W	10310	9150	7980	6810	5650	4480	3510	3510	3510	3510
35	Q	23500	21490	19480	17470	15470	13460	10510	7550	4600	4600
	W	9220	8210	7210	6200	5190	4190	3180	2100	1010	1010
30	Q	25340	23090	20840	18600	16350	14100	11070	8040	5010	5010
	W	8130	7250	6370	5490	4610	3730	2850	1920	980	980
25	Q	27170	24690	22200	19720	17230	14740	11630	8520	5410	5410
	W	7030	6280	5530	4780	4030	3270	2520	1710	900	900
20	Q	29010	26280	23560	20840	18110	15390	12200	9010	5820	5820
	W	5940	5310	4690	4070	3440	2820	2190	1510	830	830

Heating

Outdoor temperature(°C)		Load(%)									
		100	90	80	70	60	50	40	30	20	10
20	Q	38130	34620	31110	27600	24090	20590	17080	14330	11590	8840
	W	9180	8340	7500	6660	5820	4980	4140	3300	2460	1620
15	Q	33850	30640	27440	24240	21040	17830	14630	12160	9680	7210
	W	8690	7880	7060	6250	5430	4620	3800	2990	2170	1350
10	Q	29570	26670	23770	20880	17980	15080	12190	9980	7780	5580
	W	8210	7420	6630	5840	5050	4250	3460	2670	1880	1090
7	Q	27000	24570	21870	19180	16480	13790	11950	9500	7050	4600
	W	7920	7140	6370	5590	4810	4040	3260	2480	1710	930
5	Q	25290	22700	20110	17510	14920	12330	9740	7810	5880	3950
	W	7730	6960	6190	5430	4660	3890	3120	2360	1590	820
2	Q	22720	20210	17690	15180	12660	10140	7790	7790	7790	7790
	W	7440	6630	5830	5020	4220	3420	2660	2660	2660	2660
0	Q	21010	18770	16530	14280	12040	9800	7700	7700	7700	7700
	W	7240	6460	5690	4910	4130	3350	2620	2620	2620	2620
-5	Q	16730	15260	13780	12310	10840	9360	9360	9360	9360	9360
	W	6760	6040	5330	4610	3900	3180	3180	3180	3180	3180
-7	Q	15020	13870	12730	11580	10440	9290	9290	9290	9290	9290
	W	6560	5840	5120	4390	3670	2940	2940	2940	2940	2940
-10	Q	14920	13690	12450	11220	9980	8750	8750	8750	8750	8750
	W	6400	5690	4990	4290	3590	2880	2880	2880	2880	2880
-15	Q	14760	13480	12210	10930	9650	8040	8040	8040	8040	8040
	W	6180	5480	4770	4070	3370	2790	2790	2790	2790	2790
-20	Q	11230	10070	8910	7750	6590	5430	5430	5430	5430	5440
	W	5520	4950	4380	3810	3250	2680	2680	2680	2680	2680

1-7. Sound Data

RAV-SM2246AT8-E

Sound pressure level (dB(A))	Cooling	Heating
	58	60

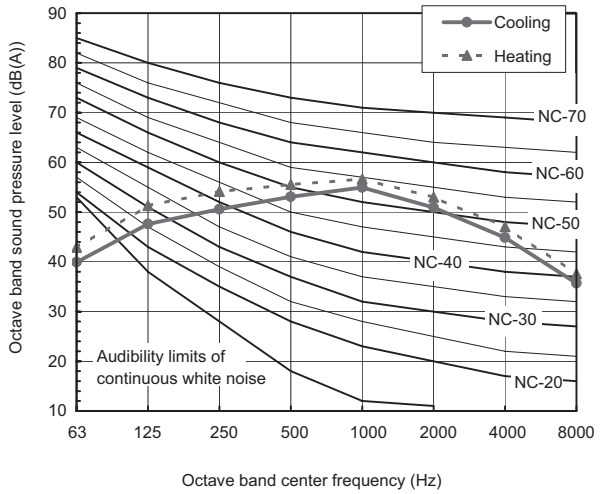

RAV-SM2806AT8-E

Sound pressure level (dB(A))	Cooling	Heating
	61	63

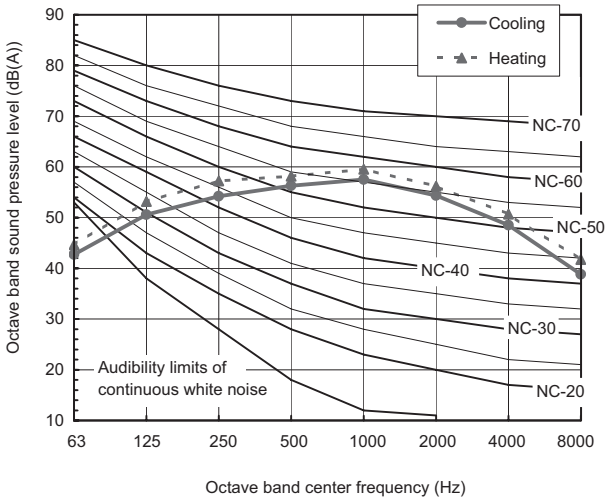

[Measuring location]

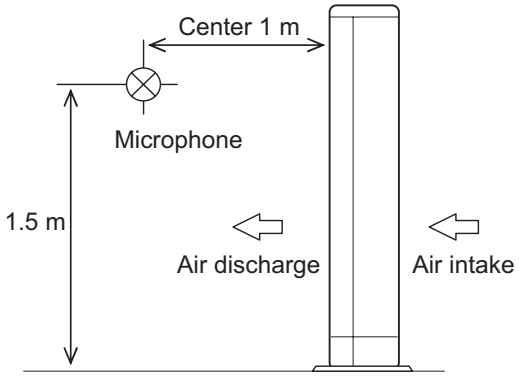

1-8. Pipe Capacity Correction

Connecting pipe length and lift difference between indoor units vs. capacity correction value

[Cooling]

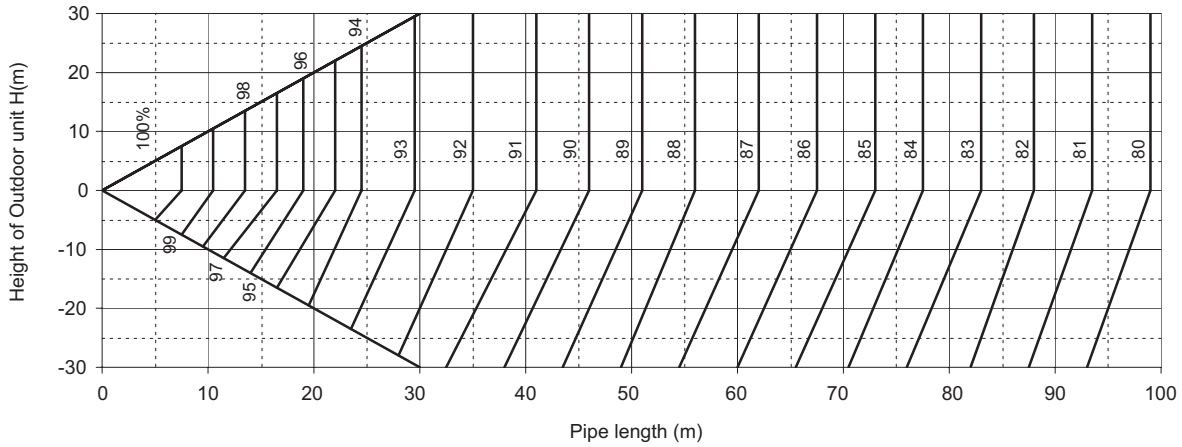

[Heating]

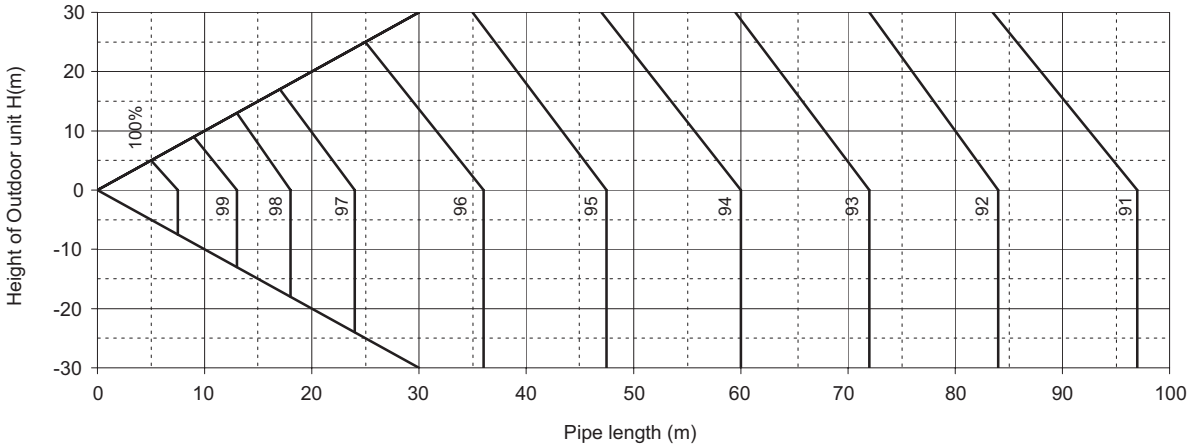

2. Indoor unit

2-1. 4-way Cassette Type

2-1-1. Dimension

2-1-2. Wiring diagrams

2-1-3. Air throw distance chart

2-1-4. Sound characteristics (NC curve)

2-1-1. Dimension

RAV-SM564UTP-E

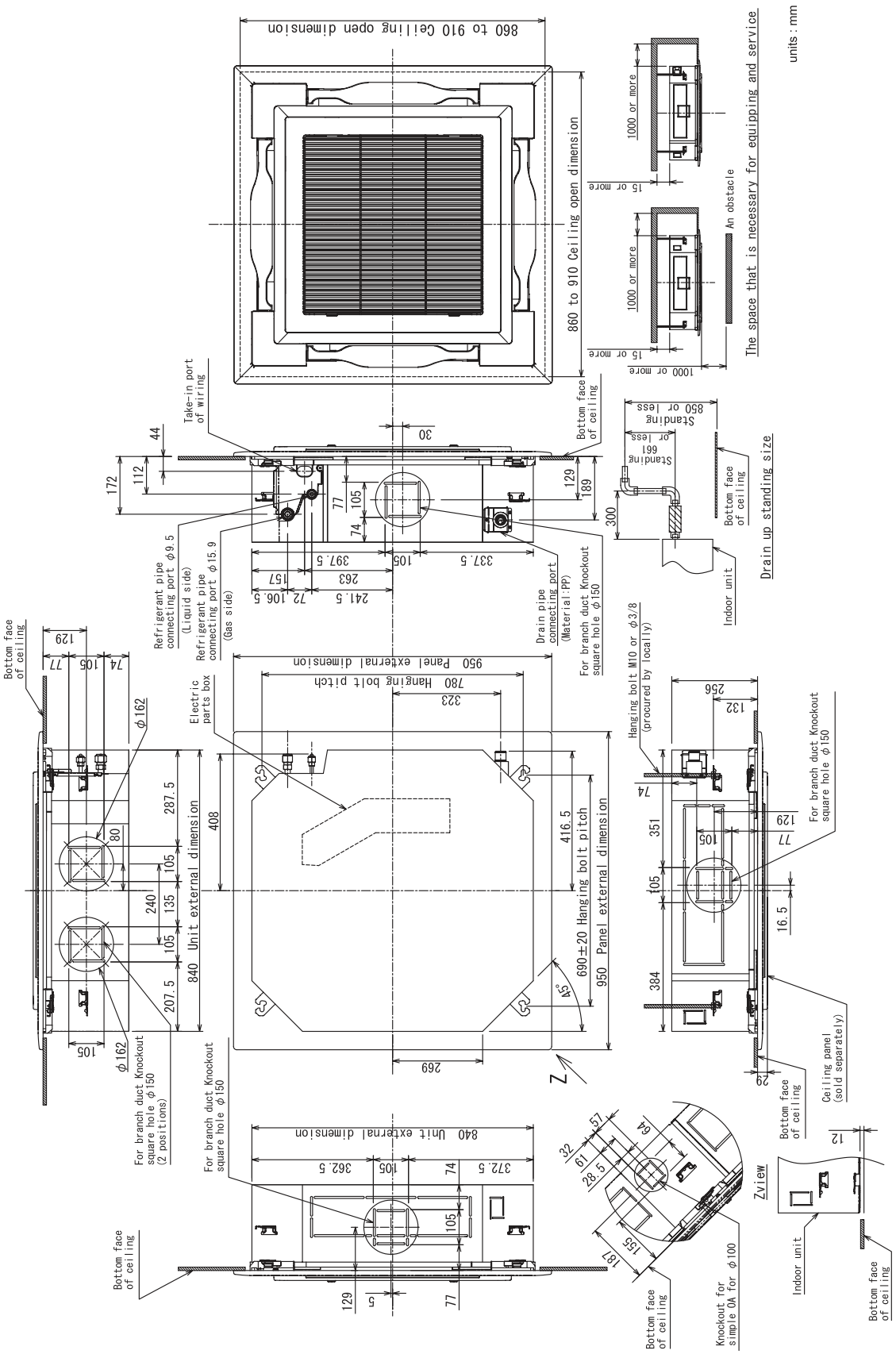

RAV-SM804UTP-E

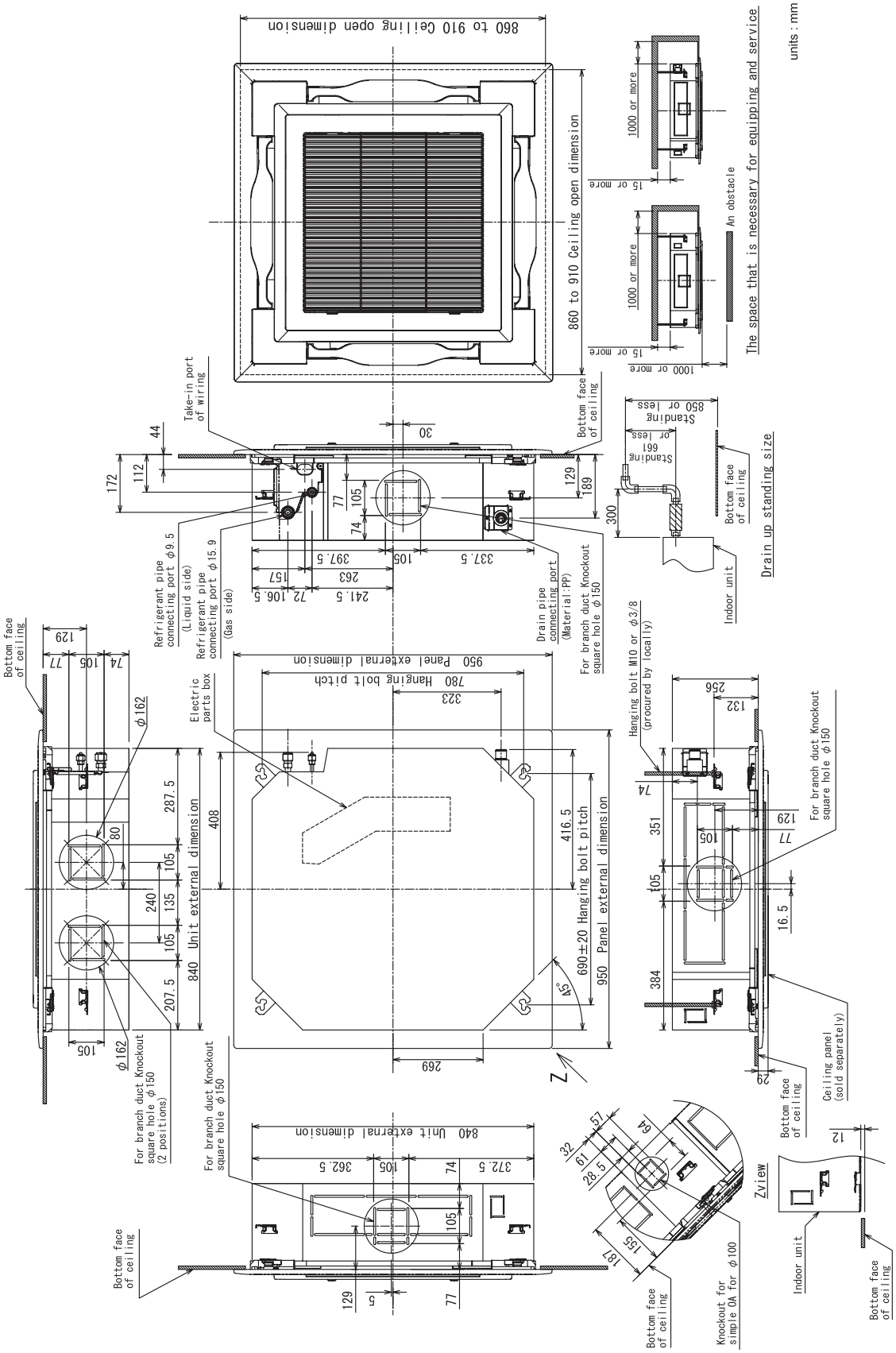

RAV-SM1104UTP-E, RAV-SM1404UTP-E

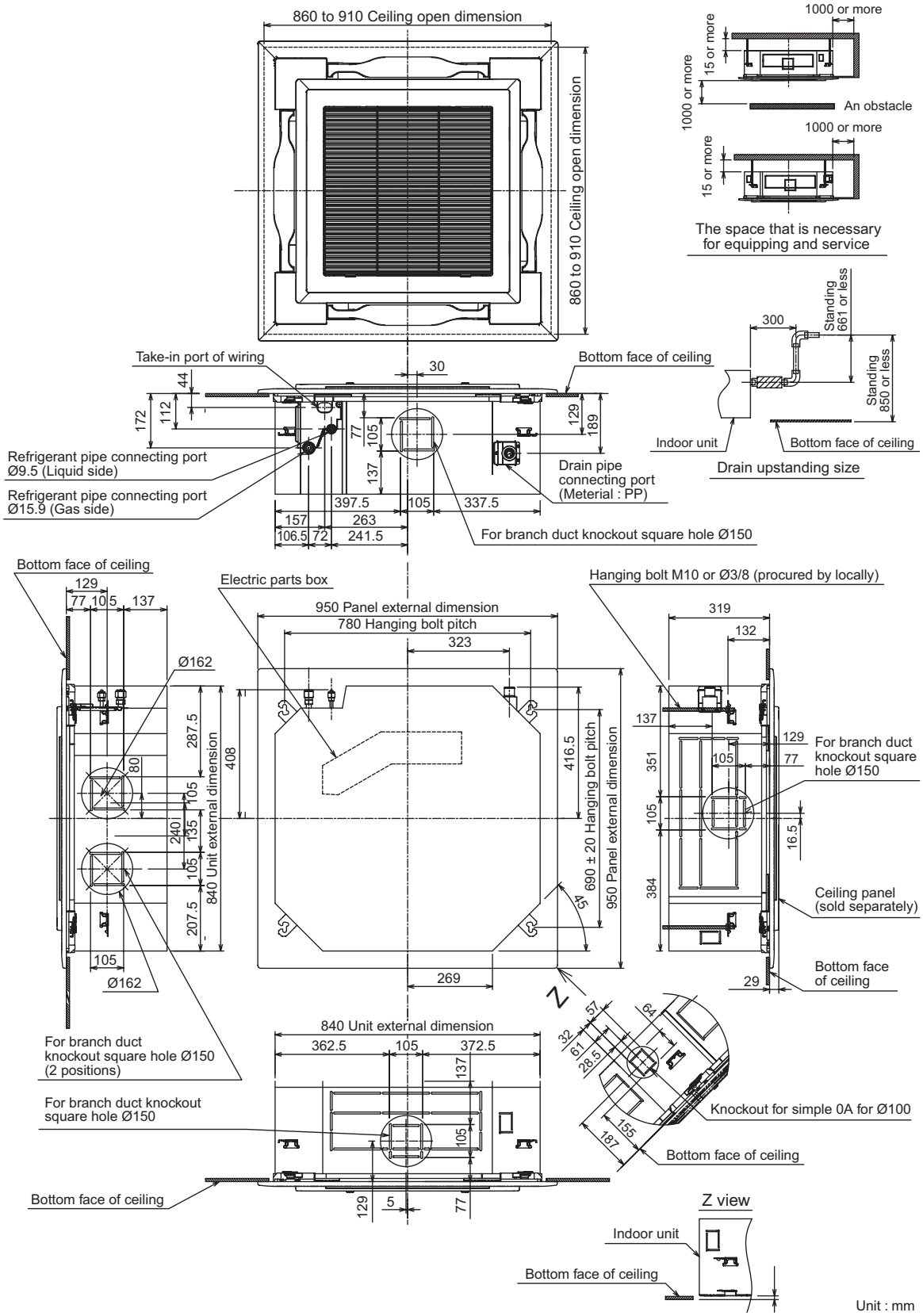

2-1-2. Wiring diagrams

RAV-SM564UTP-E, RAV-SM804UTP-E, RAV-SM1104UTP-E, RAV-SM1404UTP-E

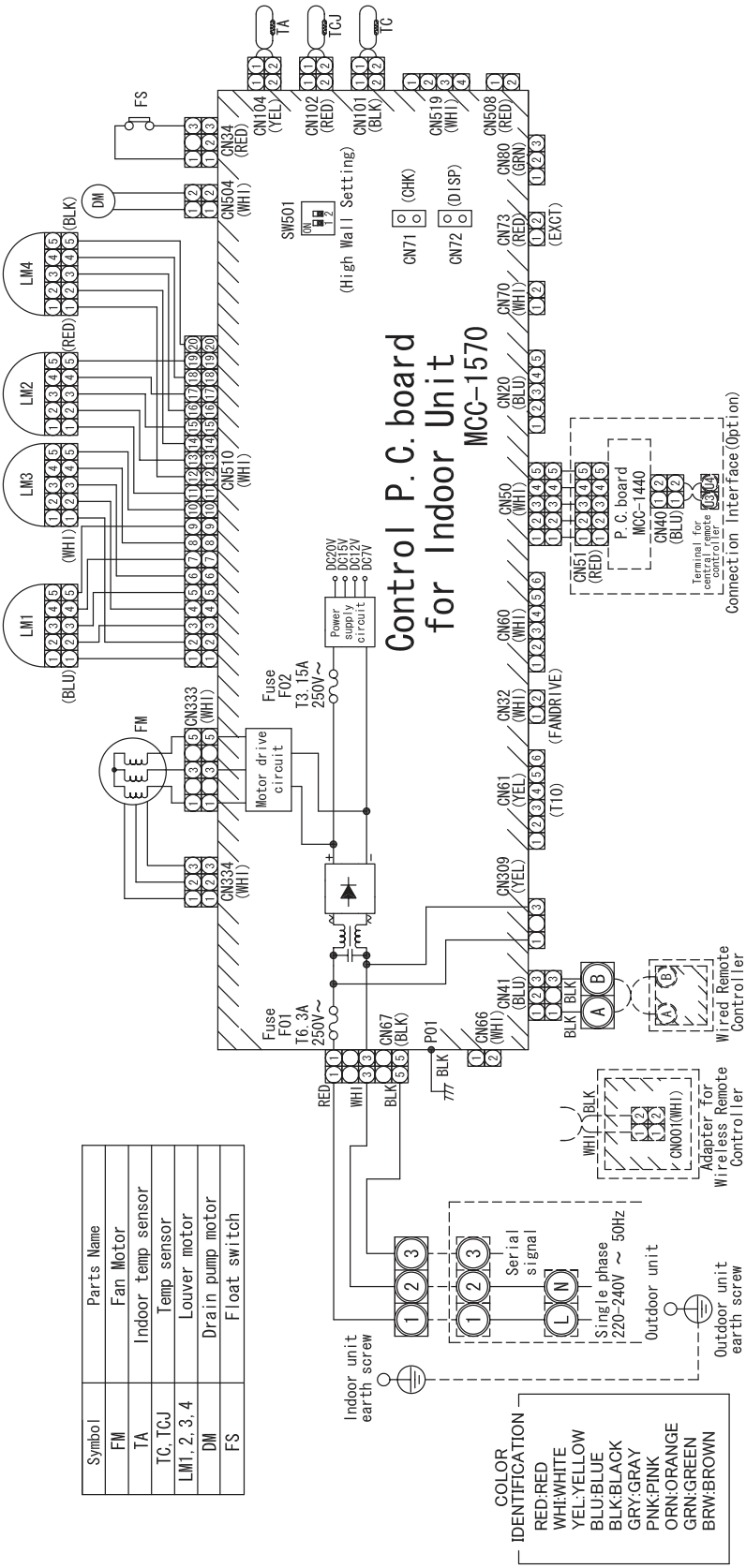

2-1-3. Air throw distance chart

RAV-SM564UTP-E

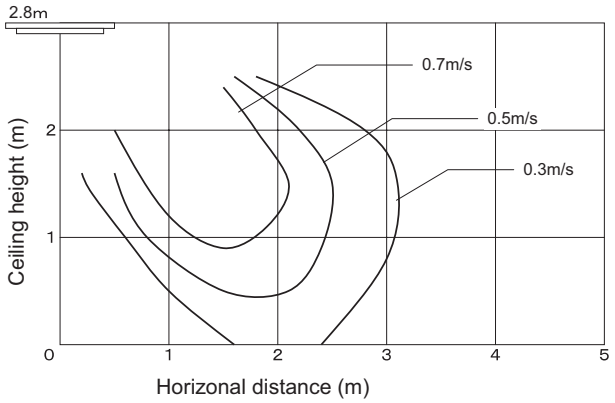

RAV-SM804UTP-E

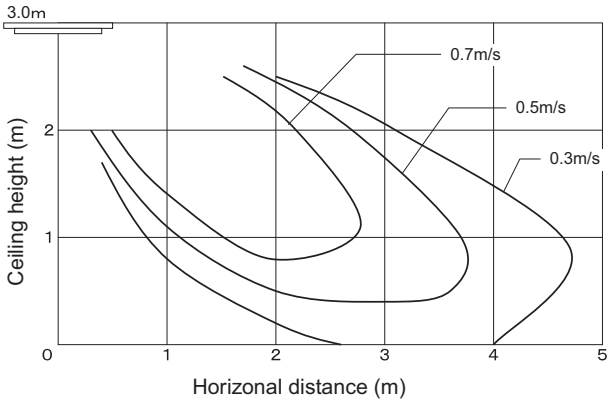

RAV-SM1104UTP-E

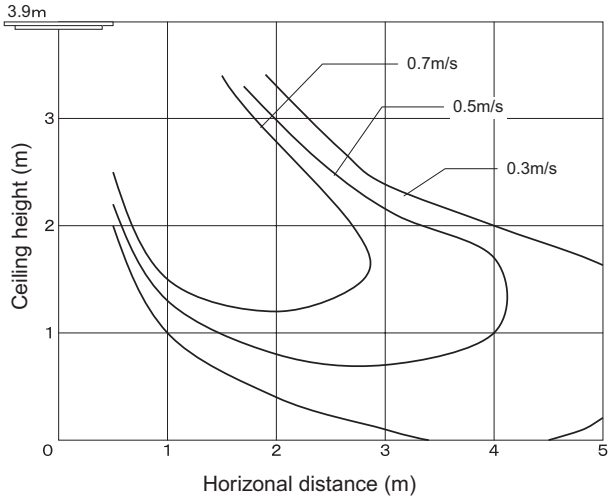

RAV-SM1404UTP-E

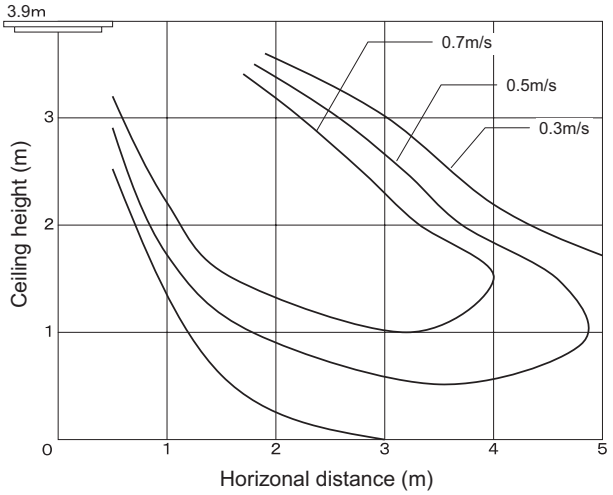

RAV-SM1104UTP-E, RAV-SM1404UTP-E (High ceiling)

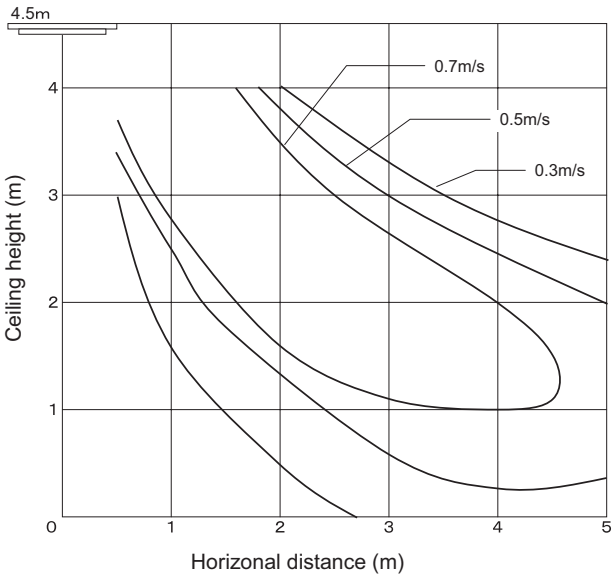

2-1-4. Sound characteristics (NC curve)

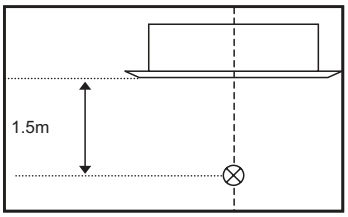

RAV-SM564UTP-E

Fan tap	H	M	L
Sound pressure level (dB(A))	32	29	28

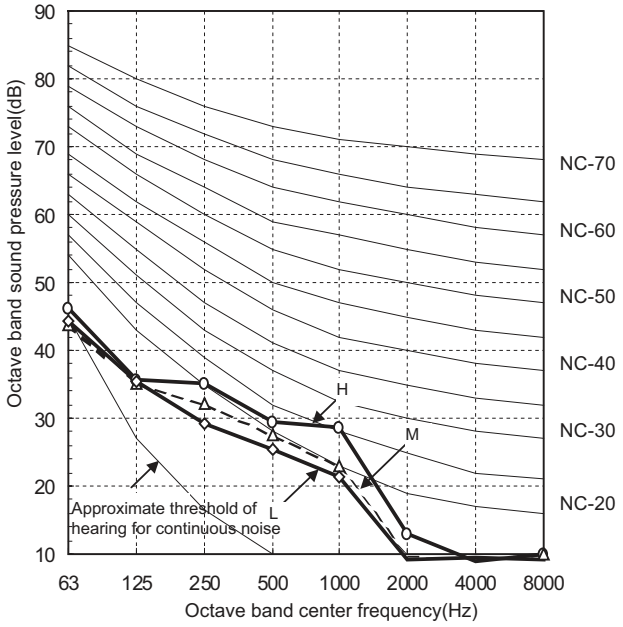

RAV-SM804UTP-E

Fan tap	H	M	L
Sound pressure level (dB(A))	35	31	28

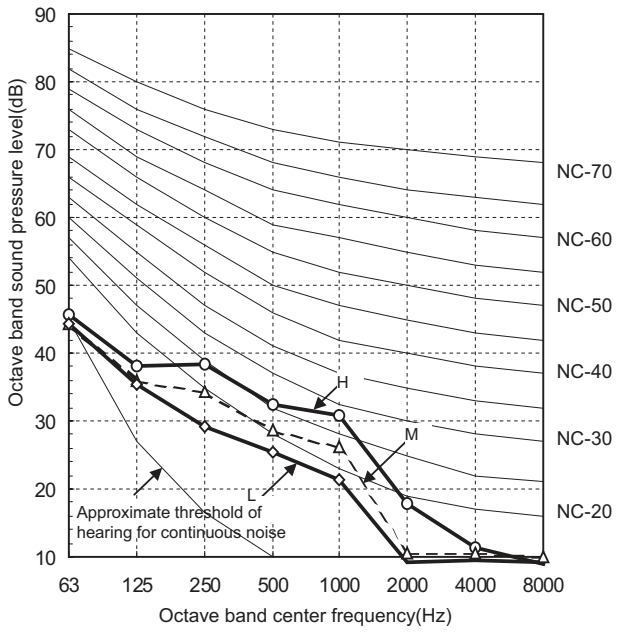

RAV-SM1104UTP-E

Fan tap	H	M	L
Sound pressure level (dB(A))	43	38	33

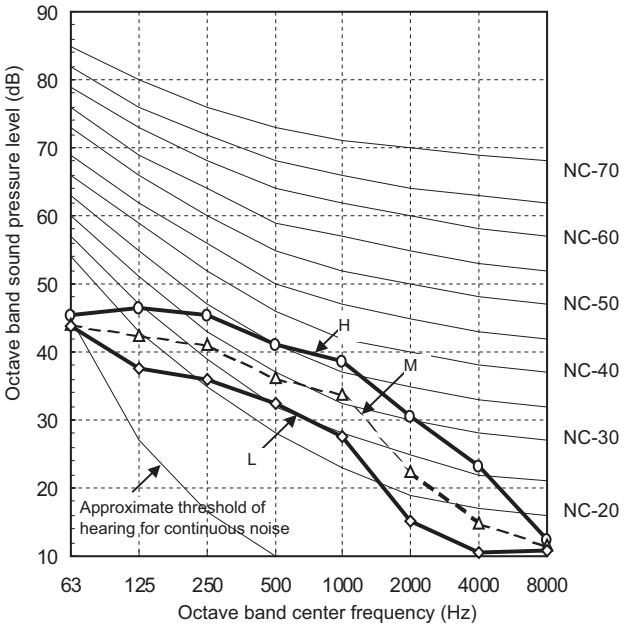

RAV-SM1404UTP-E

Fan tap	H	M	L
Sound pressure level (dB(A))	44	38	34

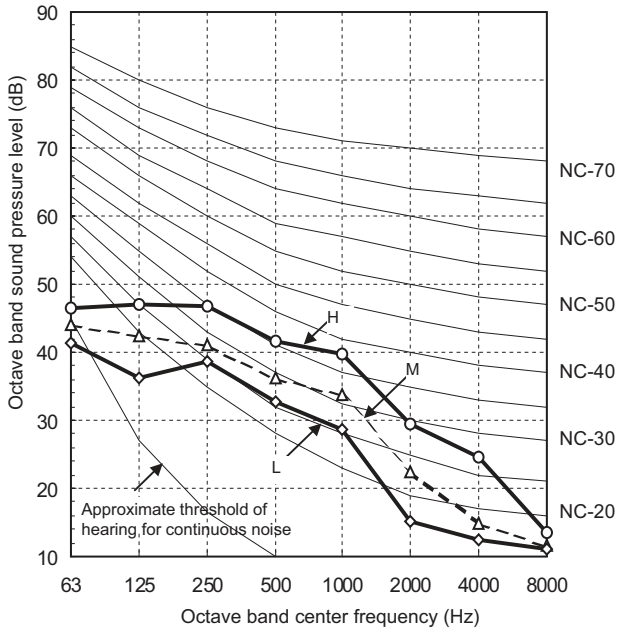

2-2. Compcat 4-way Cassette Type

2-2-1. Dimension

2-2-2. Wiring diagrams

2-2-3. Air throw distance chart

2-2-4. Sound characteristics (NC curve)

2-2-1. Dimension

RAV-SM567MUT-E

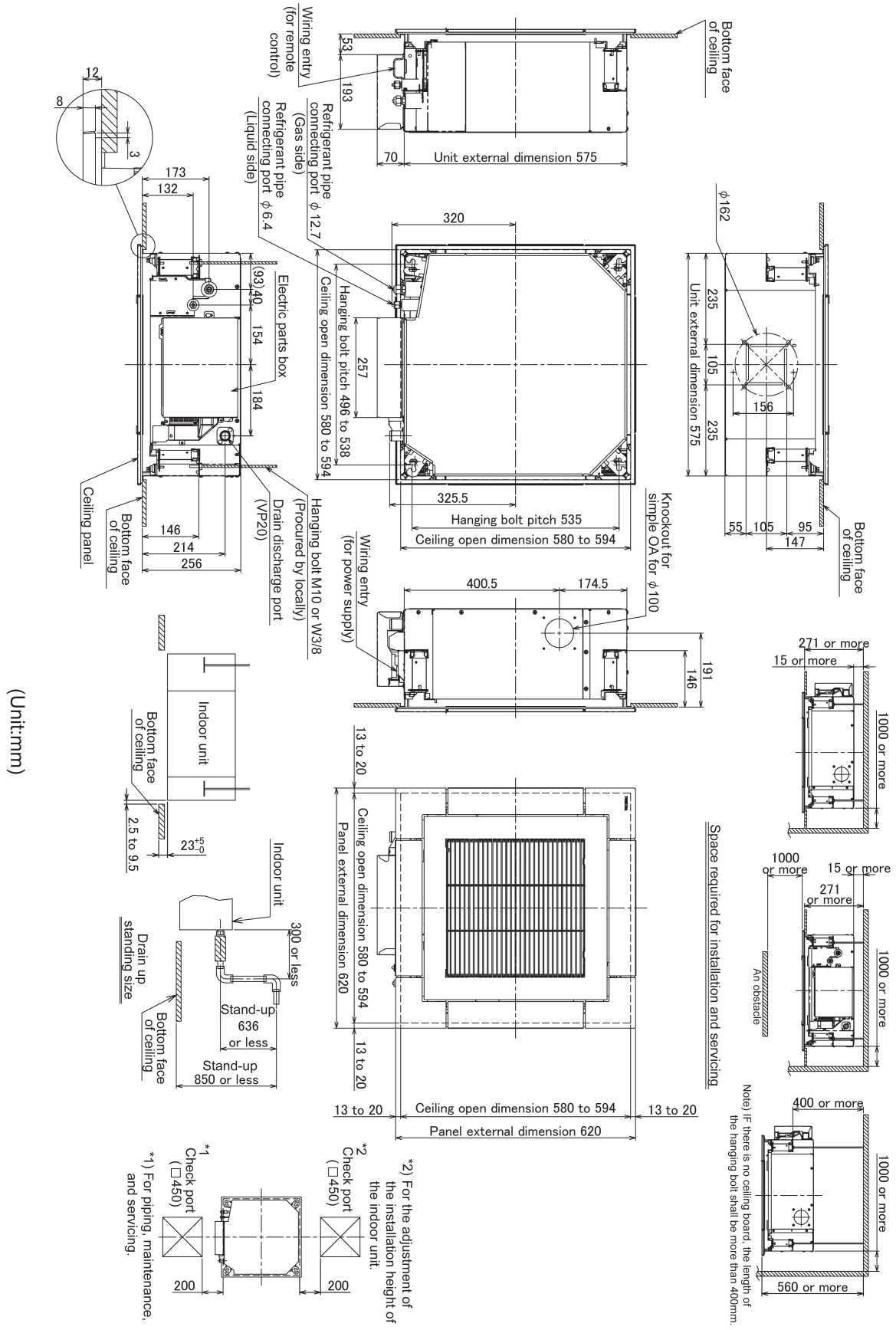

2-2-2. Wiring diagrams

RAV-SM567MUT-E

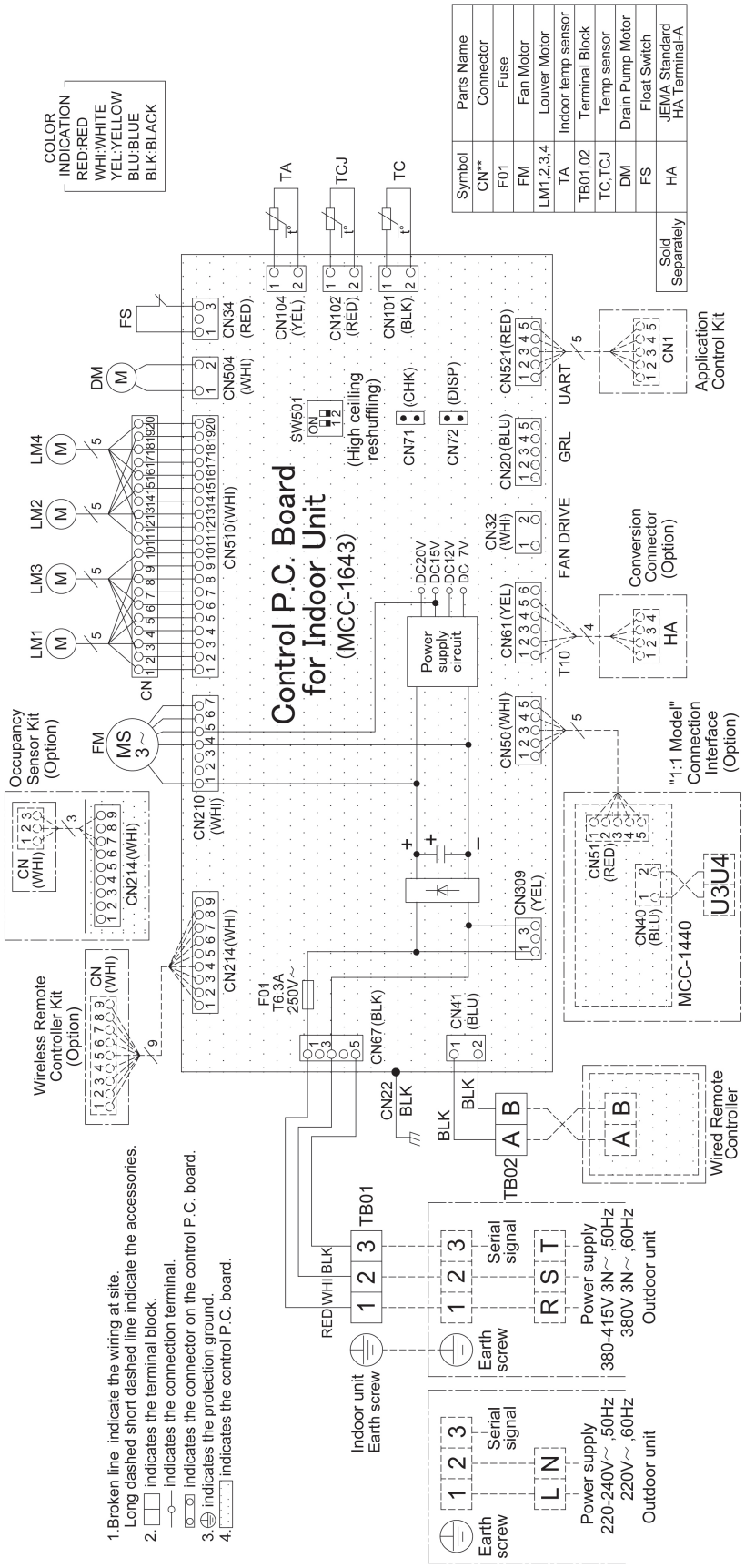

2-2-3. Air throw distance chart

RAV-SM567MUT-E

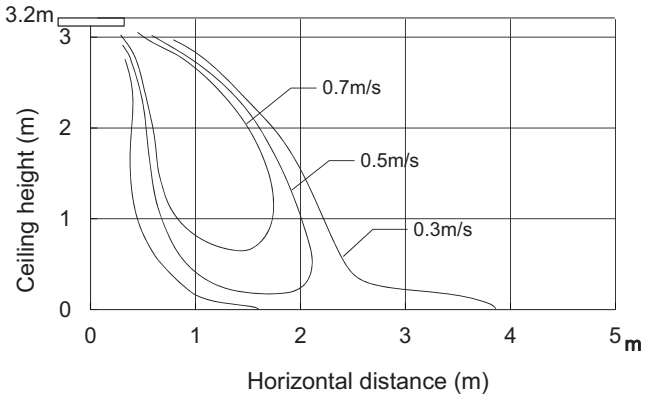

RAV-SM567MUT-E (High ceiling)

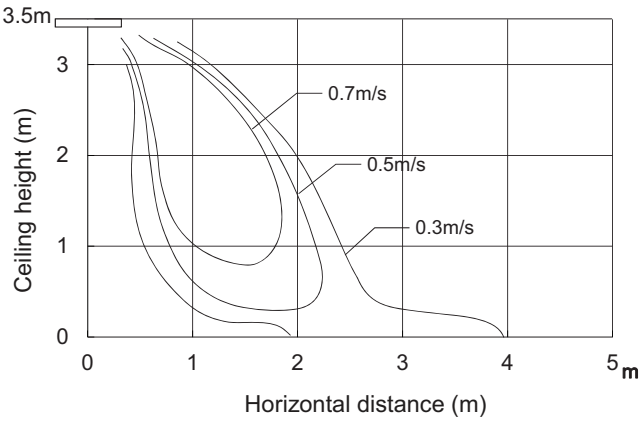

2-2-4. Sound characteristics (NC curve)

RAV-SM567MUT-E

Fan tap	H	M	L
Sound pressure level (dB(A))	44	39	35

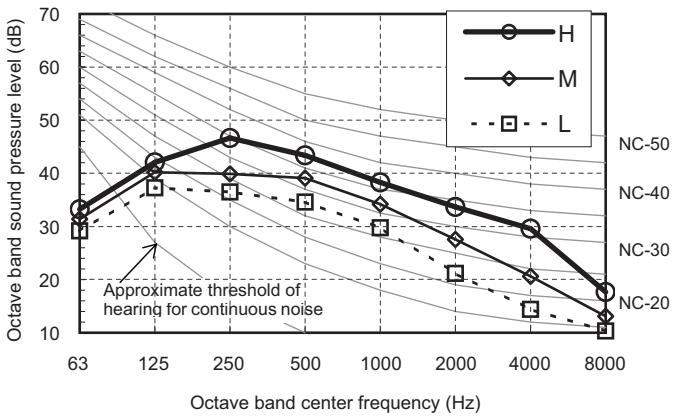

2-3. Ducted Type (-E)

2-3-1. Dimension

2-3-2. Wiring diagrams

2-3-3. Fan static characteristics

2-3-4. Sound characteristics (NC curve)

2-3-1. Dimension

RAV-SM566BTP-E, RAV-SM806BTP-E, RAV-SM1106BTP-E, RAV-SM1406BTP-E

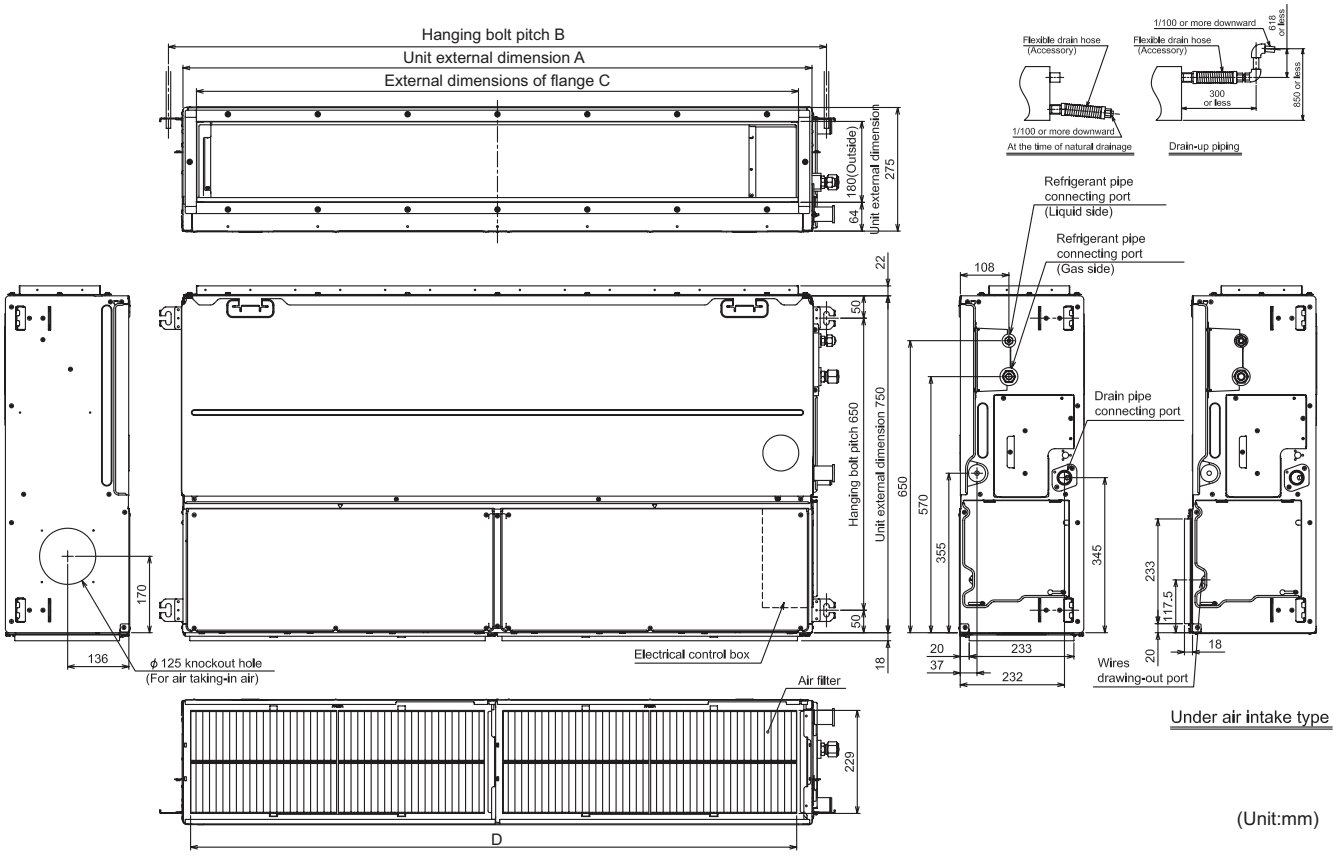

Dimension

	A	B	C	D
RAV-SM566BTP-E	700	765	640	750
RAV-SM806BTP-E	1000	1065	940	1050
RAV-SM1106BTP-E, RAV-SM1406BTP-E	1400	1465	1340	1450

Space required for installation and servicing

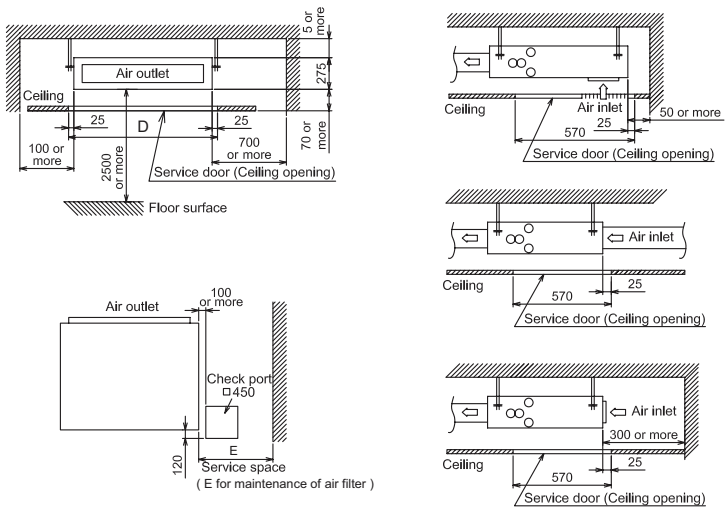

	E
RAV-SM566BTP-E	700
RAV-SM806BTP-E	500
RAV-SM1106BTP-E, RAV-SM1406BTP-E	700

RAV-SM566BTP-E

<Under air intake>

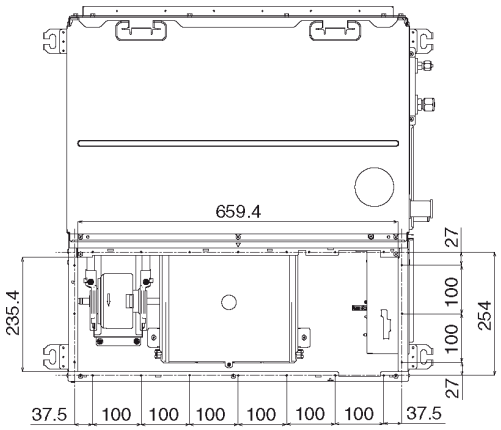

<Back air intake>

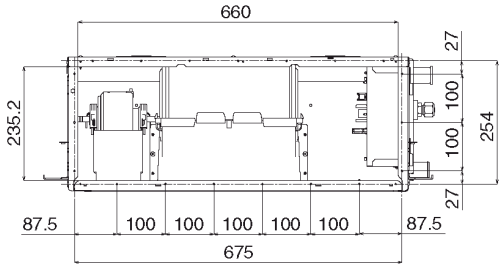

RAV-SM806BTP-E

<Under air intake>

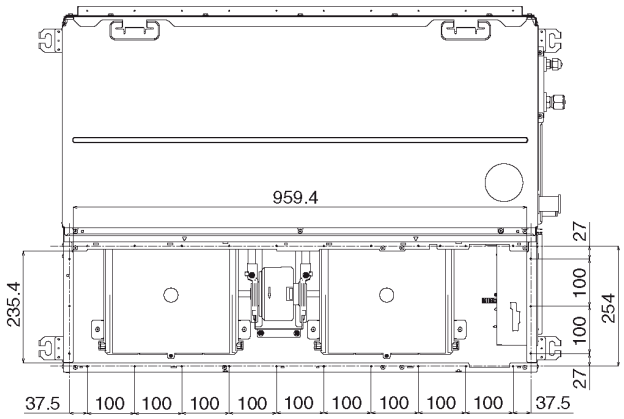

<Back air intake>

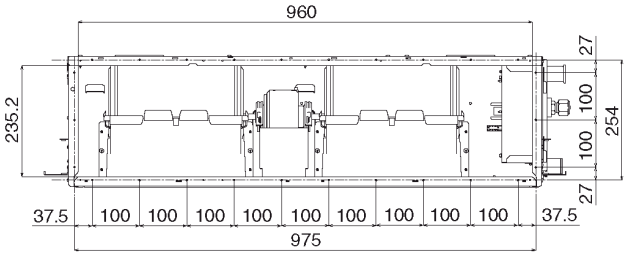

RAV-SM1106BTP-E, RAV-SM1406BTP-E

<Under air intake>

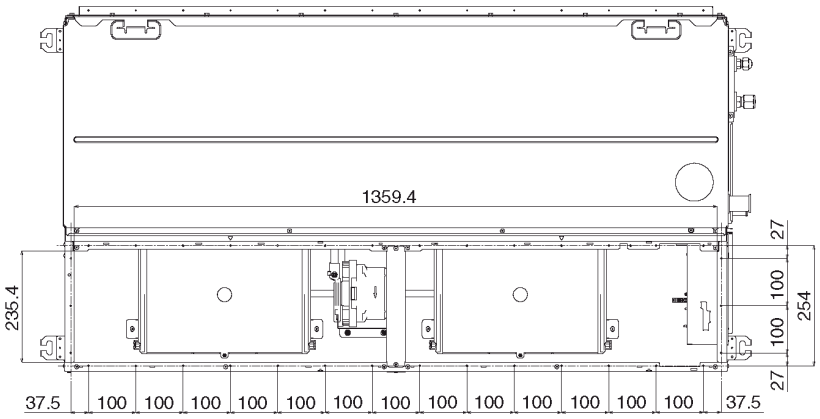

<Back air intake>

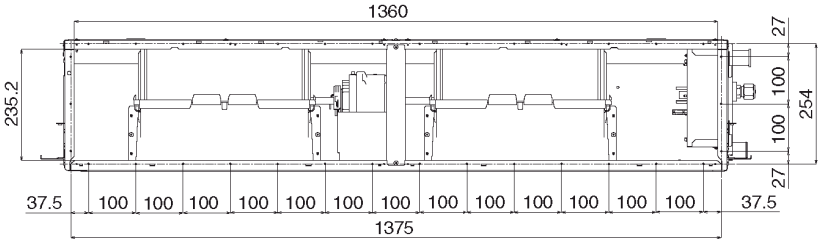

2-3-2. Wiring diagrams

RAV-SM566BTP-E, RAV-SM806BTP-E, RAV-SM1106BTP-E, RAV-SM1406BTP-E

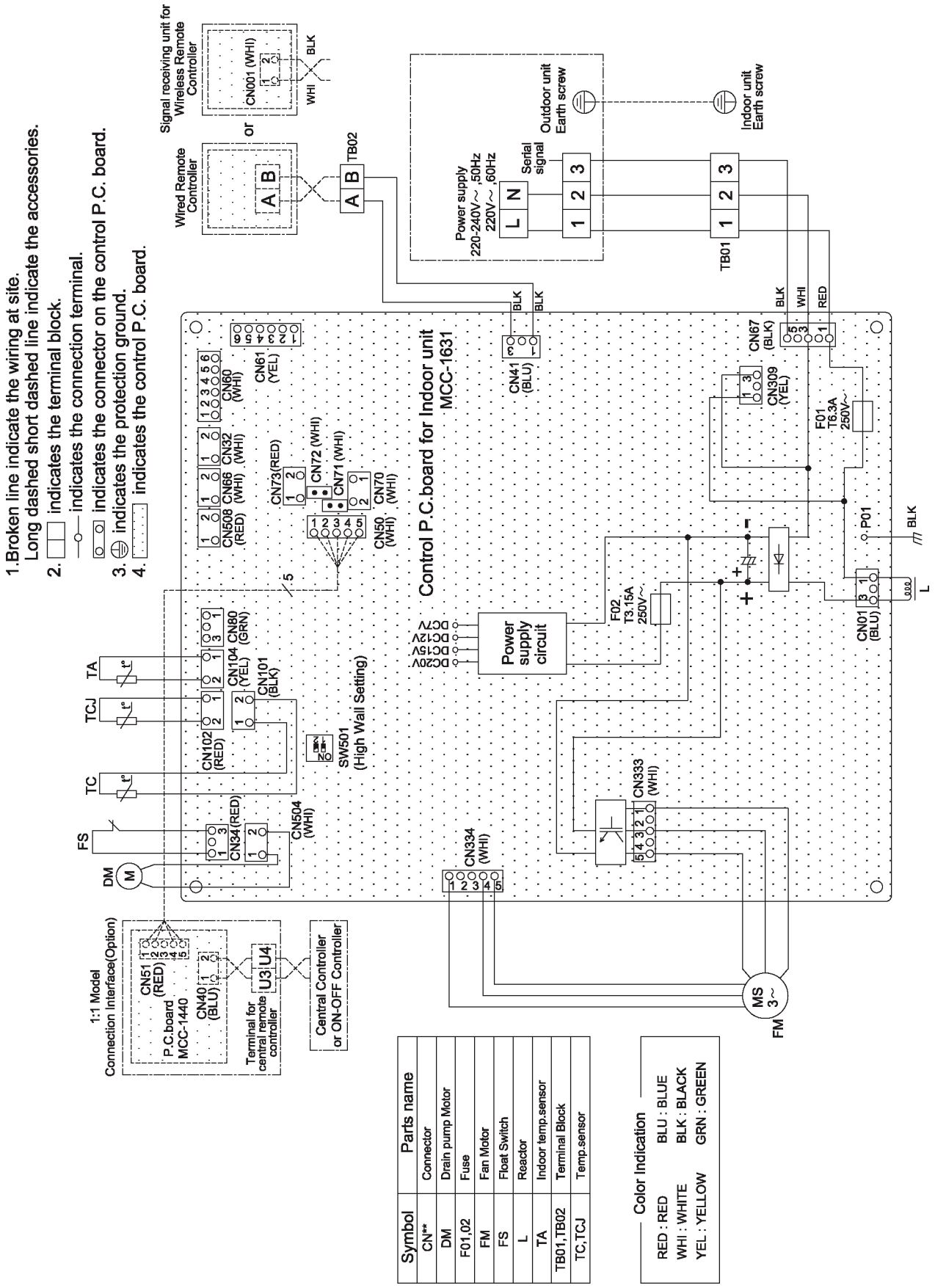

2-3-3. Fan static characteristics

RAV-SM566BTP-E

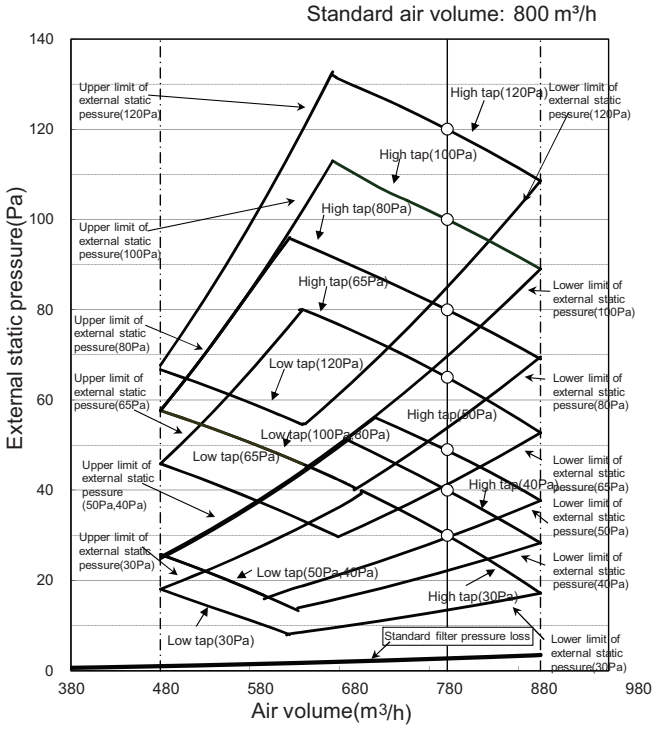

RAV-SM806BTP-E

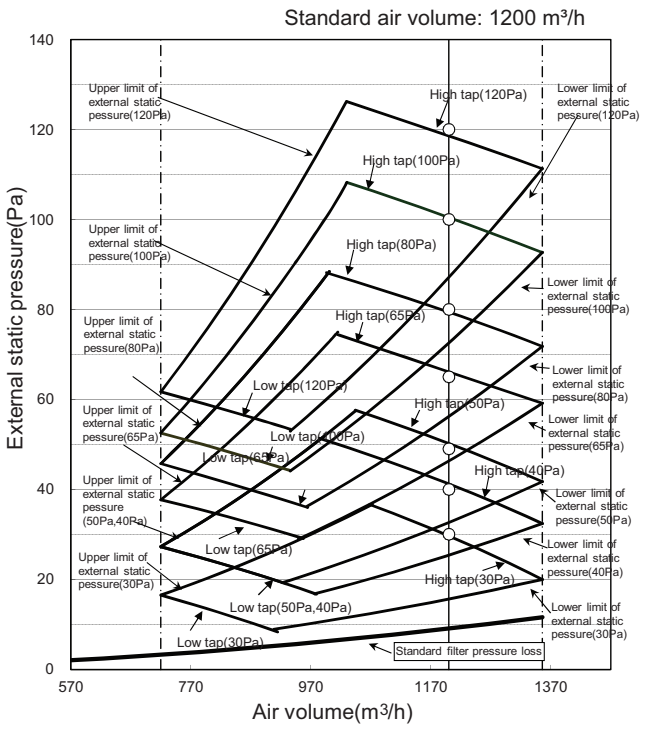

RAV-SM1106BTP-E, RAV-SM1406BTP-E

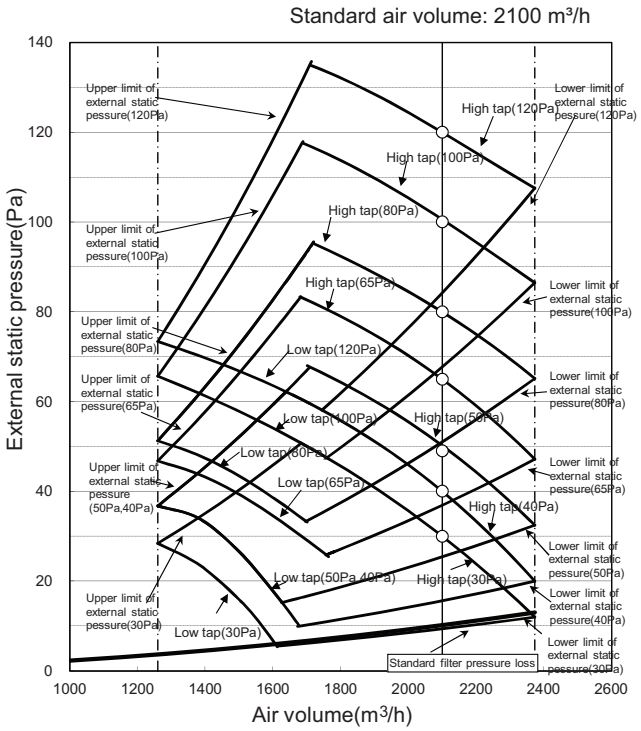

2-3-4. Sound characteristics (NC curve)

RAV-SM566BTP-E

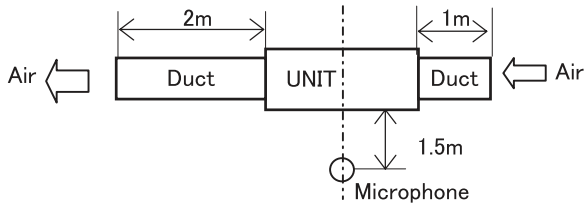

Measuring location

External static pressure 30Pa

FAN tap	H	M	L
Sound pressure level (dB(A))	33	29	25

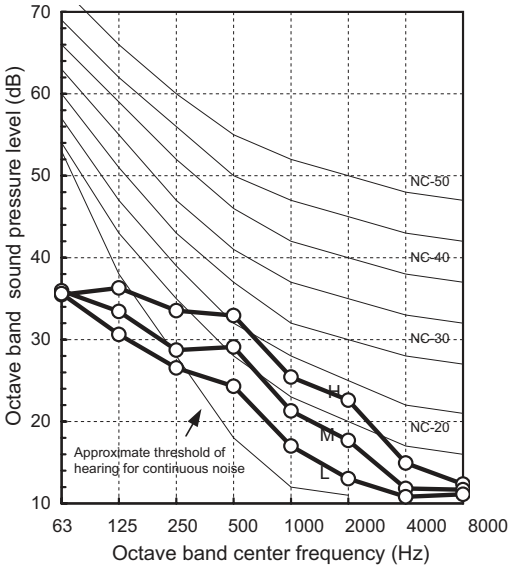

External static pressure 40Pa

FAN tap	H	M	L
Sound pressure level (dB(A))	34	30	26

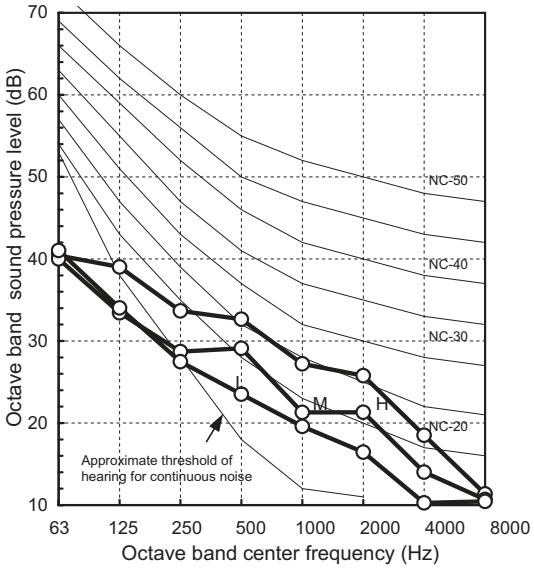

External static pressure 50Pa

FAN tap	H	M	L
Sound pressure level (dB(A))	35	31	26

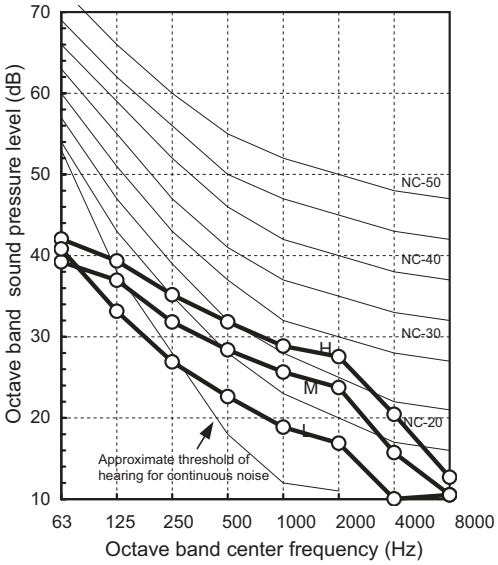

External static pressure 65Pa

FAN tap	H	M	L
Sound pressure level (dB(A))	36	32	29

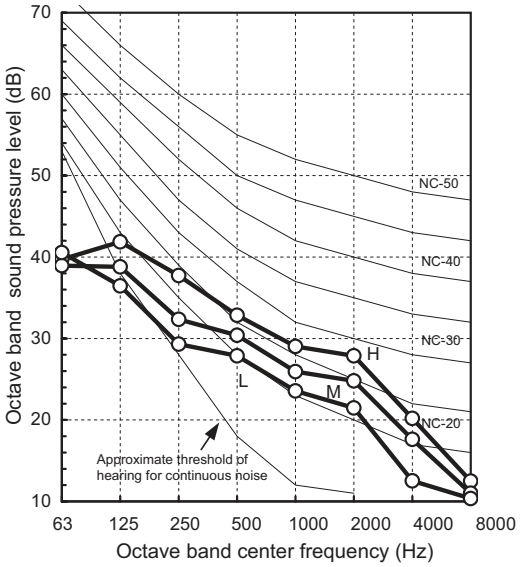

External static pressure 80Pa

FAN tap	H	M	L
Sound pressure level (dB(A))	37	33	31

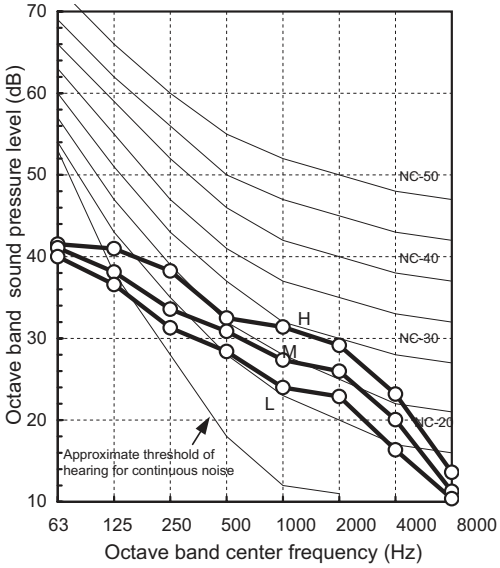

External static pressure 100Pa

FAN tap	H	M	L
Sound pressure level (dB(A))	38	35	31

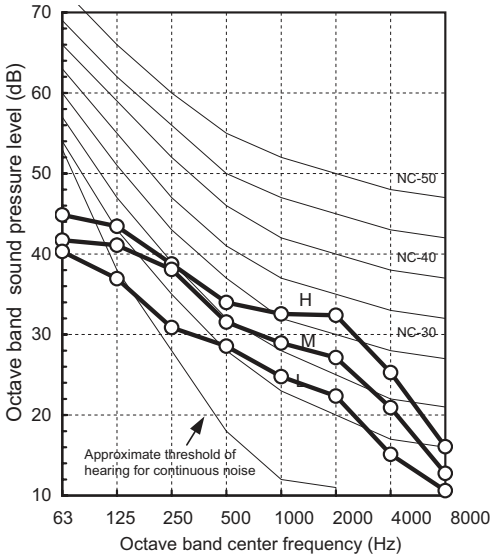

External static pressure 120Pa

FAN tap	H	M	L
Sound pressure level (dB(A))	39	35	31

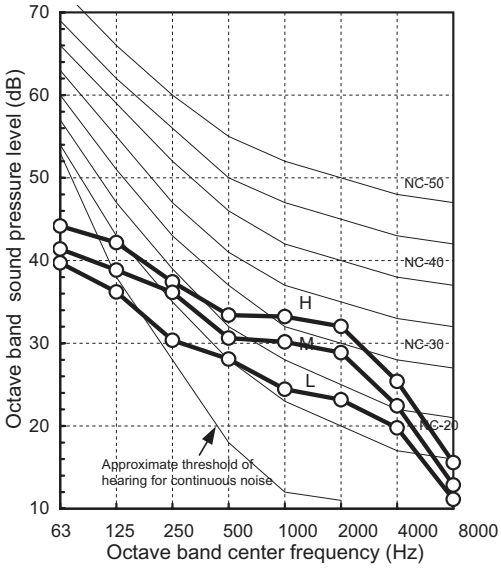

RAV-SM806BTP-E

External static pressure 30Pa

FAN tap	H	M	L
Sound pressure level (dB(A))	34	30	26

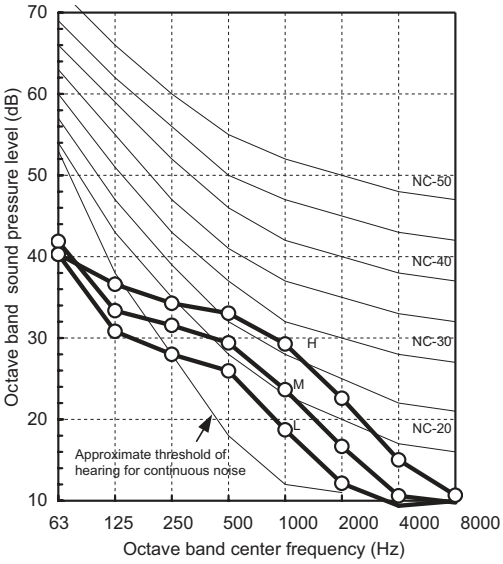

External static pressure 40Pa

FAN tap	H	M	L
Sound pressure level (dB(A))	35	32	29

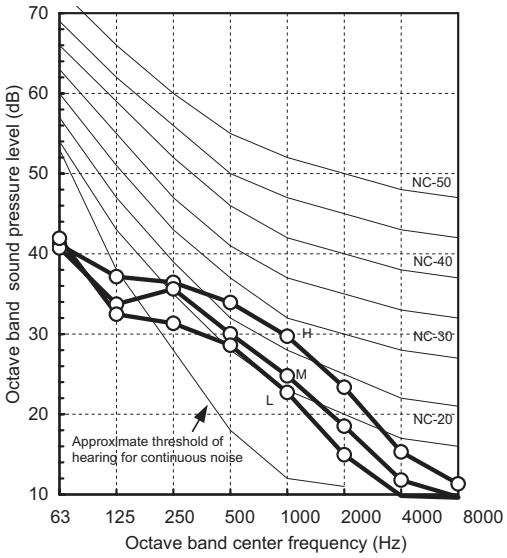

External static pressure 50Pa

FAN tap	H	M	L
Sound pressure level (dB(A))	38	33	29

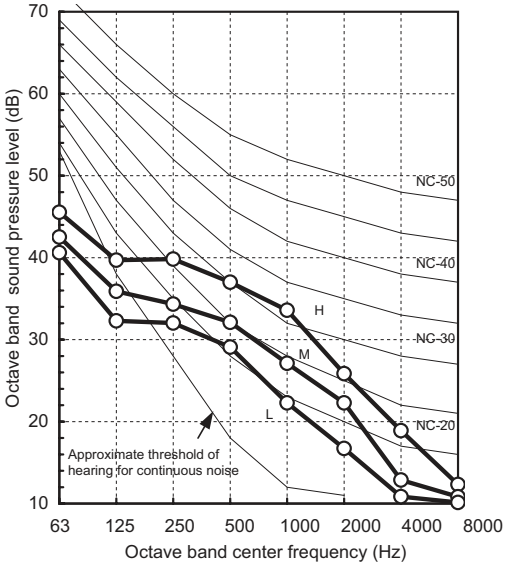

External static pressure 65Pa

FAN tap	H	M	L
Sound pressure level (dB(A))	39	35	32

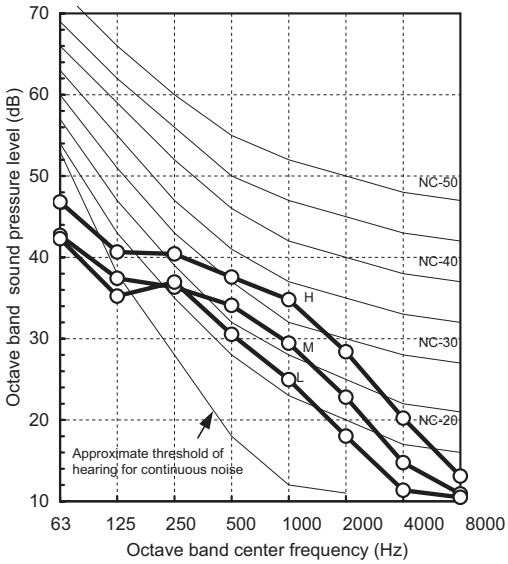

External static pressure 80Pa

FAN tap	H	M	L
Sound pressure level (dB(A))	42	38	34

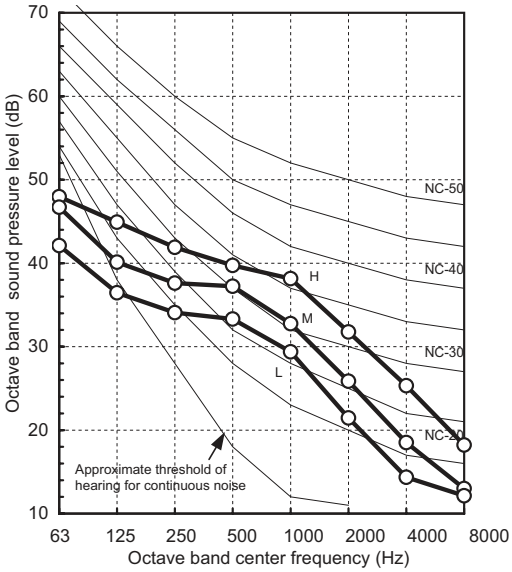

External static pressure 100Pa

FAN tap	H	M	L
Sound pressure level (dB(A))	42	39	33

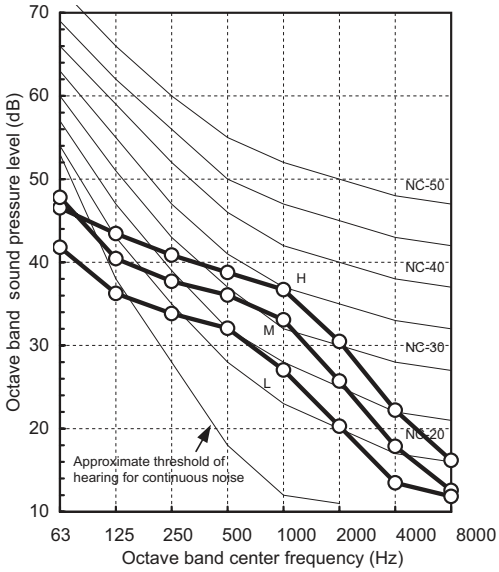

External static pressure 120Pa

FAN tap	H	M	L
Sound pressure level (dB(A))	44	41	34

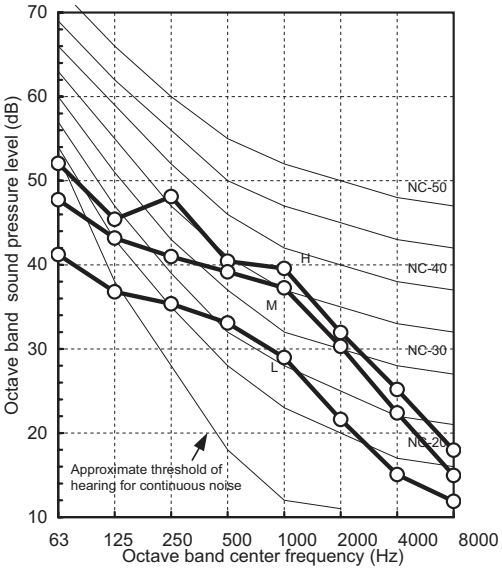

RAV-SM1106BTP-E, RAV-SM1406BTP-E

External static pressure 30Pa

FAN tap	H	M	L
Sound pressure level (dB(A))	39	36	33

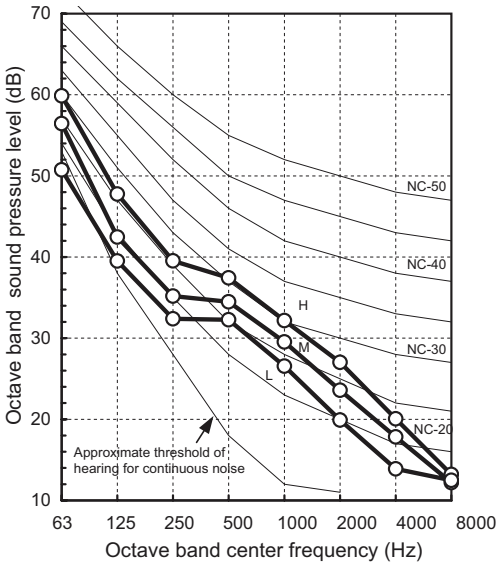

External static pressure 40Pa

FAN tap	H	M	L
Sound pressure level (dB(A))	39	36	33

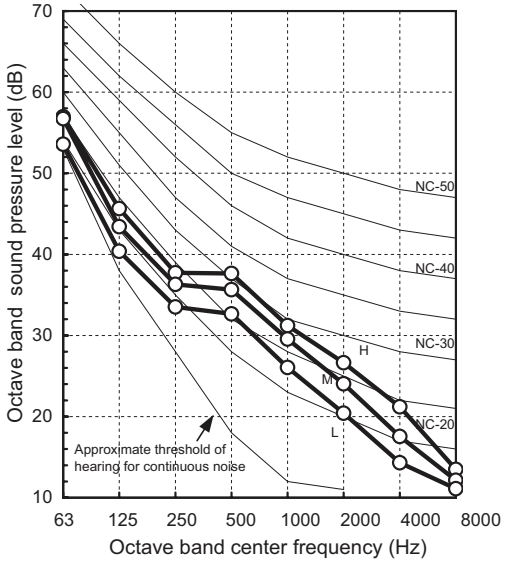

External static pressure 50Pa

FAN tap	H	M	L
Sound pressure level (dB(A))	40	36	33

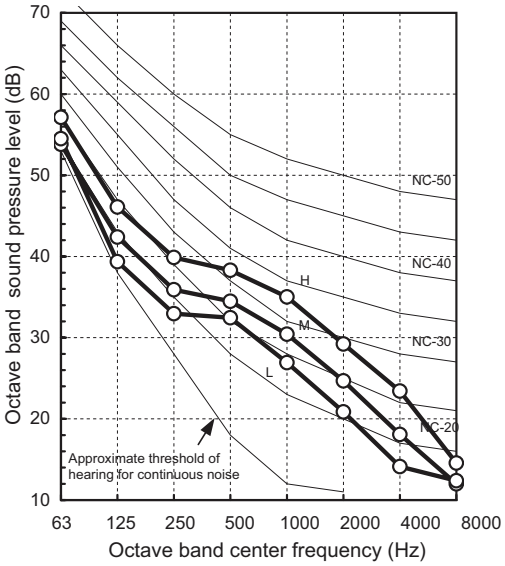

External static pressure 65Pa

FAN tap	H	M	L
Sound pressure level (dB(A))	41	39	36

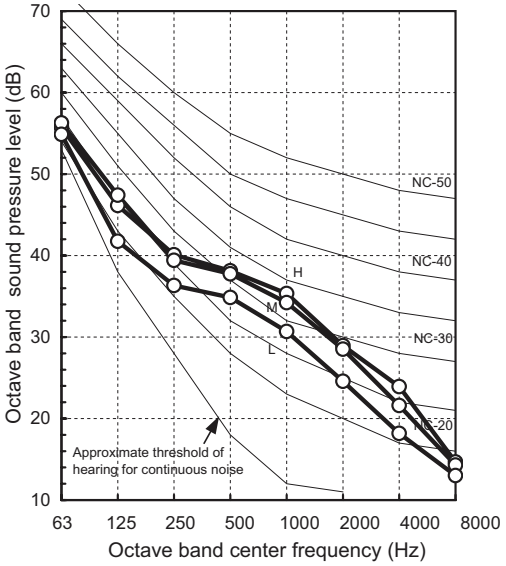

External static pressure 80Pa

FAN tap	H	M	L
Sound pressure level (dB(A))	41	40	36

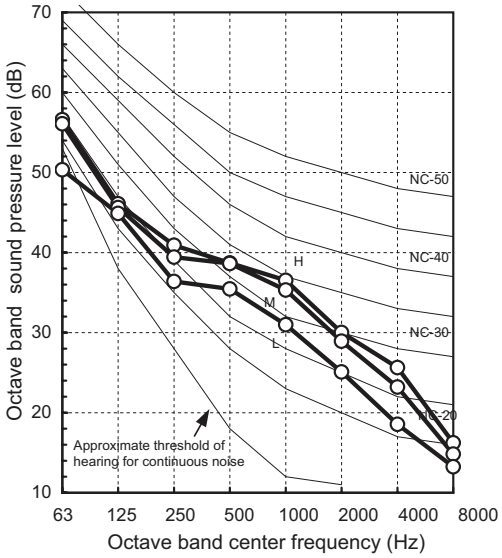

External static pressure 100Pa

FAN tap	H	M	L
Sound pressure level (dB(A))	43	41	39

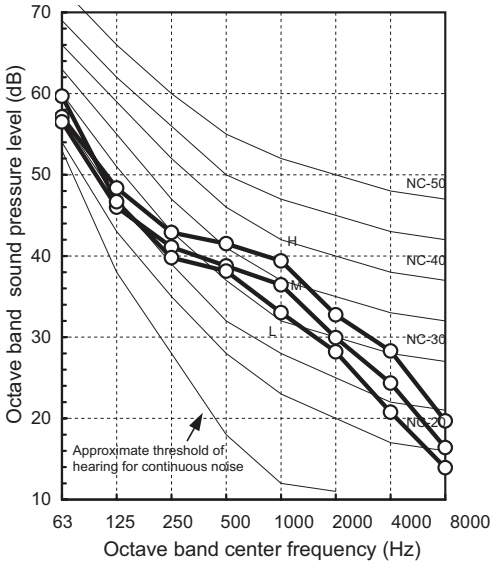

External static pressure 120Pa

FAN tap	H	M	L
Sound pressure level (dB(A))	44	42	39

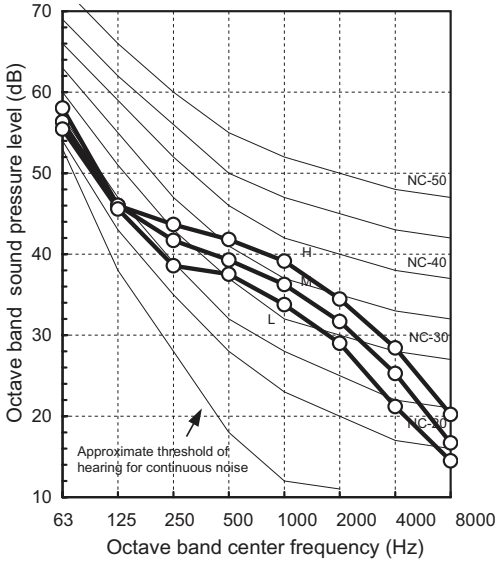

2-4. Ducted Type (-E1)

2-4-1. Dimension

2-4-2. Wiring diagrams

2-4-3. Fan static characteristics

2-4-4. Sound characteristics (NC curve)

2-4-1. Dimension

RAV-SM566BTP-E1, RAV-SM806BTP-E1, RAV-SM1106BTP-E1

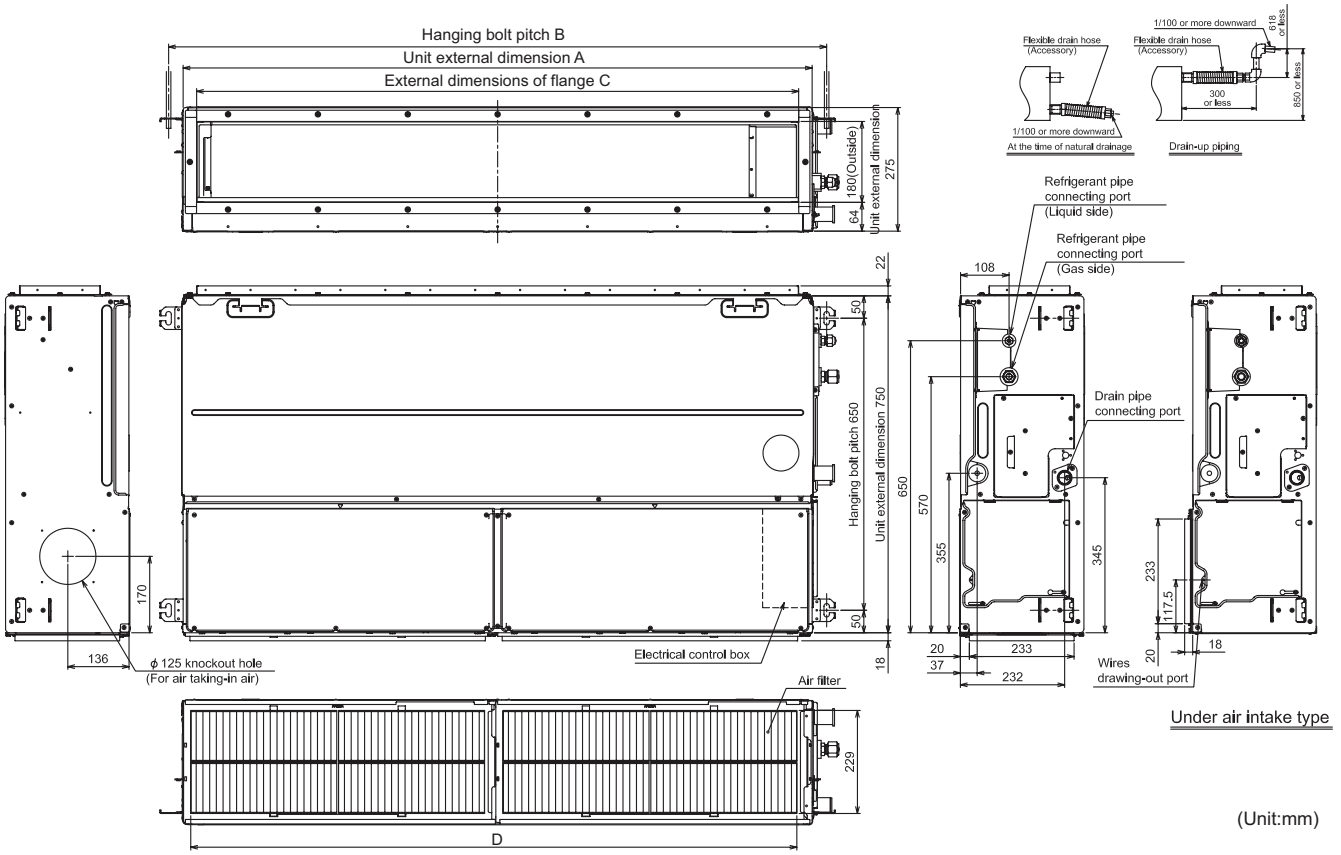

Dimension

	A	B	C	D
RAV-SM566BTP-E1	700	765	640	750
RAV-SM806BTP-E1	1000	1065	940	1050
RAV-SM1106BTP-E1	1400	1465	1340	1450

Space required for installation and servicing

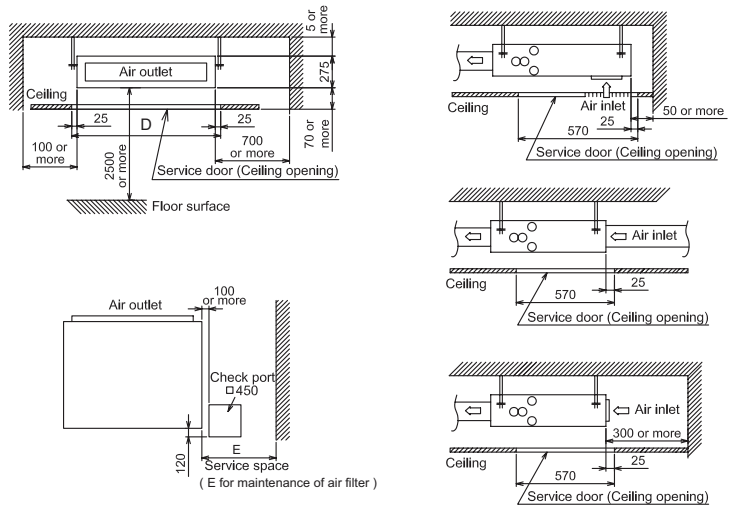

	E
RAV-SM566BTP-E1	700
RAV-SM806BTP-E1	500
RAV-SM1106BTP-E1	700

RAV-SM566BTP-E1

<Under air intake>

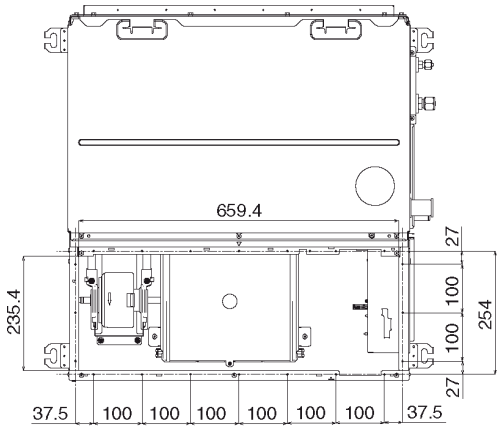

<Back air intake>

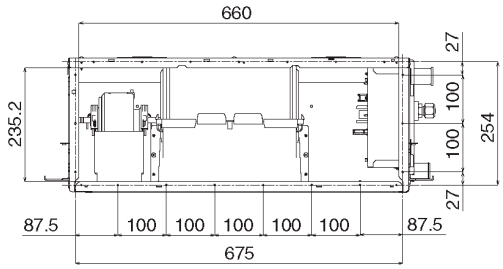

RAV-SM806BTP-E1

<Under air intake>

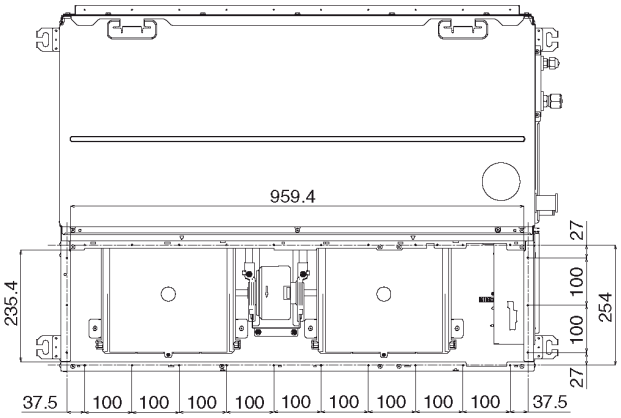

<Back air intake>

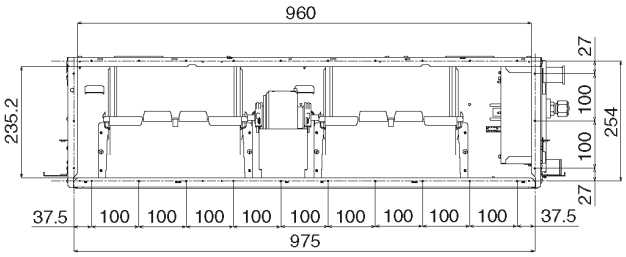

RAV-SM1106BTP-E1

<Under air intake>

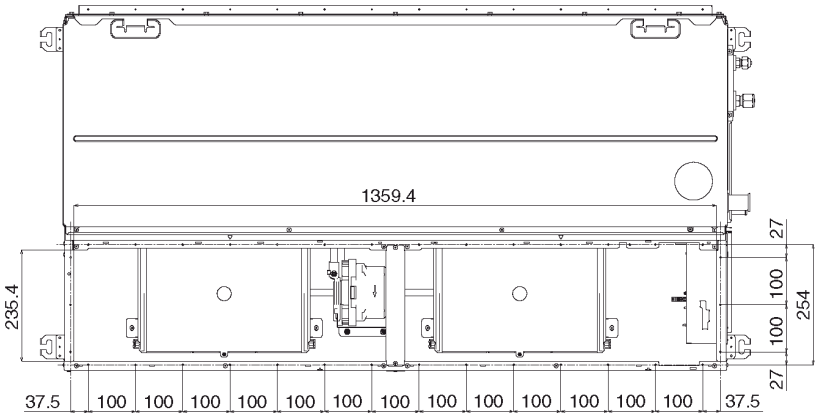

<Back air intake>

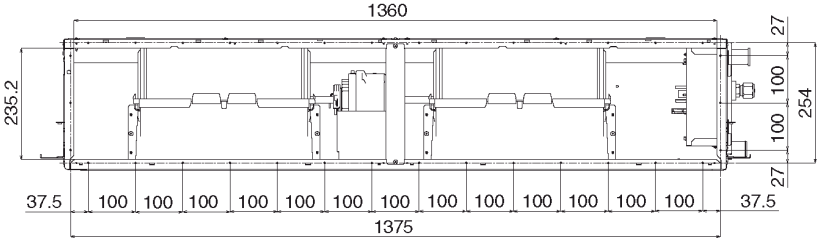

2-4-2. Wiring diagrams

RAV-SM566BTP-E1, RAV-SM806BTP-E1, RAV-SM1106BTP-E1

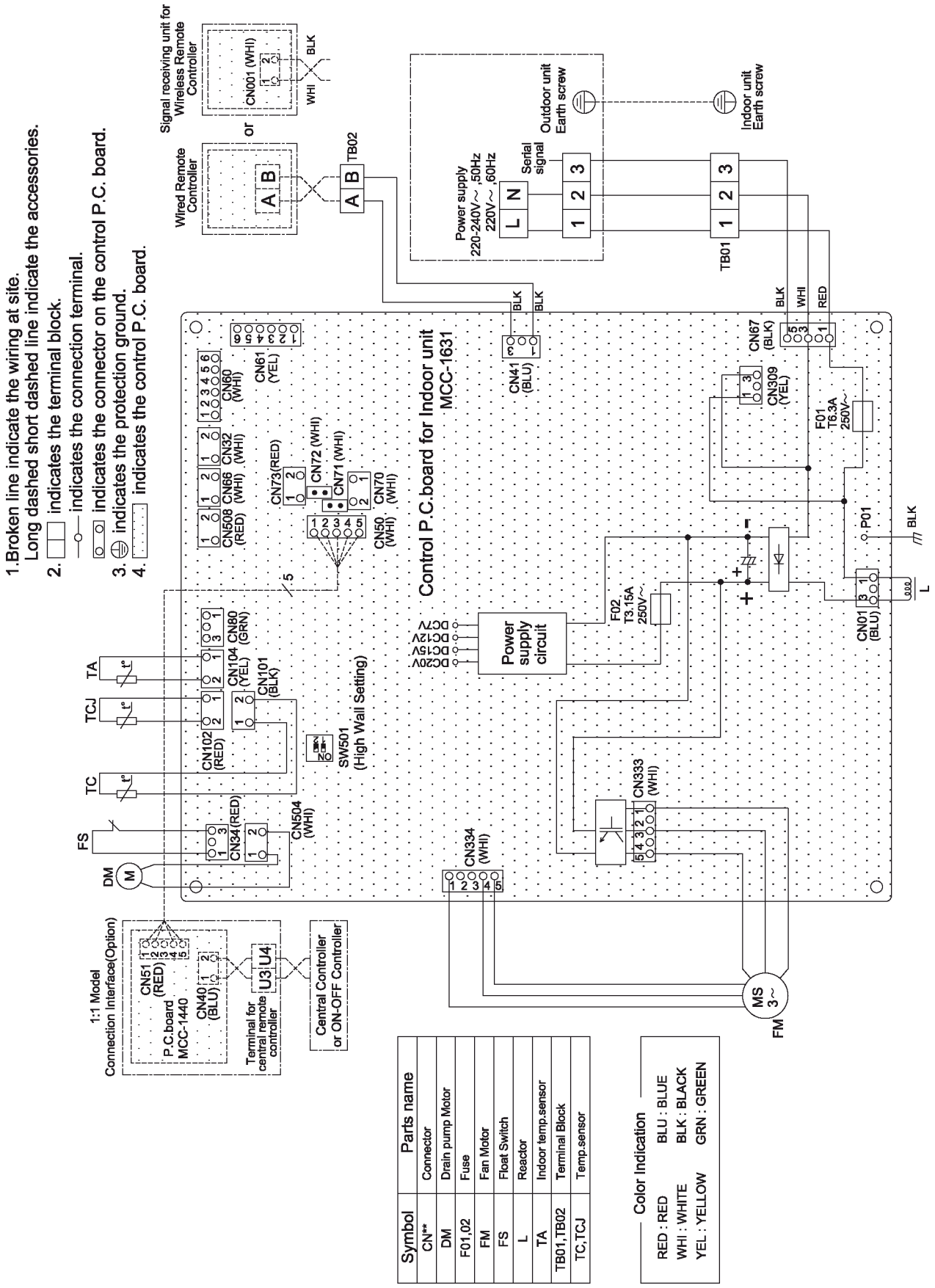

2-4-3. Fan static characteristics

RAV-SM566BTP-E

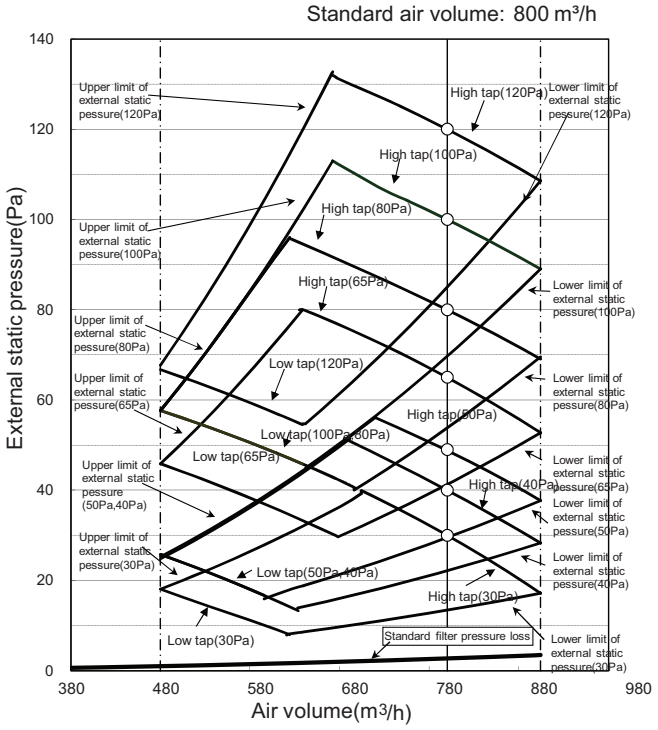

RAV-SM806BTP-E

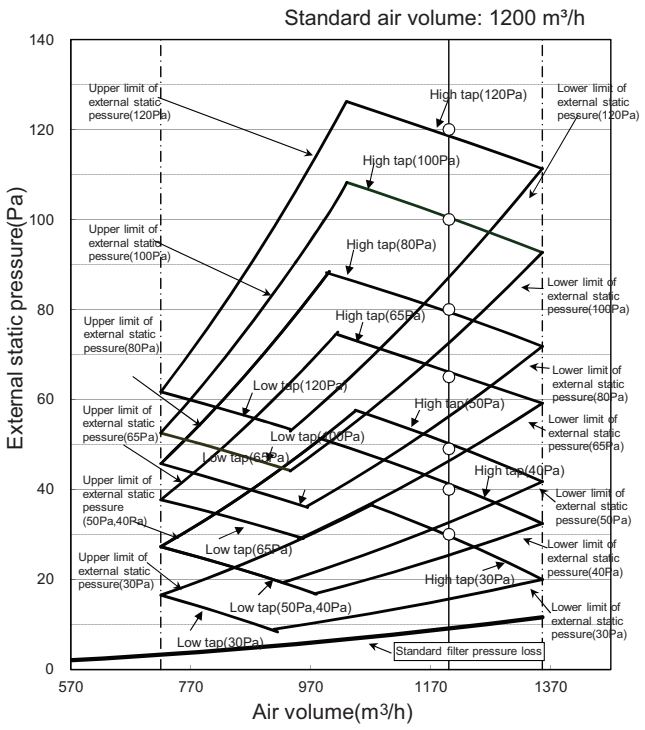

RAV-SM1106BTP-E1

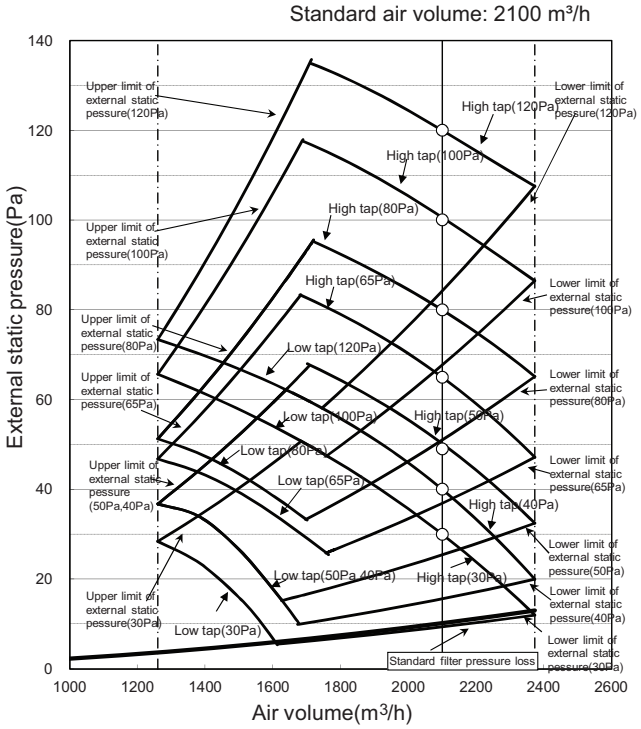

2-4-4. Sound characteristics (NC curve)

RAV-SM566BTP-E1

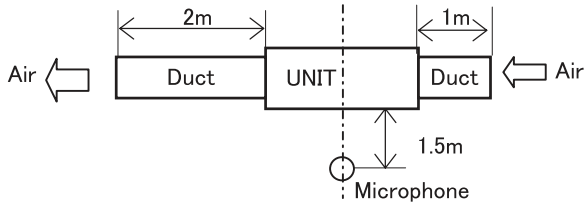

Measuring location

External static pressure 30Pa

FAN tap	H	M	L
Sound pressure level (dB(A))	33	29	25

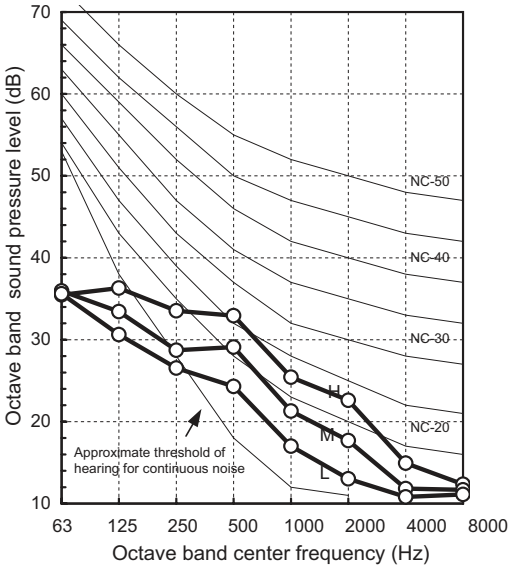

External static pressure 40Pa

FAN tap	H	M	L
Sound pressure level (dB(A))	34	30	26

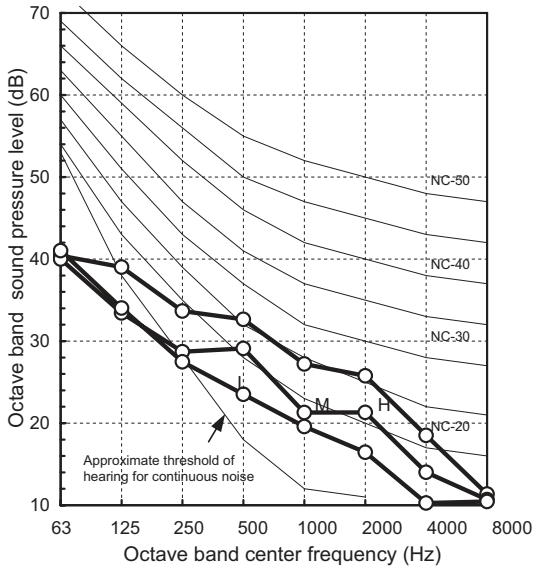

External static pressure 50Pa

FAN tap	H	M	L
Sound pressure level (dB(A))	35	31	26

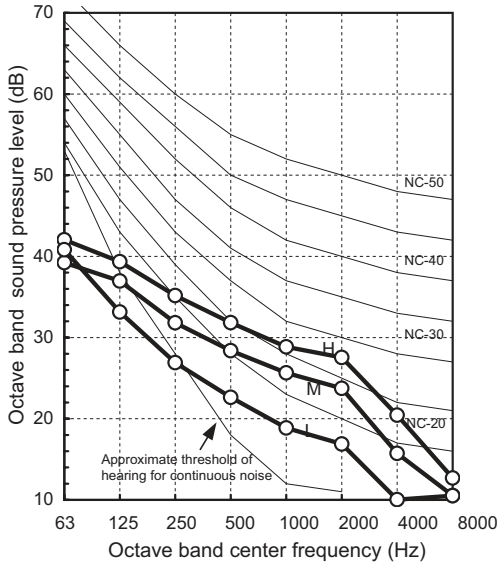

External static pressure 65Pa

FAN tap	H	M	L
Sound pressure level (dB(A))	36	32	29

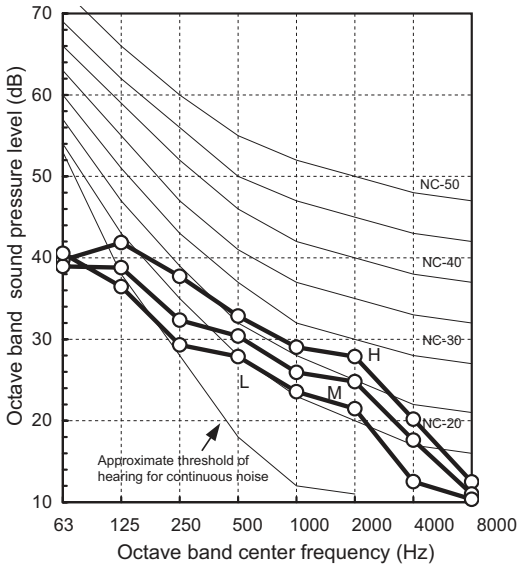

External static pressure 80Pa

FAN tap	H	M	L
Sound pressure level (dB(A))	37	33	31

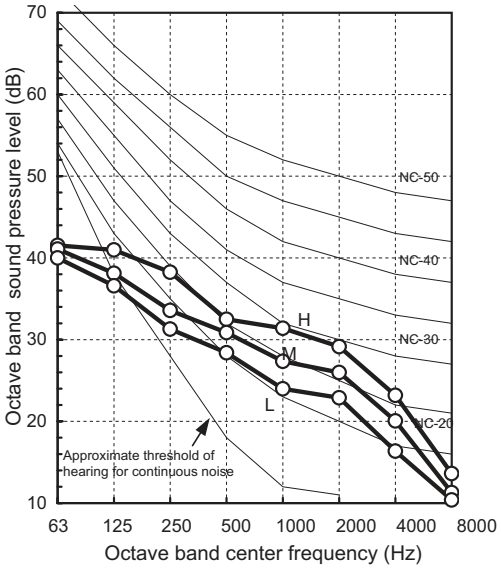

External static pressure 100Pa

FAN tap	H	M	L
Sound pressure level (dB(A))	38	35	31

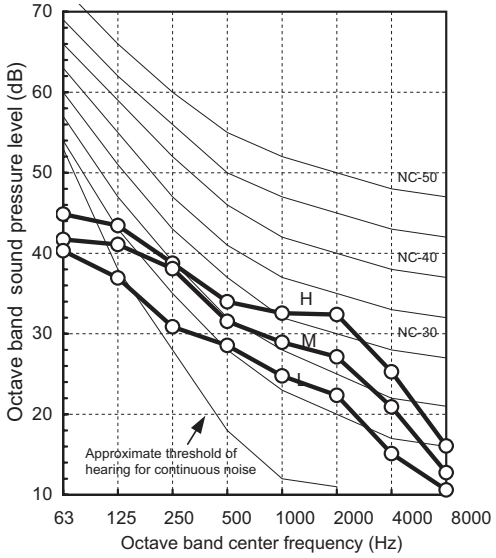

External static pressure 120Pa

FAN tap	H	M	L
Sound pressure level (dB(A))	39	35	31

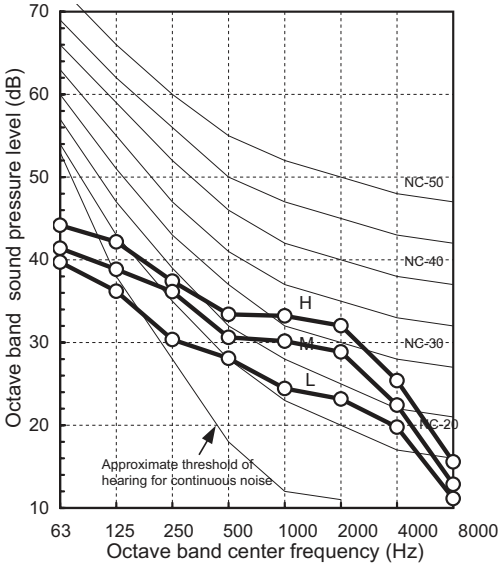

RAV-SM806BTP-E1

External static pressure 30Pa

FAN tap	H	M	L
Sound pressure level (dB(A))	34	30	26

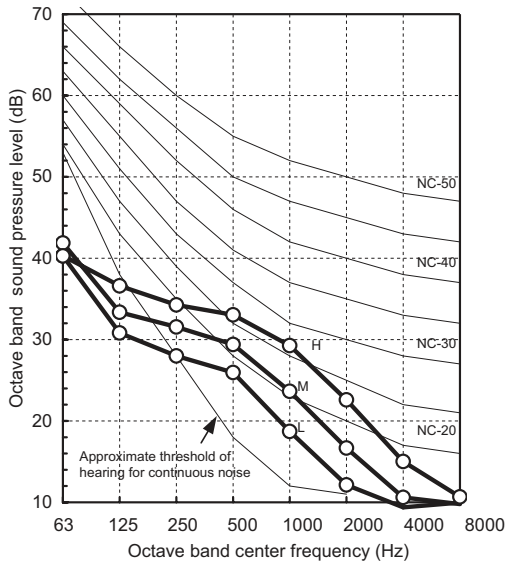

External static pressure 40Pa

FAN tap	H	M	L
Sound pressure level (dB(A))	35	32	29

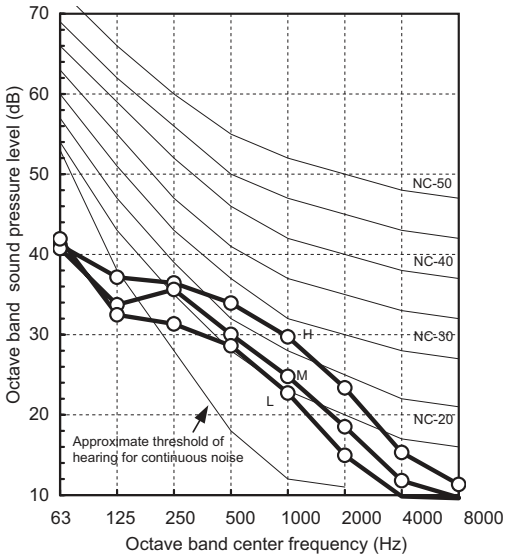

External static pressure 50Pa

FAN tap	H	M	L
Sound pressure level (dB(A))	38	33	29

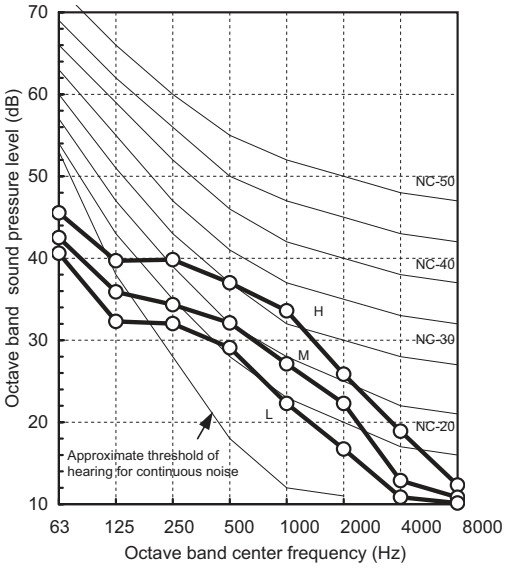

External static pressure 65Pa

FAN tap	H	M	L
Sound pressure level (dB(A))	39	35	32

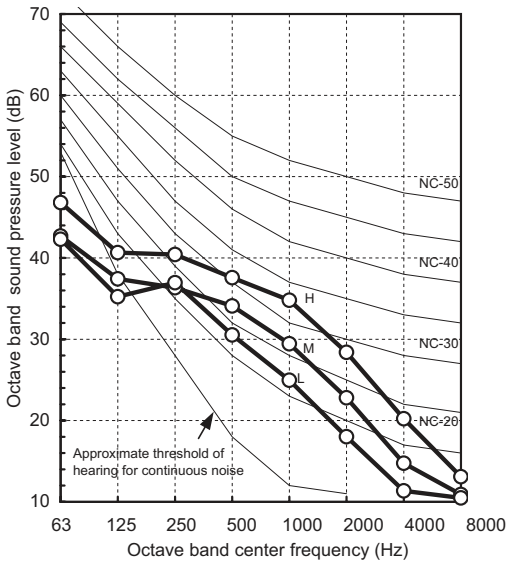

External static pressure 80Pa

FAN tap	H	M	L
Sound pressure level (dB(A))	42	38	34

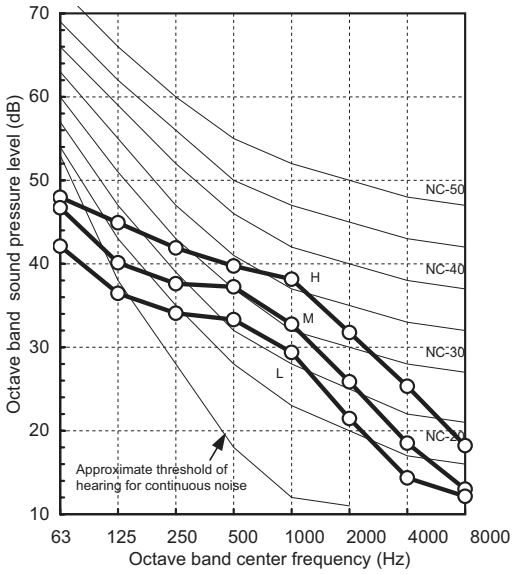

External static pressure 100Pa

FAN tap	H	M	L
Sound pressure level (dB(A))	42	39	33

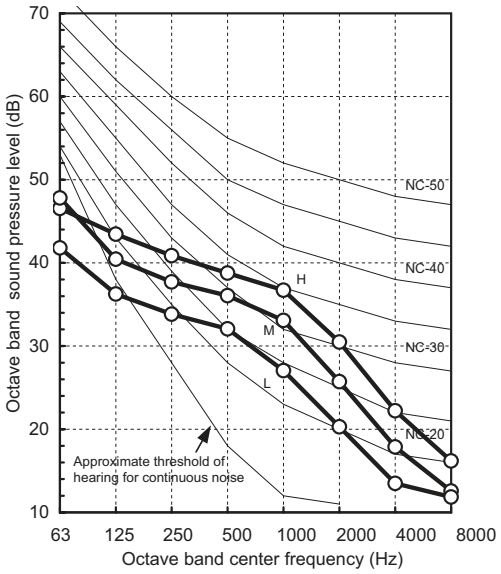

External static pressure 120Pa

FAN tap	H	M	L
Sound pressure level (dB(A))	44	41	34

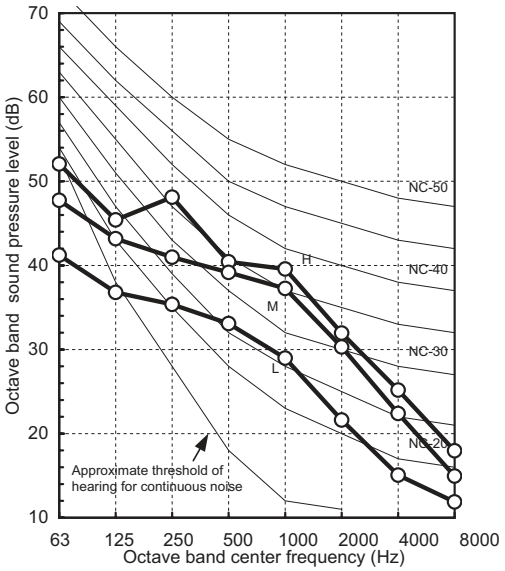

RAV-SM1106BTP-E1

External static pressure 30Pa

FAN tap	H	M	L
Sound pressure level (dB(A))	39	36	33

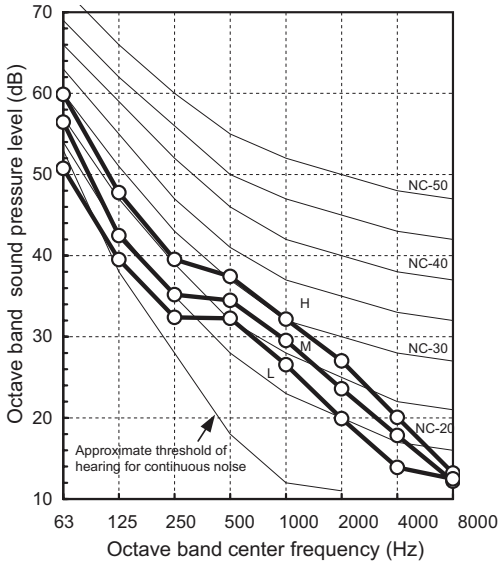

External static pressure 40Pa

FAN tap	H	M	L
Sound pressure level (dB(A))	39	36	33

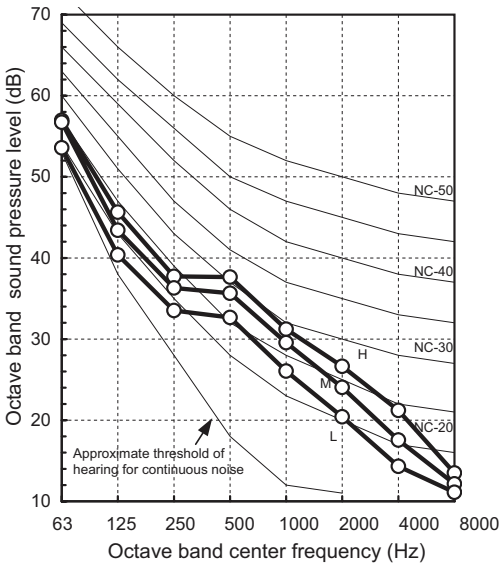

External static pressure 50Pa

FAN tap	H	M	L
Sound pressure level (dB(A))	40	36	33

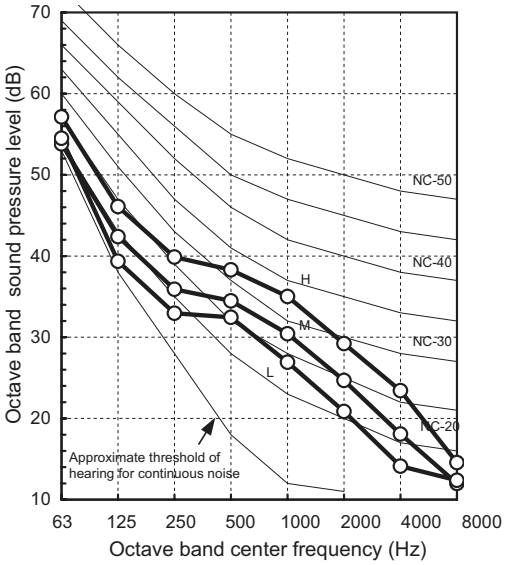

External static pressure 65Pa

FAN tap	H	M	L
Sound pressure level (dB(A))	41	39	36

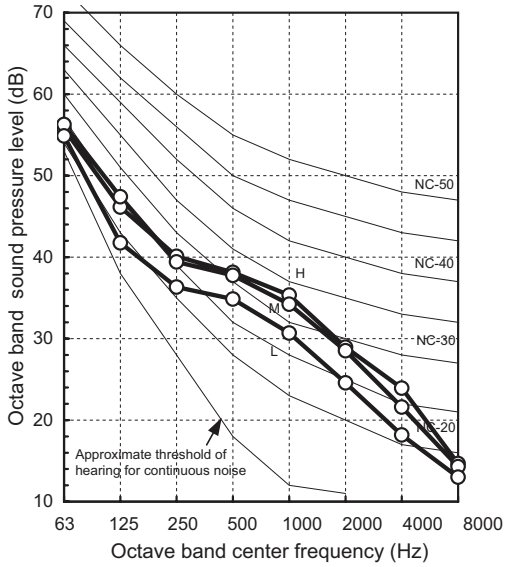

External static pressure 80Pa

FAN tap	H	M	L
Sound pressure level (dB(A))	41	40	36

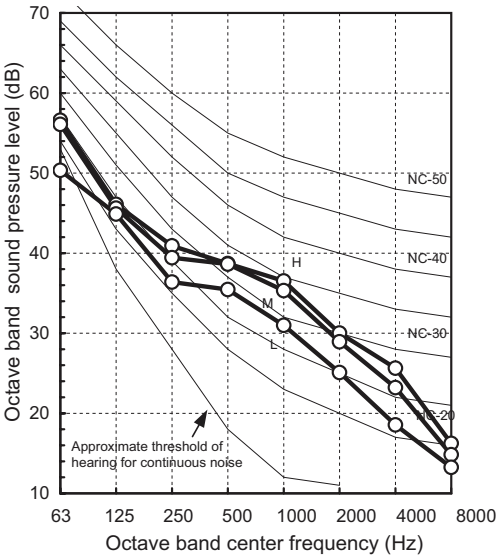

External static pressure 100Pa

FAN tap	H	M	L
Sound pressure level (dB(A))	43	41	39

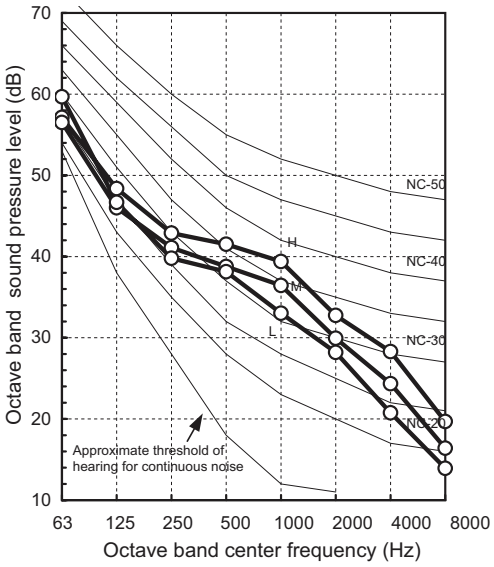

External static pressure 120Pa

FAN tap	H	M	L
Sound pressure level (dB(A))	44	42	39

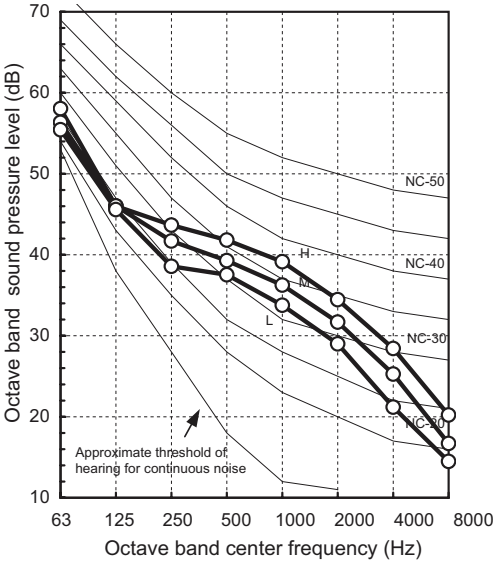

2-5. Slim Duct Type

2-5-1. Dimension

2-5-2. Wiring diagrams

2-5-3. Fan static characteristics

2-5-4. Sound characteristics (NC curve)

2-5-1. Dimension

RAV-SM564SDT-E

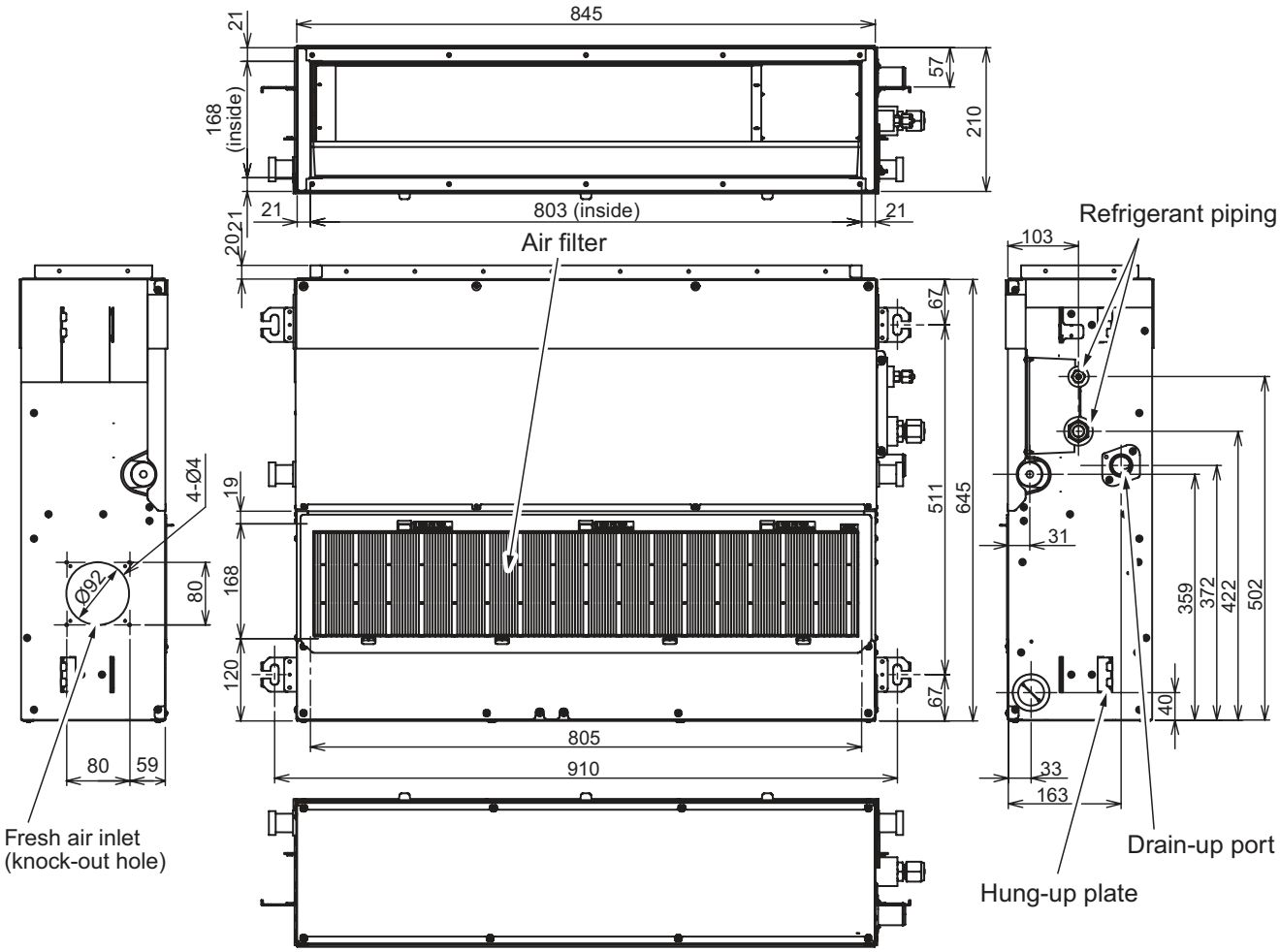

2-5-2. Wiring diagrams

RAV-SM564SDT-E

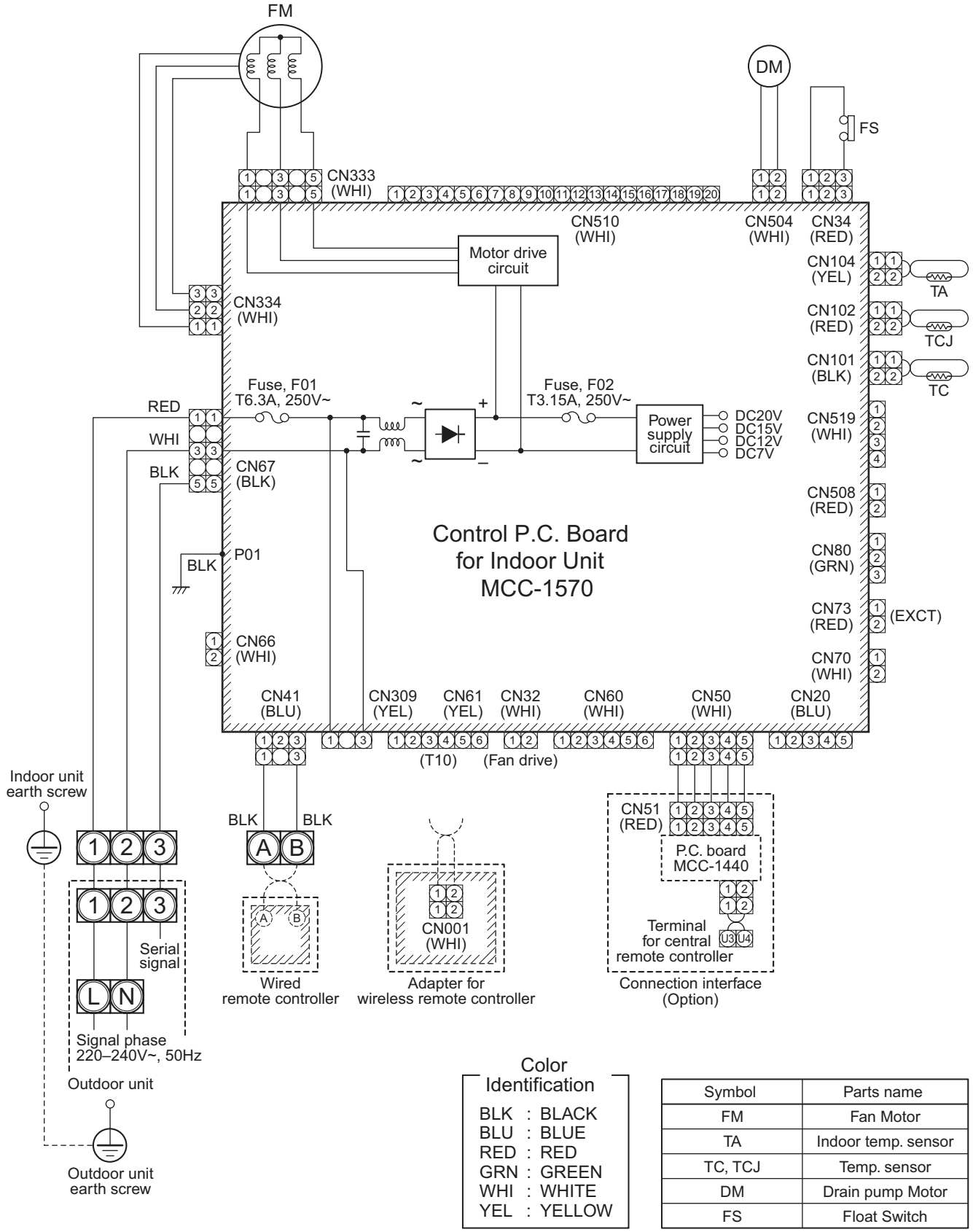

Color Identification

BLK : BLACK
BLU : BLUE
RED : RED
GRN : GREEN
WHI : WHITE
YEL : YELLOW

Symbol	Parts name
FM	Fan Motor
TA	Indoor temp. sensor
TC, TCJ	Temp. sensor
DM	Drain pump Motor
FS	Float Switch

2-5-3. Fan static characteristics

RAV-SM564SDT-E

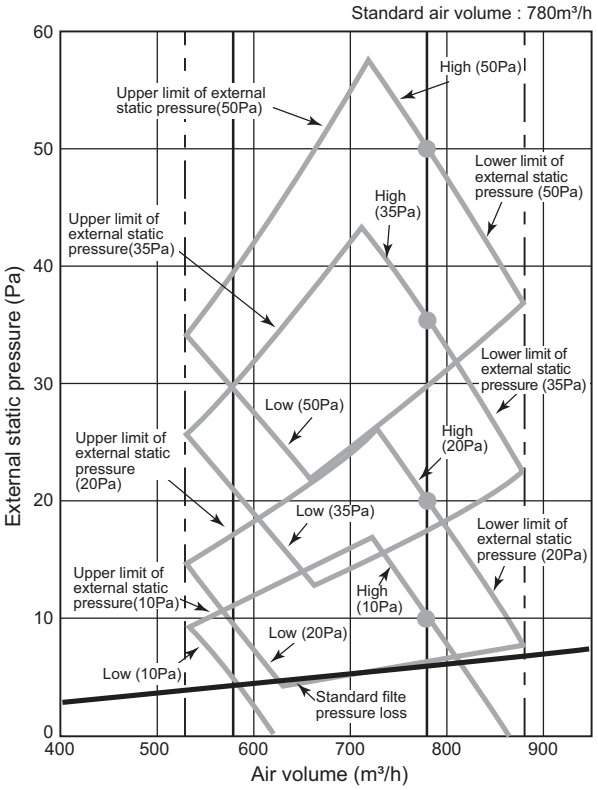

2-5-4. Sound characteristics (NC curve)

RAV-SM564SDT-E

[Measuring location]

Under air intake

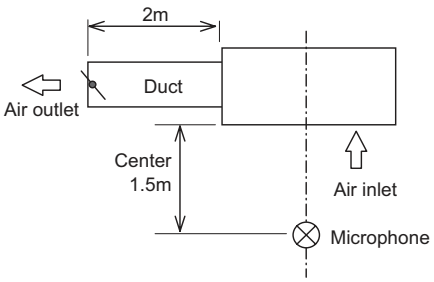

[External static pressure 10Pa]

Fan tap	H	M	L
Sound pressure level (dB(A))	45	40	36

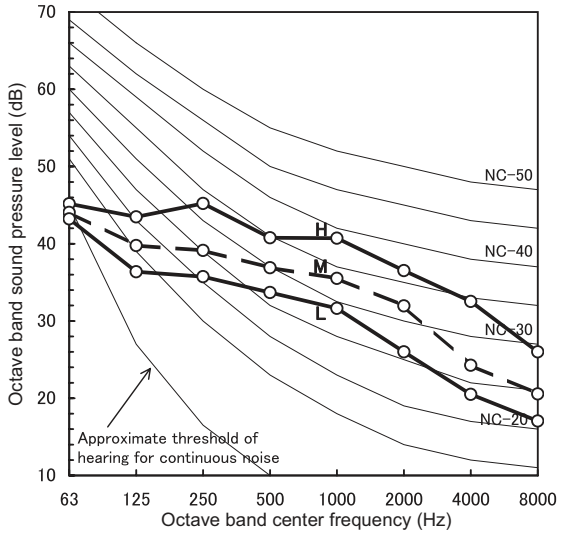

[External static pressure 20Pa]

Fan tap	H	M	L
Sound pressure level (dB(A))	46	41	37

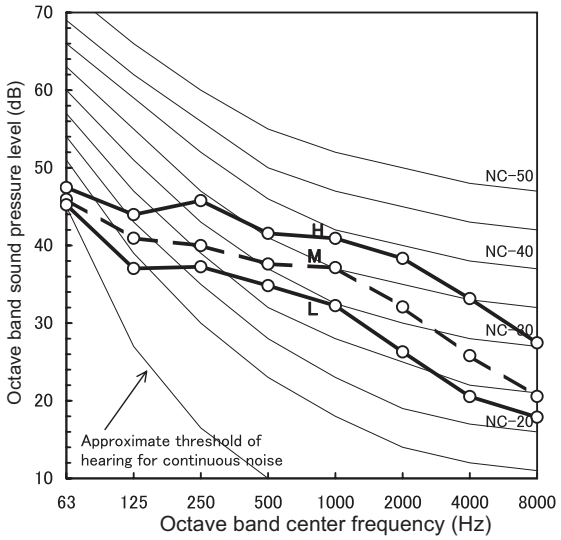

[External static pressure 35Pa]

Fan tap	H	M	L
Sound pressure level (dB(A))	47	43	39

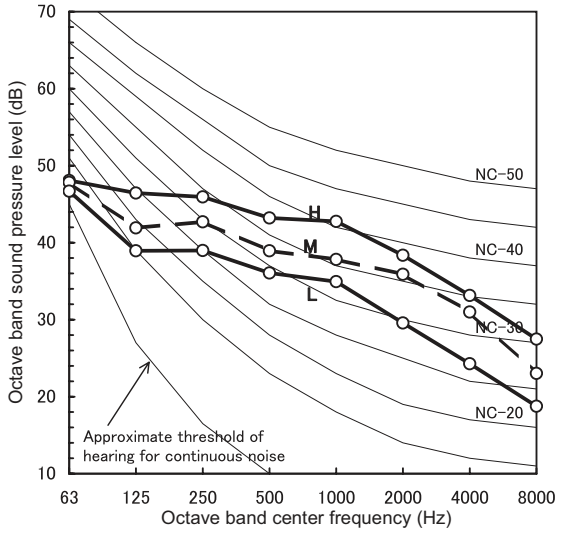

[External static pressure 50Pa]

Fan tap	H	M	L
Sound pressure level (dB(A))	48	44	41

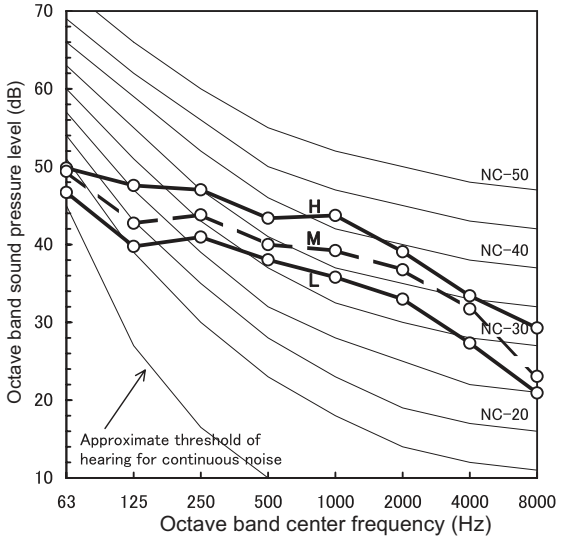

RAV-SM564SDT-E

[Measuring location]

Back air intake

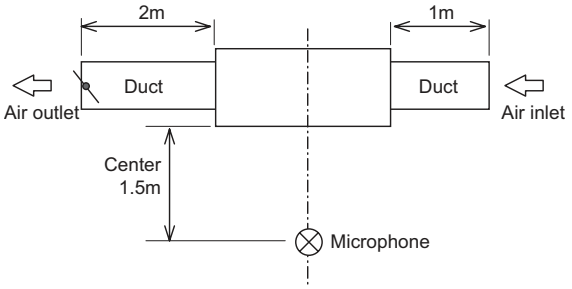

[External static pressure 10Pa]

Fan tap	H	M	L
Sound pressure level (dB(A))	33	31	28

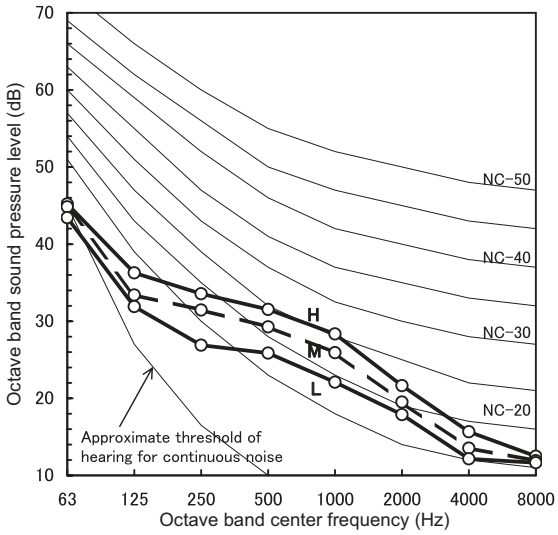

[External static pressure 20Pa]

Fan tap	H	M	L
Sound pressure level (dB(A))	34	32	29

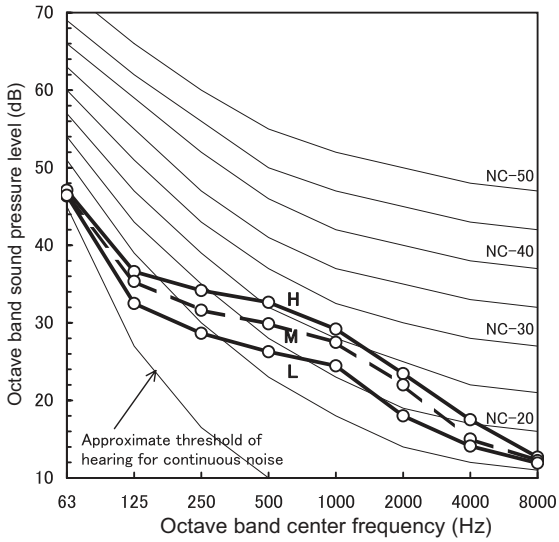

[External static pressure 35Pa]

Fan tap	H	M	L
Sound pressure level (dB(A))	35	33	30

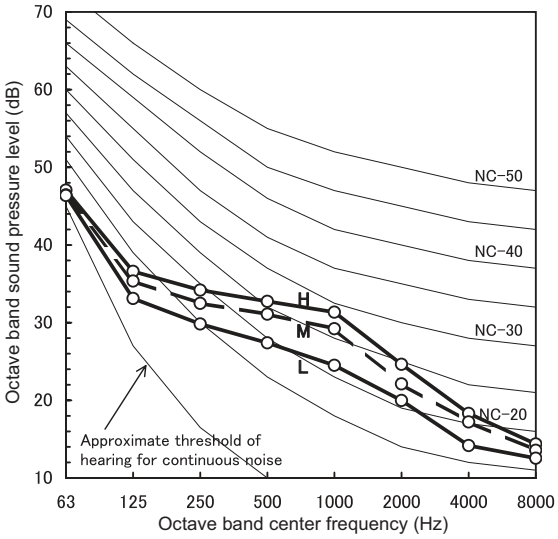

[External static pressure 50Pa]

Fan tap	H	M	L
Sound pressure level (dB(A))	36	34	32

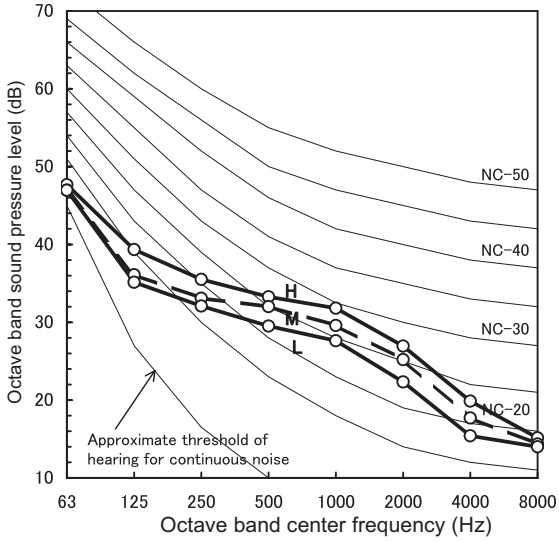

2-6. Ceiling Type

2-6-1. Dimension

2-6-2. Wiring diagrams

2-6-3. Air throw distance chart

2-6-4. Sound characteristics (NC curve)

2-6-1. Dimension

RAV-SM568CTP-E

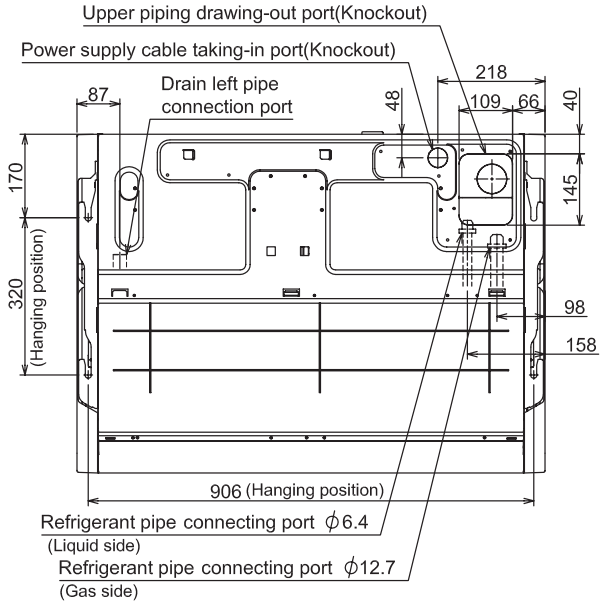

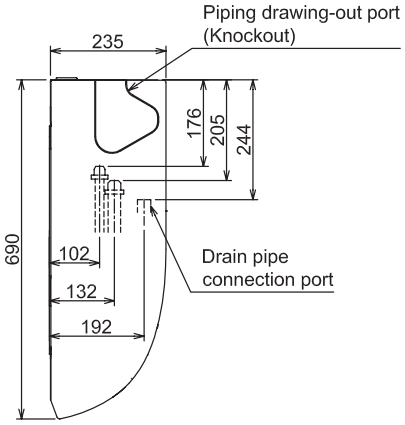

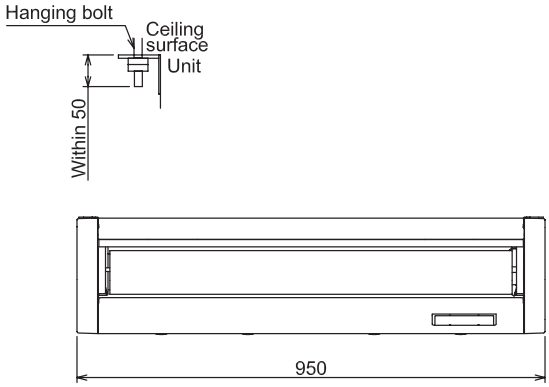

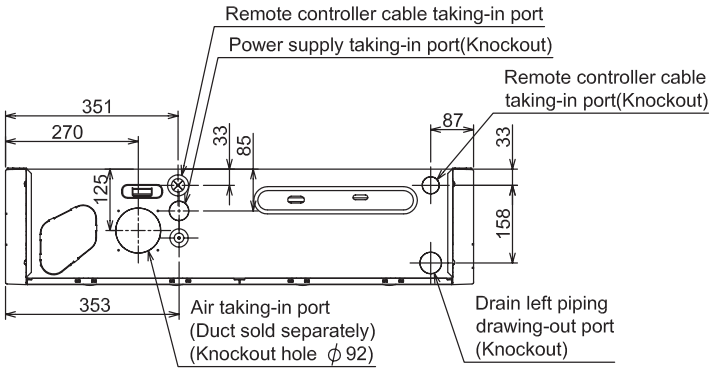

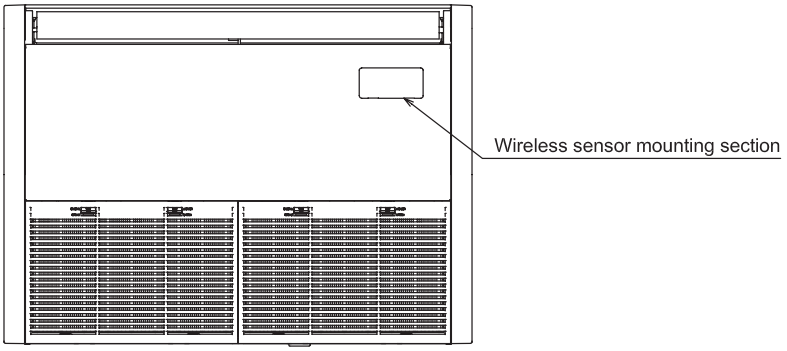

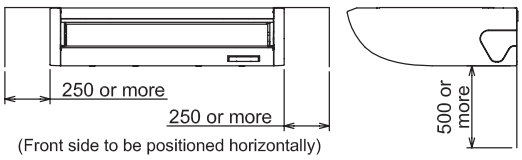

Space required for installation and servicing

RAV-SM808CTP-E

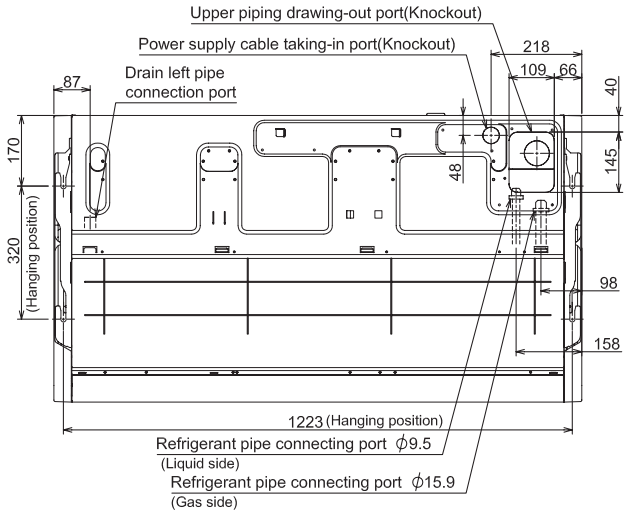

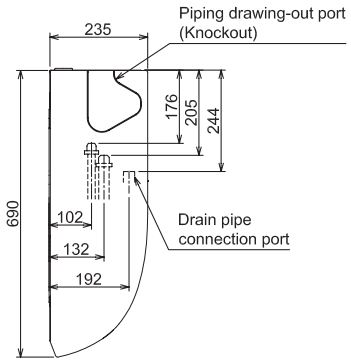

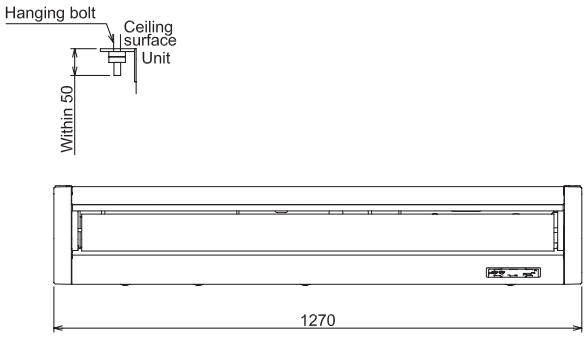

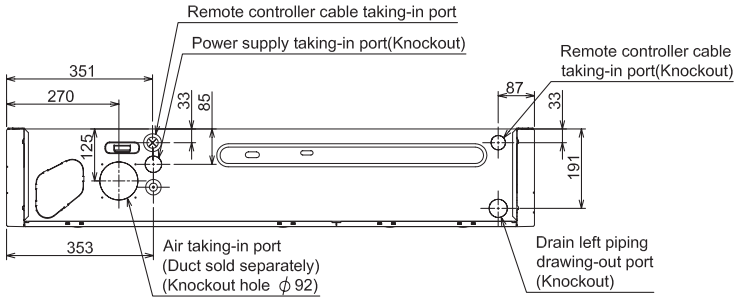

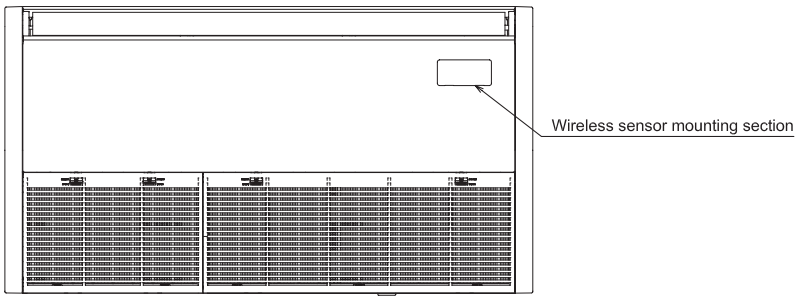

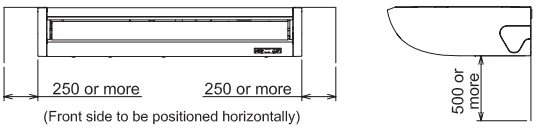

Space required for installation and servicing

RAV-SM1108CTP-E, RAV-SM1408CTP-E

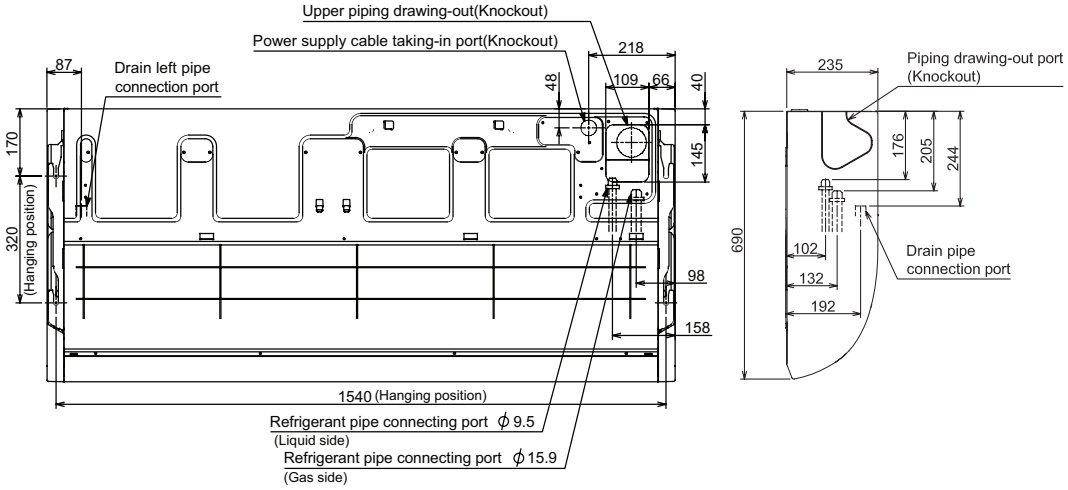

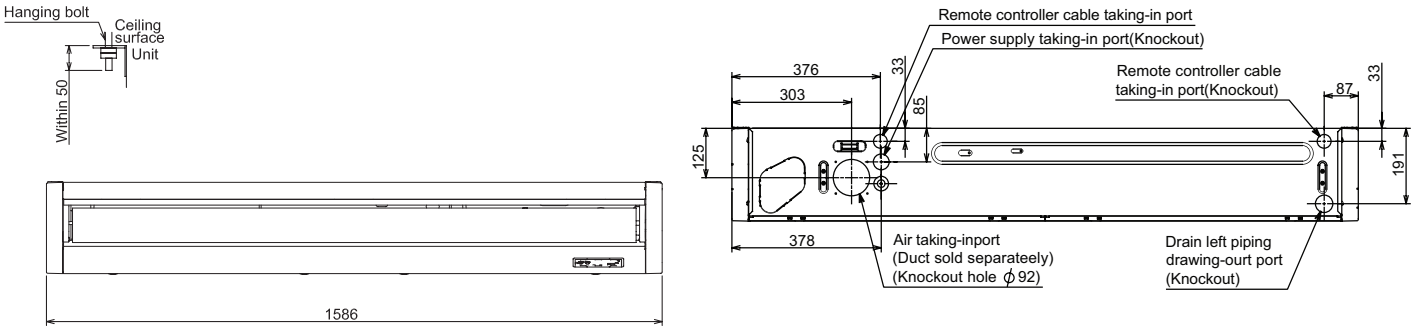

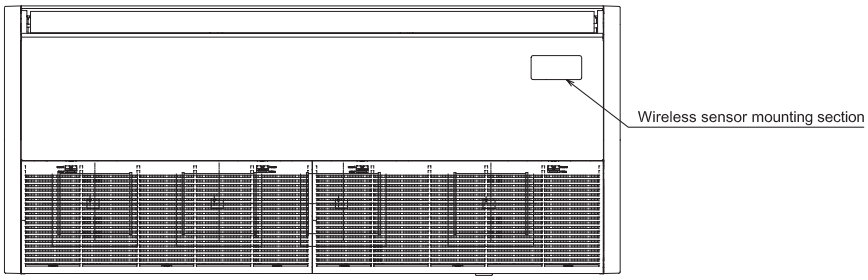

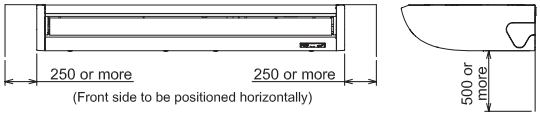

Space required for installation and servicing

2-6-2. Wiring diagrams

RAV-SM568CTP-E, RAV-SM808CTP-E, RAV-SM1108CTP-E, RAV-SM1408CTP-E

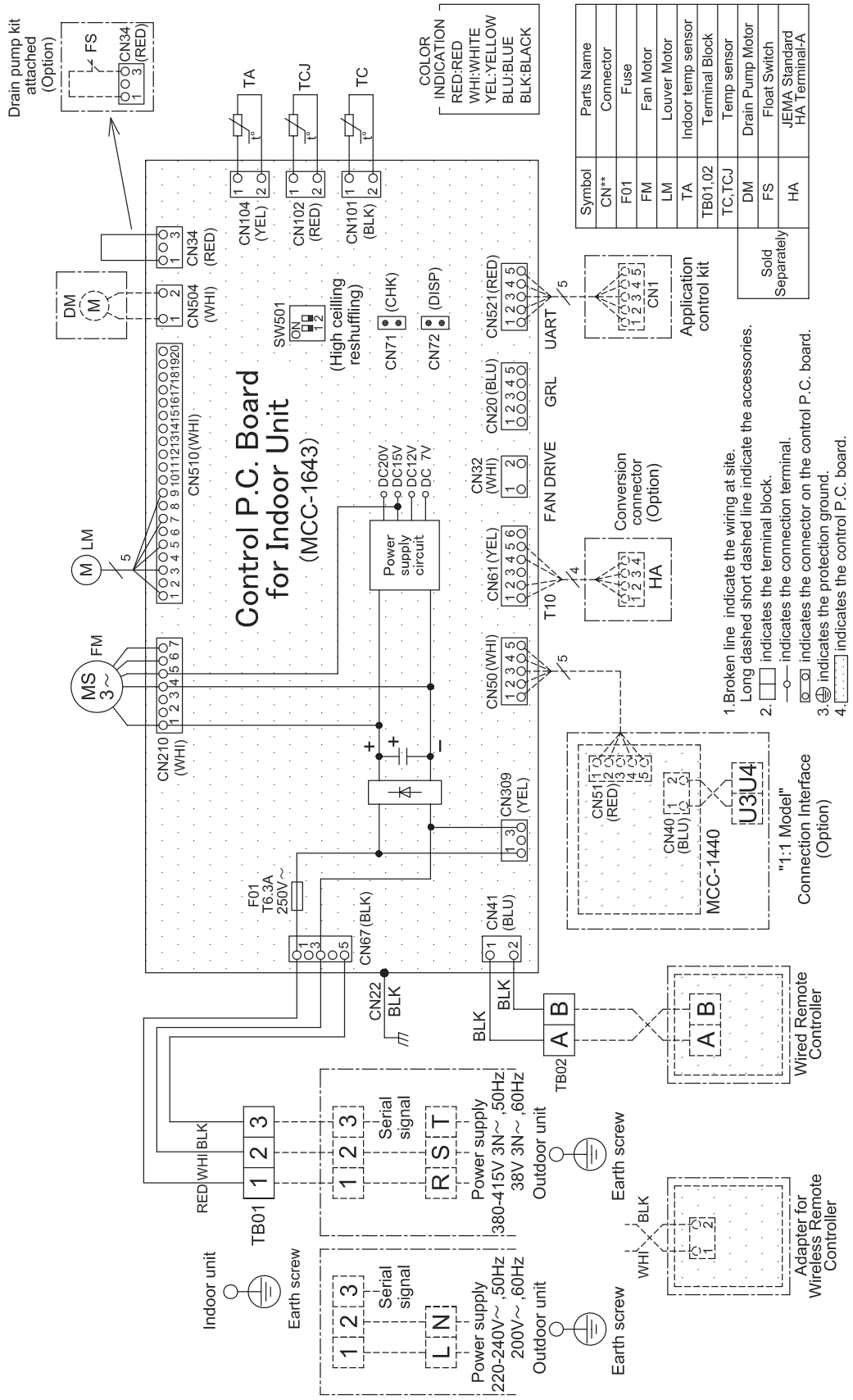

2-6-3. Air throw distance chart

RAV-SM568CTP-E

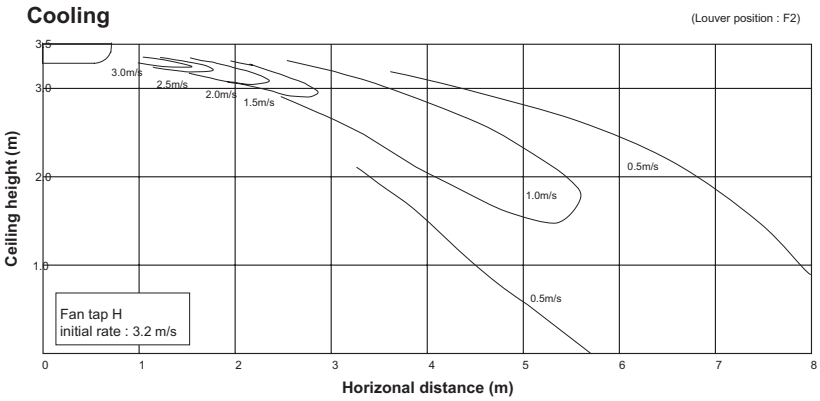

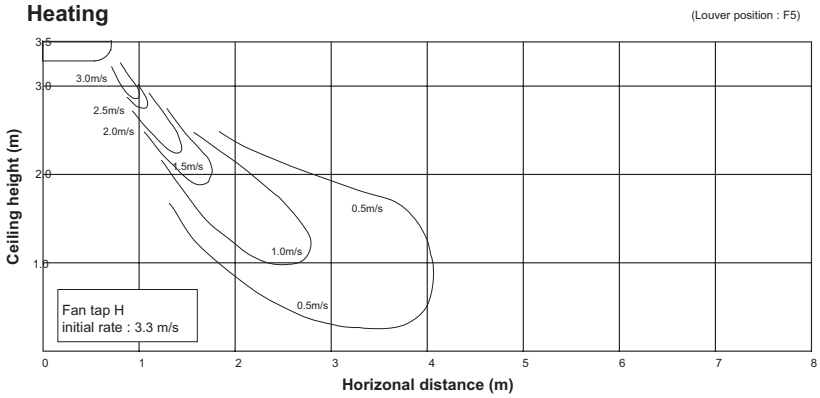

RAV-SM808CTP-E

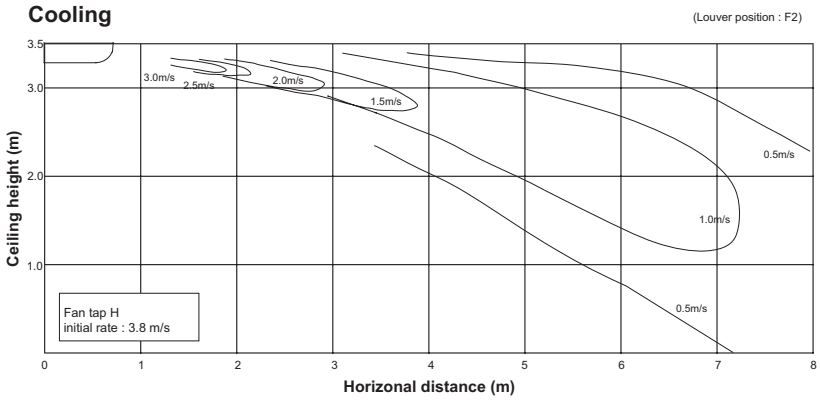

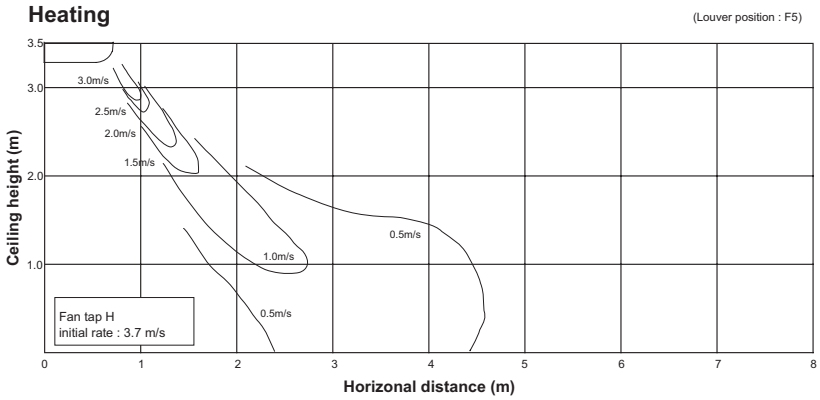

RAV-SM1108CTP-E

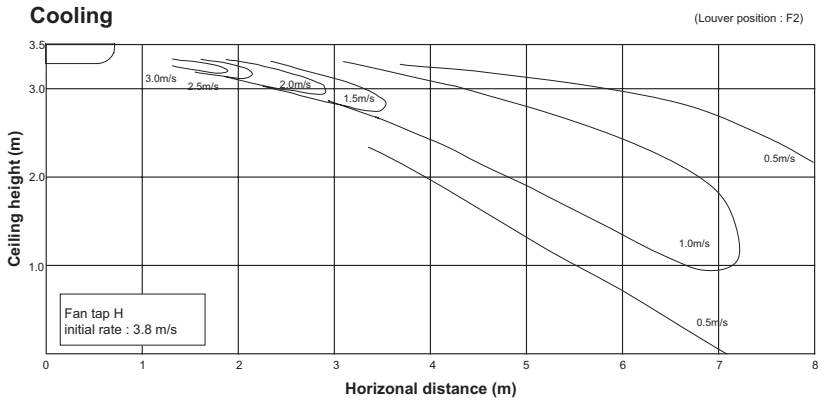

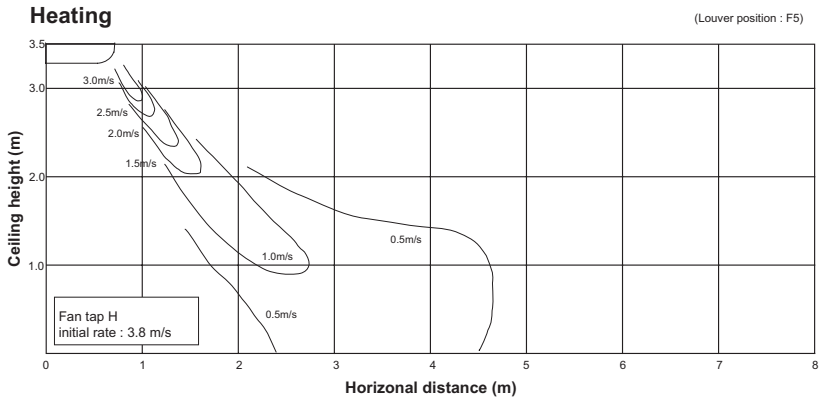

RAV-SM1408CTP-E

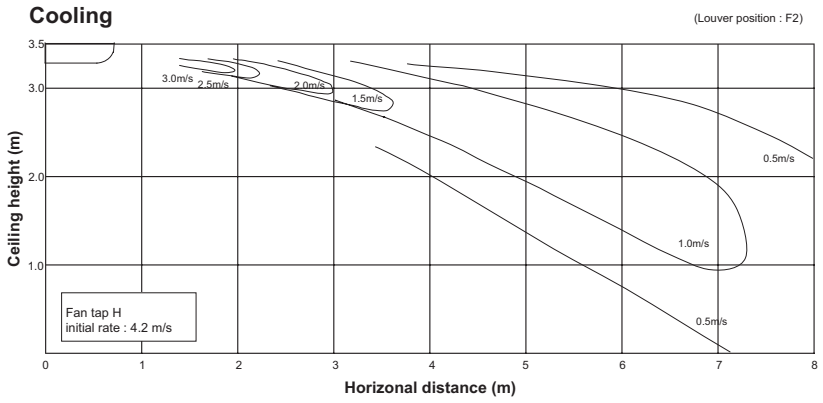

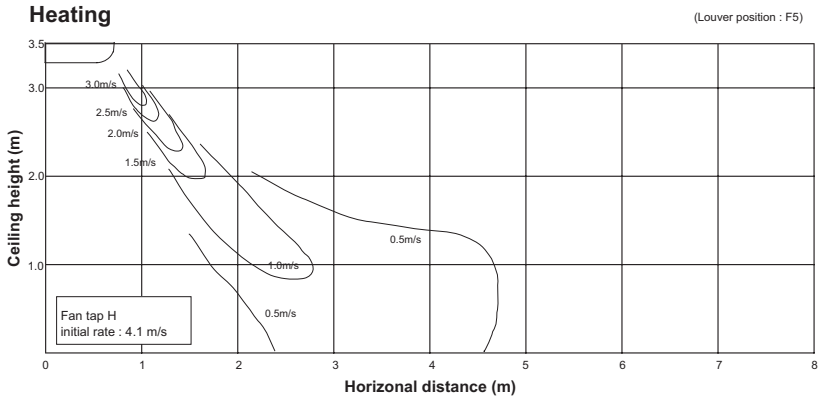

2-6-4. Sound characteristics (NC curve)

RAV-SM568CTP-E

Fan tap	H	M	L
Sound pressure level (dB(A))	37	35	28

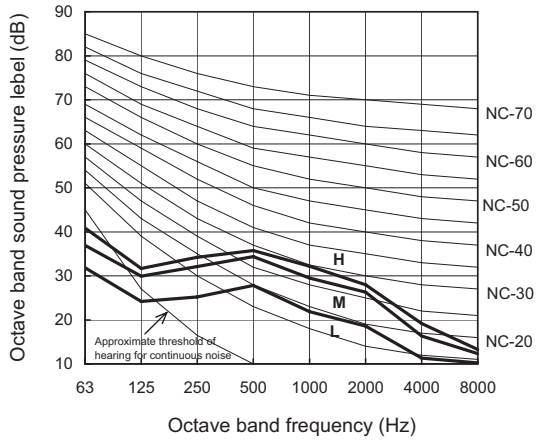

RAV-SM808CTP-E

Fan tap	H	M	L
Sound pressure level	41	36	29

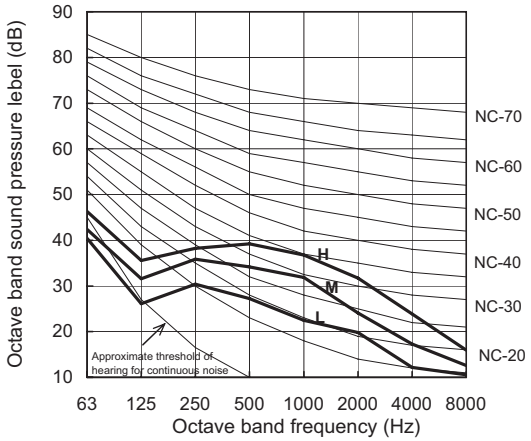

RAV-SM1108CTP-E

Fan tap	H	M	L
Sound pressure level (dB(A))	44	38	32

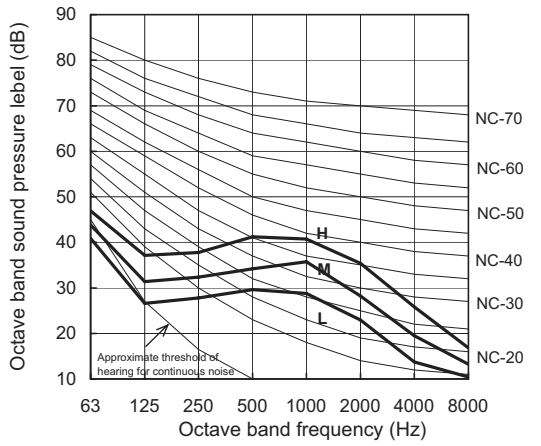

RAV-SM1408CTP-E

Fan tap	H	M	L
Sound pressure level	46	41	35

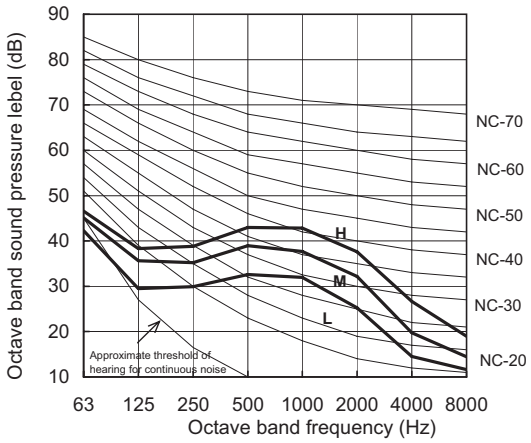

2-7. High Wall Type

2-7-1. Dimension

2-7-2. Wiring diagrams

2-7-3. Air throw distance chart

2-7-4. Sound characteristics (NC curve)

2-7-1. Dimension

RAV-SM566KRT-E

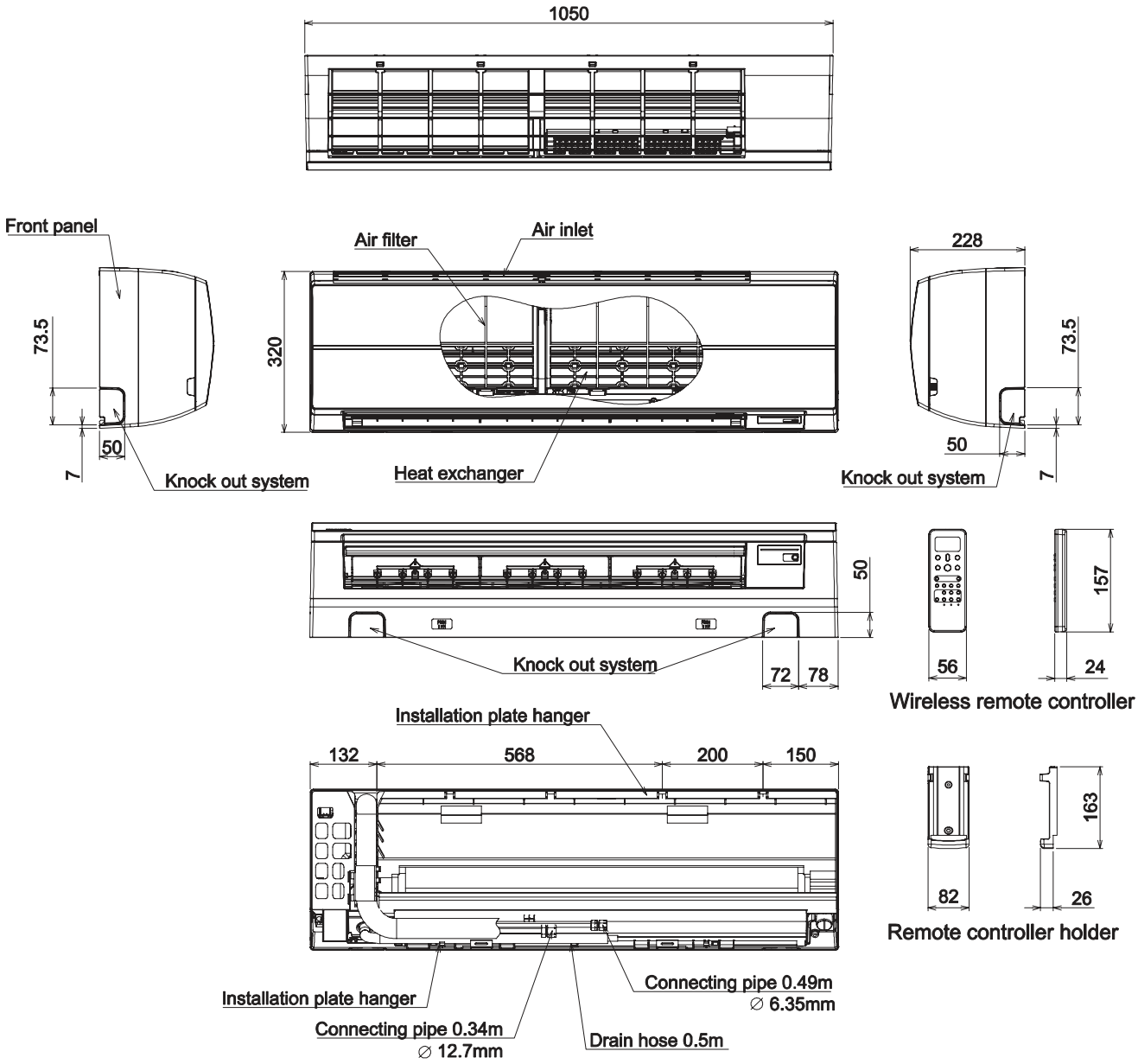

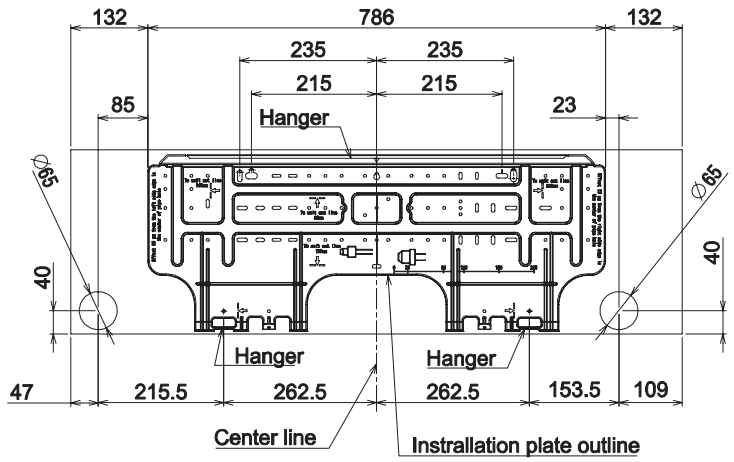

Space required for installation and servicing

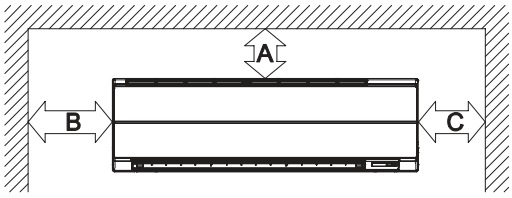

	Distance	Comments
A	50mm or more	
B	850mm or more	For exchange of cross flow fan
C	170mm or more	

Unit:mm

RAV-SM806KRT-E

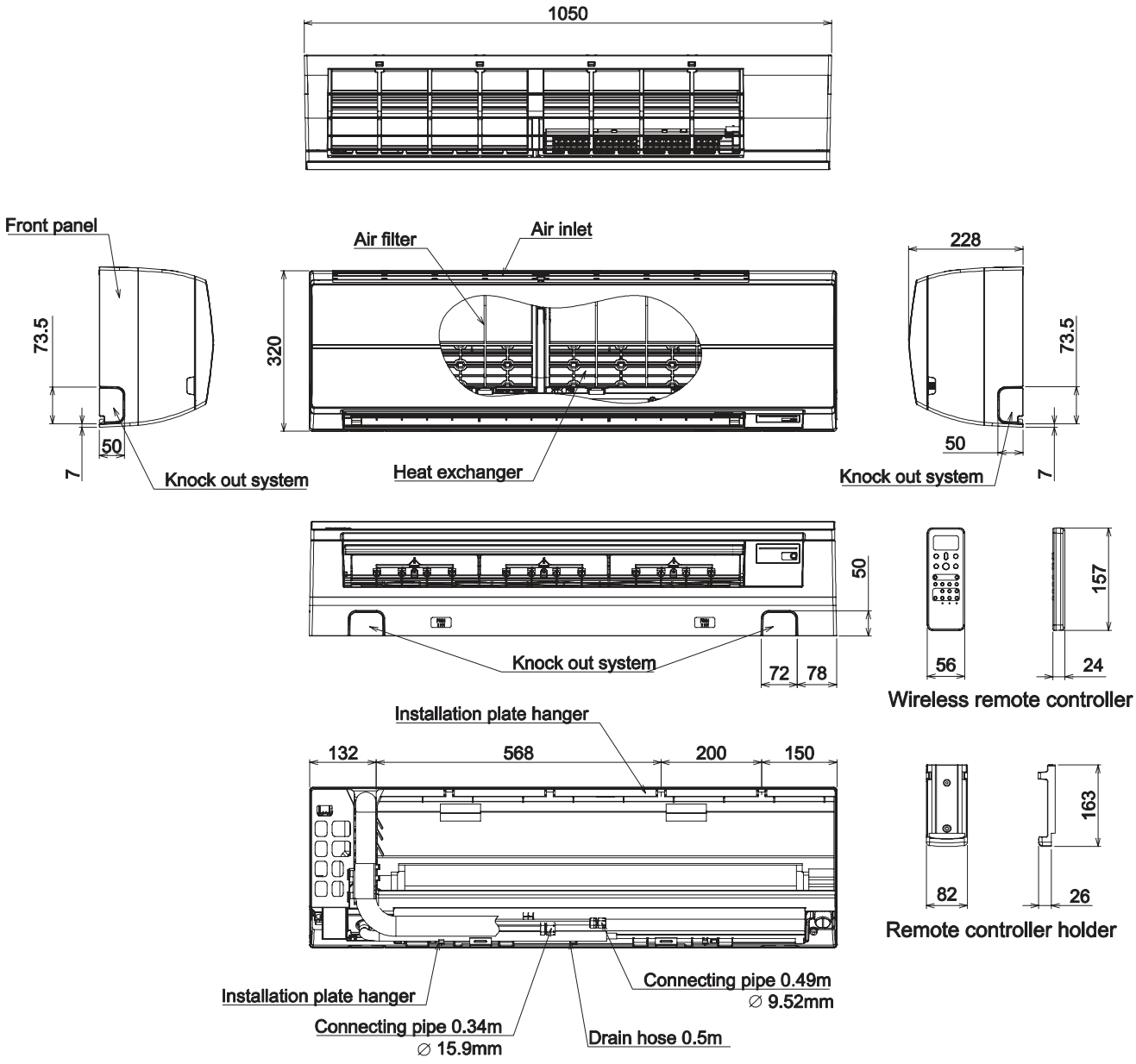

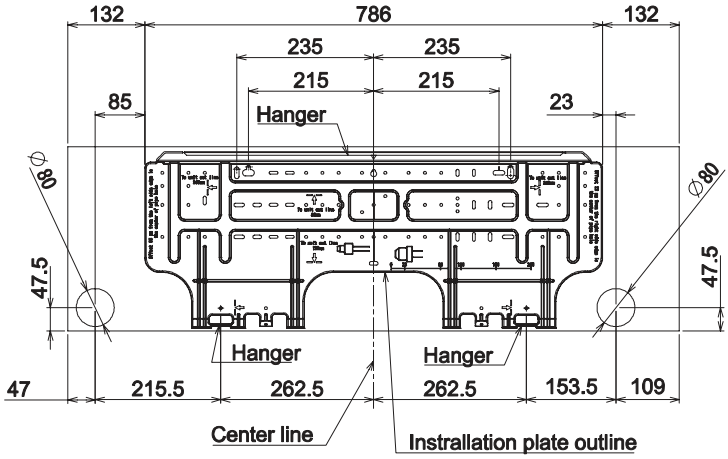

Space required for installation and servicing

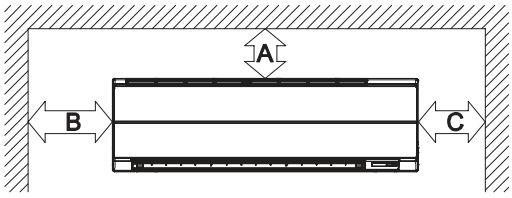

	Distance	Comments
A	50mm or more	
B	850mm or more	For exchange of cross flow fan
C	170mm or more	

Unit:mm

2-7-2. Wiring diagrams

RAV-SM566KRT-E, RAV-SM806KRT-E

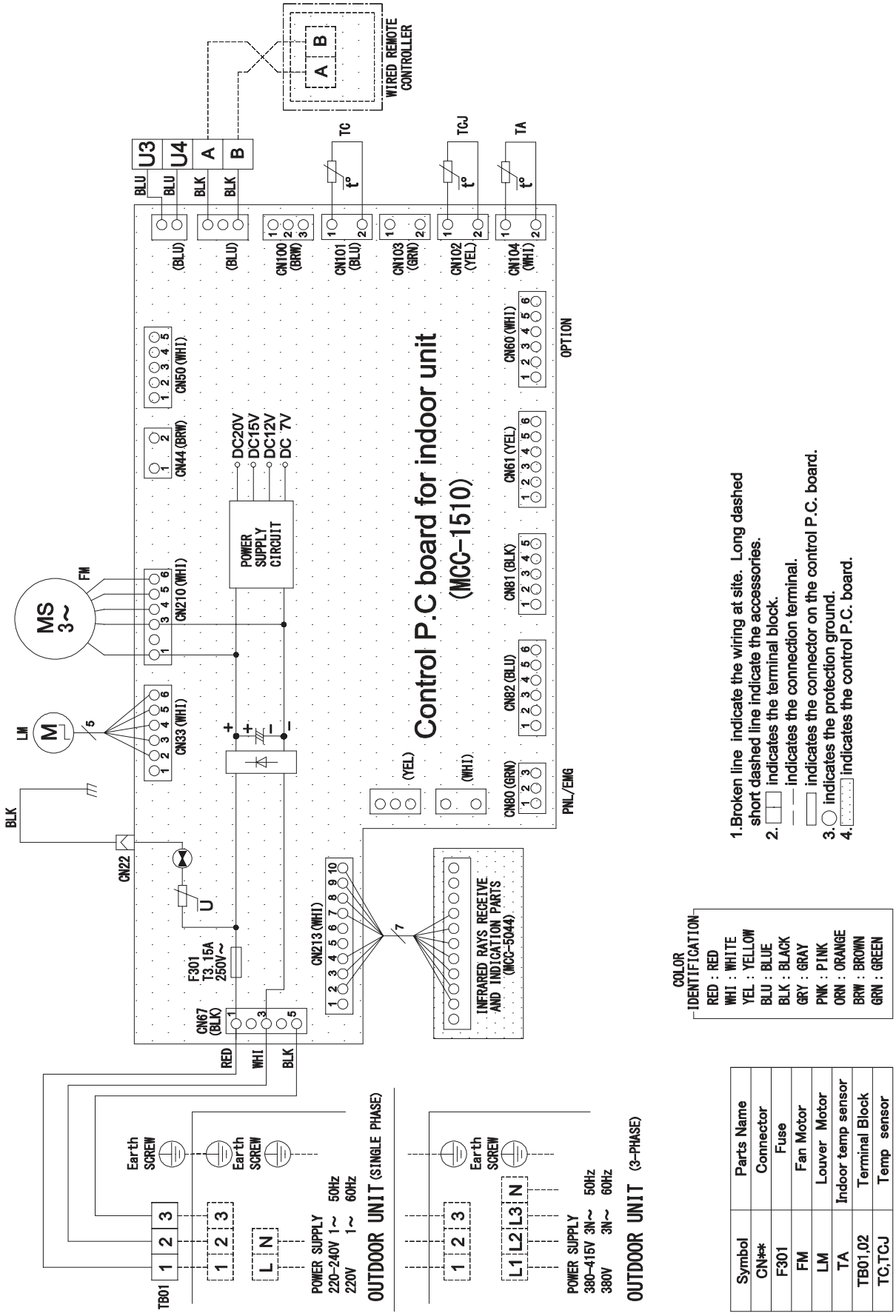

Symbol	Parts Name
CN**	Connector
F301	Fuse
FM	Fan Motor
LM	Louver Motor
TA	Indoor temp sensor
TB01,02	Terminal Block
TC,TCJ	Temp sensor

2-7-3. Air throw distance chart

RAV-SM566KRT-E

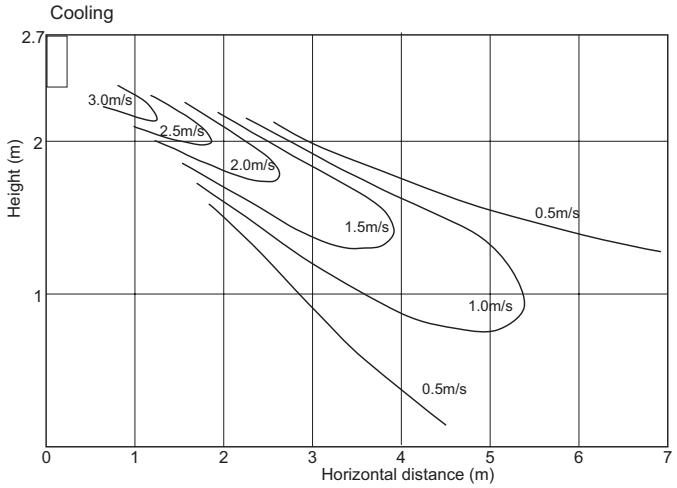

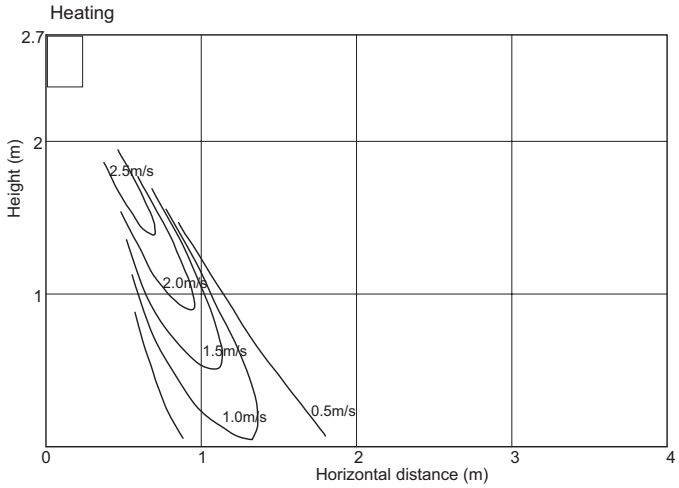

RAV-SM806KRT-E

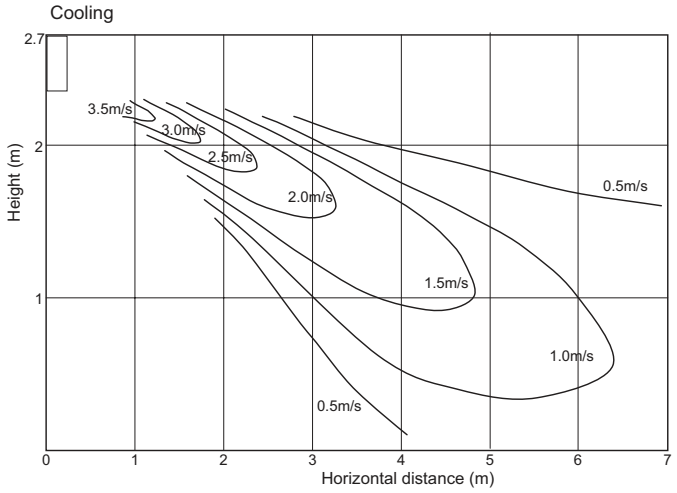

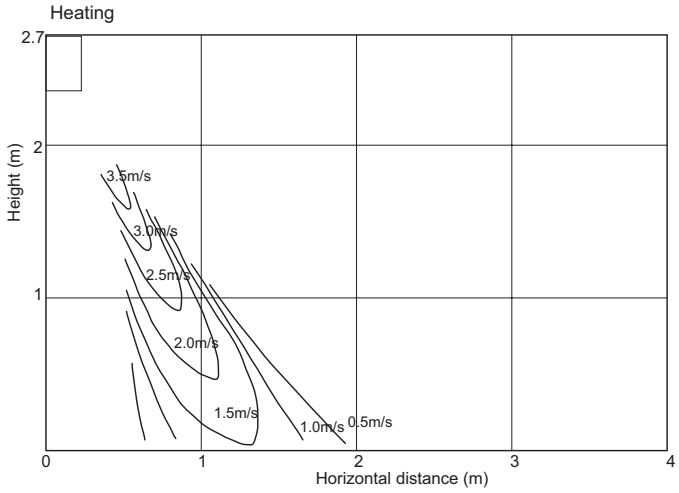

2-7-4. Sound characteristics (NC curve)

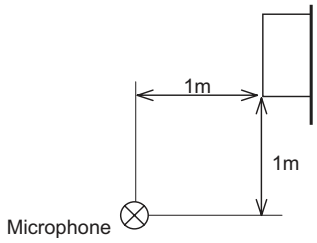

RAV-SM566KRT-E

Fan tap	H	M	L
Sound pressure level (dB(A))	42	39	36

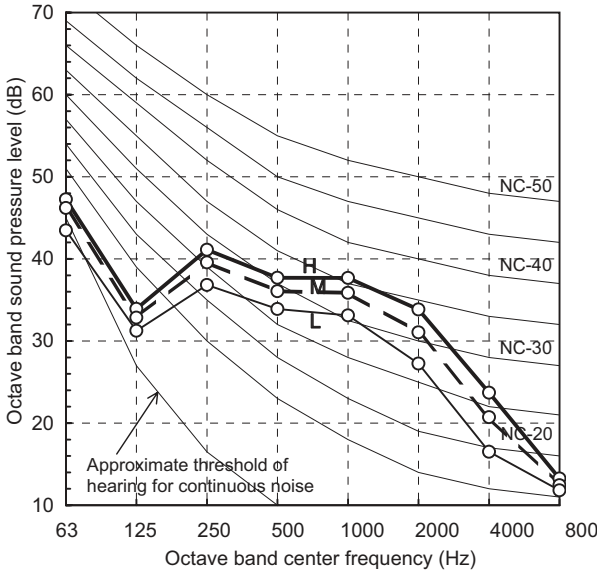

RAV-SM806KRT-E

Fan tap	H	M	L
Sound pressure level (dB(A))	47	41	36

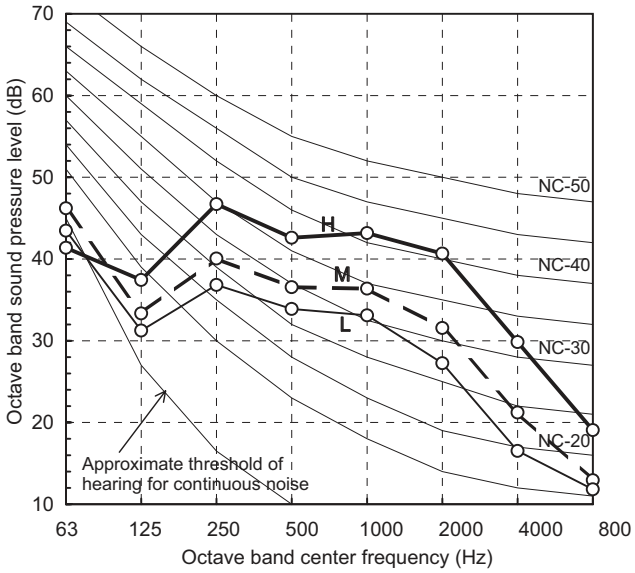

TOSHIBA CARRIER CORPORATION

Copyright © 2017 TOSHIBA CARRIER CORPORATION, ALL Rights Reserved.