TOSHIBA

E19-3B2

Model name:

MCY-MHP0806HS8-E
MCY-MHP1006HS8-E

MiNi-SMMS e

Engineering Data Book

Outdoor units

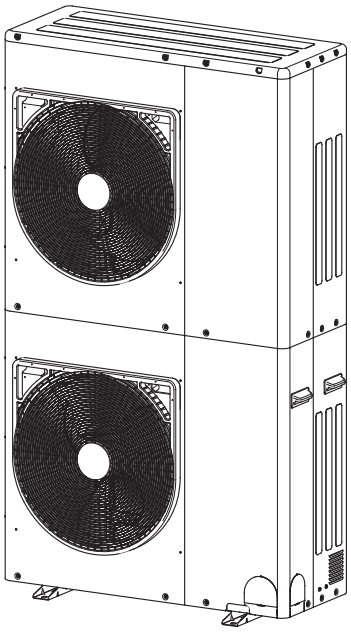

Notice: Toshiba is committed to continuously improving its products to ensure the highest quality and reliability standards, and to meet local regulations and market requirements. All features and specifications are subject to change without prior notice.

Contents

Safety caution 2
1 System overview 5
1-1. Allocation standard of model name 5
1-2. Summary of system equipments 5
2 Equipment selection procedure 12
2-1. Selection flow chart 12
2-2. Combination conditions for indoor unit and outdoor unit 13
2-3. Cooling / heating capacity characteristics 14
2-4. Operational temperature range 17
3 Refrigerant piping design 18
3-1. Free branching system 18
3-2. Allowable length / height difference of refrigerant piping 19
3-3. Selection of refrigerant piping 20
3-4. Allowable length / height difference of refrigerant piping with PMV Kit 22
3-5. Selection of refrigerant piping with PMV Kit 23
3-6. Charging requirement with additional refrigerant 25
4 Wiring design 26
4-1. General 26
4-2. Electrical wiring design 26
4-3. Outdoor unit power supply 26
4-4. Indoor unit power supply 27
4-5. Design of control wiring 33
5 Outdoor unit 35
5-1. Specifications 35
5-2. Dimensional drawing 36
5-3. Branch header / branch joint 37
5-4. Refrigerant cycle diagram 38
5-5. Wiring diagram 39
5-6. Connecting diagram 40
5-7. Optional printed circuit board (PCB) of outdoor unit 41
5-8. Part load performance 46
5-9. Sound pressure level data 48
5-10. PMV Kit 50

Safety caution

- **Before use, read carefully through the "Safety caution" section to ensure correct operation.**
- **The important contents concerned to the safety are described in the "Safety cautions". Be sure to keep them. For Indications and their meanings, see the following description.**

Warning Indications on the Air Conditioner Unit

Warning indication	Description
WARNING **ELECTRICAL SHOCK HAZARD** Disconnect all remote electric power supplies before servicing.	**WARNING** **ELECTRICAL SHOCK HAZARD** Disconnect all remote electric power supplies before servicing.
WARNING Moving parts. Do not operate unit with grille removed. Stop the unit before the servicing.	**WARNING** Moving parts. Do not operate unit with grille removed. Stop the unit before the servicing.
CAUTION High temperature parts. You might get burned when removing this panel.	**CAUTION** High temperature parts. You might get burned when removing this panel.
CAUTION Do not touch the aluminum fins of the unit. Doing so may result in injury.	**CAUTION** Do not touch the aluminium fins of the unit. Doing so may result in injury.
CAUTION **BURST HAZARD** Open the service valves before the operation, otherwise there might be the burst.	**CAUTION** **BURST HAZARD** Open the service valves before the operation, otherwise there might be the burst.
CAUTION Never recover the refrigerant into the outdoor unit.	**CAUTION** Never recover the refrigerant into the outdoor unit.
CAUTION **Do not climb onto the top side.** Doing so may result in injury.	**CAUTION** **Do not climb onto the top side.** Doing so may result in injury.

Safety caution

Explanation of indications

⚠ WARNING

Indicates possibilities that a death or serious injury of personnel is caused by an incorrect handling.

⚠ CAUTION

Indicates contents that an injury (*1) or property damage (*2) only may be caused when an incorrect work has been executed.

*1: "Injury" means a hurt, a burn, or an electric shock which does not require hospitalization or a long-term going to the hospital.
*2: "Property damage means an enlarged damage concerned to property, or breakage of materials.

- **After installation work has finished, check there is no trouble by a test operation, and explain using method and maintenance method to the customers based on the Owner's Manual.**
  Please ask the customers to keep this Installation Manual together with the Owner's Manual.

⚠ WARNING

Ask a shop or a professional dealer to install the air conditioner.
If you will install by yourself, a fire, an electric shock, or water leak is caused.

Take measures so that the refrigerant does not exceed the limit concentration even if it leaks when installing the air conditioner in a small room.
For the measures not to exceed the limit of concentration, contact the dealer. If the refrigerant leaks and it exceeds the limit of concentration, an accident of oxygen shortage is caused.

Install the air conditioner at a place which is satisfactorily bearable to weight.
If strength is insufficient, the unit may fall down resulting in human injury.

Perform a specified installation work against a strong wind such as typhoon or earthquake.
If the air conditioner is imperfectly installed, an accident by falling or dropping may be caused.

If refrigerant gas leaks during installation work, ventilate the room.
If the leaked refrigerant gas approaches to fire, noxious gas may generate.

After installation work, confirm that refrigerant gas does not leak.
If refrigerant gas leaks in the room, and approaches to fire such as fan heater, stove or kitchen range, generation of noxious gas may be caused.

Never recover refrigerant in the outdoor unit.
Be sure to use a refrigerant recovery device to recover refrigerant in reinstallation or repair work.
Recovery of refrigerant in the outdoor unit is unavailable; otherwise a serious accident such as crack or human injury is caused.

A person qualified for the electric work should deal with the electric construction conforming to the regulations of the local electric company and the Installation Manual. Be sure to use the exclusive circuit.
If there is capacity shortage of the power supply circuit or incomplete installation, a fire or an electric shock is caused.

For cabling, use the specified cables and connect them securely so that external force of cable does not transmit to the terminal connecting section.
If connection or fixing is incomplete, a fire, etc. may be caused.

Be sure to connect earth wire.
Do not connect earth wire to gas pipe, water pipe, lightning rod, nor earth wire of telephone.
If grounding is incomplete, an electric shock is caused.

⚠ CAUTION

Do not install the air conditioner at a place where combustible gas may leak.
If gas leaks and is collected at surrounding the unit, the production of fire may be caused.

Be sure to attach an earth leakage breaker; otherwise an electric shock may be caused.

Using a torque wrench, tighten the flare nut in the specified method.
If the flare nut is exceedingly tightened, the flare nut is broken and a refrigerant leakage may be caused after a long time has passed.

WARNINGS ON REFRIGERANT LEAKAGE

Check of Concentration Limit

The room in which the air conditioner is to be installed requires a design that in the event of refrigerant gas leaking out, its concentration will not exceed a set limit.

The refrigerant R410A which is used in the air conditioner is safe, without the toxicity or combustibility of ammonia, and is not restricted by laws to be imposed which protect the ozone layer. However, since it contains more than air, it poses the risk of suffocation if its concentration should rise excessively.

Suffocation from leakage of R410A is almost nonexistent. With the recent increase in the number of high concentration buildings, however, the installation of multi air conditioner systems is on the increase because of the need for effective use of floor space, individual control, energy conservation by curtailing heat and carrying power etc.

Most importantly, the multi air conditioner system is able to replenish a large amount of refrigerant compared with conventional individual air conditioners. If a single unit of the multi conditioner system is to be installed in a small room, select a suitable model and installation procedure so that if the refrigerant accidentally leaks out, its concentration does not reach the limit (and in the event of an emergency, measures can be made before injury can occur).

In a room where the concentration may exceed the limit, create an opening with adjacent rooms, or install mechanical ventilation combined with a gas leak detection device.

The concentration is as given below.

$$\frac{\text{Total amount of refrigerant (kg)}}{\text{Min. volume of the indoor unit installed room (m}^3\text{)}} \leq \text{Concentration limit (kg/m}^3\text{)}$$

Concentration limit

Compliance to the local applicable regulations and standards for the concentration limit is required.

NOTE 1:

If there are 2 or more refrigerating systems in a single refrigerating device, the amounts of refrigerant should be as charged in each independent device.

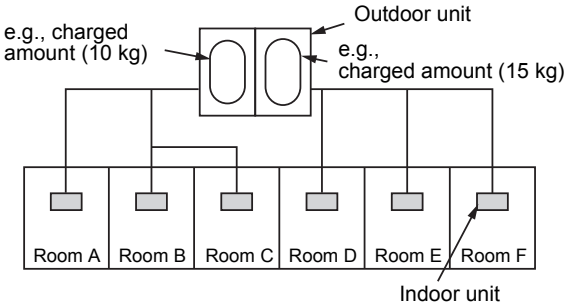

For the amount of charge in this example:

The possible amount of leaked refrigerant gas in rooms A, B and C is 10 kg.

The possible amount of leaked refrigerant gas in rooms D, E and F is 15 kg.

Important

NOTE 2:

The standards for minimum room volume are as follows.

(1) No partition (shaded portion)

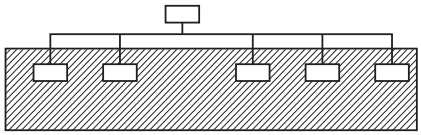

(2) When there is an effective opening with the adjacent room for ventilation of leaking refrigerant gas (opening without a door, or an opening 0.15 % or larger than the respective floor spaces at the top or bottom of the door).

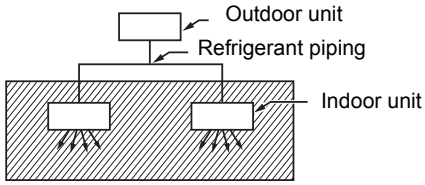

(3) If an indoor unit is installed in each partitioned room and the refrigerant tubing is interconnected, the smallest room of course becomes the object. But when a mechanical ventilation is installed interlocked with a gas leakage detector in the smallest room where the density limit is exceeded, the volume of the next smallest room becomes the object.

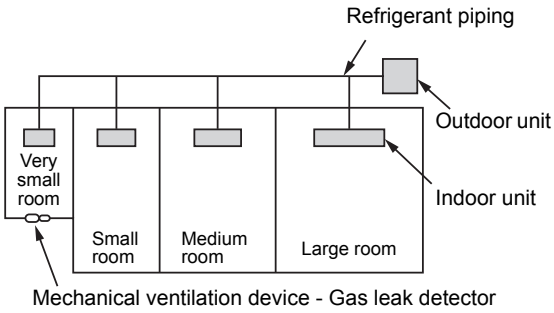

1-1. Allocation standard of model name

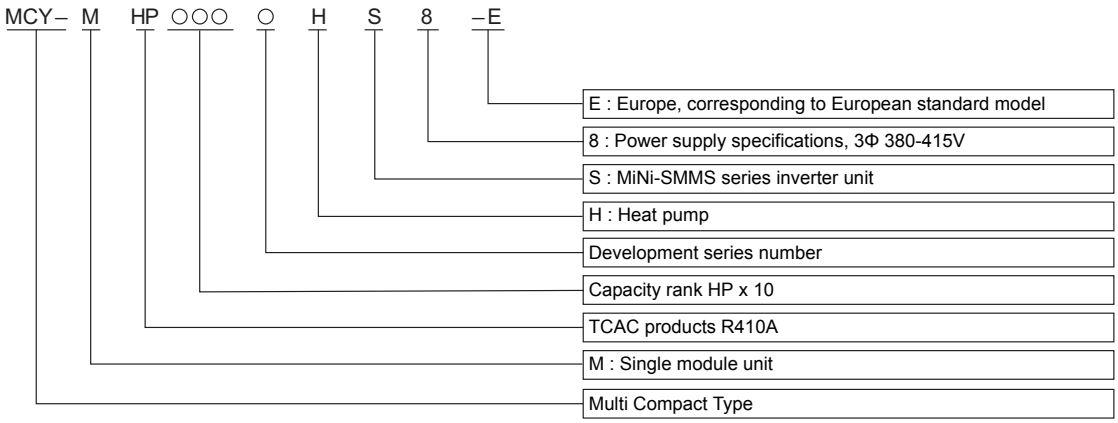

1-2. Summary of system equipments

1-2-1. Outdoor units

Corresponding HP	Inverter unit	
	8HP	10HP
Model name	MCY-MHP0806HS8-E	MCY-MHP1006HS8-E
Cooling capacity (kW)*1	22.4	28.0
Heating capacity (kW)*1	22.4	28.0
No. of connectable indoor units	12	16*2

*1 Rated conditions
Cooling : Indoor air temperature 27 °C DB / 19 °C WB. Outdoor air temperature 35 °C DB.
Heating : Indoor air temperature 20 °C DB. Outdoor air temperature 7 °C DB / 6 °C WB.
*2 When the No. of connecting indoor units exceeds 12, maximum total capacity code of indoor units will be 11.0HP.

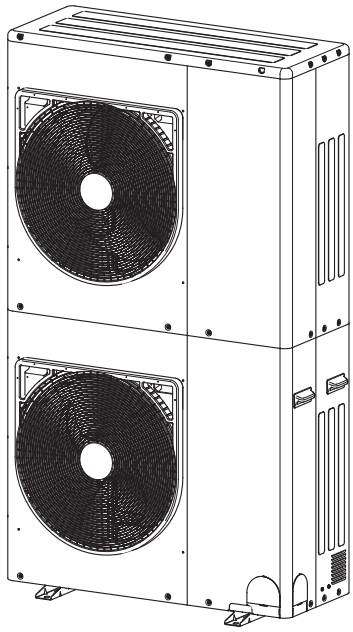

1-2-2. Indoor units

Type	Appearance	Model name	Capacity rank	Capacity code	Cooling capacity(kW)	Heating capacity(kW)	PMV Kit
4-Way Air Discharge Cassette Type		MMU-AP0094HP1-E	009type	1.00	2.8	3.2	-
		MMU-AP0124HP1-E	012type	1.25	3.6	4.0	-
		MMU-AP0154HP1-E	015type	1.70	4.5	5.0	-
		MMU-AP0184HP1-E	018type	2.00	5.6	6.3	-
		MMU-AP0244HP1-E	024type	2.50	7.1	8.0	-
		MMU-AP0274HP1-E	027type	3.00	8.0	9.0	-
		MMU-AP0304HP1-E	030type	3.20	9.0	10.0	-
		MMU-AP0364HP1-E	036type	4.00	11.2	12.5	-
		MMU-AP0484HP1-E	048type	5.00	14.0	16.0	-
		MMU-AP0564HP1-E	056type	6.00	16.0	18.0	-
		MMU-UP0091HP-E	009type	1.00	2.8	3.2	-
		MMU-UP0121HP-E	012type	1.25	3.6	4.0	-
		MMU-UP0151HP-E	015type	1.70	4.5	5.0	-
		MMU-UP0181HP-E	018type	2.00	5.6	6.3	-
		MMU-UP0241HP-E	024type	2.50	7.1	8.0	-
		MMU-UP0271HP-E	027type	3.00	8.0	9.0	-
		MMU-UP0301HP-E	030type	3.20	9.0	10.0	-
		MMU-UP0361HP-E	036type	4.00	11.2	12.5	-
		MMU-UP0481HP-E	048type	5.00	14.0	16.0	-
		MMU-UP0561HP-E	056type	6.00	16.0	18.0	-
Compact 4-way Cassette type		MMU-AP0057MH-E	005type	0.60	1.7	1.9	Available
		MMU-AP0077MH-E	007type	0.80	2.2	2.5	Available
		MMU-AP0097MH-E	009type	1.00	2.8	3.2	Available
		MMU-AP0127MH-E	012type	1.25	3.6	4.0	Available
		MMU-AP0157MH-E	015type	1.70	4.5	5.0	Available
		MMU-AP0187MH-E	018type	2.00	5.6	6.3	Available
		MMU-UP0051MH-E	005type	0.60	1.7	1.9	Available
		MMU-UP0071MH-E	007type	0.80	2.2	2.5	Available
		MMU-UP0091MH-E	009type	1.00	2.8	3.2	Available
		MMU-UP0121MH-E	012type	1.25	3.6	4.0	Available
		MMU-UP0151MH-E	015type	1.70	4.5	5.0	Available
		MMU-UP0181MH-E	018type	2.00	5.6	6.3	Available
2-Way Air Discharge Cassette Type		MMU-AP0072WH1	007type	0.80	2.2	2.5	-
		MMU-AP0092WH1	009type	1.00	2.8	3.2	-
		MMU-AP0122WH1	012type	1.25	3.6	4.0	-
		MMU-AP0152WH1	015type	1.70	4.5	5.0	-
		MMU-AP0182WH1	018type	2.00	5.6	6.3	-
		MMU-AP0242WH1	024type	2.50	7.1	8.0	-
		MMU-AP0272WH1	027type	3.00	8.0	9.0	-
		MMU-AP0302WH1	030type	3.20	9.0	10.0	-
		MMU-AP0362WH1	036type	4.00	11.2	12.5	-
		MMU-AP0482WH1	048type	5.00	14.0	16.0	-
		MMU-AP0562WH1	056type	6.00	16.0	18.0	-
		MMU-UP0071WH-E	007type	0.80	2.2	2.5	-
		MMU-UP0091WH-E	009type	1.00	2.8	3.2	-
		MMU-UP0121WH-E	012type	1.25	3.6	4.0	-
		MMU-UP0151WH-E	015type	1.70	4.5	5.0	-
		MMU-UP0181WH-E	018type	2.00	5.6	6.3	-
		MMU-UP0241WH-E	024type	2.50	7.1	8.0	-
		MMU-UP0271WH-E	027type	3.00	8.0	9.0	-
		MMU-UP0301WH-E	030type	3.20	9.0	10.0	-
		MMU-UP0361WH-E	036type	4.00	11.2	12.5	-
		MMU-UP0481WH-E	048type	5.00	14.0	16.0	-
		MMU-UP0561WH-E	056type	6.00	16.0	18.0	-

Type	Appearance	Model name	Capacity rank	Capacity code	Cooling capacity(kW)	Heating capacity(kW)	PMV Kit
1-Way Air Discharge Cassette Type		**MMU-AP0074YH1-E**	007type	0.80	2.2	2.5	Available
		MMU-AP0094YH1-E	009type	1.00	2.8	3.2	Available
		MMU-AP0124YH1-E	012type	1.25	3.6	4.0	Available
		MMU-AP0154SH1-E	015type	1.70	4.5	5.0	Available
		MMU-AP0184SH1-E	018type	2.00	5.6	6.3	Available
		MMU-AP0244SH1-E	024type	2.50	7.1	8.0	Available
		MMU-UP0051YHP-E	005type	0.60	1.7	1.9	Available
		MMU-UP0071YHP-E	007type	0.80	2.2	2.5	Available
		MMU-UP0091YHP-E	009type	1.00	2.8	3.2	Available
		MMU-UP0121YHP-E	012type	1.25	3.6	4.0	Available
		MMU-UP0151SH-E	015type	1.70	4.5	5.0	Available
		MMU-UP0181SH-E	018type	2.00	5.6	6.3	Available
		MMU-UP0241SH-E	024type	2.50	7.1	8.0	Available
Concealed Duct Type		**MMD-AP0076BHP1-E**	007type	0.80	2.2	2.5	-
		MMD-AP0096BHP1-E	009type	1.00	2.8	3.2	-
		MMD-AP0126BHP1-E	012type	1.25	3.6	4.0	-
		MMD-AP0156BHP1-E	015type	1.70	4.5	5.0	-
		MMD-AP0186BHP1-E	018type	2.00	5.6	6.3	-
		MMD-AP0246BHP1-E	024type	2.50	7.1	8.0	-
		MMD-AP0276BHP1-E	027type	3.00	8.0	9.0	-
		MMD-AP0306BHP1-E	030type	3.20	9.0	10.0	-
		MMD-AP0366BHP1-E	036type	4.00	11.2	12.5	-
		MMD-AP0486BHP1-E	048type	5.00	14.0	16.0	-
		MMD-AP0566BHP1-E	056type	6.00	16.0	18.0	-
		MMD-UP0071BHP-E	007type	0.80	2.2	2.5	-
		MMD-UP0091BHP-E	009type	1.00	2.8	3.2	-
		MMD-UP0121BHP-E	012type	1.25	3.6	4.0	-
		MMD-UP0151BHP-E	015type	1.70	4.5	5.0	-
		MMD-UP0181BHP-E	018type	2.00	5.6	6.3	-
		MMD-UP0241BHP-E	024type	2.50	7.1	8.0	-
		MMD-UP0271BHP-E	027type	3.00	8.0	9.0	-
		MMD-UP0301BHP-E	030type	3.20	9.0	10.0	-
		MMD-UP0361BHP-E	036type	4.00	11.2	12.5	-
		MMD-UP0481BHP-E	048type	5.00	14.0	16.0	-
		MMD-UP0561BHP-E	056type	6.00	16.0	18.0	-
Slim Duct Type		**MMD-AP0056SPH1-E**	005type	0.60	1.7	1.9	Available
		MMD-AP0074SPH1-E	007type	0.80	2.2	2.5	Available
		MMD-AP0094SPH1-E	009type	1.00	2.8	3.2	Available
		MMD-AP0124SPH1-E	012type	1.25	3.6	4.0	Available
		MMD-AP0154SPH1-E	015type	1.70	4.5	5.0	Available
		MMD-AP0184SPH1-E	018type	2.00	5.6	6.3	Available
		MMD-AP0244SPH1-E	024type	2.50	7.1	8.0	Available
		MMD-AP0274SPH1-E	027type	3.00	8.0	9.0	Available
Compact Slim Duct Type		**MMD-UP0051SPHY-E**	005type	0.60	1.7	1.9	Available
		MMD-UP0071SPHY-E	007type	0.80	2.2	2.5	Available
		MMD-UP0091SPHY-E	009type	1.00	2.8	3.2	Available
		MMD-UP0121SPHY-E	012type	1.25	3.6	4.0	Available
		MMD-UP0151SPHY-E	015type	1.70	4.5	5.0	Available
		MMD-UP0181SPHY-E	018type	2.00	5.6	6.3	Available
		MMD-UP0241SPHY-E	024type	2.50	7.1	8.0	Available
		MMD-UP0271SPHY-E	027type	3.00	8.0	9.0	Available

Type	Appearance	Model name	Capacity rank	Capacity code	Cooling capacity(kW)	Heating capacity(kW)	PMV Kit
Concealed Duct High Static Pressure Type	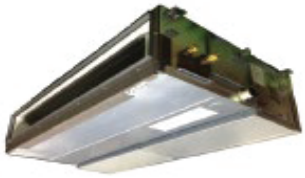	MMD-AP0186HP1-E	018type	2.00	5.6	6.3	-
		MMD-AP0246HP1-E	024type	2.50	7.1	8.0	-
		MMD-AP0276HP1-E	027type	3.00	8.0	9.0	-
		MMD-AP0366HP1-E	036type	4.00	11.2	12.5	-
		MMD-AP0486HP1-E	048type	5.00	14.0	16.0	-
		MMD-AP0566HP1-E	056type	6.00	16.0	18.0	-
		MMD-AP0726HP1-E	072type	8.00	22.4	25.0	-
		MMD-AP0966HP1-E	096type	10.00	28.0	31.5	-
		MMD-UP0181HP-E	018type	2.00	5.6	6.3	-
		MMD-UP0241HP-E	024type	2.50	7.1	8.0	-
		MMD-UP0271HP-E	027type	3.00	8.0	9.0	-
		MMD-UP0361HP-E	036type	4.00	11.2	12.5	-
		MMD-UP0481HP-E	048type	5.00	14.0	16.0	-
		MMD-UP0561HP-E	056type	6.00	16.0	18.0	-
		MMD-UP0721HP-E	072type	8.00	22.4	25.0	-
		MMD-UP0961HP-E	096type	10.00	28.0	31.5	-
Ceiling Type		MMC-AP0158HP-E	015type	1.70	4.5	5.0	-
		MMC-AP0188HP-E	018type	2.00	5.6	6.3	-
		MMC-AP0248HP-E	024type	2.50	7.1	8.0	-
		MMC-AP0278HP-E	027type	3.00	8.0	9.0	-
		MMC-AP0368HP-E	036type	4.00	11.2	12.5	-
		MMC-AP0488HP-E	048type	5.00	14.0	16.0	-
		MMC-AP0568HP-E	056type	6.00	16.0	18.0	-
		MMC-UP0151HP-E	015type	1.70	4.5	5.0	-
		MMC-UP0181HP-E	018type	2.00	5.6	6.3	-
		MMC-UP0241HP-E	024type	2.50	7.1	8.0	-
		MMC-UP0271HP-E	027type	3.00	8.0	9.0	-
		MMC-UP0361HP-E	036type	4.00	11.2	12.5	-
		MMC-UP0481HP-E	048type	5.00	14.0	16.0	-
		MMC-UP0561HP-E	056type	6.00	16.0	18.0	-
High Wall Type (3 series)		MMK-AP0073H1	007type	0.80	2.2	2.5	Available
		MMK-AP0093H1	009type	1.00	2.8	3.2	Available
		MMK-AP0123H1	012type	1.25	3.6	4.0	Available
		MMK-AP0153H1	015type	1.70	4.5	5.0	Available
		MMK-AP0183H1	018type	2.00	5.6	6.3	Available
		MMK-AP0243H1	024type	2.50	7.1	8.0	Available
High Wall Type		MMK-AP0057HP-E	005type	0.60	1.7	1.9	Available
		MMK-AP0077HP-E	007type	0.80	2.2	2.5	Available
		MMK-AP0097HP-E	009type	1.00	2.8	3.2	Available
		MMK-AP0127HP-E	012type	1.25	3.6	4.0	Available
		MMK-AP0157HP-E	015type	1.70	4.5	5.0	Available
		MMK-AP0187HP-E	018type	2.00	5.6	6.3	Available
		MMK-AP0247HP-E	024type	2.50	7.1	8.0	Available
		MMK-UP0051HP-E	005type	0.60	1.7	1.9	Available
		MMK-UP0071HP-E	007type	0.80	2.2	2.5	Available
		MMK-UP0091HP-E	009type	1.00	2.8	3.2	Available
		MMK-UP0121HP-E	012type	1.25	3.6	4.0	Available
		MMK-UP0151HP-E	015type	1.70	4.5	5.0	Available
		MMK-UP0181HP-E	018type	2.00	5.6	6.3	Available
		MMK-UP0241HP-E	024type	2.50	7.1	8.0	Available
Floor Standing Cabinet Type		MML-AP0074H1-E	007type	0.80	2.2	2.5	Available
		MML-AP0094H1-E	009type	1.00	2.8	3.2	Available
		MML-AP0124H1-E	012type	1.25	3.6	4.0	Available
		MML-AP0154H1-E	015type	1.70	4.5	5.0	Available
		MML-AP0184H1-E	018type	2.00	5.6	6.3	Available
		MML-AP0244H1-E	024type	2.50	7.1	8.0	Available
		MML-UP0071H-E	007type	0.80	2.2	2.5	Available
		MML-UP0091H-E	009type	1.00	2.8	3.2	Available
		MML-UP0121H-E	012type	1.25	3.6	4.0	Available
		MML-UP0151H-E	015type	1.70	4.5	5.0	Available
		MML-UP0181H-E	018type	2.00	5.6	6.3	Available
		MML-UP0241H-E	024type	2.50	7.1	8.0	Available

Type	Appearance	Model name	Capacity rank	Capacity code	Cooling capacity(kW)	Heating capacity(kW)	PMV Kit
Floor Standing Concealed Type		MML-AP0074BH1-E	007type	0.80	2.2	2.5	-
		MML-AP0094BH1-E	009type	1.00	2.8	3.2	-
		MML-AP0124BH1-E	012type	1.25	3.6	4.0	-
		MML-AP0154BH1-E	015type	1.70	4.5	5.0	-
		MML-AP0184BH1-E	018type	2.00	5.6	6.3	-
		MML-AP0244BH1-E	024type	2.50	7.1	8.0	-
		MML-UP0071BH-E	007type	0.80	2.2	2.5	-
		MML-UP0091BH-E	009type	1.00	2.8	3.2	-
		MML-UP0121BH-E	012type	1.25	3.6	4.0	-
		MML-UP0151BH-E	015type	1.70	4.5	5.0	-
		MML-UP0181BH-E	018type	2.00	5.6	6.3	-
		MML-UP0241BH-E	024type	2.50	7.1	8.0	-
Floor Standing Type		MMF-AP0156H1-E	015type	1.70	4.5	5.0	-
		MMF-AP0186H1-E	018type	2.00	5.6	6.3	-
		MMF-AP0246H1-E	024type	2.50	7.1	8.0	-
		MMF-AP0276H1-E	027type	3.00	8.0	9.0	-
		MMF-AP0366H1-E	036type	4.00	11.2	12.5	-
		MMF-AP0486H1-E	048type	5.00	14.0	16.0	-
		MMF-AP0566H1-E	056type	6.00	16.0	18.0	-
		MMF-UP0151H-E	015type	1.70	4.5	5.0	-
		MMF-UP0181H-E	018type	2.00	5.6	6.3	-
		MMF-UP0241H-E	024type	2.50	7.1	8.0	-
		MMF-UP0271H-E	027type	3.00	8.0	9.0	-
		MMF-UP0361H-E	036type	4.00	11.2	12.5	-
		MMF-UP0481H-E	048type	5.00	14.0	16.0	-
		MMF-UP0561H-E	056type	6.00	16.0	18.0	-
Console Type		MML-AP0074NH1-E	007type	0.80	2.2	2.5	Available
		MML-AP0094NH1-E	009type	1.00	2.8	3.2	Available
		MML-AP0124NH1-E	012type	1.25	3.6	4.0	Available
		MML-AP0154NH1-E	015type	1.70	4.5	5.0	Available
		MML-AP0184NH1-E	018type	2.00	5.6	6.3	Available
		MML-UP0071NHP-E	007type	0.80	2.2	2.5	Available
		MML-UP0091NHP-E	009type	1.00	2.8	3.2	Available
		MML-UP0121NHP-E	012type	1.25	3.6	4.0	Available
		MML-UP0151NHP-E	015type	1.70	4.5	5.0	Available
		MML-UP0181NHP-E	018type	2.00	5.6	6.3	Available
Hot Water Module		MMW-AP0271LQ-E	027type	2.50	-	8.0	-
		MMW-AP0561LQ-E	056type	5.00	-	16.0	-
		MMW-UP0271LQ-E	027type	2.50	-	8.0	-
		MMW-UP0561LQ-E	056type	5.00	-	16.0	-

1-2-3. Branching joints and headers

Name	Model name	Appearance	Remarks
Y-shape branching joint	RBM-BY55E RBM-BY105E		
4-branching header	RBM-HY1043E		
8-branching header	RBM-HY1083E		

1-2-4. PMV Kits

Name	Model name	Appearance	Remarks
PMV Kits	RBM-PMV0363E RBM-PMV0361U-E		RBM-PMV_U-E is not available for AP indoor unit.
	RBM-PMV0903E RBM-PMV0901U-E		RBM-PMV_U-E is not available for AP indoor unit.

1-2-5. Remote controllers

Name	Model Name	Remarks
Wired remote controller	RBC-AMT32E-E	
	RBC-AMTU31-E	TU2C-LINK Control
	RBC-AMS55E-EN/ES	-EN : English, Italian, Polish, Greece, Russian, Turkish -ES : English, Spanish, Portuguese, French, Dutch, German
	RBC-AMSU51-EN/ES	TU2C-LINK Control -EN : English, Italian, Polish, Greece, Russian, Turkish -ES : English, Spanish, Portuguese, French, Dutch, German
Compact wired remote controller	RBC-ASCU11-E	TU2C-LINK Control
Remote controller with schedule timer (7-day timer function)	RBC-AMS41E	
Simple wired remote controller	RBC-AS41E	
Wireless remote controller kit	RBC-AX32U(W)-E	For 4-way Air Discharge Cassette
	RBC-AXU31U-E	For 4-way Air Discharge Cassette (TU2C-LINK Control)
	RBC-AX32UM(W)-E	For Compact 4-way Cassette
	RBC-AXU31UM-E	For Compact 4-way Cassette (TU2C-LINK Control)
	RBC-AX32UW(W)-E	For 2-way Air Discharge Casette
	RBC-AXU31UW-E	For 2-way Air Discharge Cassette (TU2C-LINK Control)
	TCB-AX33CE	For Under Ceiling 8series, 1-way Air Discharge Cassette SH 4series
	RBC-AXU31C-E	For Under Ceiling, 1-way Air Discharge Cassette (TU2C-LINK Control)
	TCB-AX32E2	For All other units
	TCB-AXU31-E	For All other units (TU2C-LINK Control)
Schedule timer	TCB-EXS21TLE	
64 Central remote controller	TCB-SC643TLE	
	TCB-SC640U-E	TU2C-LINK Control

1-2-6. Optional PCB of outdoor unit

Name	Model Name	Remarks
Power peak-cut control board	TCB-PCDM4E	
External master ON/OFF control board	TCB-PCMO4E	
Output control board	TCB-PCIN4E	

1-2-7. Controls

Name	Model Name	Remarks
Touch Screen Controller	BMS-CT5121E	
	BMS-CT2560U-E	TU2C-LINK Control
Smart manager	BMS-SM1280HTLE	
Smart manager with data analyzer	BMS-SM1281ETLE	
Energy Monitoring Relay Interface	BMS-IFWH5E	
Relay Interface	BMS-IFLSV4E	
Digital I/O Relay Interface	BMS-IFDD03E	
LonWorks LN Interface	TCB-IFLN642TLE	
Modbus Interface	TCB-IFMB641TLE	
	BMS-IFMB1280U-E	TU2C-LINK Control
Analog Interface	TCB-IFCB640TLE	
BN Interface	BMS-IFBN640TLE	
	BMS-IFBN1280U-E	TU2C-LINK Control

2-1. Selection flow chart

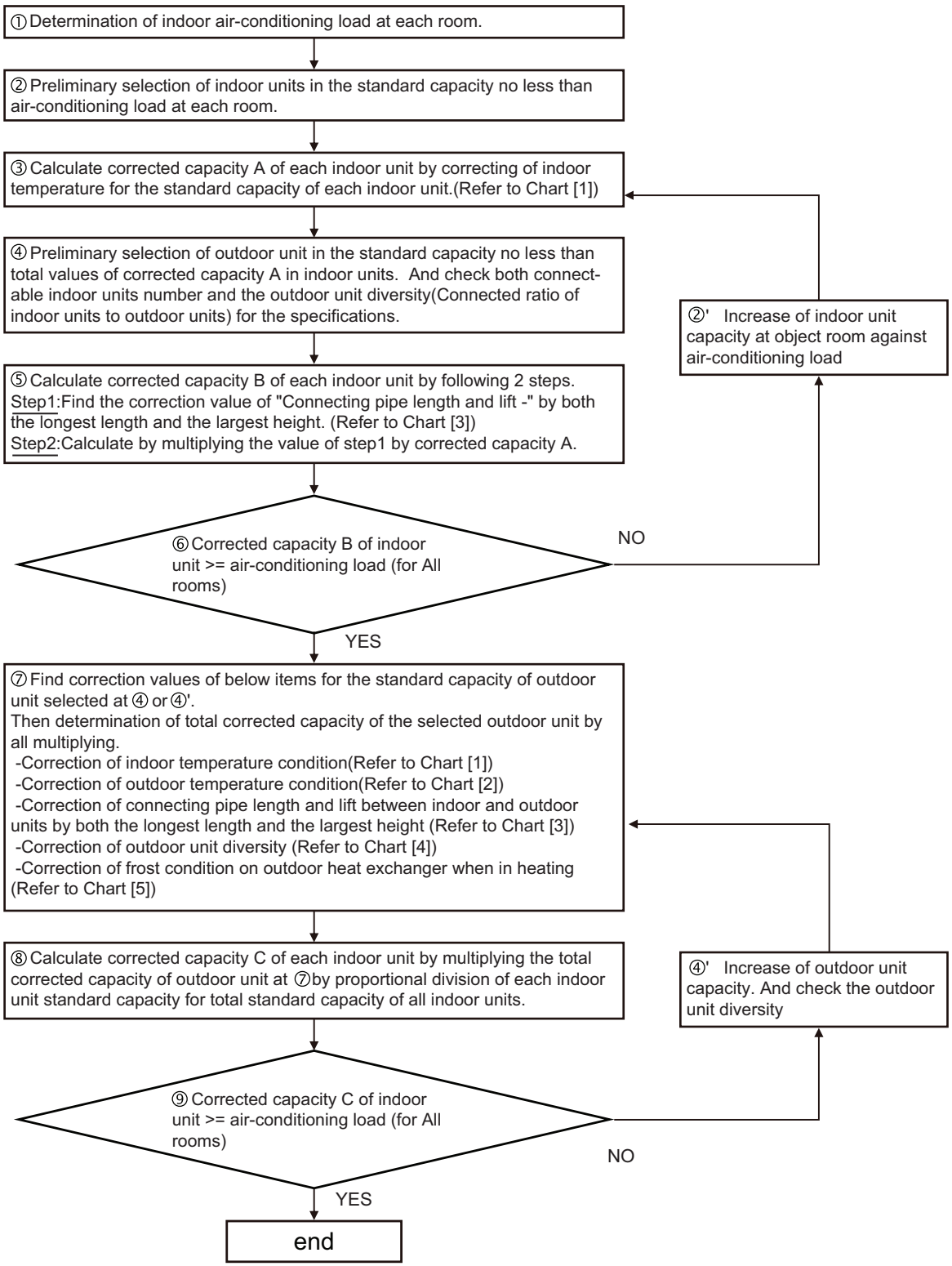

2-2. Combination conditions for indoor unit and outdoor unit

Indoor unit can connect 80 % to 130 % of Outdoor unit capacity.

2-2-1. For indoor unit, the capacity code is decided for each capacity rank.

Capacity rank type		005	007	009	012	015	018	024	027	030	036	048	056	072	096
Capacity code	Equivalent to HP	0.6	0.8	1.0	1.25	1.7	2.0	2.5	3.0	3.2	4.0	5.0	6.0	8.0	10.0

NOTE:

Capacity rank : Correspondence to Btu/h. Capacity code : Correspondence to Horsepower.

2-2-2. For outdoor unit, maximum No. of connectable indoor units and total capacity code of indoor units are decided.

Outdoor unit capacity type	Capacity code	No. of connectable indoor units	Total capacity code of connectable indoor units	
	Equivalent to HP		Min. (HP)	Max. (HP)
MCY-MHP0806HS8*	8	2 to 12	6.4	10.4
MCY-MHP1006HS8*	10	2 to 16	8.0	13.0 (When the number of indoor units is 2 to 12)
				11.0 (When the number of indoor units is 13 to 16)

2-3. Cooling / heating capacity characteristics

2-3-1. Correction charts for cooling capacity calculation

[1] Capacity correction value vs. indoor air wet bulb temperature

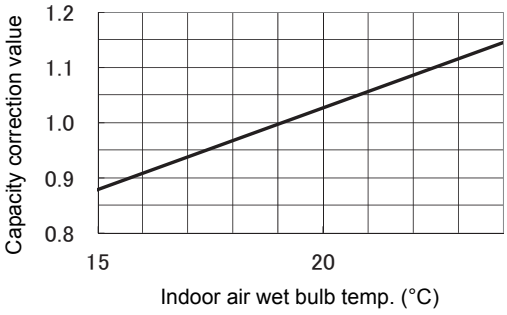

[2] Capacity correction value vs. outdoor air dry bulb temperature

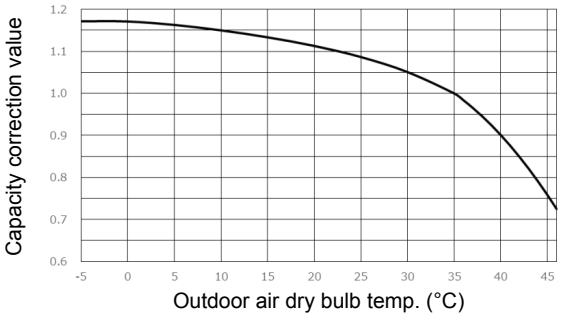

[3] Capacity correction value vs. connecting pipe length and lift difference between indoor and outdoor units

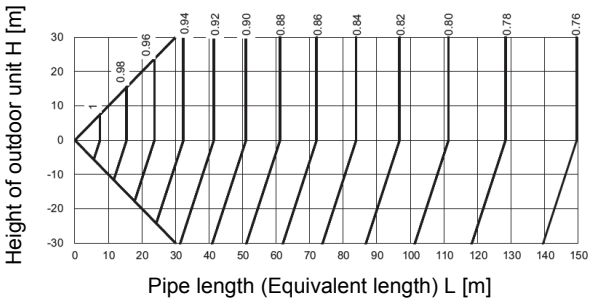

[4]* Correction of outdoor unit diversity

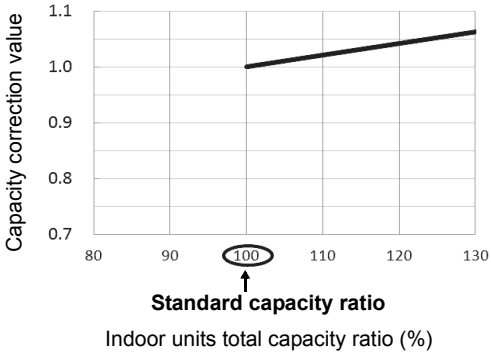

*** : Coefficient to use for correction of outdoor unit capacity when total capacity of the indoor units are not equal to the outdoor unit capacity.**

2-3-2. Correction charts for heating capacity calculation

[1] Capacity correction value vs. indoor air dry bulb temperature

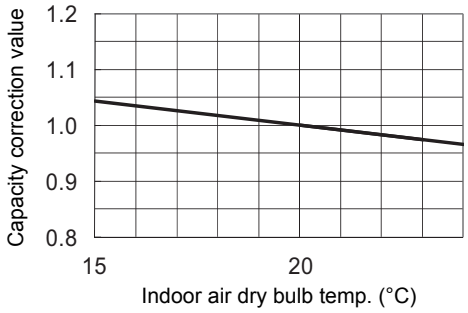

[2] Capacity correction value vs. outdoor air wet bulb temperature

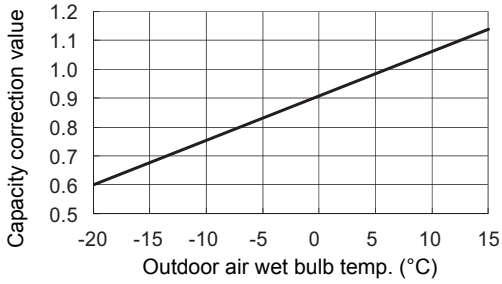

[3] Capacity correction value vs. connecting pipe length and lift difference between indoor and outdoor units

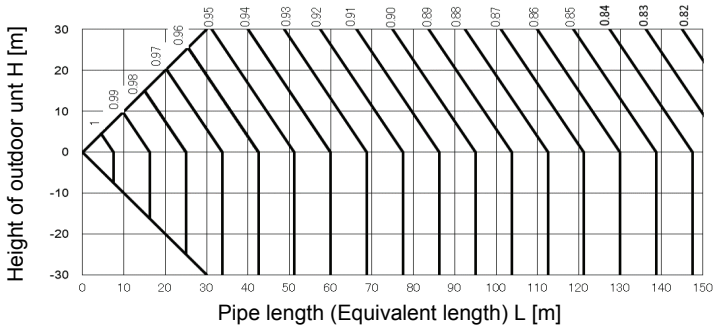

[4]* Correction of outdoor unit diversity

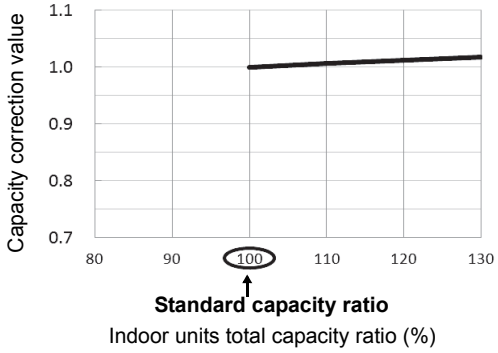

*** : Coefficient to use for correction of outdoor unit capacity when total capacity of the indoor units are not equal to the outdoor unit capacity.**

2-3-3. Capacity correction in case of frost on the outdoor heat exchanger in heating

Correct the heating capacity when frost was found on the outdoor heat exchanger.

Heating capacity = Capacity after correction of outdoor unit x Correction value of capacity resulted from frost
(Capacity after correction of outdoor unit: Heating capacity calculated in the above item 2.)

[5] capacity correction in case of frost on the outdoor heat exchanger

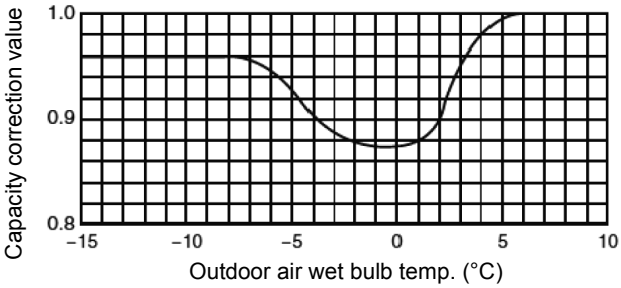

2-4. Operational temperature range

Cooling

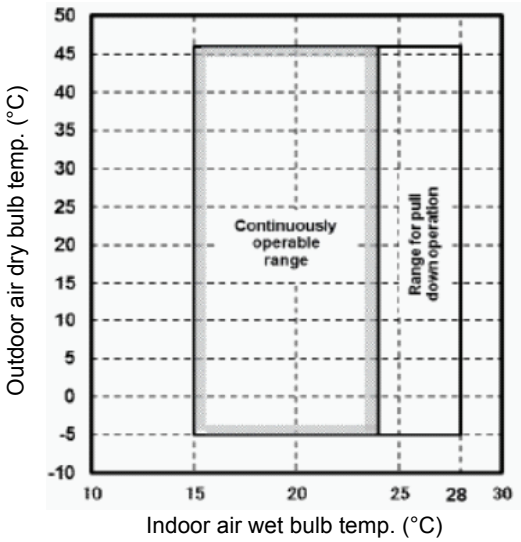

Heating

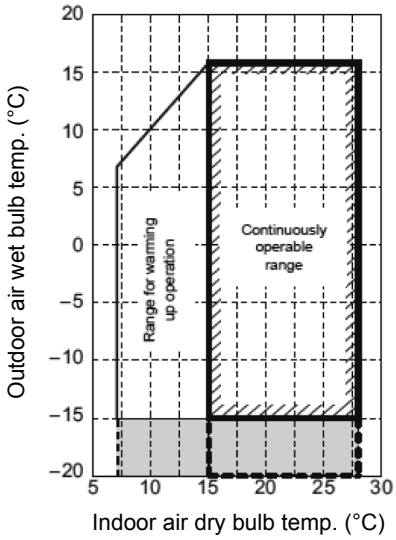

The unit will operate down to an outdoor temperature of -20 °C, however considerable performance decrease will be expected below -15 °C. Therefore please consider installation location/surroundings and system design when expected to operate between -15 °C and -20 °C.

3-1. Free branching system

[1] Line branching system
[2] Header branching system
[3] Header branching system after line branching
[4] Line branching system after header branching
[5] Header branching system after header branching
The above five branching systems enable to dramatically increase the flexibility of refrigerant piping design.

Line branching system	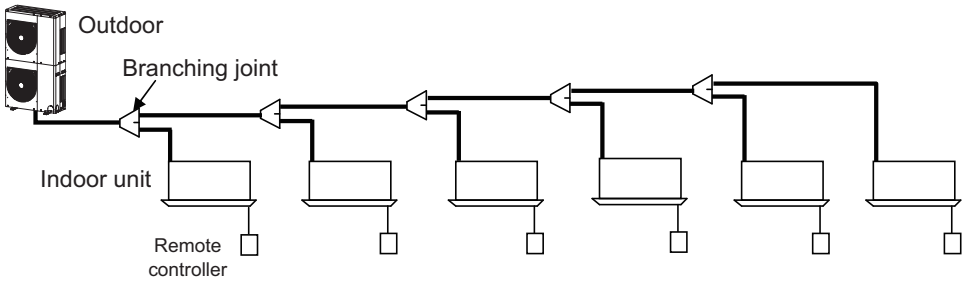
Header branching system	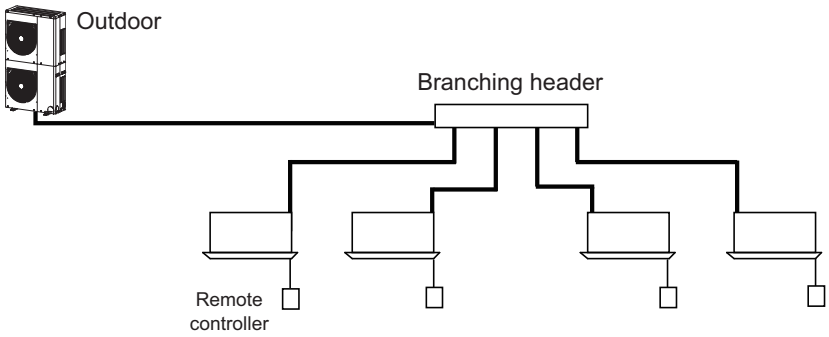
Header branching system	* In case of "PMV Kit" 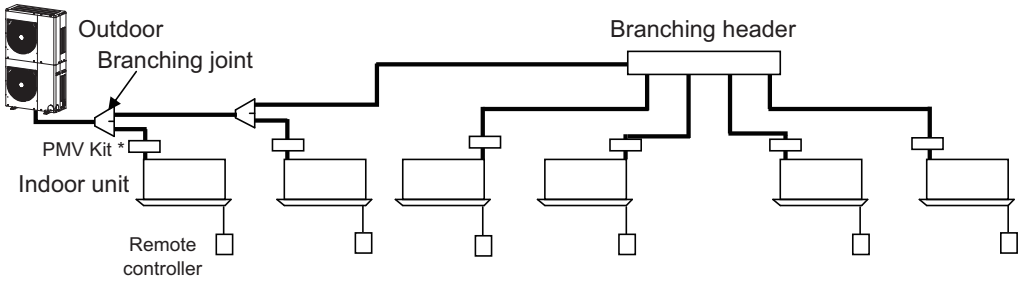
Line branching system after header branching Header branching system after header branching	* In case of "PMV Kit" 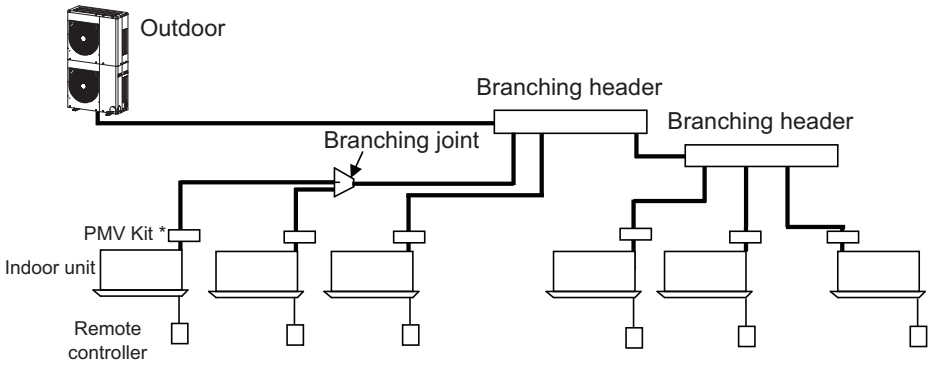

3-2. Allowable length / height difference of refrigerant piping

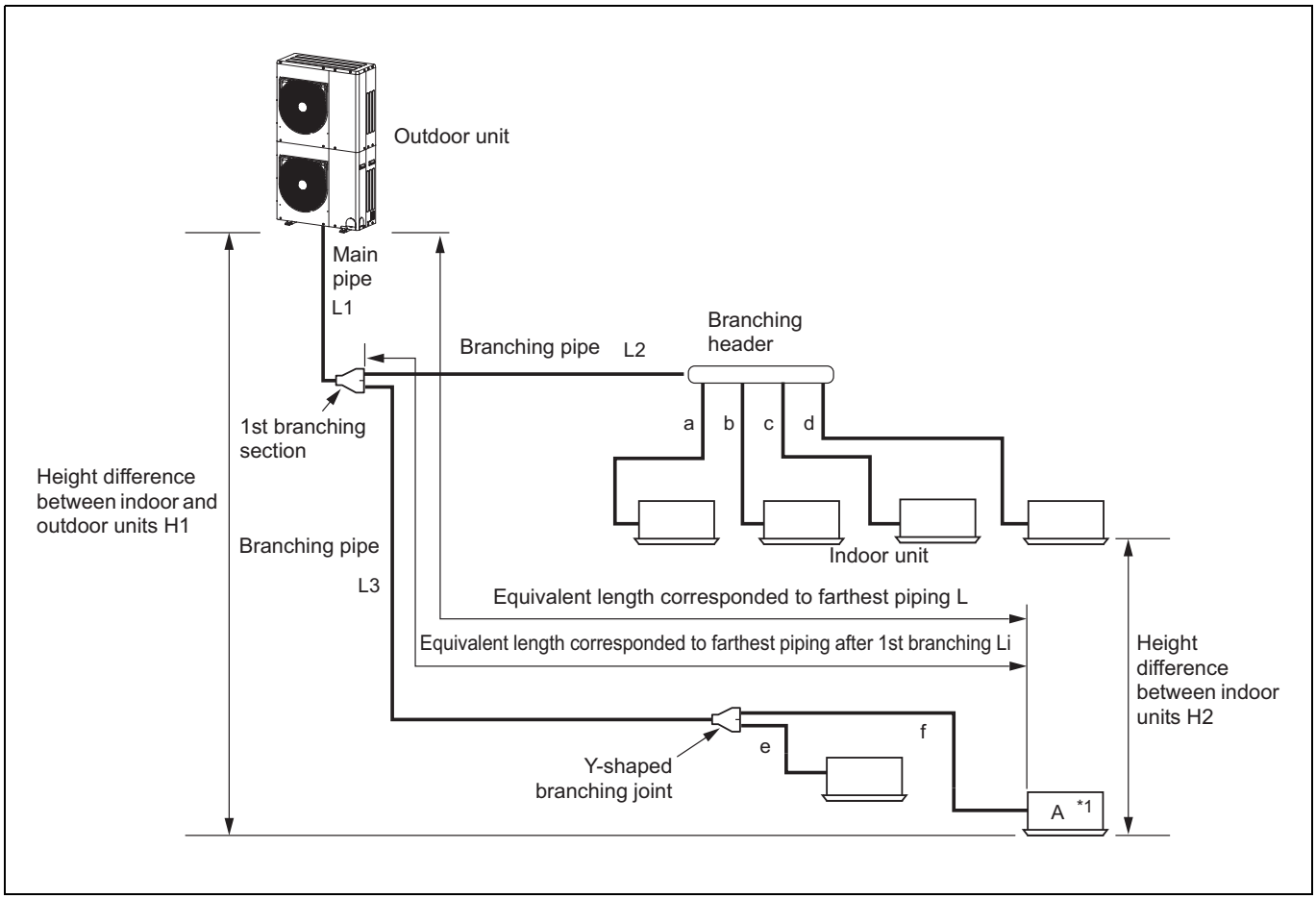

			Allowable value	Pipes
Piping Length	Total extension of pipe (liquid pipe, real length)		300 m	L1 + L2 + L3 + a + b + c + d + e + f
	Furthest piping length L (*1)	Real length	120 m	L1 + L3 + f
		Equivalent length	150 m	
	Max. equivalent length of main pipe		80 m *2	L1
	Max. equivalent length of furthest piping from 1st branching Li (*1)		40 m	L3 + f
	Max. real length of indoor unit connecting pipe		15 m	a, b, c, d, e, f
Height Difference	Height between indoor and outdoor units H1	Upper outdoor unit	30 m *2	
		Lower outdoor unit	30 m *2	
	Height between indoor units H2		15 m	

*1 Furthest indoor unit from 1st branch to be named “A”.
*2 The main liquid pipe size varies depending on L1 and H1. See the page of “Selection of refrigerant piping” for details.

3-3. Selection of refrigerant piping

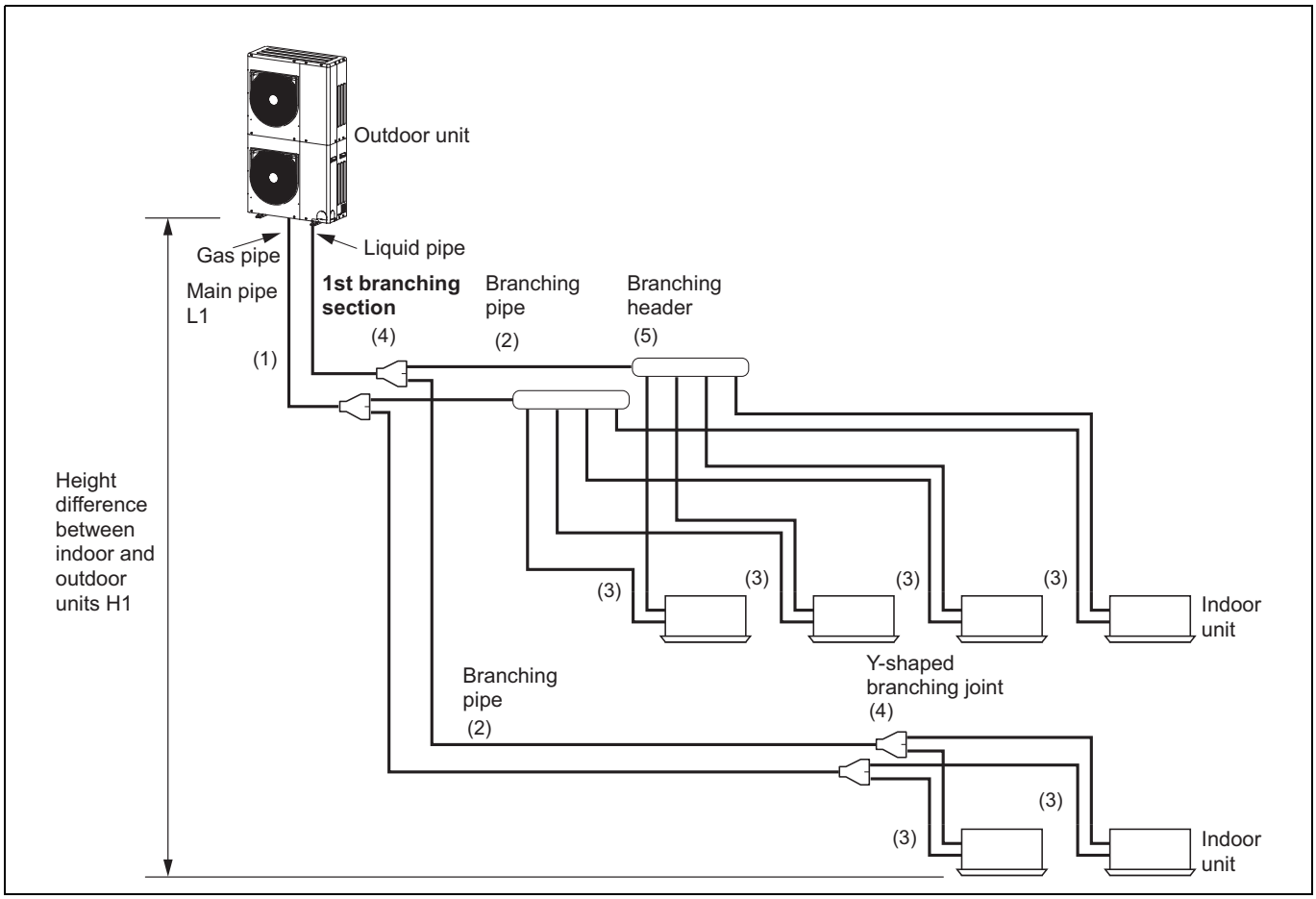

No.	Piping parts	Name	Selection of pipe size	Remarks
(1)	Outdoor unit ↓ 1st branching section	Main pipe	**0806 type** **1006 type**	* The main liquid pipe size differs based on outdoor unit capacity type, equivalent length of main pipe, and hight difference between outdoor and indoor units.
(2)	Branching section ↓ Branching section	Branching pipe	**Pipe size between branching sections**	Pipe size differs based on the total capacity code value of indoor units at the downstream side. If the total value exceeds the capacity code of the outdoor unit, apply the capacity code of the outdoor unit.

0806 type

Conditions for size of main pipe selection *		Size of main pipe	
Height between indoor and outdoor units H1(m)	**Equivalent length of main pipe L1(m)**	**Gas pipe**	**Liquid pipe**
30 ≥ H1 > 20	40 > L1	19.05	9.52
	L1 ≥ 40		12.70
20 ≥ H1 > 10	60 > L1		9.52
	L1 ≥ 60		12.70
10 ≥ H1 > 0	No condition		9.52

1006 type

Conditions for size of main pipe selection *		Size of main pipe	
Height between indoor and outdoor units H1(m)	**Equivalent length of main pipe L1(m)**	**Gas pipe**	**Liquid pipe**
30 ≥ H1 > 20	30 > L1	22.22	9.52
	L1 ≥ 30		12.70
20 ≥ H1 > 10	40 > L1		9.52
	L1 ≥ 40		12.70
10 ≥ H1 > 0	50 > L1		9.52
	L1 ≥ 50		12.70

Pipe size between branching sections

Total capacity codes of indoor units at down stream side		Gas pipe	Liquid pipe
Equivalent to HP	**Equivalent to capacity**		
Below 2.4	Below 6.6	12.70	9.52
2.4 to below 6.4	6.6 to below 18.0	15.88	9.52
6.4 or more	18.0 or more	22.22	12.70

* When exceed the main pipe size, use the same size as the main pipe.

<table>
<tr><th>No.</th><th>Piping parts</th><th>Name</th><th>Selection of pipe size</th><th>Remarks</th></tr>
<tr><td>(3)</td><td>Branching section
↓
Indoor unit</td><td>Indoor unit connecting pipe</td><td>Connecting pipe size of indoor unit
<table>
<tr><th>Capacity rank</th><th>Gas pipe</th><th>Liquid pipe</th></tr>
<tr><td>005 to 012 type</td><td>9.52</td><td>6.35</td></tr>
<tr><td>015 to 018 type</td><td>12.70</td><td>6.35</td></tr>
<tr><td>024 to 056 type</td><td>15.88</td><td>9.52</td></tr>
<tr><td>072 to 096 type</td><td>22.2</td><td>12.7</td></tr>
</table></td><td></td></tr>
<tr><td>(4)</td><td>Branching section</td><td>Y-shaped branching joint</td><td>Selection of branching section (Y-shaped branching joint)
<table>
<tr><th></th><th colspan="2">Total capacity codes of indoor units at down stream side</th><th rowspan="2">Model name</th></tr>
<tr><td></td><td>Equivalent to HP</td><td>Equivalent to capacity</td></tr>
<tr><td rowspan="2">Y-shape branch joint</td><td>Below 6.4</td><td>Below 18.0</td><td>RBM-BY55E</td></tr>
<tr><td>6.4 or more</td><td>18.0 or more</td><td>RBM-BY105E</td></tr>
</table></td><td></td></tr>
<tr><td>(5)</td><td>Branching section</td><td>Branching header</td><td>Selection of branching section (Branching header)
<table>
<tr><th colspan="2"></th><th>Model name</th></tr>
<tr><td rowspan="2">Branching header</td><td>For 4 branches</td><td>RBM-HY1043E</td></tr>
<tr><td>For 8 branches</td><td>RBM-HY1083E</td></tr>
</table></td><td></td></tr>
</table>

3-4. Allowable length / height difference of refrigerant piping with PMV Kit

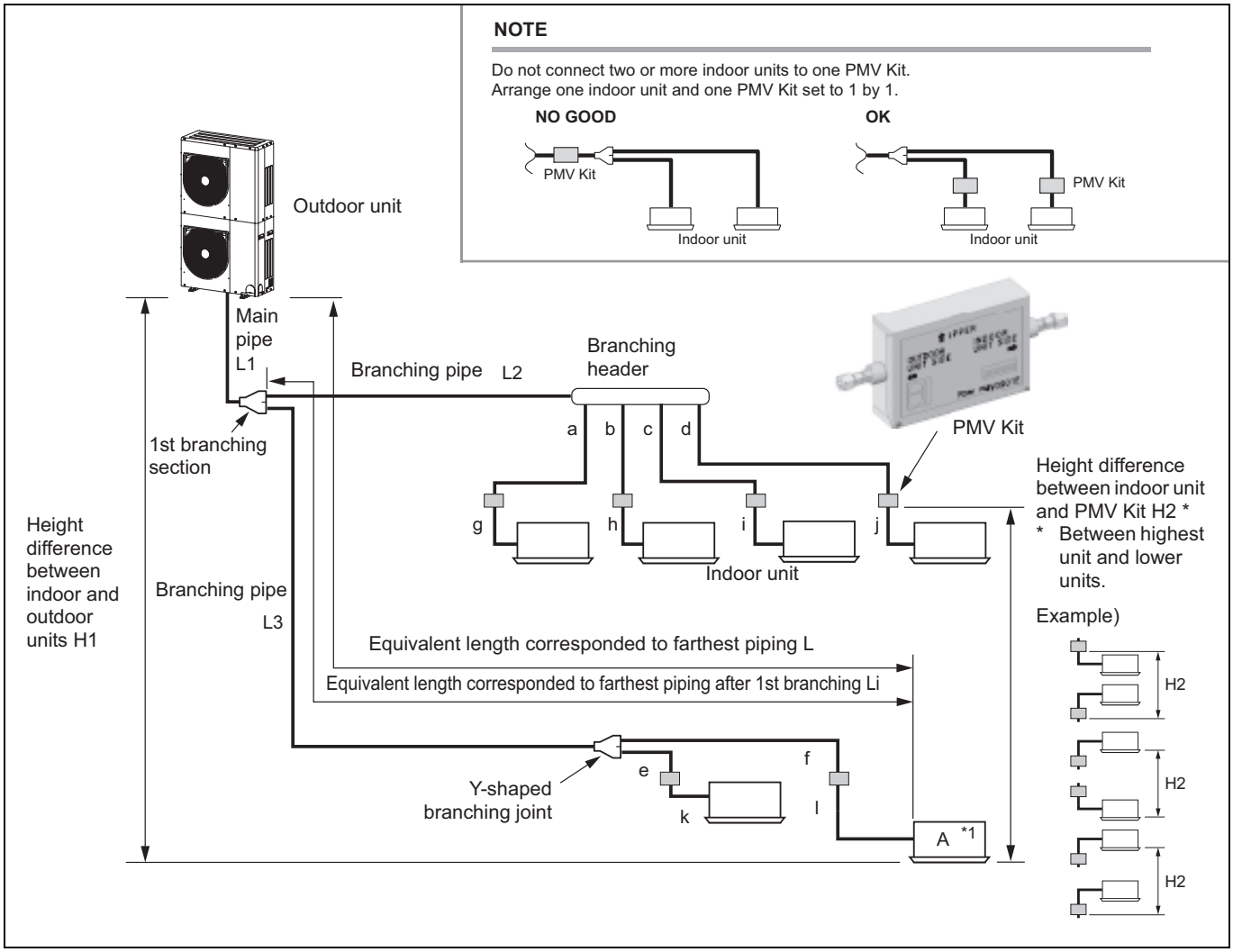

			Allowable value	Pipes
Piping Length	Total extension of pipe (Liquid pipe, real length)		250 m	L1 + L2 + L3 + a + b + c + d + e + f + g + h + i + j + k + l
	Furthest piping length L (*1)	Real length	100 m	L1 + L3 + f + l
		Equivalent length	130 m	
	Max. equivalent length of main pipe		70 m *2	L1
	Max. equivalent length of furthest piping from 1st branching Li (*1)		30 m	L3 + f + l
	Max. real length of indoor unit connecting pipe		15 m	a + g, b + h, c + i, d + j, e + k, f + l
	Real length between PMV Kit and indoor unit		2 m or more Below 10 m	g, h, i, j, k, l
Height Difference	Height between indoor and outdoor units H1	Upper outdoor unit	30 m *2	
		Lower outdoor unit	30 m *2	
	Height between indoor units (PMV Kit) H2		15 m	

*1 Furthest indoor unit from 1st branch to be named “A”.
*2 The main liquid pipe size varies depending on L1 and H1. See the page of “Selection of refrigerant piping” for details.

3-5. Selection of refrigerant piping with PMV Kit

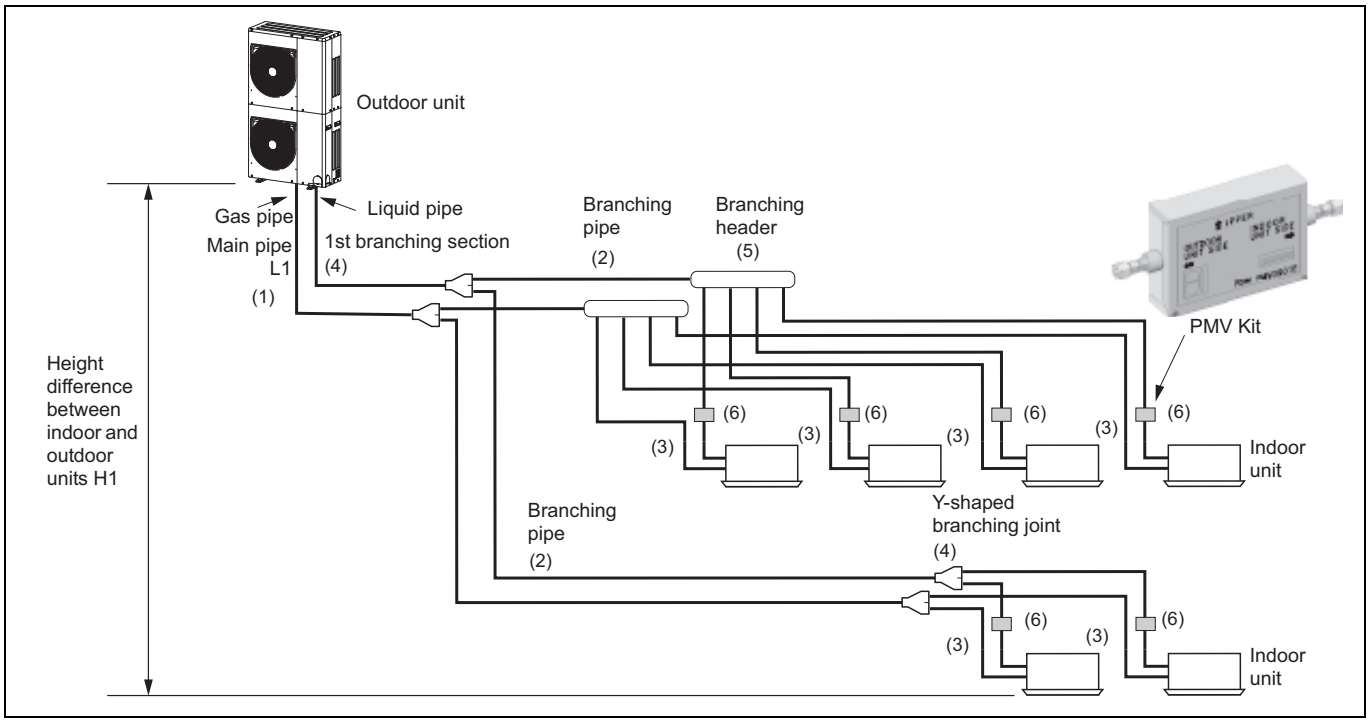

No.	Piping parts	Name	Selection of pipe size	Remarks
(1)	Outdoor unit ↓ 1st branching section	Main pipe	**0806 type** Conditions for size of main pipe selection * / Size of main pipe Height between indoor and outdoor units H1(m) / Equivalent length of main pipe L1(m) / Gas pipe / Liquid pipe 30 ≥ H1 > 20 / 40 > L1 / 19.05 / 9.52 L1 ≥ 40 / 12.70 20 ≥ H1 > 10 / 60 > L1 / 9.52 L1 ≥ 60 / 12.70 10 ≥ H1 > 0 / No condition / 9.52 **1006 type** Conditions for size of main pipe selection * / Size of main pipe Height between indoor and outdoor units H1(m) / Equivalent length of main pipe L1(m) / Gas pipe / Liquid pipe 30 ≥ H1 > 20 / 30 > L1 / 22.22 / 9.52 L1 ≥ 30 / 12.70 20 ≥ H1 > 10 / 40 > L1 / 9.52 L1 ≥ 40 / 12.70 10 ≥ H1 > 0 / 50 > L1 / 9.52 L1 ≥ 50 / 12.70	* The main liquid pipe size differs based on outdoor unit capacity type, equivalent length of main pipe, and hight difference between outdoor and indoor units.
(2)	Branching section ↓ Branching section	Branching pipe	**Pipe size between branching sections** Total capacity codes of indoor units at down stream side / Gas pipe / Liquid pipe Equivalent to HP / Equivalent to capacity Below 2.4 / Below 6.6 / 12.70 / 9.52 2.4 to below 6.4 / 6.6 to below 18.0 / 15.88 / 9.52 6.4 or more / 18.0 or more / 22.22 / 12.70 * When exceed the main pipe size, use the same size as the main pipe.	Pipe size differs based on the total capacity code value of indoor units at the downstream side. If the total value exceeds the capacity code of the outdoor unit, apply the capacity code of the outdoor unit.
(3)	Branching section ↓ Indoor unit	Indoor unit connecting pipe	**Connecting pipe size of indoor unit** Capacity rank / Gas pipe / Liquid pipe 005 to 012 type / 9.5 / 6.4 015 to 018 type / 12.7 / 6.4 024 to 056 type / 15.9 / 9.5 072 to 096 type / 22.2 / 12.7	

<table>
<tr><th>No.</th><th>Piping parts</th><th>Name</th><th>Selection of pipe size</th><th>Remarks</th></tr>
<tr><td>(4)</td><td>Branching section</td><td>Y-shaped branching joint</td><td>

Selection of branching section (Y-shaped branching joint)

<table>
<tr><th rowspan="2"></th><th colspan="2">Total capacity codes of indoor units at down stream side</th><th rowspan="2">Model name</th></tr>
<tr><th>Equivalent to HP</th><th>Equivalent to capacity</th></tr>
<tr><td rowspan="2">Y-sharp branch joint</td><td>Below 6.4</td><td>Below 18.0</td><td>RBM-BY55E</td></tr>
<tr><td>6.4 or more</td><td>18.0 or more</td><td>RBM-BY105E</td></tr>
</table>

</td><td></td></tr>
<tr><td>(5)</td><td>Branching section</td><td>Branching header</td><td>

Selection of branching section (Branching header)

<table>
<tr><th colspan="2"></th><th>Model name</th></tr>
<tr><td rowspan="2">Branching header</td><td>For 4 branches</td><td>RBM-HY1043E</td></tr>
<tr><td>For 8 branches</td><td>RBM-HY1083E</td></tr>
</table>

</td><td></td></tr>
<tr><td>(6)</td><td>PMV Kit</td><td>PMV Kit</td><td>

Selection of PMV Kit

<table>
<tr><th>Indoor unit capacity type</th><th>Model name</th></tr>
<tr><td>005 to 012 type</td><td>RBM-PMV0363E
RBM-PMV0361U-E</td></tr>
<tr><td>015 to 027 type</td><td>RBM-PMV0903E
RBM-PMV0901U-E</td></tr>
</table>

* PMV kit can be connected less than 027 type FCU.

</td><td></td></tr>
</table>

3-6. Charging requirement with additional refrigerant

After finishing vacuuming, exchange the vacuum pump with a refrigerant canister and start additional charging of refrigerant.

Refrigerant amount charged in factory

Outdoor unit type	0806HS8	1006HS8
Charging amount (kg)	4.4	4.4

Calculation of additional refrigerant charge amount

Refrigerant charge amount factory default does not include the refrigerant for pipes at the local site.
For refrigerant to be charged in pipes at the local site, calculate the amount and charge it additionally.

NOTE

When the additional refrigerant amount indicates minus as the result of calculation, it is not necessary to subtract any refrigerant.

Calculating formula

Additional refrigerant charge amount at lacal site (kg) = Real length of liquid pipe x Additional refrigerant charge amount per 1 m liquid pipe (Table 1) + Corrective amount of refrigerant depending on the indoor units (Table 2) + Compensation by outdoor HP (Table 3)

Table 1

Liquid pipe dia. (mm)	6.35	9.52	12.70
Additional refrigerant amount /1 m liquid pipe (kg / m)	0.025	0.055	0.105

Table 2

		Capacity rank	005	007	009	012	015	018	024	027	030	036	048	056	072	096
		Capacity code (Equivalent to HP)	0.6	0.8	1.0	1.25	1.7	2.0	2.5	3.0	3.2	4.0	5.0	6.0	8.0	10.0
Indoor unit model name	4-way cassette	MMU-*P****HP*	-	-	0.4	0.4	0.8	0.8	0.8	0.8	0.8	1.2	1.2	1.2	-	-
	Compact 4-way cassette	MMU-*P****MH*	0.3	0.4	0.4	0.4	0.6	0.6	-	-	-	-	-	-	-	-
	2-way cassette	MMU-*P****WH*	-	0.4	0.4	0.4	0.5	0.7	0.7	0.7	0.7	1.1	1.1	1.1	-	-
	1-way cassette	MMU-*P****YH / SH*	-	0.4	0.4	0.4	0.5	0.5	0.6	-	-	-	-	-	-	-
		MMU-*P****YHP*	0.3	0.3	0.3	0.3	-	-	-	-	-	-	-	-	-	-
	Concealed duct	MMD-*P****BHP*	-	0.3	0.3	0.3	0.5	0.5	0.8	0.8	0.8	1.1	1.1	1.1	-	-
	Slim duct	MMD-AP****SPH*	0.3	0.3	0.3	0.3	0.5	0.5	0.8	0.8	-	-	-	-	-	-
	Compact slim duct	MMD-*P****SPHY*	0.3	0.4	0.4	0.4	0.5	0.5	0.7	0.7	-	-	-	-	-	-
	Concealed duct High static pressure	MMD-*P****HP*	-	-	-	-	-	0.7	0.7	0.7	-	1.1	1.1	1.1	2.1	2.1
	Ceiling	MMC-*P****HP*	-	-	-	-	0.6	0.6	0.8	0.8	-	1.2	1.2	1.2	-	-
	High wall	MMK-AP****H*	-	0.5	0.5	0.5	0.7	0.7	0.7	-	-	-	-	-	-	-
		MMK-*P****HP*	0.3	0.3	0.3	0.3	0.7	0.7	0.7	-	-	-	-	-	-	-
	Floor standing	MMF-*P****H*	-	-	-	-	0.7	0.7	1.0	1.0	-	1.3	1.3	1.3	-	-
	Floor standing cabinet	MML-*P****H*	-	0.5	0.5	0.5	0.5	0.8	0.8	-	-	-	-	-	-	-
	Console	MML-*P****NH(P)*	-	0.5	0.5	0.5	0.5	0.5	-	-	-	-	-	-	-	-

(Unit: kg)

	Capacity rank	027	056
	Capacity code (Equivalent to HP)	2.5	5.0
Hot water module	MMW-AP****LQ*	0.2	0.4

Table 3

Outdoor unit type	0806HS8	1006HS8
Compensation by outdoor HP (kg)	–1.0	–1.0

4-1. General

- **The appliance shall be installed in a accordance with national wiring regulations.**
  Capacity shortages of the power circuit or an incomplete installation may cause an electric shock or fire.
- Perform wiring of power supply complying with the rules and regulations of the local electric company.
- Never connect AC voltage power to the control wiring terminal block (U1, U2, U3, U4); otherwise the unit may break down.
- Be sure that electric wiring does not come into contact with high-temperature parts of piping; otherwise the coating of cables may melt and cause an accident.
- Locate wiring system for the control and refrigerant piping system in the same line.
- Do not turn on the power supply of the indoor units until vacuuming of the refrigerant pipe has finished.
- For the wiring of power to indoor units and that between indoor and outdoor units, follow the instructions in the installation manual of each indoor unit.

4-2. Electrical wiring design

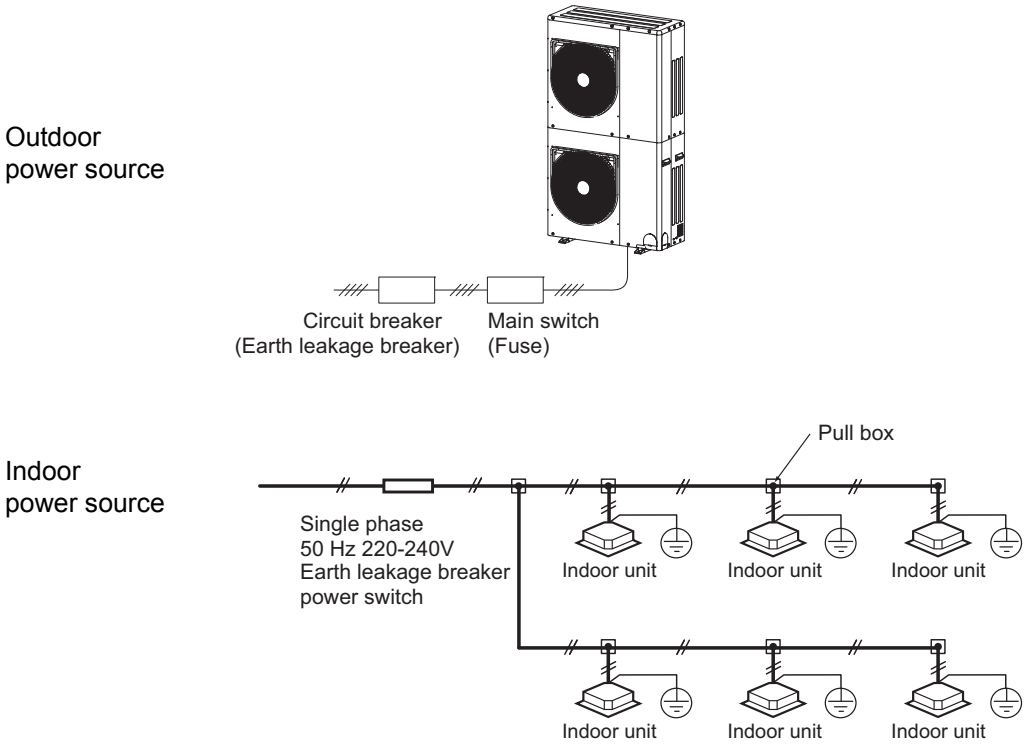

Determine the wire size for the indoor unit according to the number of connected indoor units downstream.

4-3. Outdoor unit power supply

Electrical characteristics

Model name	Normal Voltage (V-Ph-Hz)	Voltage Range		Compressor	Fan Motor	Power Supply	
		Min	Max	kW	kW	MCA	MOCP
MCY-MHP0806HS8-E	380 to 415 - 3 - 50	342	456	5.60	0.100 × 2	17.0	20.0
MCY-MHP1006HS8-E	380 to 415 - 3 - 50	342	456	5.60	0.100 × 2	20.0	25.0

MCA : Maximum Circuit Amps
MOCP : Maximum Overcurrent Protection (Amps)

4-4. Indoor unit power supply

Electrical characteristics (50Hz)

Type	Model name	Normal Voltage (V-Ph-Hz)	Voltage Range		Fan Motor		Power Supply	
			Min	Max	kW	FLA	MCA	MOCP
4-Way Air Discharge Cassette Type	MMU-AP0094HP1-E	230-1-50	198	264	0.014	0.63	0.79	15
	MMU-AP0124HP1-E	230-1-50	198	264	0.014	0.63	0.79	15
	MMU-AP0154HP1-E	230-1-50	198	264	0.014	0.80	1.00	15
	MMU-AP0184HP1-E	230-1-50	198	264	0.014	0.80	1.00	15
	MMU-AP0244HP1-E	230-1-50	198	264	0.020	0.87	1.09	15
	MMU-AP0274HP1-E	230-1-50	198	264	0.020	0.87	1.09	15
	MMU-AP0304HP1-E	230-1-50	198	264	0.020	0.87	1.09	15
	MMU-AP0364HP1-E	230-1-50	198	264	0.068	1.15	1.44	15
	MMU-AP0484HP1-E	230-1-50	198	264	0.072	1.15	1.44	15
	MMU-AP0564HP1-E	230-1-50	198	264	0.072	1.15	1.44	15
	MMU-UP0091HP-E	230-1-50	198	264	0.060	0.63	0.79	15
	MMU-UP0121HP-E	230-1-50	198	264	0.060	0.63	0.79	15
	MMU-UP0151HP-E	230-1-50	198	264	0.060	0.80	1.00	15
	MMU-UP0181HP-E	230-1-50	198	264	0.060	0.80	1.00	15
	MMU-UP0241HP-E	230-1-50	198	264	0.060	0.87	1.09	15
	MMU-UP0271HP-E	230-1-50	198	264	0.060	0.87	1.09	15
	MMU-UP0301HP-E	230-1-50	198	264	0.060	0.87	1.09	15
	MMU-UP0361HP-E	230-1-50	198	264	0.130	1.15	1.44	15
	MMU-UP0481HP-E	230-1-50	198	264	0.130	1.15	1.44	15
	MMU-UP0561HP-E	230-1-50	198	264	0.130	1.15	1.44	15
Compact 4-way Cassette type	MMU-AP0057MH-E	230-1-50	198	264	0.060	0.18	0.23	15
	MMU-AP0077MH-E	230-1-50	198	264	0.060	0.26	0.33	15
	MMU-AP0097MH-E	230-1-50	198	264	0.060	0.28	0.35	15
	MMU-AP0127MH-E	230-1-50	198	264	0.060	0.29	0.36	15
	MMU-AP0157MH-E	230-1-50	198	264	0.060	0.47	0.59	15
	MMU-AP0187MH-E	230-1-50	198	264	0.060	0.53	0.66	15
	MMU-UP0051MH-E	230-1-50	198	264	0.060	0.18	0.23	15
	MMU-UP0071MH-E	230-1-50	198	264	0.060	0.26	0.33	15
	MMU-UP0091MH-E	230-1-50	198	264	0.060	0.28	0.35	15
	MMU-UP0121MH-E	230-1-50	198	264	0.060	0.29	0.36	15
	MMU-UP0151MH-E	230-1-50	198	264	0.060	0.32	0.40	15
	MMU-UP0181MH-E	230-1-50	198	264	0.060	0.53	0.66	15

Type	Model name	Normal Voltage (V-Ph-Hz)	Voltage Range		Fan Motor		Power Supply	
			Min	Max	kW	FLA	MCA	MOCP
2-Way Air Discharge Cassette Type	MMU-AP0072WH1	230-1-50	198	264	0.020	0.32	0.40	15
	MMU-AP0092WH1	230-1-50	198	264	0.020	0.32	0.40	15
	MMU-AP0122WH1	230-1-50	198	264	0.020	0.32	0.40	15
	MMU-AP0152WH1	230-1-50	198	264	0.020	0.32	0.40	15
	MMU-AP0182WH1	230-1-50	198	264	0.030	0.70	0.88	15
	MMU-AP0242WH1	230-1-50	198	264	0.040	0.81	1.01	15
	MMU-AP0272WH1	230-1-50	198	264	0.040	0.81	1.01	15
	MMU-AP0302WH1	230-1-50	198	264	0.050	0.81	1.01	15
	MMU-AP0362WH1	230-1-50	198	264	0.070	0.87	1.09	15
	MMU-AP0482WH1	230-1-50	198	264	0.070	0.87	1.09	15
	MMU-AP0562WH1	230-1-50	198	264	0.070	0.87	1.09	15
	MMU-UP0071WH-E	230-1-50	198	264	0.060	0.24	0.30	15
	MMU-UP0091WH-E	230-1-50	198	264	0.060	0.24	0.30	15
	MMU-UP0121WH-E	230-1-50	198	264	0.060	0.24	0.30	15
	MMU-UP0151WH-E	230-1-50	198	264	0.060	0.25	0.31	15
	MMU-UP0181WH-E	230-1-50	198	264	0.094	0.32	0.40	15
	MMU-UP0241WH-E	230-1-50	198	264	0.094	0.43	0.54	15
	MMU-UP0271WH-E	230-1-50	198	264	0.094	0.43	0.54	15
	MMU-UP0301WH-E	230-1-50	198	264	0.094	0.50	0.63	15
	MMU-UP0361WH-E	230-1-50	198	264	0.139	0.58	0.73	15
	MMU-UP0481WH-E	230-1-50	198	264	0.139	0.65	0.81	15
	MMU-UP0561WH-E	230-1-50	198	264	0.139	0.89	1.11	15
1-Way Air Discharge Cassette Type	MMU-AP0074YH1-E	230-1-50	198	264	0.022	0.28	0.35	15
	MMU-AP0094YH1-E	230-1-50	198	264	0.022	0.28	0.35	15
	MMU-AP0124YH1-E	230-1-50	198	264	0.022	0.28	0.35	15
	MMU-AP0154SH1-E	230-1-50	198	264	0.030	0.40	0.49	15
	MMU-AP0184SH1-E	230-1-50	198	264	0.030	0.42	0.53	15
	MMU-AP0244SH1-E	230-1-50	198	264	0.030	0.71	0.88	15
	MMU-UP0051YHP-E	230-1-50	198	264	0.030	0.32	0.40	15
	MMU-UP0071YHP-E	230-1-50	198	264	0.030	0.32	0.40	15
	MMU-UP0091YHP-E	230-1-50	198	264	0.030	0.32	0.40	15
	MMU-UP0121YHP-E	230-1-50	198	264	0.030	0.32	0.40	15
	MMU-UP0151SH-E	230-1-50	198	264	0.094	0.39	0.49	15
	MMU-UP0181SH-E	230-1-50	198	264	0.094	0.41	0.51	15
	MMU-UP0241SH-E	230-1-50	198	264	0.094	0.62	0.78	15

Type	Model name	Normal Voltage (V-Ph-Hz)	Voltage Range		Fan Motor		Power Supply	
			Min	Max	kW	FLA	MCA	MOCP
Concealed Duct Type	MMD-AP0076BHP1-E	230-1-50	198	264	0.150	0.30	0.37	15
	MMD-AP0096BHP1-E	230-1-50	198	264	0.150	0.34	0.42	15
	MMD-AP0126BHP1-E	230-1-50	198	264	0.150	0.34	0.42	15
	MMD-AP0156BHP1-E	230-1-50	198	264	0.150	0.48	0.61	15
	MMD-AP0186BHP1-E	230-1-50	198	264	0.150	0.48	0.61	15
	MMD-AP0246BHP1-E	230-1-50	198	264	0.150	0.60	0.75	15
	MMD-AP0276BHP1-E	230-1-50	198	264	0.150	0.60	0.75	15
	MMD-AP0306BHP1-E	230-1-50	198	264	0.150	0.70	0.88	15
	MMD-AP0366BHP1-E	230-1-50	198	264	0.250	1.23	1.54	15
	MMD-AP0486BHP1-E	230-1-50	198	264	0.250	1.41	1.77	15
	MMD-AP0566BHP1-E	230-1-50	198	264	0.250	1.41	1.77	15
	MMD-UP0071BHP-E	230-1-50	198	264	0.150	0.75	0.94	15
	MMD-UP0091BHP-E	230-1-50	198	264	0.150	0.75	0.94	15
	MMD-UP0121BHP-E	230-1-50	198	264	0.150	0.75	0.94	15
	MMD-UP0151BHP-E	230-1-50	198	264	0.150	1.24	1.55	15
	MMD-UP0181BHP-E	230-1-50	198	264	0.150	1.24	1.55	15
	MMD-UP0241BHP-E	230-1-50	198	264	0.150	1.58	1.98	15
	MMD-UP0271BHP-E	230-1-50	198	264	0.150	1.58	1.98	15
	MMD-UP0301BHP-E	230-1-50	198	264	0.150	1.78	2.23	15
	MMD-UP0361BHP-E	230-1-50	198	264	0.250	2.19	2.74	15
	MMD-UP0481BHP-E	230-1-50	198	264	0.250	2.66	3.33	15
	MMD-UP0561BHP-E	230-1-50	198	264	0.250	2.66	3.33	15
Slim Duct Type	MMD-AP0056SPH1-E	230-1-50	198	264	0.060	0.35	0.44	15
	MMD-AP0074SPH1-E	230-1-50	198	264	0.060	0.35	0.44	15
	MMD-AP0094SPH1-E	230-1-50	198	264	0.060	0.35	0.44	15
	MMD-AP0124SPH1-E	230-1-50	198	264	0.060	0.37	0.47	15
	MMD-AP0154SPH1-E	230-1-50	198	264	0.060	0.38	0.48	15
	MMD-AP0184SPH1-E	230-1-50	198	264	0.060	0.47	0.59	15
	MMD-AP0244SPH1-E	230-1-50	198	264	0.120	0.86	1.08	15
	MMD-AP0274SPH1-E	230-1-50	198	264	0.120	0.86	1.08	15
Compact Slim Duct Type	MMD-UP0051SPHY-E	230-1-50	198	264	0.050	0.41	0.51	15
	MMD-UP0071SPHY-E	230-1-50	198	264	0.050	0.46	0.57	15
	MMD-UP0091SPHY-E	230-1-50	198	264	0.050	0.48	0.60	15
	MMD-UP0121SPHY-E	230-1-50	198	264	0.050	0.51	0.63	15
	MMD-UP0151SPHY-E	230-1-50	198	264	0.094	0.54	0.67	15
	MMD-UP0181SPHY-E	230-1-50	198	264	0.094	0.61	0.76	15
	MMD-UP0241SPHY-E	230-1-50	198	264	0.094	0.80	1.00	15
	MMD-UP0271SPHY-E	230-1-50	198	264	0.094	0.85	1.06	15

Type	Model name	Normal Voltage (V-Ph-Hz)	Voltage Range		Fan Motor		Power Supply	
			Min	Max	kW	FLA	MCA	MOCP
Concealed Duct High Static Pressure Type	MMD-AP0186HP1-E	230-1-50	198	264	0.250	1.02	1.28	15
	MMD-AP0246HP1-E	230-1-50	198	264	0.250	1.33	1.66	15
	MMD-AP0276HP1-E	230-1-50	198	264	0.250	1.66	1.66	15
	MMD-AP0366HP1-E	230-1-50	198	264	0.350	2.78	2.78	15
	MMD-AP0486HP1-E	230-1-50	198	264	0.350	2.99	2.99	15
	MMD-AP0566HP1-E	230-1-50	198	264	0.350	2.57	3.22	15
	MMD-AP0726HP1-E	230-1-50	198	264	0.37x3	6.04	7.55	15
	MMD-AP0966HP1-E	230-1-50	198	264	0.37x3	6.35	7.94	15
	MMD-UP0181HP-E	230-1-50	198	264	0.250	1.43	1.79	15
	MMD-UP0241HP-E	230-1-50	198	264	0.250	1.55	1.94	15
	MMD-UP0271HP-E	230-1-50	198	264	0.250	1.86	2.33	15
	MMD-UP0361HP-E	230-1-50	198	264	0.350	2.02	2.53	15
	MMD-UP0481HP-E	230-1-50	198	264	0.350	2.57	3.21	15
	MMD-UP0561HP-E	230-1-50	198	264	0.350	3.25	4.06	15
	MMD-UP0721HP-E	230-1-50	198	264	0.800	4.90	6.13	15
	MMD-UP0961HP-E	230-1-50	198	264	0.800	6.74	8.43	15
Ceiling Type	MMC-AP0158HP-E	230-1-50	198	264	0.094	0.41	0.52	15
	MMC-AP0188HP-E	230-1-50	198	264	0.094	0.42	0.53	15
	MMC-AP0248HP-E	230-1-50	198	264	0.094	0.75	0.93	15
	MMC-AP0278HP-E	230-1-50	198	264	0.094	0.75	0.93	15
	MMC-AP0368HP-E	230-1-50	198	264	0.139	0.89	1.11	15
	MMC-AP0488HP-E	230-1-50	198	264	0.139	0.89	1.11	15
	MMC-AP0568HP-E	230-1-50	198	264	0.139	1.14	1.43	15
	MMC-UP0151HP-E	230-1-50	198	264	0.094	0.42	0.53	15
	MMC-UP0181HP-E	230-1-50	198	264	0.094	0.42	0.53	15
	MMC-UP0241HP-E	230-1-50	198	264	0.094	0.75	0.94	15
	MMC-UP0271HP-E	230-1-50	198	264	0.094	0.75	0.94	15
	MMC-UP0361HP-E	230-1-50	198	264	0.139	0.89	1.11	15
	MMC-UP0481HP-E	230-1-50	198	264	0.139	0.89	1.11	15
	MMC-UP0561HP-E	230-1-50	198	264	0.139	0.89	1.11	15
High Wall Type (3 series)	MMK-AP0073H1	230-1-50	198	264	0.030	0.20	0.22	15
	MMK-AP0093H1	230-1-50	198	264	0.030	0.22	0.24	15
	MMK-AP0123H1	230-1-50	198	264	0.030	0.22	0.24	15
	MMK-AP0153H1	230-1-50	198	264	0.030	0.37	0.40	15
	MMK-AP0183H1	230-1-50	198	264	0.030	0.37	0.40	15
	MMK-AP0243H1	230-1-50	198	264	0.030	0.43	0.47	15

Type	Model name	Normal Voltage (V-Ph-Hz)	Voltage Range		Fan Motor		Power Supply	
			Min	Max	kW	FLA	MCA	MOCP
High Wall Type	MMK-AP0057HP-E	230-1-50	198	264	0.030	0.16	0.20	15
	MMK-AP0077HP-E	230-1-50	198	264	0.030	0.17	0.21	15
	MMK-AP0097HP-E	230-1-50	198	264	0.030	0.18	0.23	15
	MMK-AP0127HP-E	230-1-50	198	264	0.030	0.20	0.25	15
	MMK-AP0157HP-E	230-1-50	198	264	0.420	0.29	0.36	15
	MMK-AP0187HP-E	230-1-50	198	264	0.420	0.32	0.40	15
	MMK-AP0247HP-E	230-1-50	198	264	0.420	0.46	0.58	15
	MMK-UP0051HP-E	230-1-50	198	264	0.030	0.17	0.21	15
	MMK-UP0071HP-E	230-1-50	198	264	0.030	0.17	0.21	15
	MMK-UP0091HP-E	230-1-50	198	264	0.030	0.18	0.23	15
	MMK-UP0121HP-E	230-1-50	198	264	0.030	0.20	0.25	15
	MMK-UP0151HP-E	230-1-50	198	264	0.030	0.30	0.38	15
	MMK-UP0181HP-E	230-1-50	198	264	0.030	0.33	0.41	15
	MMK-UP0241HP-E	230-1-50	198	264	0.030	0.48	0.60	15
Floor Standing Cabinet Type	MML-AP0074H1-E	230-1-50	198	264	0.045	0.30	0.37	15
	MML-AP0094H1-E	230-1-50	198	264	0.045	0.30	0.37	15
	MML-AP0124H1-E	230-1-50	198	264	0.045	0.49	0.62	15
	MML-AP0154H1-E	230-1-50	198	264	0.045	0.49	0.62	15
	MML-AP0184H1-E	230-1-50	198	264	0.070	0.54	0.68	15
	MML-AP0244H1-E	230-1-50	198	264	0.070	0.54	0.68	15
	MML-UP0071H-E	230-1-50	198	264	0.045	0.30	0.37	15
	MML-UP0091H-E	230-1-50	198	264	0.045	0.30	0.37	15
	MML-UP0121H-E	230-1-50	198	264	0.045	0.49	0.62	15
	MML-UP0151H-E	230-1-50	198	264	0.045	0.49	0.62	15
	MML-UP0181H-E	230-1-50	198	264	0.070	0.54	0.68	15
	MML-UP0241H-E	230-1-50	198	264	0.070	0.54	0.68	15
Floor Standing Concealed Type	MML-AP0074BH1-E	230-1-50	198	264	0.019	0.29	0.36	15
	MML-AP0094BH1-E	230-1-50	198	264	0.019	0.29	0.36	15
	MML-AP0124BH1-E	230-1-50	198	264	0.019	0.29	0.36	15
	MML-AP0154BH1-E	230-1-50	198	264	0.070	0.52	0.65	15
	MML-AP0184BH1-E	230-1-50	198	264	0.070	0.52	0.65	15
	MML-AP0244BH1-E	230-1-50	198	264	0.070	0.53	0.66	15
	MML-UP0071BH-E	230-1-50	198	264	0.019	0.29	0.36	15
	MML-UP0091BH-E	230-1-50	198	264	0.019	0.29	0.36	15
	MML-UP0121BH-E	230-1-50	198	264	0.019	0.29	0.36	15
	MML-UP0151BH-E	230-1-50	198	264	0.070	0.52	0.65	15
	MML-UP0181BH-E	230-1-50	198	264	0.070	0.52	0.65	15
	MML-UP0241BH-E	230-1-50	198	264	0.070	0.53	0.66	15

Type	Model name	Normal Voltage (V-Ph-Hz)	Voltage Range		Fan Motor		Power Supply	
			Min	Max	kW	FLA	MCA	MOCP
Floor Standing Type	MMF-AP0156H1-E	230-1-50	198	264	0.062	0.44	0.55	15
	MMF-AP0186H1-E	230-1-50	198	264	0.062	0.44	0.55	15
	MMF-AP0246H1-E	230-1-50	198	264	0.062	0.69	0.86	15
	MMF-AP0276H1-E	230-1-50	198	264	0.062	0.69	0.86	15
	MMF-AP0366H1-E	230-1-50	198	264	0.109	1.04	1.29	15
	MMF-AP0486H1-E	230-1-50	198	264	0.109	1.27	1.58	15
	MMF-AP0566H1-E	230-1-50	198	264	0.109	1.27	1.58	15
	MMF-UP0151H-E	230-1-50	198	264	0.062	0.42	0.53	15
	MMF-UP0181H-E	230-1-50	198	264	0.062	0.42	0.53	15
	MMF-UP0241H-E	230-1-50	198	264	0.062	0.63	0.79	15
	MMF-UP0271H-E	230-1-50	198	264	0.062	0.63	0.79	15
	MMF-UP0361H-E	230-1-50	198	264	0.109	0.94	1.18	15
	MMF-UP0481H-E	230-1-50	198	264	0.109	1.12	1.40	15
	MMF-UP0561H-E	230-1-50	198	264	0.109	1.12	1.40	15
Console Type	MML-AP0074NH1-E	230-1-50	198	264	0.041	0.21	0.26	15
	MML-AP0094NH1-E	230-1-50	198	264	0.041	0.21	0.26	15
	MML-AP0124NH1-E	230-1-50	198	264	0.041	0.25	0.31	15
	MML-AP0154NH1-E	230-1-50	198	264	0.041	0.32	0.40	15
	MML-AP0184NH1-E	230-1-50	198	264	0.041	0.46	0.58	15
	MML-UP0071NHP-E	230-1-50	198	264	0.041	0.21	0.26	15
	MML-UP0091NHP-E	230-1-50	198	264	0.041	0.21	0.26	15
	MML-UP0121NHP-E	230-1-50	198	264	0.041	0.25	0.32	15
	MML-UP0151NHP-E	230-1-50	198	264	0.041	0.32	0.40	15
	MML-UP0181NHP-E	230-1-50	198	264	0.041	0.46	0.58	15
Hot Water Module	MMW-AP0271LQ-E	230-1-50	198	264	-	-	0.90	15
	MMW-AP0561LQ-E	230-1-50	198	264	-	-	0.90	15
	MMW-UP0271LQ-E	230-1-50	198	264	-	-	0.90	15
	MMW-UP0561LQ-E	230-1-50	198	264	-	-	0.90	15

MCA : Minimum Circuit Amps FLA : Full Load Amps
MOCP : Maximum Overcurrent Protection (Amps) kW : Fan motor Rated Output (kW)

• Wiring size

Must be independent from the outdoor unit power supply

Item / Model	Power supply wiring			
	Wire size			
All models of indoor units	2.0 mm² (AWG#14)	Max. 20 m	3.5 mm² (AWG#12)	Max. 50 m

NOTE:

The above connecting lengths stated in the table, indicate the length from the isolator to the outdoor unit. When the power supply of the indoor units are connected in parallel, it is assumed that no more than a 2 % voltage drop will occur. If the connecting length is to exceed the stated lengths, select a suitable wire in accordance with the local wiring standards.

4-5. Design of control wiring

4-5-1. Summary of control wiring

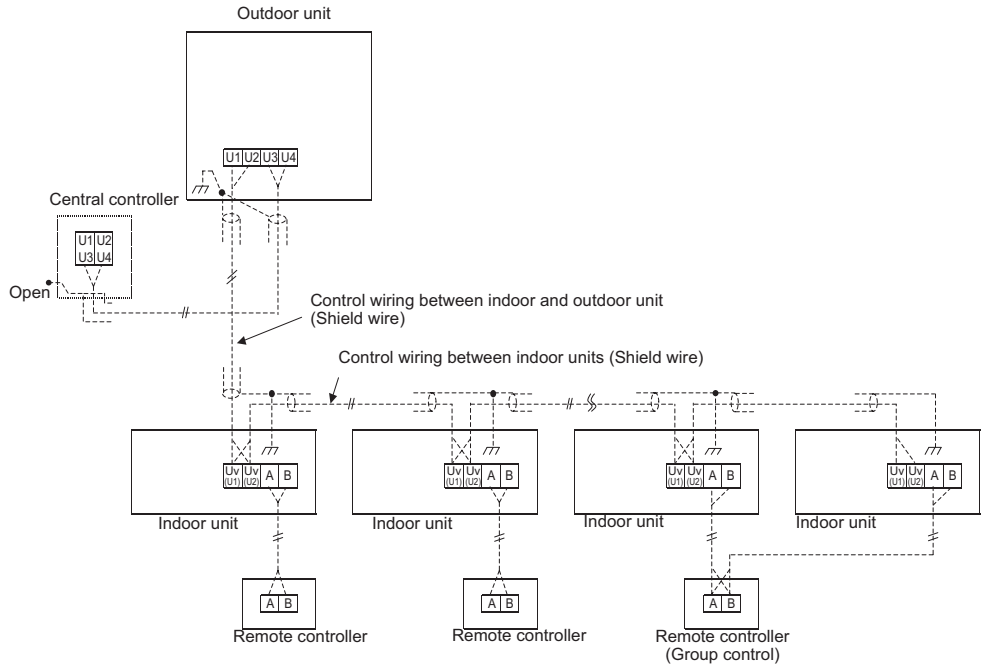

Control wiring and central control wiring use 2-core non-polarity wires.
Use 2-core shield wires to prevent noise trouble.
In this case, for the system grounding, close (connect) the end of shield wires, and isolate the end of terminal.
Use 2-core non-polarity wire for remote controller. (A, B terminals)
Use 2-core non-polarity wire for wiring of group control. (A, B terminals)

4-5-2. Restriction of control wiring

Keep the rule of below tables about size and length of Control wiring.

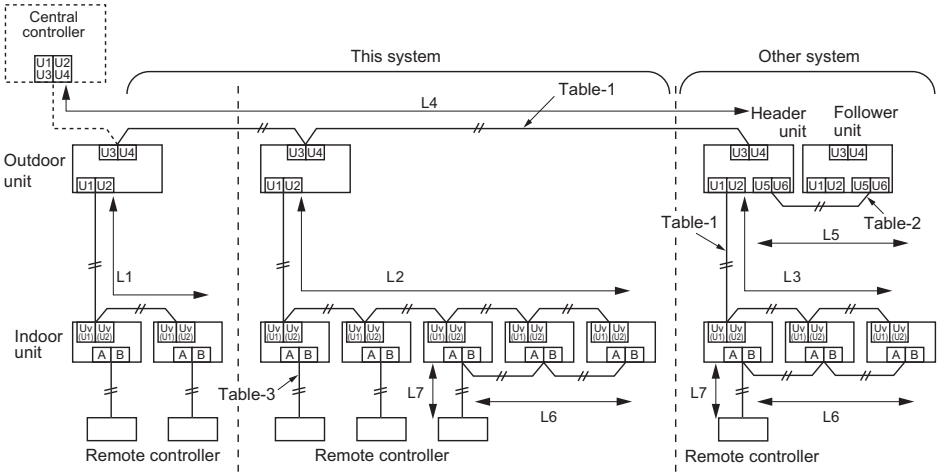

Table-1 Control wiring between indoor and outdoor units (L1, L2, L3), Central control wiring (L4)

Wiring	2-core, non-polarity
Type	Shield wire
Size/Length*1	1.25 mm^2: Up to 1000 m 2.0 mm^2: Up to 2000 m

(*1): Total of control wiring length for all refrigerant circuits (L1 + L2 + L3 + L4)

Table-2 Control wiring between outdoor units (L5) (Other system)

Wiring	2-core, non-polarity
Type	Shield wire
Size/Length	1.25 mm^2 to 2.0 mm^2 Up to 100 m (L5)

Table-3 Remote controller wiring (L6, L7)

Wire	2-core
Size	0.5 mm^2 to 2.0 mm^2
Length	Up to 500 m (L6 + L7) Up to 400 m with of wireless remote controller in group control. Up to 200 m total length of control wiring between indoor units (L6)

4-5-3. Group control through a remote controller

Group control of multiple indoor units (8 units) through a single remote controller

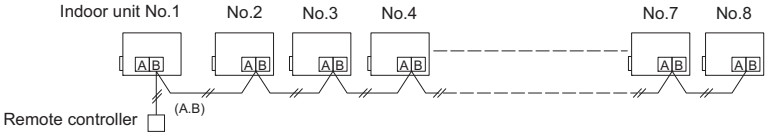

5-1. Specifications

Outdoor unit model name					MCY-MHP0806HS8-E	MCY-MHP1006HS8-E
Outdoor unit type					Inverter	Inverter
Capacity code				HP	8	10
Cooling Capacity			(*1)	kW	22.4	28.0
Heating Capacity			(*1)	kW	22.4	28.0
Heating Capacity Max				kW	25.0	31.5
Electrical characteristics (Nominal) (*1)	Power supply			(*2)	3phase 50Hz 380/400/415V	3phase 50Hz 380/400/415V
	Cooling	Running current		A	11.1/10.6/10.2	15.3/14.5/14.0
		Power consumption		kW	6.67	9.34
		Power factor		%	91	93
		EER			3.36	3.00
		SEER	(Erp lot6/21)		8.09	7.40
	Heating	Running current		A	8.7/8.2/7.9	11.4/10.9/10.5
		Power consumption		kW	5.20	7.00
		Power factor		%	91	93
		COP			4.31	4.00
		SCOP	(Erp lot6/21)		4.50	4.38
	Starting Current			A	Soft start	Soft start
Dimension	Unit	Height		mm	1740	1740
		Width		mm	990	990
		Depth		mm	390	390
	Packing	Height		mm	1860	1860
		Width		mm	1130	1130
		Depth		mm	522	522
Total Weight	Unit			kg	147	147
	Packed unit			kg	166	166
Appearance (Color)					Silky shade (Munsell 1Y8.5/0.5)	Silky shade (Munsell 1Y8.5/0.5)
Compressor	Type				Hermetic twin rotary compressor	Hermetic twin rotary compressor
	Motor output			kW	6.60	6.60
Fan unit	Fan				Propeller fan (Quantity 2)	Propeller fan (Quantity 2)
	Motor output			W	100+100	100+100
	Air volume			m^3/h	8,460	8,820
Heat exchanger					Finned tube	Finned tube
Refrigerant R410A (Charged refrigerant amount (kg))				(*3)	4.4	4.4
High-pressure switch				MPa	ON:4.15, OFF:3.20	ON:4.15, OFF:3.20
Protective devices					Discharge temp. sensor / Suction temp. sensor / High-pressure sensor	Discharge temp. sensor / Suction temp. sensor / High-pressure sensor
					Low-pressure sensor / P.C. board fuse	Low-pressure sensor / P.C. board fuse
Electrical specifications	Unit	MCA	(*4)	A	17.0	20.0
		MOCP	(*5)	A	20.0	25.0
Refrigerant piping	Connecting port diameter	Gas side (main pipe)		mm	19.1	19.1
		Liquid side (main pipe)		mm	9.5	9.5
	Connecting method	Gas side			Flare	Flare
		Liquid side			Flare	Flare
	Connecting piping diameter	Gas side		mm	19.1	22.2 (*6)
		Liquid side		mm	9.5 (*7)	9.5 (*7)
Total extension of piping				m	300	300
Max. No. of connected indoor units					12	16 (*8)
Connectable FCU diversity					80 % - 130 %	80 % - 130 %
Sound pressure level			Cooling	dB(A)	58	59
			Heating	dB(A)	59	60
	Night operation (*9) (Sound reduction) control		Cooling	dB(A)	50	50
			Heating	dB(A)	50	50
Sound power level			Cooling	dB(A)	75	77
			Heating	dB(A)	75	77
	Night operation (*9) (Sound reduction) control		Cooling	dB(A)	67	67
			Heating	dB(A)	67	67
Operation temperature range		Cooling		CDB	-5 to 46	-5 to 46
		Heating		CWB	-20 to 15	-20 to 15

(*1) Rated conditions Cooling : Indoor 27 degC Dry Bulb /19 degC Wet Bulb, Outdoor 35 degC Dry Bulb.
Heating : Indoor 20 degC Dry Bulb, Outdoor 7 degC Dry Bulb / 6 degC WetBulb.
The standard pipe means that equivalent piping length of 7.5 m and standard 0 m piping height difference.
(*2) The source voltage must not fluctuate more than ±10 %.
(*3) The amount dose not consider extra piping length.
Refrigerant must be added on site in accordance with the actual piping length.
(*4) Select wire size base on the larger value of MCA.
(*5) MOCP : Maximum overcurrent protection (Amps)
(*6) Attach a socket of 19.1 - 22.2 mm to the ball valve. For its details, refer to Installation Manual.
(*7) Depending on the installation conditions, the liquid pipe dia. needs to be increased. For its details, refer to Installation Manual.
(*8) When the No. of connecting indoor units exceeds 12, maximum total capacity code of indoor units will be 11.
(*9) Need to prepare for optional control P.C. board.

5-2. Dimensional drawing

MCY-MHP0806HS8-E, MCY-MHP1006HS8-E

*	Diameter of connecting port		Diameter of connecting pipe	
	Liquid side	Gas side	Liquid side	Gas side
MCY-MHP0806HS8-E	φ9.52	φ19.05	φ9.52	φ19.05
MCY-MHP1006HS8-E	φ9.52	φ19.05	φ9.52	φ22.22
MCY-MHP0806HS8-TR	φ9.52	φ19.05	φ9.52	φ19.05
MCY-MHP1006HS8-TR	φ9.52	φ19.05	φ9.52	φ22.22

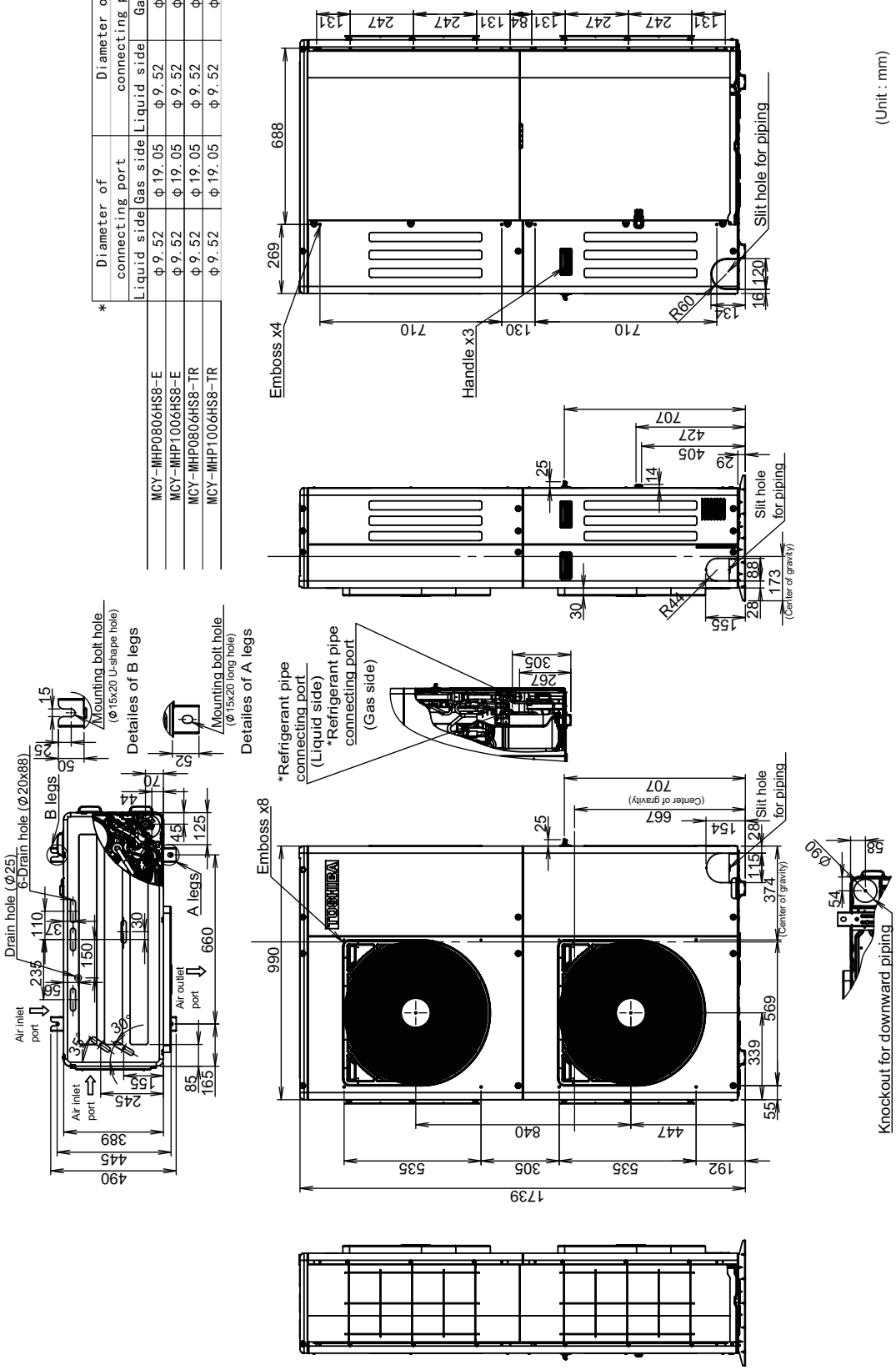

5-3. Branch header / branch joint

- **Branch header**
  RBM-HY1043E, HY1083E

Gas side

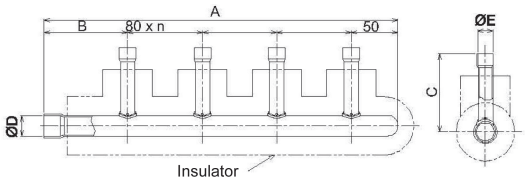

Liquid side

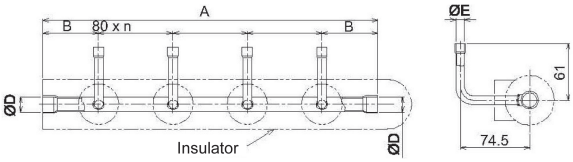

Model		A	B	C	øD	øE	n	Accessory socket Qty
RBM-HY1043E	Gas side	380	90	83.6	22.2	15.9	3	⑥ x 4, ⑨ x 4, ⑭ x 1, ⑱ x 1, ⑦⓪ x 1
	Liquid side	360	60	-	15.9	9.5	3	① x 4, ⑥ x 1, ⑨ x 1
RBM-HY1083E	Gas side	700	90	83.6	22.2	15.9	7	⑥ x 8, ⑨ x 8, ⑭ x 1, ⑱ x 1, ⑦⓪ x 1
	Liquid side	680	60	-	15.9	9.5	7	① x 8, ⑥ x 1, ⑨ x 1

- **Y-shape branch joint**
  RBM-BY55E, BY105E

Gas side

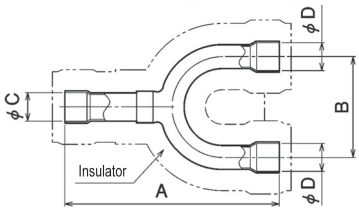

Liquid side

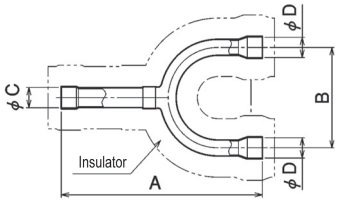

Model		A	B	øC	øD	Accessory socket Qty
BY55E	Gas side	160	80	15.9	15.9	⑨ x 1, ⑤① x 2, ⑨① x 2
	Liquid side	130	70	9.5	9.5	① x 2
BY105E	Gas side	170	80	22.2	22.2	⑭ x 2, ⑦⓪ x 2, ⑨① x 1
	Liquid side	160	80	15.9	15.9	⑨ x 1, ⑨① x 1, ⑨② x 1

- **Accessory socket**

①

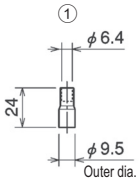

③⑥⑨⑤①

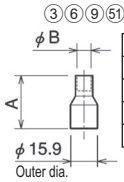

	A	øB
③	35	6.4
⑥	32	9.5
⑨	28	12.7
⑤①	37.5	19.1

⑭⑱⑥⑨⑦⓪⑧⑤⑧⑥

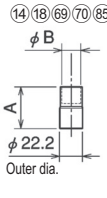

	A	øB
⑭	40	15.9
⑱	40	19.1
⑥⑨	48	25.4
⑦⓪	54	28.6
⑧⑤	41	12.7
⑧⑥	44	9.5

⑨①⑨④⑨⑤⑨⑥⑨⑦

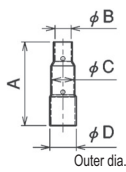

	A	øB	øC	øD
⑨①	58	9.5	12.7	15.9
⑨④	71	15.9	19.1	22.2
⑨⑤	80	22.2	25.4	28.6
⑨⑥	87	25.4	28.6	31.8
⑨⑦	95	28.6	31.8	38.1

⑨②

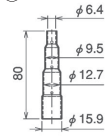

Closure tube

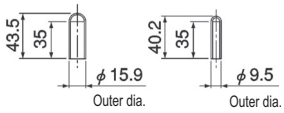

5-4. Refrigerant cycle diagram

MCY-MHP0806HS8-E, MCY-MHP1006HS8-E

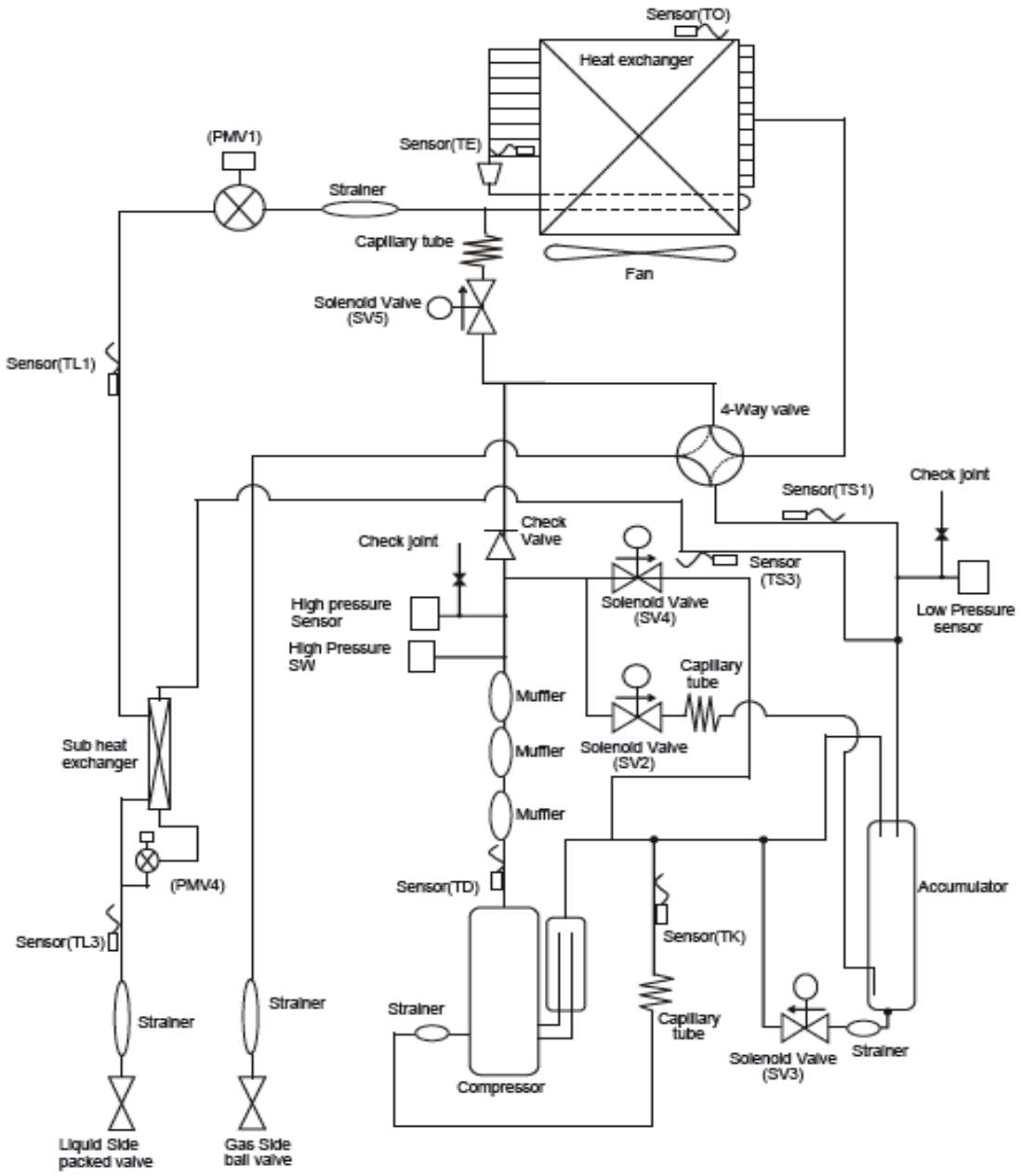

5-5. Wiring diagram

MCY-MHP0806HS8-E, MCY-MHP1006HS8-E

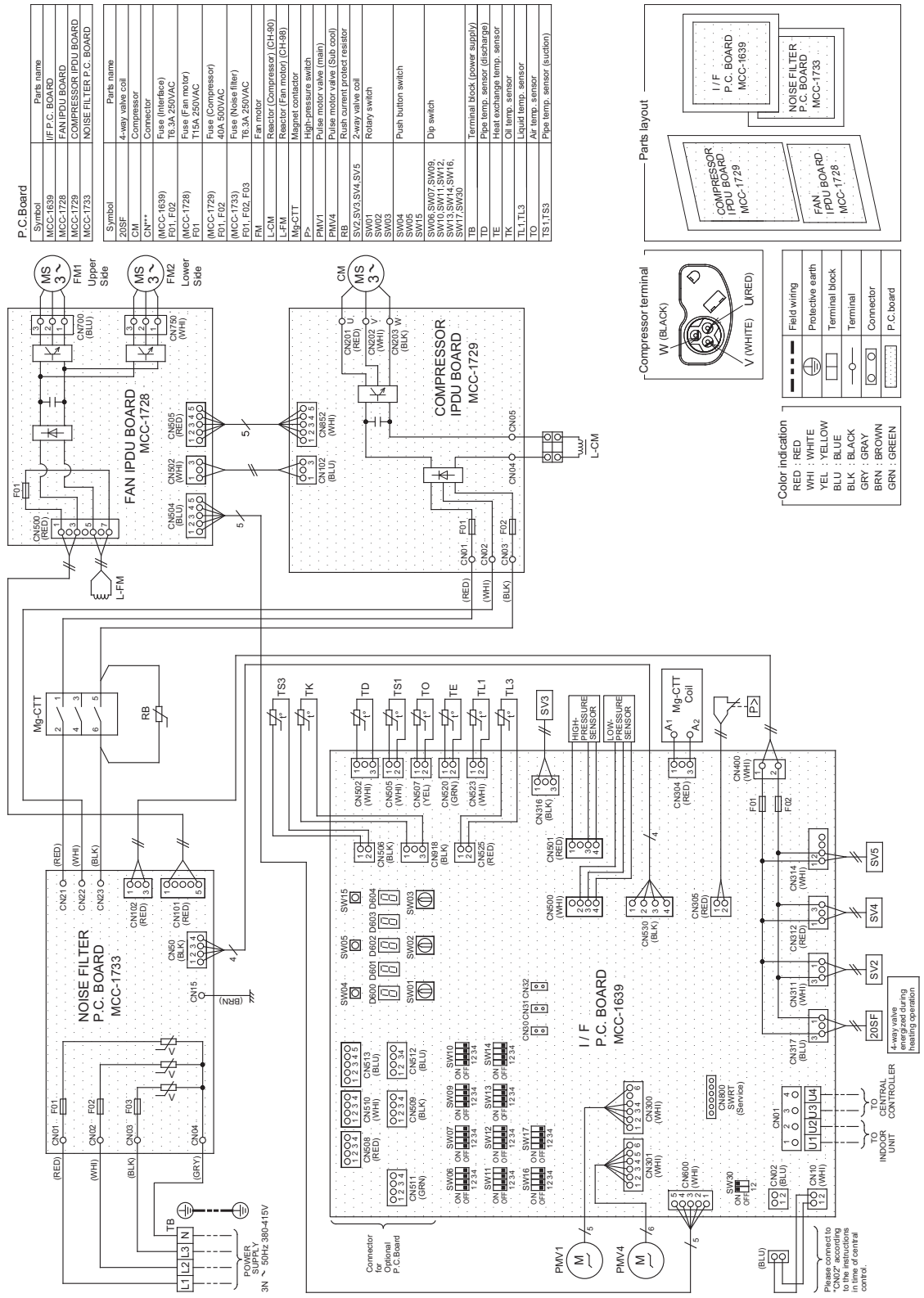

5-6. Connecting diagram

MCY-MHP0806HS8-E, MCY-MHP1006HS8-E

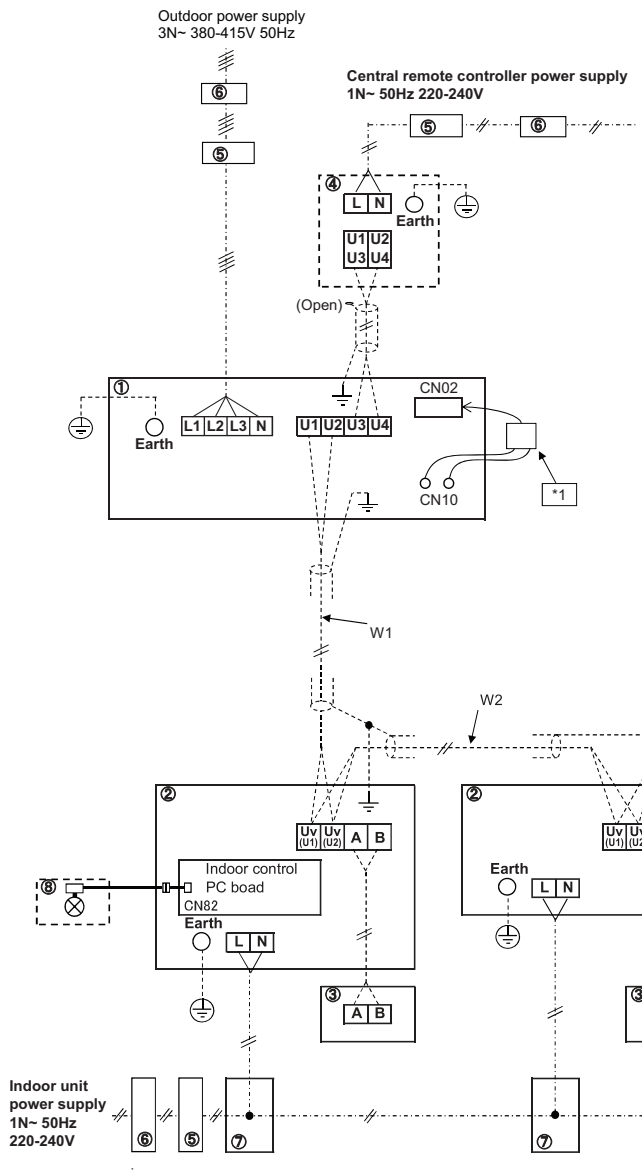

(1)	Outdoor unit
(2)	Indoor unit
(3)	Remote controller
(4)	Central remote controller (option)
(5)	Main switch (Fuse)
(6)	Circuit breaker (Earth leakage breaker)
(7)	Pull box
(8)	PMV Kit (option)

W1	Control wiring between indoor and outdoor units.
W2	Control wiring between indoor units.

(Note)

1. When perform a central control, connect the wire of CN10 in CN02. (Factory default : No connection)
2. Connection of shield wire must be connected. (Connected to all connecting sections in each Indoor unit)
3. Group control
4. Select the power supply wiring and fuse of outdoor/indoor units according to each models specification. Perform wiring of power supply complying with the rules and regulations of the local electric company.
5. Fro the control wires connecting indoor units, outdoor units, and between indoor and outdoor units, use 2-core and non-polarity shield wires.
6. As for details, see the wiring diagram of indoor/outdoor unit.

5-7. Optional printed circuit board (PCB) of outdoor unit

Model name	Appearance	Function
TCB-PCDM4E	 Size : 71 x 85 (mm) **Application** 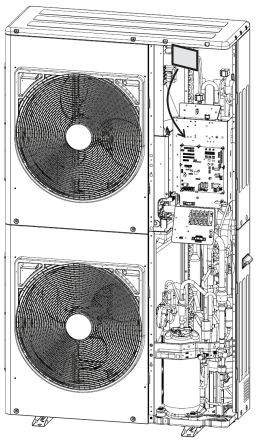 * Installation the optional PCB in the interface board of the outdoor unit.	**Power peak-cut Control** **Standard Specifications** (Wiring example) 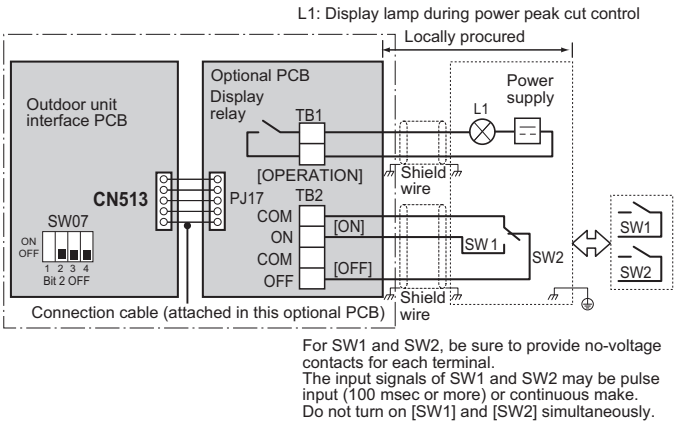 For SW1 and SW2, be sure to provide no-voltage contacts for each terminal. The input signals of SW1 and SW2 may be pulse input (100 msec or more) or continuous make. Do not turn on [SW1] and [SW2] simultaneously. **<SW07 (bit 2) OFF [2-stage switching]>** **Enhanced Specifications** (Wiring example) 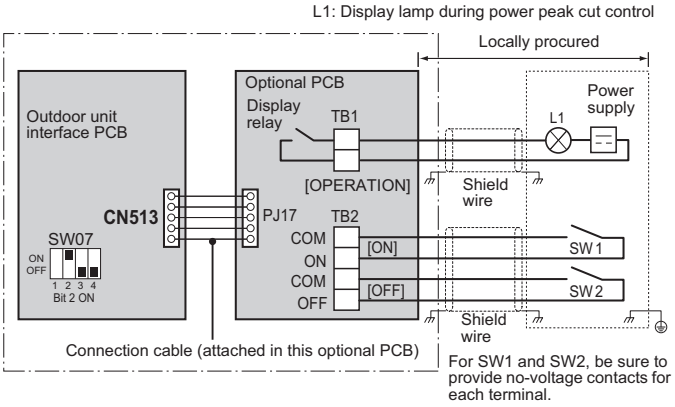 For SW1 and SW2, be sure to provide no-voltage contacts for each terminal. **<SW07 (bit 2) ON [4-stage switching]>**

<SW07 (bit 2) OFF [2-stage switching]>

Input		SW07 (bit 1)		Display relay (L1)
SW1	SW2	Bit 1 OFF	Bit 1 ON	
OFF	ON	100 % (normal operation)	100 % (normal operation)	OFF
ON	OFF	0 % (forced stop)	Approx. 60 % (upper limit regulated)	ON

<SW07 (bit 2) ON [4-stage switching]>

Input		SW07 (bit 1)		Display relay (L1)
SW1	SW2	Bit 1 OFF	Bit 1 ON	
OFF	OFF	100 % (normal operation)	100 % (normal operation)	OFF
ON	OFF	Approx. 80 % (upper limit regulated)	Approx. 85 % (upper limit regulated)	ON
OFF	ON	Approx. 60 % (upper limit regulated)	Approx. 75 % (upper limit regulated)	ON
ON	ON	0 % (forced stop)	Approx. 60 % (upper limit regulated)	ON

Model name	Appearance	Function
TCB-PCMO4E	 Size : 55.5 x 60 (mm) **Application** 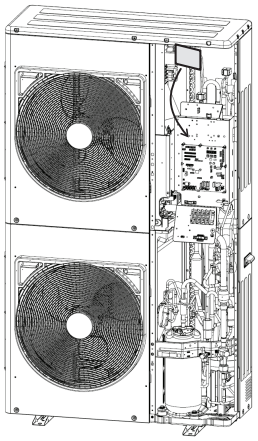 * Installation the optional PCB in the interface board of the outdoor unit.	**[1] External master ON/OFF control** ▼ Function By connecting the cable (attached in this optional PCB) to the interface PC board on an outdoor unit, all indoor units connected to the outdoor unit enable to operate simultaneously. 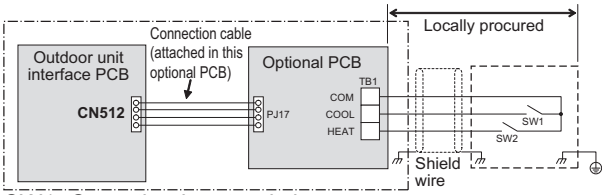 SW1: Operation input switch SW2: Stop input switch **Terminal** / **Input signal** / **Operation** COOL (SW1): ON / OFF — All indoor units operate together HEAT (SW2): ON / OFF — All indoor units stop together Provide no-voltage pulse contacts for each terminal. Hold the ON state for at least 100 msec. Do not turn SW1 and SW2 ON simultaneously. **[2] Night time operation (sound reduction) control** ▼ Function As the cable (attached in this optional PCB) is connected to the “Interface PCB” on an outdoor unit, both compressor speed and fan speed are restricted while the signal of the night operation control is input. It makes the noise reduction during the night time operation. 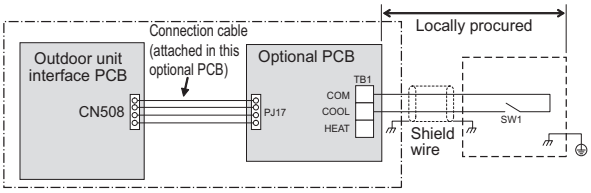 SW1: Night time signal switch **Terminal** / **Input signal** / **Operation** COOL (SW1): ON / OFF — Night time control COOL (SW1): ON / OFF — Normal operation Each terminal should be connected to dry contact. The input signal is recognized during its rising/falling phase. (After reaching the top/bottom of the rising/falling edge, the signal must remain there for at least 100 ms.)

Model name	Appearance	Function
TCB-PCMO4E	Size : 55.5 x 60 (mm)	▼ Sound reduction and approximation capacity (reference)

Outdoor unit (base unit)	During low-noise mode dB(A)		Capacity	
	Cooling	Heating	Cooling	Heating
Model 0806*	50	50	approx. 80 %	approx. 75 %
Model 1006*	50	50	approx. 65 %	approx. 60 %

* Position of noise measuring device: 1 m from the front face of the set and 1.5 m above ground (anechoic sound)

Application

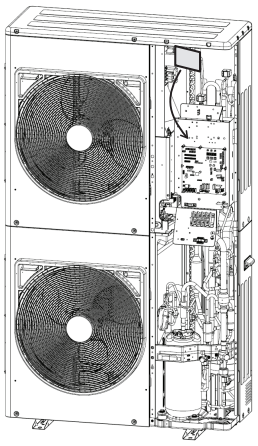

* Installation the optional PCB in the interface board of the outdoor unit.

[3] Operation mode selection control

▼ Function

The heating/cooling mode of the system can be selected by connecting to the interface PCB of outdoor units.

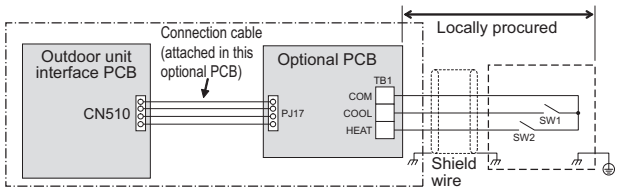

SW1: Cooling mode specified input switch
SW2: Heating mode specified input switch

Input Signal		Operation: Selected operation mode
Cooling (SW1)	Heating (SW2)	
ON	OFF	Cooling operation only
OFF	ON	Heating operation only
OFF	OFF	Normal operation

Each terminal should be connected to dry contact.

Indoor unit operation intervention function

The statuses of indoor units operating in a mode different from the selected operation mode can be changed by changing the status of a jumper wire (J01) provided on the interface P.C. board of outdoor unit.

Jumper wire	Description of intervention
J01 connected (factory default)	All indoor units operating in a mode different from the selected operation mode (prohibited-mode indoor units) become non-priority units (thermostat OFF). The display "⏻ (operation ready)" appears on the remote controller of prohibited-mode indoor units.
J01 cut	The selected operation mode is imposed on all indoor units operating in a different mode.

Mode selected at P.C. board	Remote controller operation / display	
Normal	All modes (COOL, DRY, HEAT and FAN) available	
COOL	Only COOL, DRY and FAN available	"operation mode control" (turned on during remote controller operation)
HEAT	Only HEAT and FAN available	

Model name	Appearance	Function
TCB-PCIN4E	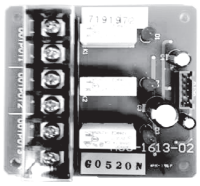 Size : 73 x 79 (mm) **Application** 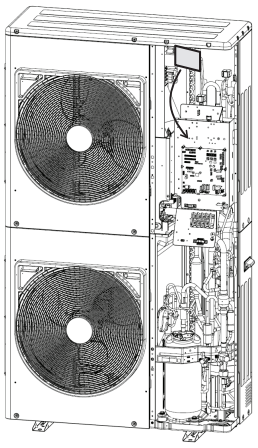 * Installation the optional PCB in the interface board of the outdoor unit.	**Error / Operation Output** ▼ Function The operation error output PCB can indicate operation and error states by connecting to the interface PCB of outdoor units. ▼ Operation Operation output: The operation indicator is on while any indoor unit in the system is operating. Error output: The error indicator is on when an error is occurred on even one of the indoor or outdoor units in the system. Wiring example 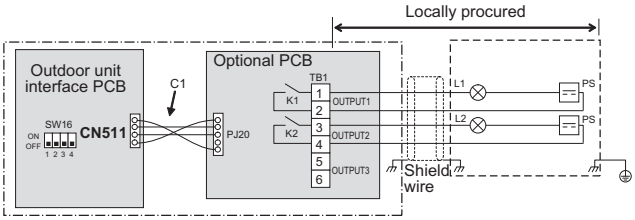 C1 — Attached connection cable 1 (4wires) CN511 — Connector on interface side (green) K1, K2 — Relays L1 — Error indication Lamp L2 — Operation indication Lamp OUTPUT1 — Error output OUTPUT2 — Operation output PJ20 — Connector on optional PCB side PS — Power supply unit TB1 — Terminal block * [OUTPUT3] is displayed when power is turned on.

[PCB Installation Position]

There are holes on the metal of interface PCB, and the optional PCBs are installed.
Two kinds of the optional PCBs are able to install on it.

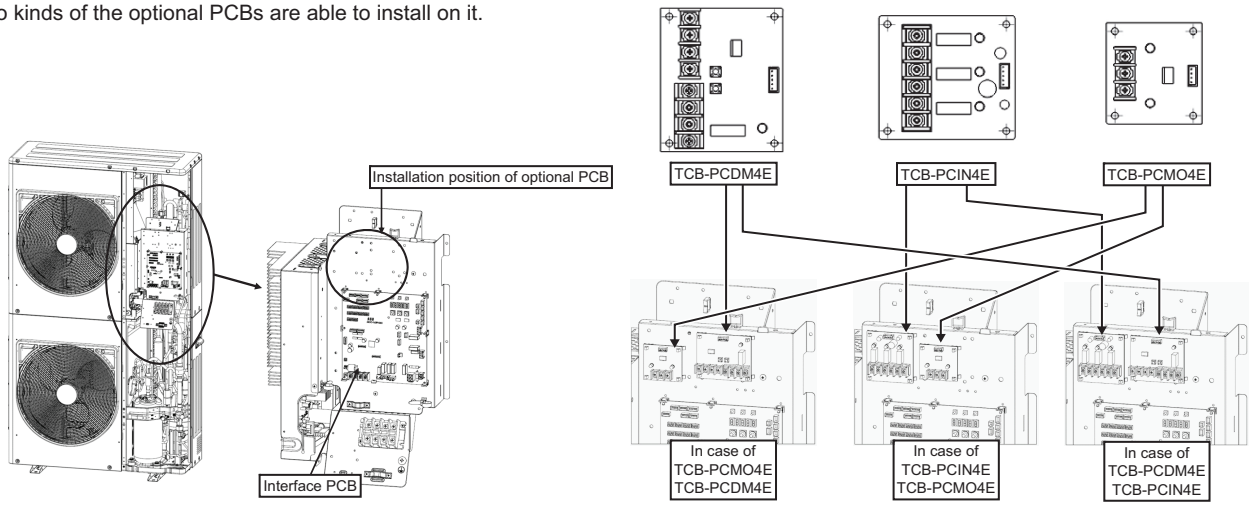

Dimensions of PCB

TCB-PCDM4E

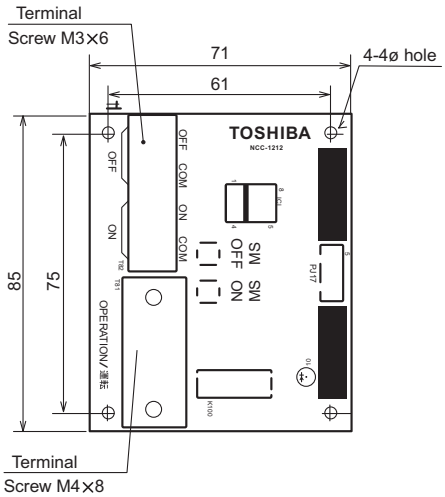

TCB-PCMO4E

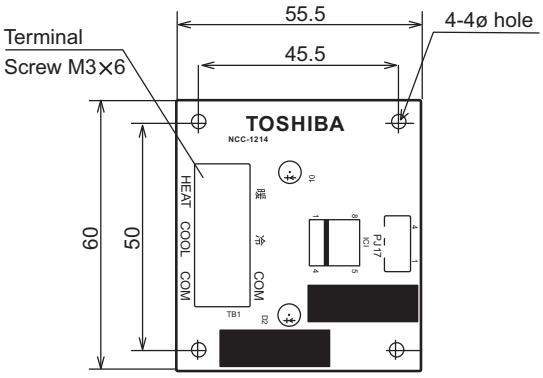

TCB-PCIN4E

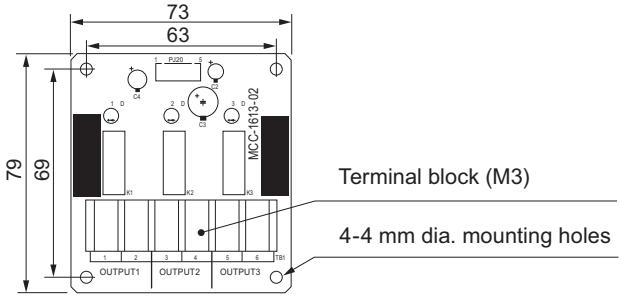

5-8. Part load performance

MCY-MHP0806HS8* (8HP, 22.4 kW system)

Cooling		Compressor + Outdoor Fan Power consumption (kW)															
Outdoor Unit Dry-Bulb (°C)	Outdoor Unit 100 % Cooling Capacity (kW)	100 %		90 %		80 %		70 %		60 %		50 %		40 %		30 %	
		TC (kW)	PI (kW)	TC (kW)	PI (kW)	TC (kW)	PI (kW)	TC (kW)	PI (kW)	TC (kW)	PI (kW)	TC (kW)	PI (kW)	TC (kW)	PI (kW)	TC (kW)	PI (kW)
40	20.2	20.2	7.16	18.2	5.86	16.1	4.71	14.1	3.70	12.1	2.84	10.1	2.12	8.1	1.55	6.1	1.11
39	20.7	20.7	7.06	18.6	5.78	16.6	4.65	14.5	3.65	12.4	2.80	10.4	2.09	8.3	1.52	6.2	1.10
37	21.6	21.6	6.86	19.5	5.62	17.3	4.52	15.1	3.55	13.0	2.72	10.8	2.03	8.7	1.48	6.5	1.07
35	22.4	22.4	6.67	20.2	5.46	17.9	4.39	15.7	3.45	13.4	2.64	11.2	1.97	9.0	1.44	6.7	1.04
33	22.4	22.4	6.35	20.2	5.20	17.9	4.18	15.7	3.29	13.4	2.52	11.2	1.88	9.0	1.37	6.7	0.99
31	22.4	22.4	6.04	20.2	4.95	17.9	3.98	15.7	3.12	13.4	2.40	11.2	1.79	9.0	1.30	6.7	0.94
30	22.4	22.4	5.89	20.2	4.82	17.9	3.87	15.7	3.04	13.4	2.33	11.2	1.74	9.0	1.27	6.7	0.92
29	22.4	22.4	5.73	20.2	4.69	17.9	3.77	15.7	2.96	13.4	2.27	11.2	1.70	9.0	1.24	6.7	0.89
27	22.4	22.4	5.42	20.2	4.44	17.9	3.56	15.7	2.80	13.4	2.15	11.2	1.60	9.0	1.17	6.7	0.84
25	22.4	22.4	5.11	20.2	4.18	17.9	3.36	15.7	2.64	13.4	2.02	11.2	1.51	9.0	1.10	6.7	0.79
23	22.4	22.4	4.79	20.2	3.92	17.9	3.15	15.7	2.48	13.4	1.90	11.2	1.42	9.0	1.03	6.7	0.75
21	22.4	22.4	4.48	20.2	3.67	17.9	2.95	15.7	2.32	13.4	1.78	11.2	1.33	9.0	0.97	6.7	0.70
20	22.4	22.4	4.32	20.2	3.54	17.9	2.85	15.7	2.24	13.4	1.71	11.2	1.28	9.0	0.93	6.7	0.67
19	22.4	22.4	4.17	20.2	3.41	17.9	2.74	15.7	2.16	13.4	1.65	11.2	1.23	9.0	0.90	6.7	0.65
17	22.4	22.4	3.86	20.2	3.16	17.9	2.54	15.7	1.99	13.4	1.53	11.2	1.14	9.0	0.83	6.7	0.60
15	22.4	22.4	3.54	20.2	2.90	17.9	2.33	15.7	1.83	13.4	1.41	11.2	1.05	9.0	0.76	6.7	0.55

TC : Total Capacity PI : Power Input
Indoor air temperature conditions : 27.0 °C dry-bulb / 19.0 °C wet bulb

Heating			Compressor + Outdoor Fan Power consumption (kW)															
Outdoor Unit		Outdoor Unit 100 % Heating Capacity (kW)	100 %		90 %		80 %		70 %		60 %		50 %		40 %		30 %	
Dry-Bulb (°C)	Wet-Bulb (°C)		TC (kW)	PI (kW)	TC (kW)	PI (kW)	TC (kW)	PI (kW)	TC (kW)	PI (kW)	TC (kW)	PI (kW)	TC (kW)	PI (kW)	TC (kW)	PI (kW)	TC (kW)	PI (kW)
15.0	13.7	22.4	22.4	4.08	20.2	3.45	17.9	2.88	15.7	2.35	13.4	1.87	11.2	1.45	9.0	1.08	6.7	0.76
13.0	11.8	22.4	22.4	4.36	20.2	3.69	17.9	3.07	15.7	2.51	13.4	2.00	11.2	1.55	9.0	1.15	6.7	0.81
11.0	9.8	22.4	22.4	4.64	20.2	3.93	17.9	3.27	15.7	2.67	13.4	2.13	11.2	1.65	9.0	1.23	6.7	0.86
9.0	7.9	22.4	22.4	4.92	20.2	4.16	17.9	3.47	15.7	2.83	13.4	2.26	11.2	1.75	9.0	1.30	6.7	0.91
7.0	6.0	22.4	22.4	5.20	20.2	4.40	17.9	3.66	15.7	2.99	13.4	2.39	11.2	1.85	9.0	1.37	6.7	0.96
5.0	4.1	21.5	21.5	5.12	19.4	4.33	17.2	3.60	15.1	2.94	12.9	2.35	10.8	1.82	8.6	1.35	6.5	0.95
3.0	2.2	20.6	20.6	5.03	18.6	4.26	16.5	3.54	14.4	2.89	12.4	2.31	10.3	1.79	8.3	1.33	6.2	0.93
0.0	-0.7	19.3	19.3	4.90	17.4	4.15	15.5	3.45	13.5	2.82	11.6	2.25	9.7	1.74	7.7	1.29	5.8	0.91
-3.0	-3.7	18.0	18.0	4.78	16.2	4.04	14.4	3.36	12.6	2.75	10.8	2.19	9.0	1.70	7.2	1.26	5.4	0.89
-5.0	-5.6	17.1	17.1	4.69	15.4	3.97	13.7	3.30	12.0	2.70	10.3	2.15	8.6	1.67	6.8	1.24	5.1	0.87
-7.0	-7.6	16.2	16.2	4.61	14.6	3.90	13.0	3.24	11.4	2.65	9.7	2.11	8.1	1.64	6.5	1.22	4.9	0.85
-10.0	-10.5	14.9	14.9	4.48	13.4	3.79	11.9	3.16	10.4	2.58	9.0	2.06	7.5	1.59	6.0	1.18	4.5	0.83
-14.5	-15.0	12.9	12.9	4.29	11.7	3.63	10.4	3.02	9.1	2.47	7.8	1.97	6.5	1.52	5.2	1.13	3.9	0.80

TC : Total Capacity PI : Power Input
Indoor air temperature conditions : 20.0 °C dry-bulb
All indoor unit operation

MCY-MHP1006HS8* (10HP, 28.0 kW system)

Cooling		Compressor + Outdoor Fan Power consumption (kW)															
Outdoor Unit Dry-Bulb (°C)	Outdoor Unit 100 % Cooling Capacity (kW)	100 %		90 %		80 %		70 %		60 %		50 %		40 %		30 %	
		TC (kW)	PI (kW)	TC (kW)	PI (kW)	TC (kW)	PI (kW)	TC (kW)	PI (kW)	TC (kW)	PI (kW)	TC (kW)	PI (kW)	TC (kW)	PI (kW)	TC (kW)	PI (kW)
40	25.2	25.2	10.0	22.7	8.20	20.2	6.58	17.7	5.15	15.1	3.93	12.6	2.90	10.1	2.07	7.6	1.44
39	25.9	25.9	9.89	23.3	8.09	20.7	6.49	18.1	5.08	15.5	3.87	12.9	2.86	10.4	2.04	7.8	1.42
37	27.0	27.0	9.61	24.3	7.86	21.6	6.31	18.9	4.94	16.2	3.76	13.5	2.78	10.8	1.98	8.1	1.38
35	28.0	28.0	9.34	25.2	7.64	22.4	6.13	19.6	4.80	16.8	3.66	14.0	2.70	11.2	1.93	8.4	1.34
33	28.0	28.0	8.90	25.2	7.28	22.4	5.84	19.6	4.57	16.8	3.48	14.0	2.57	11.2	1.84	8.4	1.28
31	28.0	28.0	8.46	25.2	6.92	22.4	5.55	19.6	4.35	16.8	3.31	14.0	2.45	11.2	1.75	8.4	1.21
30	28.0	28.0	8.24	25.2	6.74	22.4	5.41	19.6	4.24	16.8	3.23	14.0	2.38	11.2	1.70	8.4	1.18
29	28.0	28.0	8.02	25.2	6.56	22.4	5.27	19.6	4.12	16.8	3.14	14.0	2.32	11.2	1.66	8.4	1.15
27	28.0	28.0	7.59	25.2	6.21	22.4	4.98	19.6	3.90	16.8	2.97	14.0	2.19	11.2	1.57	8.4	1.09
25	28.0	28.0	7.15	25.2	5.85	22.4	4.69	19.6	3.67	16.8	2.80	14.0	2.07	11.2	1.47	8.4	1.02
23	28.0	28.0	6.71	25.2	5.49	22.4	4.40	19.6	3.45	16.8	2.63	14.0	1.94	11.2	1.38	8.4	0.96
21	28.0	28.0	6.27	25.2	5.13	22.4	4.12	19.6	3.22	16.8	2.46	14.0	1.81	11.2	1.29	8.4	0.90
20	28.0	28.0	6.06	25.2	4.95	22.4	3.97	19.6	3.11	16.8	2.37	14.0	1.75	11.2	1.25	8.4	0.87
19	28.0	28.0	5.84	25.2	4.78	22.4	3.83	19.6	3.00	16.8	2.29	14.0	1.69	11.2	1.20	8.4	0.84
17	28.0	28.0	5.40	25.2	4.42	22.4	3.54	19.6	2.78	16.8	2.11	14.0	1.56	11.2	1.11	8.4	0.77
15	28.0	28.0	4.96	25.2	4.06	22.4	3.26	19.6	2.55	16.8	1.94	14.0	1.43	11.2	1.02	8.4	0.71

TC : Total Capacity PI : Power Input
Indoor air temperature conditions : 27.0 °C dry-bulb / 19.0 °C wet bulb

Heating			Compressor + Outdoor Fan Power consumption (kW)															
Outdoor Unit		Outdoor Unit 100 % Heating Capacity (kW)	100 %		90 %		80 %		70 %		60 %		50 %		40 %		30 %	
Dry-Bulb (°C)	Wet-Bulb (°C)		TC (kW)	PI (kW)	TC (kW)	PI (kW)	TC (kW)	PI (kW)	TC (kW)	PI (kW)	TC (kW)	PI (kW)	TC (kW)	PI (kW)	TC (kW)	PI (kW)	TC (kW)	PI (kW)
15.0	13.7	28.0	28.0	5.50	25.2	4.65	22.4	3.87	19.6	3.16	16.8	2.52	14.0	1.95	11.2	1.45	8.4	1.02
13.0	11.8	28.0	28.0	5.87	25.2	4.97	22.4	4.14	19.6	3.38	16.8	2.70	14.0	2.09	11.2	1.55	8.4	1.09
11.0	9.8	28.0	28.0	6.25	25.2	5.29	22.4	4.40	19.6	3.60	16.8	2.87	14.0	2.22	11.2	1.65	8.4	1.16
9.0	7.9	28.0	28.0	6.62	25.2	5.60	22.4	4.67	19.6	3.81	16.8	3.04	14.0	2.35	11.2	1.75	8.4	1.22
7.0	6.0	28.0	28.0	7.00	25.2	5.92	22.4	4.93	19.6	4.03	16.8	3.21	14.0	2.49	11.2	1.85	8.4	1.29
5.0	4.1	26.9	26.9	6.89	24.2	5.83	21.5	4.85	18.8	3.96	16.1	3.16	13.5	2.45	10.8	1.82	8.1	1.27
3.0	2.2	25.8	25.8	6.77	23.2	5.73	20.6	4.77	18.1	3.90	15.5	3.11	12.9	2.41	10.3	1.79	7.7	1.25
0.0	-0.7	24.2	24.2	6.60	21.7	5.58	19.3	4.65	16.9	3.80	14.5	3.03	12.1	2.34	9.7	1.74	7.2	1.22
-3.0	-3.7	22.5	22.5	6.43	20.3	5.44	18.0	4.53	15.8	3.70	13.5	2.95	11.3	2.28	9.0	1.70	6.8	1.19
-5.0	-5.6	21.4	21.4	6.32	19.3	5.34	17.1	4.45	15.0	3.64	12.8	2.90	10.7	2.24	8.6	1.67	6.4	1.17
-7.0	-7.6	20.3	20.3	6.20	18.3	5.25	16.2	4.37	14.2	3.57	12.2	2.85	10.2	2.20	8.1	1.64	6.1	1.15
-10.0	-10.5	18.7	18.7	6.03	16.8	5.10	14.9	4.25	13.1	3.47	11.2	2.77	9.3	2.14	7.5	1.59	5.6	1.11
-14.5	-15.0	16.2	16.2	5.77	14.6	4.88	12.9	4.07	11.3	3.32	9.7	2.65	8.1	2.05	6.5	1.52	4.9	1.07

TC : Total Capacity PI : Power Input
Indoor air temperature conditions : 20.0 °C dry-bulb
All indoor unit operation

5-9. Sound pressure level data

MCY-MHP0806HS8-E

Sound pressure level (dB(A))	Cooling	Heating
	58	59

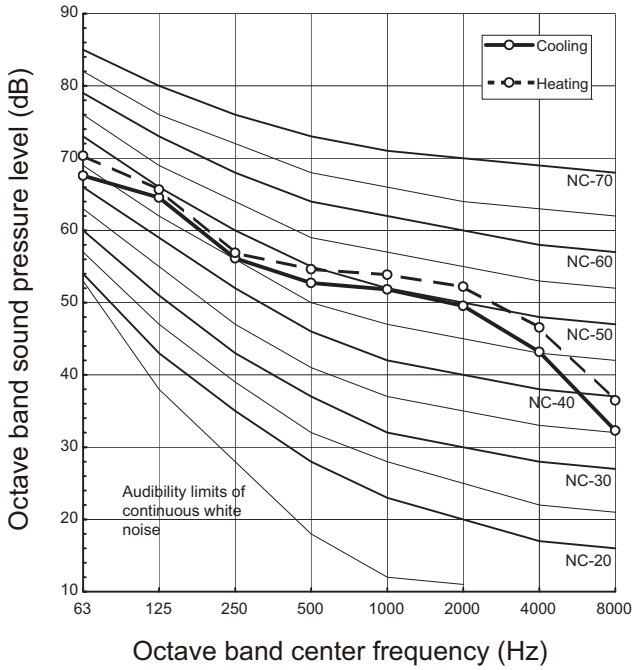

MCY-MHP1006HS8-E

Sound pressure level (dB(A))	Cooling	Heating
	59	60

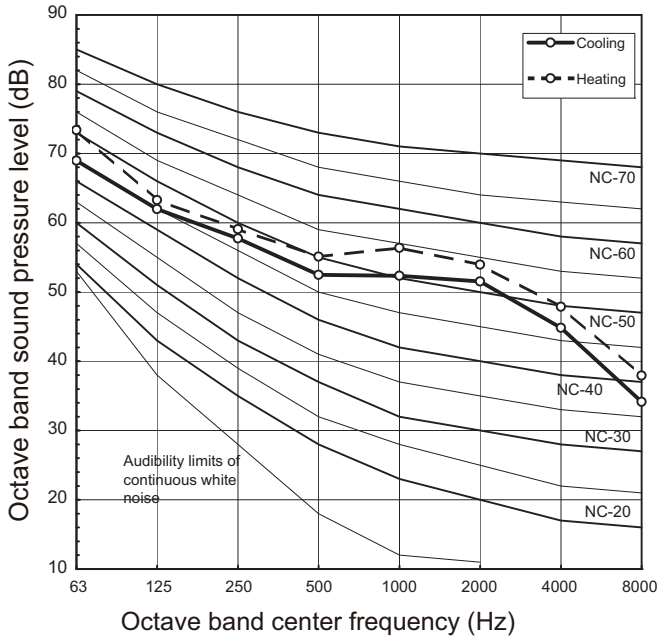

[Measuring location]

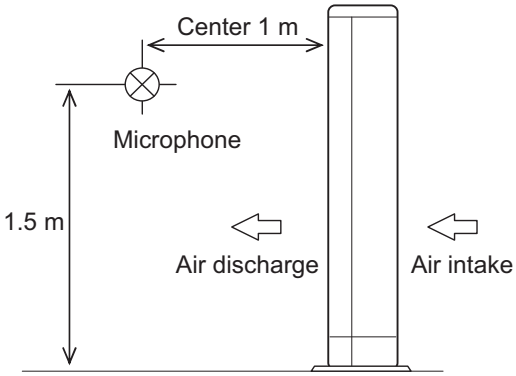

[Conditions]

Cooling
Outdoor temperature: 35 °C DB, 24 °C WB
Indoor air temperature: 27 °C DB, 19 °C WB

Heating
Outdoor temperature: 7 °C DB, 6 °C WB
Indoor air temperature: 20 °C DB

This sound pressure level are measured in an anechoic chamber in accordance.

- **Night operation (sound reduction) control**

MCY-MHP0806HS8-E, MCY-MHP1006HS8-E

Sound pressure level (dB(A))	Cooling	Heating
	50	50

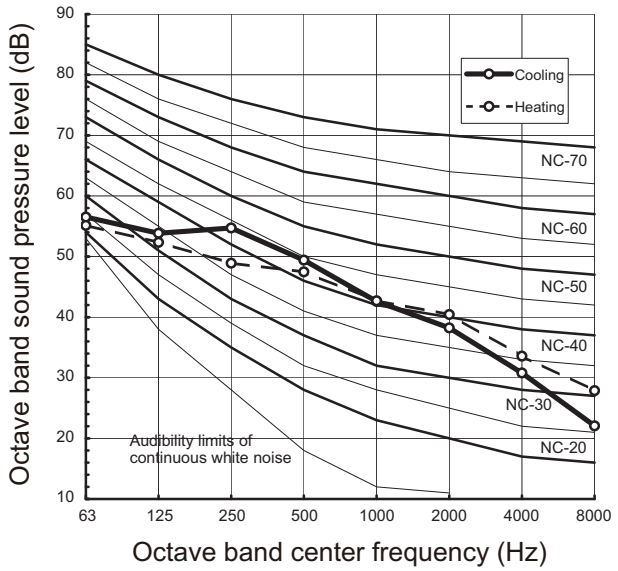

[Measuring location]

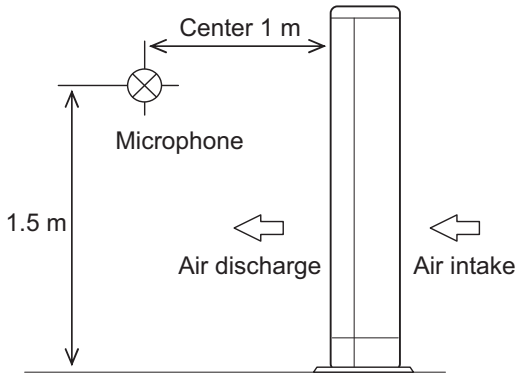

[Conditions]

Cooling
Outdoor temperature: 25 °C DB, 16 °C WB
Indoor air temperature: 27 °C DB, 19 °C WB

Heating
Outdoor temperature: 7 °C DB, 6 °C WB
Indoor air temperature: 20 °C DB

This sound pressure level are measured in an anechoic chamber in accordance.

5-10. PMV Kit

PMV-Kit (RBM-PMV0363E, RBM-PMV0903E, RBM-PMV0361U-E, RBM-PMV0901U-E) shall be required for quieter place application as an optional to reduce refrigerant sound especially in oil retrieval control or in transient operation as start up.

5-10-1. Selection

Model name	Indoor unit capacity type	Diameter of refrigerant pipe
RBM-PMV0363E, RBM-PMV0361U-E	005 to 012 type	ø6.4
RBM-PMV0903E, RBM-PMV0901U-E	015 to 018 type	ø6.4
	024 to 027 type	ø9.5

Allowable length of refrigerant piping

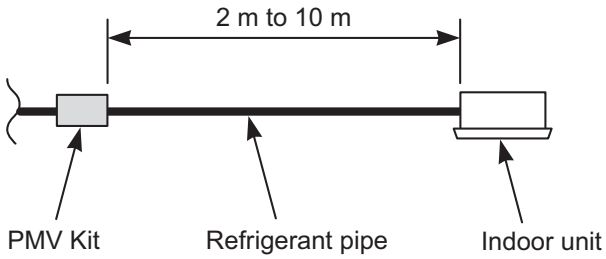

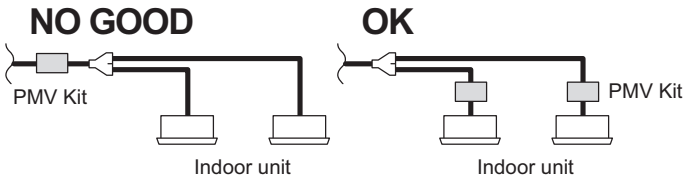

Note)
Do not connect two or more indoor units to one PMV Kit.
Arrange one indoor unit and one PMV Kit set to 1 by 1.

Label

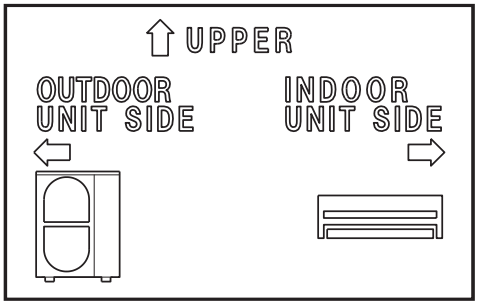

- Connecting direction of refrigerant pipe
  When connecting pipes, be careful of direction of the main unit. Be sure to install the main unit so that [UPPER] mark in the label directs upward.
  For connection of the refrigerant pipes, follow the arrow mark in the label and connect pipes after confirming directions of indoor unit and outdoor unit.

Piping material and dimensions

Model name	Indoor unit capacity type	Diameter of refrigerant pipe	Notes
RBM-PMV0363E, RBM-PMV0361U-E	005 to 012 type	ø6.4	
RBM-PMV0903E, RBM-PMV0901U-E	015 to 018 type	ø6.4	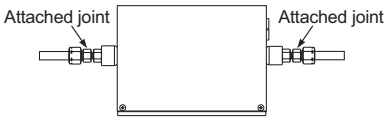
	024 to 027 type	ø9.5	

⚠ CAUTION

When connecting ø9.5 refrigerant pipes, be sure to insert a seal pipe between PMV main unit and the joint.
If the seal pipe is not inserted, refrigerant leakage is caused.

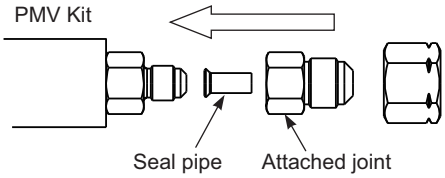

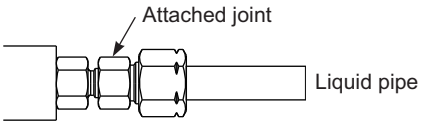

5-10-2. Wiring connections

For this product, the connector conversion cable and additional clamp filter (Accessory) are used according to the indoor unit to be connected.

For the corresponding unit and how to use the conversion cable and clamp filter, refer to the following description.

The connector conversion cable is not used for the indoor unit, but the additional clamp filter is used.

High Wall Type 3 series (MMK-AP***3H*)

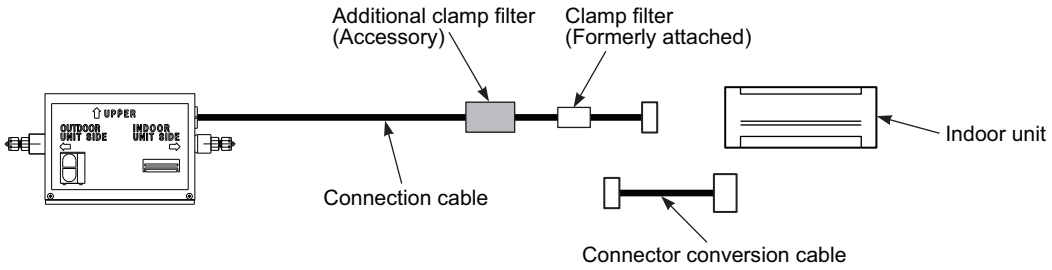

- Mount the clamp filter (Accessory) to the connection wire (11 m) out of the PMV kit main body. Refer to the mounting method.
- Remove the connector conversion cable mounted to the connection cable out of the PMV kit main body and then connect it.

The additional clamp filter is not used for the indoor unit, but the connector conversion cable is used.

Indoor unit except above indoor units

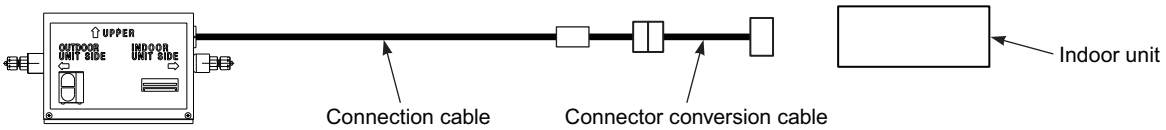

5-10-3. Dimensional drawing

- **PMV Kit**
  RBM-PMV0363E, RBM-PMV0903E, RBM-PMV0361U-E, RBM-PMV0901U-E

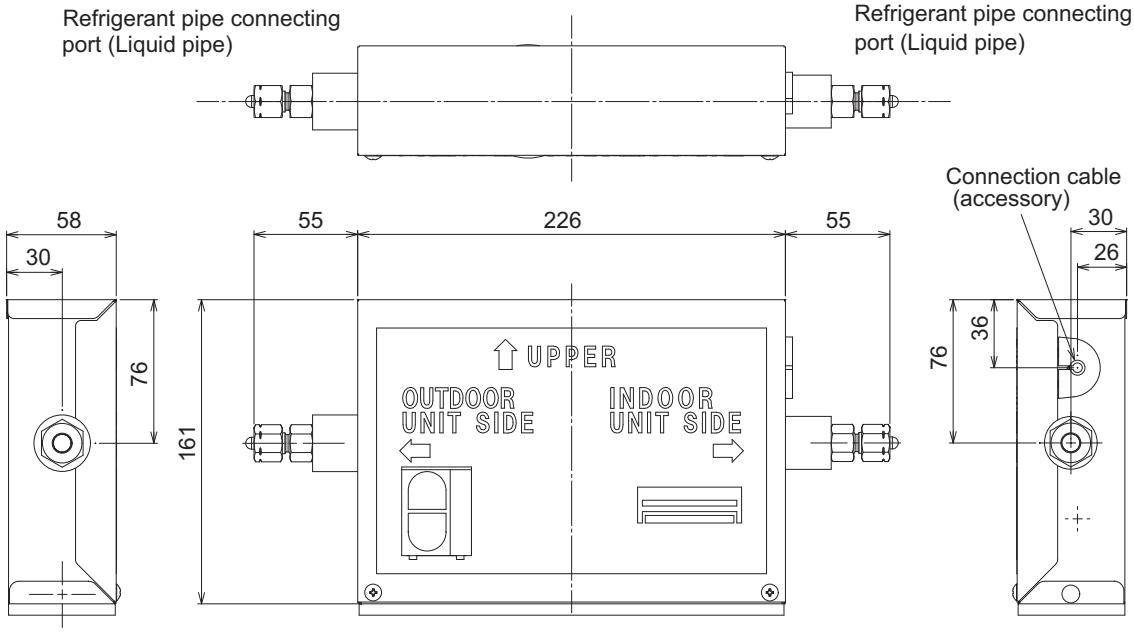

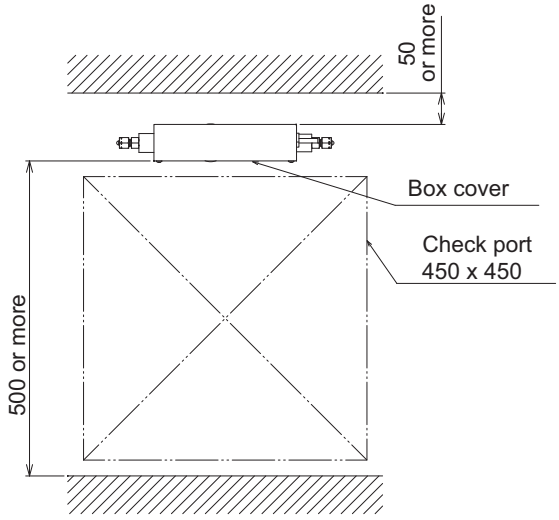

RBM-PMV0363E, RBM-PMV0903E, RBM-PMV0361U-E, RBM-PMV0901U-E

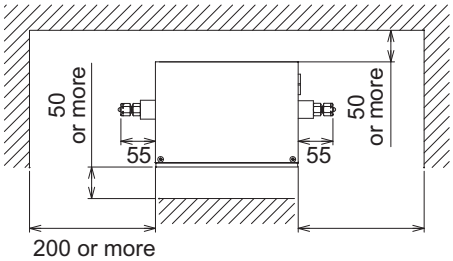

Installation image

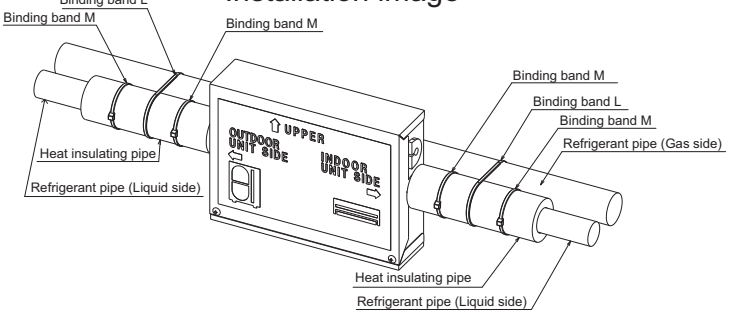

RBM-PMV0903E, RBM-PMV0901U-E
(When attached joint is used)

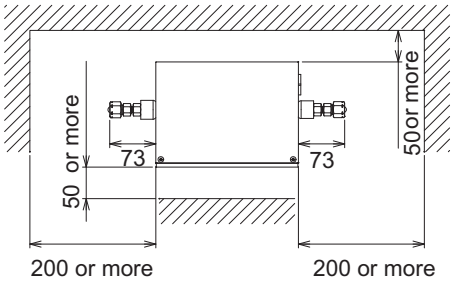

Note: All dimensions are in mm.

MiNi-SMMS-e 8-10HP Engineering Data Book

MCY-MHP_6HS8-E

Jan, 2020 First Edition
April, 2021 Fourth Edition

Toshiba Carrier Corporation