FILE NO. SVM-21088-2

TOSHIBA

SERVICE MANUAL

AIR-CONDITIONER
MULTI TYPE

INDOOR UNIT
< Concealed Duct High Static Pressure Type >

MMD-UP0721HP Series
MMD-UP0961HP Series

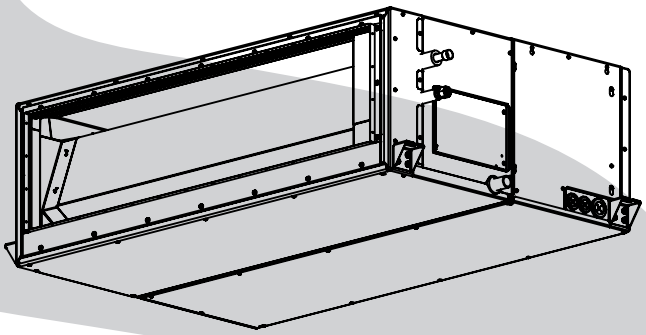

HFC
R410A

Revised on Jan, 2024

CONTENTS

PRECAUTIONS FOR SAFETY 6
1. SPECIFICATIONS 12
2.FAN CHARACTERISTICS 15
3.CONSTRUCTION VIEWS (EXTERNAL VIEWS) 16
4. WIRING DIAGRAMS 18
5.PARTS RATING 19
6.REFRIGERANT CYCLE DIAGRAM 20
7.CONTROL OUTLINE 21
8. APPLIED CONTROL AND FUNCTIONS (INCLUDING CIRCUIT CONFIGURATION) 27
8-1. Indoor controller block diagram 27
8-1-1. In Case of Connection of Wired (Simple) Remote Controller 27
8-1-2. In Case of Connection of Wireless Remote Controller 28
8-1-3. Connection of Both Wired (Simple) Remote Controller and Wireless Remote Controller 29
8-2. Indoor Circuit Design Board MCC-1643 30
8-2-1. Optional connector specifications of indoor P.C. board 31
8-2-2. Fan IPDU P.C. Board (MCC-1610) 32
8-2-3. Noise filter (MCC-1551) 33
8-3. Test run of indoor unit 34
8-4. Method to set indoor unit function DN code 38
8-5. Applied control of indoor unit 44
9.TROUBLESHOOTING 63
9-1. Overview 63
9-2. Troubleshooting method 64
9-3. Troubleshooting based on information displayed on remote controller 70
9-4. Check codes displayed on remote controller and SMMS outdoor unit (7-segment display on I/F board) and locations to be checked 75
9-5. Sensor characteristics 90
10. REPLACEMENT OF P.C.BOARD FOR INDOOR UNIT SERVICING 91
11. DETACHMENTS 96
12. EXPLODED VIEWS AND PARTS LIST 103

Original instruction

Please read carefully through these instructions that contain important information which complies with the “Machinery Directive" (Directive 2006/42/EC), and ensure that you understand them.

Generic Denomination: Air Conditioner

Definition of Qualified Installer or Qualified Service Person

The air conditioner must be installed, maintained, repaired and removed by a qualified installer or qualified service person. When any of these jobs is to be done, ask a qualified installer or qualified service person to do them for you.
A qualified installer or qualified service person is an agent who has the qualifications and knowledge described in the table below.

Agent	Qualifications and knowledge which the agent must have
Qualified installer	• The qualified installer is a person who installs, maintains, relocates and removes the air conditioners made by Toshiba Carrier Corporation. He or she has been trained to install, maintain, relocate and remove the air conditioners made by Toshiba Carrier Corporation or, alternatively, he or she has been instructed in such operations by an individual or individuals who have been trained and is thus thoroughly acquainted with the knowledge related to these operations. • The qualified installer who is allowed to do the electrical work involved in installation, relocation and removal has the qualifications pertaining to this electrical work as stipulated by the local laws and regulations, and he or she is a person who has been trained in matters relating to electrical work on the air conditioners made by Toshiba Carrier Corporation or, alternatively, he or she has been instructed in such matters by an individual or individuals who have been trained and is thus thoroughly acquainted with the knowledge related to this work. • The qualified installer who is allowed to do the refrigerant handling and piping work involved in installation, relocation and removal has the qualifications pertaining to this refrigerant handling and piping work as stipulated by the local laws and regulations, and he or she is a person who has been trained in matters relating to refrigerant handling and piping work on the air conditioners made by Toshiba Carrier Corporation or, alternatively, he or she has been instructed in such matters by an individual or individuals who have been trained and is thus thoroughly acquainted with the knowledge related to this work. • The qualified installer who is allowed to work at heights has been trained in matters relating to working at heights with the air conditioners made by Toshiba Carrier Corporation or, alternatively, he or she has been instructed in such matters by an individual or individuals who have been trained and is thus thoroughly acquainted with the knowledge related to this work.
Qualified service person	• The qualified service person is a person who installs, repairs, maintains, relocates and removes the air conditioners made by Toshiba Carrier Corporation. He or she has been trained to install, repair, maintain, relocate and remove the air conditioners made by Toshiba Carrier Corporation or, alternatively, he or she has been instructed in such operations by an individual or individuals who have been trained and is thus thoroughly acquainted with the knowledge related to these operations. • The qualified service person who is allowed to do the electrical work involved in installation, repair, relocation and removal has the qualifications pertaining to this electrical work as stipulated by the local laws and regulations, and he or she is a person who has been trained in matters relating to electrical work on the air conditioners made by Toshiba Carrier Corporation or, alternatively, he or she has been instructed in such matters by an individual or individuals who have been trained and is thus thoroughly acquainted with the knowledge related to this work. • The qualified service person who is allowed to do the refrigerant handling and piping work involved in installation, repair, relocation and removal has the qualifications pertaining to this refrigerant handling and piping work as stipulated by the local laws and regulations, and he or she is a person who has been trained in matters relating to refrigerant handling and piping work on the air conditioners made by Toshiba Carrier Corporation or, alternatively, he or she has been instructed in such matters by an individual or individuals who have been trained and is thus thoroughly acquainted with the knowledge related to this work. • The qualified service person who is allowed to work at heights has been trained in matters relating to working at heights with the air conditioners made by Toshiba Carrier Corporation or, alternatively, he or she has been instructed in such matters by an individual or individuals who have been trained and is thus thoroughly acquainted with the knowledge related to this work.

Definition of Protective Gear

When the air conditioner is to be transported, installed, maintained, repaired or removed, wear protective gloves and 'safety' work clothing.
In addition to such normal protective gear, wear the protective gear described below when undertaking the special work detailed in the table below.
Failure to wear the proper protective gear is dangerous because you will be more susceptible to injury, burns, electric shocks and other injuries.

Work undertaken	Protective gear to wear
All types of work	Protective gloves 'Safety' working clothing
Electrical-related work	Gloves to provide protection for electricians Insulating shoes Clothing to provide protection from electric shock
Work at heights (50 cm or more)	Helmets for use in industry
Transportation of heavy objects	Shoes with additional protective toe cap
Repair of outdoor unit	Gloves to provide protection for electricians

The important contents concerned to the safety are described on the product itself and on this Service Manual.
Please read this Service Manual after understanding the described items thoroughly in the following contents (Indications / Illustrated marks), and keep them.

[Explanation of indications]

Indication	Explanation
⚠ **DANGER**	Indicates contents assumed that an imminent danger causing a death or serious injury of the repair engineers and the third parties when an incorrect work has been executed.
⚠ **WARNING**	Indicates possibilities assumed that a danger causing a death or serious injury of the repair engineers, the third parties, and the users due to troubles of the product after work when an incorrect work has been executed.
⚠ **CAUTION**	Indicates contents assumed that an injury or property damage (*) may be caused on the repair engineers, the third parties, and the users due to troubles of the product after work when an incorrect work has been executed.

* Property damage: Enlarged damage concerned to property, furniture, and domestic animal / pet

[Explanation of illustrated marks]

Indication	Explanation
⃠	Indicates prohibited items (Forbidden items to do) The sentences near an illustrated mark describe the concrete prohibited contents.
❗	Indicates mandatory items (Compulsory items to do) The sentences near an illustrated mark describe the concrete mandatory contents.
⚠	Indicates cautions (Including danger / warning) The sentences or illustration near or in an illustrated mark describe the concrete cautious contents.

Warning Indications on the Air Conditioner Unit

[Confirmation of warning label on the main unit]

Confirm that labels are indicated on the specified positions
If removing the label during parts replace, stick it as the original.

Warning indication	Description
WARNING **ELECTRICAL SHOCK HAZARD** Disconnect all remote electric power supplies before servicing.	**WARNING** **ELECTRICAL SHOCK HAZARD** Disconnect all remote electric power supplies before servicing.
WARNING Moving parts. Do not operate unit with grille removed. Stop the unit before the servicing.	**WARNING** Moving parts. Do not operate unit with grille removed. Stop the unit before the servicing.
CAUTION High temperature parts. You might get burned when removing this panel.	**CAUTION** High temperature parts. You might get burned when removing this panel.
CAUTION Do not touch the aluminium fins of the unit. Doing so may result in injury.	**CAUTION** Do not touch the aluminium fins of the unit. Doing so may result in injury.
CAUTION **BURST HAZARD** Open the service valves before the operation, otherwise there might be the burst.	**CAUTION** **BURST HAZARD** Open the service valves before the operation, otherwise there might be the burst.
CAUTION **Do not climb onto the fan guard.** Doing so may result in injury.	**CAUTION** **Do not climb onto the fan guard.** Doing so may result in injury.

PRECAUTIONS FOR SAFETY

The manufacturer shall not assume any liability for the damage caused by not observing the description of this manual.

⚠ DANGER

Turn off breaker	Before carrying out the installation, maintenance, repair or removal work, be sure to set the circuit breaker for both the indoor and outdoor units to the OFF position. Otherwise, electric shocks may result.
	Before opening the electrical box cover of the indoor unit or service panel of the outdoor unit, set the circuit breaker to the OFF position. Failure to set the circuit breaker to the OFF position may result in electric shocks through contact with the interior parts. Only a qualified installer (*1) or qualified service person (*1) is allowed to remove the intake grille of the indoor unit or service panel of the outdoor unit and do the work required.
	Place a "Work in progress" sign near the circuit breaker while the installation, maintenance, repair or removal work is being carried out. There is a danger of electric shocks if the circuit breaker is set to ON by mistake.
	Before opening the inspection opening, set the circuit breaker to the OFF position. Failure to set the circuit breaker to the OFF position may result in injury through contact with the rotation parts. Only a qualified installer (*1) or qualified service person(*1) is allowed to remove the inspection opening and do the work required.
	When cleaning the filter (sold separately) or other parts of the indoor unit, set the circuit breaker to OFF without fail, and place a “Work in progress” sign near the circuit breaker before proceeding with the work.
	When you have noticed that some kind of trouble (such as when check code display has appeared, there is a smell of burning, abnormal sounds are heard, the air conditioner fails to cool or heat or water is leaking) has occurred in the air conditioner, do not touch the air conditioner yourself but set the circuit breaker to the OFF position, and contact a qualified service person. Take steps to ensure that the power will not be turned on (by marking “out of service” near the circuit breaker, for instance) until qualified service person arrives. Continuing to use the air conditioner in the trouble status may cause mechanical problems to escalate or result in electric shocks or other failure.
Electric shock hazard	When you access inside of the service panel to repair electric parts, wait for about five minutes after turning off the breaker. Do not start repairing immediately.Otherwise you may get electric shock by touching terminals of high-voltage capacitors. Natural discharge of the capacitor takes about five minutes.
	When checking the electric parts, removing the cover of the electric parts box of Indoor Unit and/or service panel of Outdoor Unit inevitably to determine the failure, use gloves to provide protection for electricians, insulating shoes, clothing to provide protection from electric shock and insulating tools. Be careful not to touch the live part. Electric shock may result. Only “Qualified service person” is allowed to do this work.
	Before operating the air conditioner after having completed the work, check that the electrical partw box cover of the indoor unit and service panel of the outdoor unit are closed, and set the circuit breaker to the on position. You may receive on electric shock if the power is turned on without first conducting these checks.
Prohibition	Place a “Work in progress” sign near the circuit breaker while the installation, maintenance, repair or removal work is being carried out. There is a danger of electric shocks if the circuit breaker is set to ON by mistake.
	When checking the electric parts, removing the cover of the electric parts box of Indoor Unit and/or front panel of Outdoor Unit inevitably to determine the failure, put a sign “Do not enter” around the site before the work. Failure to do this may result in third person getting electric shock.
	Before operating the air conditioner after having completed the work, check that the electrical parts box cover of the indoor unit and service panel of the outdoor unit are closed, and set the circuit breaker to the ON position. You may receive an electric shock if the power is turned on without first conducting these checks.
Stay on protection	If, in the course of carrying out repairs, it becomes absolutely necessary to check out the electrical parts with the electrical parts box cover of one or more of the indoor units and the service panel of the outdoor unit removed in order to find out exactly where the trouble lies, wear insulated heat-resistant gloves, insulated boots and insulated work overalls, and take care to avoid touching any live parts. You may receive an electric shock if you fail to heed this warning. Only qualified service person (*1) is allowed to do this kind of work.

⚠ WARNIG

General	Before starting to repair the air conditioner, read carefully through the Service Manual, and repair the air conditioner by following its instructions.
	Only qualified service person (*1) is allowed to repair the air conditioner. Repair of the air conditioner by unqualified person may give rise to a fire, electric shocks, injury, water leaks and / or other problems.
	Inside the air conditioner are high-voltage areas and rotating parts. Due to the danger of electric shocks or of your fingers or physical objects becoming trapped in the rotating part, do not remove the electrical control box cover of the indoor unit or service panel of the outdoor unit. When work involving the removal of these parts is required, contact a qualified installer or a qualified service person.
	Only a qualified installer (*1) or qualified service person (*1) is allowed to carry out the electrical work of the air conditioner. Under no circumstances must this work be done by an unqualified individual since failure to carry out the work properly may result in electric shocks and / or electrical leaks.
	When the air conditioner is to be transported, installed, maintained, repaired or removed, wear protective gloves and 'safety' work clothing.
	To connect the electrical wires, repair the electrical parts or undertake other electrical jobs, wear gloves to provide protection for electricians, insulating shoes and clothing to provide protection from electric shocks. Failure to wear this protective gear may result in electric shocks.
	When checking the electric parts, removing the cover of the electric parts box of Indoor Unit and/or front panel of Outdoor Unit inevitably to determine the failure, put a sing "Do not enter" around the site before the work. Failure to do this may result in third person getting electric shock.
	Electrical wiring work shall be conducted according to law and regulation in the community and installation manual. Failure to do so may result in electrocution or short circuit.
	Use wiring that meets the specifications in the Installation Manual and the stipulations in the local regulations and laws. Use of wiring which does not meet the specifications may give rise to electric shocks, electrical leakage, smoking and/or a fire.
	Only a qualified installer (*1) or qualified service person (*1) is allowed to undertake work at heights using a stand of 50 cm or more or to remove the intake grille of the indoor unit to undertake work.
	When working at heights, use a ladder which complies with the ISO 14122 standard, and follow the procedure in the ladder's instructions. Also wear a helmet for use in industry as protective gear to undertake the work.
	Before working at heights, put a sign in place so that no-one will approach the work location, before proceeding with the work. Parts and other objects may fall from above, possibly injuring a person below. While carrying out the work, wear a helmet for protection from falling objects.
	When executing address setting, test run, or troubleshooting through the checking window on the electric parts box, put on insulated gloves to provide protection from electric shock. Otherwise you may receive an electric shock.
	Do not touch the aluminum fin of the unit. You may injure yourself if you do so. If the fin must be touched for some reason, first put on protective gloves and safety work clothing, and then proceed.
	Use forklift to carry in the air conditioner units and use winch or hoist at installation of them.
	When transporting the air conditioner, wear shoes with protective toe caps, protective gloves and other protective clothing.
	When transporting the air conditioner, do not take hold of the bands around the packing carton. You may injure yourself if the bands should break.
Check earth wires.	Before troubleshooting or repair work, check the earth wire is connected to the earth terminals of the main unit, otherwise an electric shock is caused when a leak occurs.If the earth wire is not correctly connected, contact an electric engineer for rework.
	After completing the repair or relocation work, check that the earth wires are connected properly.
	Be sure to connect earth wire. Incomplete earthing causes an electric shock. Do not connect earth wires to gas pipes, water pipes, and lightning rods or earth wires for telephone wires.

Prohibition of modification.	Do not modify the products.Do not also disassemble or modify the parts. It may cause a fire, electric shock or injury.
Use specified parts.	When any of the electrical parts are to be replaced, ensure that the replacement parts satisfy the specifications given in the Service Manual (or use the parts contained on the parts list in the Service Manual). Use of any parts which do not satisfy the required specifications may give rise to electric shocks, smoking and / or a fire.
Do not bring a child close to the equipment.	If, in the course of carrying out repairs, it becomes absolutely necessary to check out the electrical parts with the electrical parts box cover of one or more of the indoor units and the service panel of the outdoor unit removed in order to find out exactly where the trouble lies, put a sign in place so that no-one will approach the work location before proceeding with the work. Third-party individuals may enter the work site and receive electric shocks if this warning is not heeded.
Insulating measures	Connect the cut-off lead wires with crimp contact, etc., put the closed end side upward and then apply a water cut method, otherwise a leak or production of fire is caused at the users' side.
No fire	When performing repairs using a gas burner, replace the refrigerant with nitrogen gas because the oil that coats the pipes may otherwise burn. When repairing the refrigerating cycle, take the following measures. 1) Be attentive to fire around the cycle. When using a gas stove, etc., be sure to put out fire before work; otherwise the oil mixed with refrigerant gas may catch fire. 2) Do not use a welder in the closed room. When using it without ventilation, carbon monoxide poisoning may be caused. 3) Do not bring inflammables close to the refrigerant cycle, otherwise fire of the welder may catch the inflammables.
Refrigerant	The refrigerant used by this air conditioner is the R410A.
	Check the used refrigerant name and use tools and materials of the parts which match with it. For the products which use R410A refrigerant, the refrigerant name is indicated at a position on the outdoor unit where is easy to see. To prevent miss-charging, the route of the service port is changed from one of the former R22.
	Do not use any refrigerant different from the one specified for complement or replacement. Otherwise, abnormally high pressure may be generated in the refrigeration cycle, which may result in a failure or explosion of the product or an injury to your body.
	For an air conditioner which uses R410A, never use other refrigerant than R410A. For an air conditioner which uses other refrigerant (R22, etc.), never use R410A. If different types of refrigerant are mixed, abnormal high pressure generates in the refrigerating cycle and an injury due to breakage may be caused.
	When the air conditioner has been installed or relocated, follow the instructions in the Installation Manual and purge the air completely so that no gases other than the refrigerant will be mixed in the refrigerating cycle. Failure to purge the air completely may cause the air conditioner to malfunction.
	Do not charge refrigerant additionally. If charging refrigerant additionally when refrigerant gas leaks, the refrigerant composition in the refrigerating cycle changes resulted in change of air conditioner characteristics or refrigerant over the specified standard amount is charged and an abnormal high pressure is applied to the inside of the refrigerating cycle resulted in cause of breakage or injury. Therefore if the refrigerant gas leaks, recover the refrigerant in the air conditioner, execute vacuuming, and then newly recharge the specified amount of liquid refrigerant. In this time, never charge the refrigerant over the specified amount.
	When recharging the refrigerant in the refrigerating cycle, do not mix the refrigerant or air other than R410A into the specified refrigerant. If air or others is mixed with the refrigerant, abnormal high pressure generates in the refrigerating cycle resulted in cause of injury due to breakage.
	After installation work, check the refrigerant gas does not leak. If the refrigerant gas leaks in the room, poisonous gas generates when gas touches to fire such as fan heater, stove or cocking stove though the refrigerant gas itself is innocuous.
	Never recover the refrigerant into the outdoor unit. When the equipment is moved or repaired, be sure to recover the refrigerant with recovering device. The refrigerant cannot be recovered in the outdoor unit; otherwise a serious accident such as breakage or injury is caused.

Assembly / Wiring	After repair work, surely assemble the disassembled parts, and connect and lead the removed wires as before. Perform the work so that the cabinet or panel does not catch the inner wires. If incorrect assembly or incorrect wire connection was done, a disaster such as a leak or fire is caused at user's side.
Insulator check	After the work has finished, be sure to use an insulation tester set (500 V Megger) to check the resistance is 1 MΩ or more between the charge section and the non-charge metal section (Earth position). If the resistance value is low, a disaster such as a leak or electric shock is caused at user's side.
Ventilation	When the refrigerant gas leaks during work, execute ventilation. If the refrigerant gas touches to a fire, poisonous gas generates. A case of leakage of the refrigerant and the closed room full with gas is dangerous because a shortage of oxygen occurs. Be sure to execute ventilation.
	If refrigerant gas has leaked during the installation work, ventilate the room immediately. If the leaked refrigerant gas comes in contact with fire, noxious gas may generate.
	After installation work, check the refrigerant gas does not leak. If the refrigerant gas leaks in the room, poisonous gas generates when gas touches to fire such as fan heater, stove or cocking stove though the refrigerant gas itself is innocuous.
Compulsion	When the refrigerant gas leaks, find up the leaked position and repair it surely. If the leaked position cannot be found up and the repair work is interrupted, pump-down and tighten the service valve, otherwise the refrigerant gas may leak into the room. The poisonous gas generates when gas touches to fire such as fan heater, stove or cocking stove though the refrigerant gas itself is innocuous. When installing equipment which includes a large amount of charged refrigerant such as a multi air conditioner in a sub-room, it is necessary that the density does not the limit even if the refrigerant leaks. If the refrigerant leaks and exceeds the limit density, an accident of shortage of oxygen is caused.
	Tighten the flare nut with a torque wrench in the specified manner. Excessive tighten of the flare nut may cause a crack in the flare nut after a long period, which may result in refrigerant leakage.
	Nitrogen gas must be used for the airtight test.
	The charge hose must be connected in such a way that it is not slack.
	For the installation / moving / reinstallation work, follow to the Installation Manual. If an incorrect installation is done, a trouble of the refrigerating cycle, water leak, electric shock or fire is caused.
Check after repair	Once the repair work has been completed, check for refrigerant leaks, and check the insulation resistance and water drainage. Then perform a trial run to check that the air conditioner is running properly.
	After repair work has finished, check there is no trouble. If check is not executed, a fire, electric shock or injury may be caused. For a check, turn off the power breaker.
	After repair work (installation of front panel and cabinet) has finished, execute a test run to check there is no generation of smoke or abnormal sound. If check is not executed, a fire or an electric shock is caused. Before test run, install the front panel and cabinet.
	Be sure to fix the screws back which have been removed for installation or other purposes.
Do not operate the unit with the valve closed.	Check the following matters before a test run after repairing piping. • Connect the pipes surely and there is no leak of refrigerant. • The valve is opened. Running the compressor under condition that the valve closes causes an abnormal high pressure resulted in damage of the parts of the compressor and etc. and moreover if there is leak of refrigerant at connecting section of pipes, the air is sucked and causes further abnormal high pressure resulted in burst or injury.
Check after reinstallation	Only a qualified installer (*1) or qualified service person (*1) is allowed to relocate the air conditioner. It is dangerous for the air conditioner to be relocated by an unqualified individual since a fire, electric shocks, injury, water leakage, noise and / or vibration may result.
	Check the following items after reinstallation. 1) The earth wire is correctly connected. 2) The power cord is not caught in the product. 3) There is no inclination or unsteadiness and the installation is stable. If check is not executed, a fire, an electric shock or an injury is caused.
	When carrying out the pump-down work shut down the compressor before disconnecting the refrigerant pipe. Disconnecting the refrigerant pipe with the service valve left open and the compressor still operating will cause air, etc. to be sucked in, raising the pressure inside the refrigeration cycle to an abnormally high level, and possibly resulting in reputing, injury, etc.

Cooling check	When the service panel of the outdoor unit is to be opened in order for the compressor or the area around this part to be repaired immediately after the air conditioner has been shut down, set the circuit breaker to the OFF position, and then wait at least 10 minutes before opening the service panel. If you fail to heed this warning, you will run the risk of burning yourself because the compressor pipes and other parts will be very hot to the touch. In addition, before proceeding with the repair work, wear the kind of insulated heat-resistant gloves designed to protect electricians.
	Take care not to get burned by compressor pipes or other parts when checking the cooling cycle while running the unit as they get heated while running. Be sure to put on gloves providing protection for heat.
	When the service panel of the outdoor unit is to be opened in order for the fan motor, reactor, inverter or the areas around these parts to be repaired immediately after the air conditioner has been shut down, set the circuit breaker to the OFF position, and then wait at least 10 minutes before opening the service panel. If you fail to heed this warning, you will run the risk of burning yourself because the fan motor, reactor, inverter heat sink and other parts will be very hot to the touch. In addition, before proceeding with the repair work, wear the kind of insulated heat-resistant gloves designed to protect electricians.
Installation	Only a qualified installer or service person is allowed to do installation work. Inappropriate installation may result in water leakage, electric shock or fire.
	Before starting to install the air conditioner, read carefully through the Installation Manual, and follow its instructions to install the air conditioner.
	Be sure to use the company-specified products for the separately purchased parts. Use of non-specified products may result in fire, electric shock, water leakage or other failure. Have the installation performed by a qualified installer.
	Do not install the air conditioner in a location that may be subject to a risk of expire to a combustible gas. If a combustible gas leaks and becomes concentrated around the unit, a fire may occur.
	Install the indoor unit at least 2.5 m above the floor level since otherwise the users may injure themselves or receive electric shocks if they poke their fingers or other objects into the indoor unit while the air conditioner is running.
	Install a circuit breaker that meets the specifications in the installation manual and the stipulations in the local regulations and laws.
	Install the circuit breaker where it can be easily accessed by the agent.
	If you install the unit in a small room, take appropriate measures to prevent the refrigerant from exceeding the limit concentration even if it leaks. Consult the dealer from whom you purchased the air conditioner when you implement the measures. Accumulation of highly concentrated refrigerant may cause an oxygen deficiency accident.
	Do not place any combustion appliance in a place where it is directly exposed to the wind of air conditioner, otherwise it may cause imperfect combustion.

Explanations given to user

If you have discovered that the fan grille is damaged, do not approach the outdoor unit but set the circuit breaker to the OFF position, and contact a qualified service person to have the repairs done.
Do not set the circuit breaker to the ON position until the repairs are completed.

Relocation

- Only a qualified installer (*1) or qualified service person (*1) is allowed to relocate the air conditioner.
  It is dangerous for the air conditioner to be relocated by an unqualified individual since a fire, electric shocks, injury, water leakage, noise and / or vibration may result.
- When carrying out the pump-down work shut down the compressor before disconnecting the refrigerant pipe.
  Disconnecting the refrigerant pipe with the service valve left open and the compressor still operating will cause air, etc. to be sucked in, raising the pressure inside the refrigeration cycle to an abnormally high level, and possibly resulting in reputing, injury, etc.

(*1) Refer to the “Definition of Qualified Installer or Qualified Service Person”

Specifications

Model	Sound pressure level (dBA)		Weight (kg) Main unit
	Cooling	Heating	
MMD-UP0721HP*	44	44	97
MMD-UP0961HP*	46	46	97

1. SPECIFICATIONS

Concealed Duct High Static Pressure Type

(50Hz)

Model name		MMD	UP0721HP-E1(TR1)	UP0961HP-E1(TR1)
Cooling capacity …Note 1		(kW)	22.4	28.0
Heating capacity …Note 1		(kW)	25.0	31.5
Electrical characteristics (factory setting)	Power supply		1Ph. 230V(220V-240V)~50Hz & 1Ph. 220V(208V-230V)~60Hz	
	Running current (50Hz)	(A)	2.83	3.77
	Power consumption	(W)	540	790
	Starting current (50Hz)	(A)	7.80	7.80
Appearance			Zinc hot dipping steel plate	
Dimension	Height	(mm)	448	
	Width	(mm)	1400	
	Depth	(mm)	900	
Total weight		(kg)	97	
Heat exchanger			Finned tube	
Soundproof / Heat-insulating material			Polyethylene foam	
Fan unit	Fan		Centrifugal fan	
	Standard air flow (Med./Low)	(m3/hr)	3,800 (3,200/2,500)	4,800 (4,200/3,500)
	Motor output	(W)	1000 * 1pc	
	External static pressure (factory setting)	(Pa)	150	
	External static pressure range	(Pa)	50-83-117-150-183-217-250 (7 steps)	
Controller			–	
Air filter			Standard Filler (TCB-LK2801DP-E)	
Connecting pipe	Gas side	(mm)	Φ22.2	
	Liquid side	(mm)	Φ12.7	
	Drain port	(mm)	25 (Polyvinyl chloride tube)	
Sound pressure level (High/Med./Low) …Note 2 (factory setting)		(dB(A))	44 / 40 / 36	46 / 42 / 38
Sound power level (High/Med./Low)		(dB(A))	79 / 75 / 71	81 / 77 / 73

Note 1 : The cooling capacities and electrical characteristics are measured under the conditions specified by JIS B 8615 based on the reference piping.
The reference piping consists of 5m of main piping and 2.5m of branch piping connected with 0 meter height.

Note 2 : The sound level are measured in an anechoic chamber in accordance with JIS B 8616.
Normally, the values measured in the actual operating environment become larger than the indicated valves due to the effects of external sound.

Note : Rated conditions Cooling : Indoor air temperature 27℃ DB/19℃ WB, Outdoor air temperature 35℃ DB
Heating : Indoor air temperature 20℃ DB, Outdoor air temperature 7℃ DB/6℃ WB

(60Hz)

Model name		MMD	UP0721HP-K	UP0961HP-K
Cooling capacity …Note 1		(kW)	22.4	28.0
Heating capacity …Note 1		(kW)	25.0	31.5
Electrical characteristics (factory setting)	Power supply		1Ph. 220V~60Hz	
	Running current (50Hz)	(A)	2.93	3.92
	Power consumption	(W)	540	790
	Starting current (50Hz)	(A)	8.15	8.15
Appearance			Zinc hot dipping steel plate	
Dimension	Height	(mm)	448	
	Width	(mm)	1400	
	Depth	(mm)	900	
Total weight		(kg)	97	
Heat exchanger			Finned tube	
Soundproof / Heat-insulating material			Polyethylene foam	
Fan unit	Fan		Centrifugal fan	
	Standard air flow (Med./Low)	(m3/hr)	3,800 (3,200/2,500)	4,800 (4,200/3,500)
	Motor output	(W)	1000 * 1pc	
	External static pressure (factory setting)	(Pa)	150	
	External static pressure range	(Pa)	50-83-117-150-183-217-250 (7 steps)	
Controller			–	
Air filter			Standard Filler (TCB-LK2801DP-E)	
Connecting pipe	Gas side	(mm)	Φ22.2	
	Liquid side	(mm)	Φ12.7	
	Drain port	(mm)	25 (Polyvinyl chloride tube)	
Sound pressure level (High/Med./Low) …Note 2 (factory setting)		(dB(A))	44 / 40 / 36	46 / 42 / 38
Sound power level (High/Med./Low)		(dB(A))	79 / 75 / 71	81 / 77 / 73

Note 1 : The cooling capacities and electrical characteristics are measured under the conditions specified by JIS B 8615 based on the reference piping.
The reference piping consists of 5m of main piping and 2.5m of branch piping connected with 0 meter height.

Note 2 : The sound level are measured in an anechoic chamber in accordance with JIS B 8616.
Normally, the values measured in the actual operating environment become larger than the indicated valves due to the effects of external sound.

Note : Rated conditions Cooling : Indoor air temperature 27℃ DB/19℃ WB, Outdoor air temperature 35℃ DB
Heating : Indoor air temperature 20℃ DB, Outdoor air temperature 7℃ DB/6℃ WB

(50Hz)

Model name		MMD	UP0721HP-T	UP0961HP-T
Cooling capacity …Note 1		(kW)	22.4	28.0
Heating capacity …Note 1		(kW)	25.0	31.5
Electrical characteristics (factory setting)	Power supply		1Ph. 220V~50Hz	
	Running current (50Hz)	(A)	2.93	3.92
	Power consumption	(W)	540	790
	Starting current (50Hz)	(A)	8.15	8.15
Appearance			Zinc hot dipping steel plate	
Dimension	Height	(mm)	448	
	Width	(mm)	1400	
	Depth	(mm)	900	
Total weight		(kg)	97	
Heat exchanger			Finned tube	
Soundproof / Heat-insulating material			Polyethylene foam	
Fan unit	Fan		Centrifugal fan	
	Standard air flow (Med./Low)	(m3/hr)	3,800 (3,200/2,500)	4,800 (4,200/3,500)
	Motor output	(W)	1000 * 1pc	
	External static pressure (factory setting)	(Pa)	150	
	External static pressure range	(Pa)	50-83-117-150-183-217-250 (7 steps)	
Controller			–	
Air filter			Standard Filler (TCB-LK2801DP-E)	
Connecting pipe	Gas side	(mm)	Φ22.2	
	Liquid side	(mm)	Φ12.7	
	Drain port	(mm)	25 (Polyvinyl chloride tube)	
Sound pressure level (High/Med./Low) …Note 2 (factory setting)		(dB(A))	44 / 40 / 36	46 / 42 / 38
Sound power level (High/Med./Low)		(dB(A))	79 / 75 / 71	81 / 77 / 73

Note 1 : The cooling capacities and electrical characteristics are measured under the conditions specified by JIS B 8615 based on the reference piping.
The reference piping consists of 5m of main piping and 2.5m of branch piping connected with 0 meter height.

Note 2 : The sound level are measured in an anechoic chamber in accordance with JIS B 8616.
Normally, the values measured in the actual operating environment become larger than the indicated valves due to the effects of external sound.

Note : Rated conditions Cooling : Indoor air temperature 27℃ DB/19℃ WB, Outdoor air temperature 35℃ DB
Heating : Indoor air temperature 20℃ DB, Outdoor air temperature 7℃ DB/6℃ WB

2. FAN CHARACTERISTICS

UP0721 type

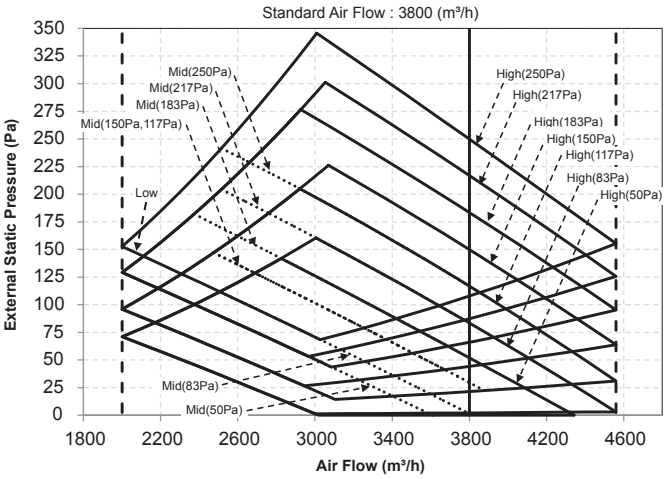

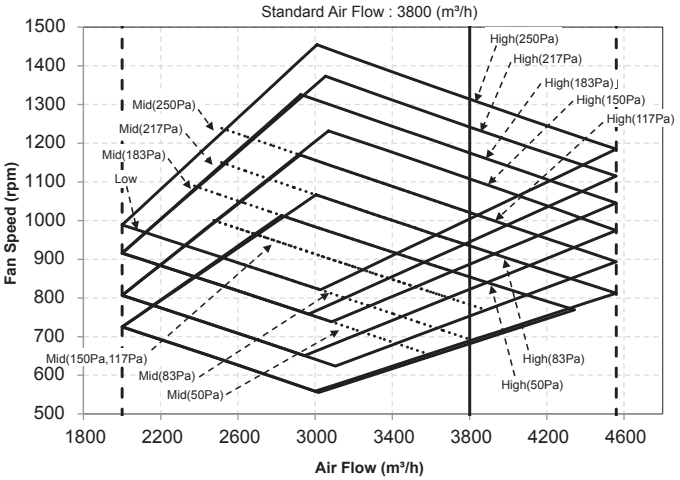

UP0961 type

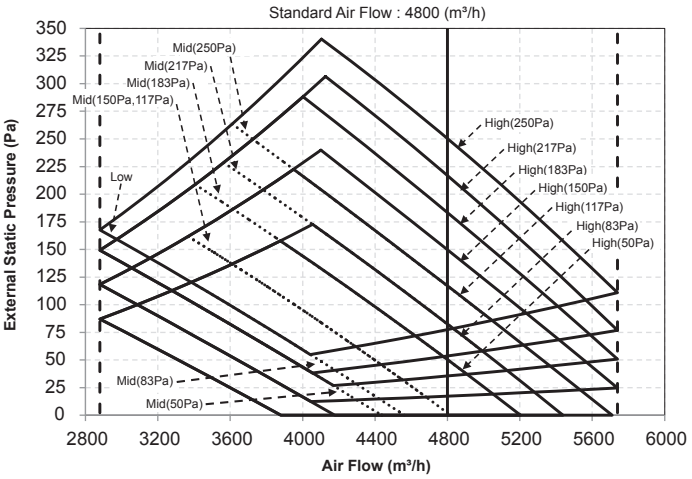

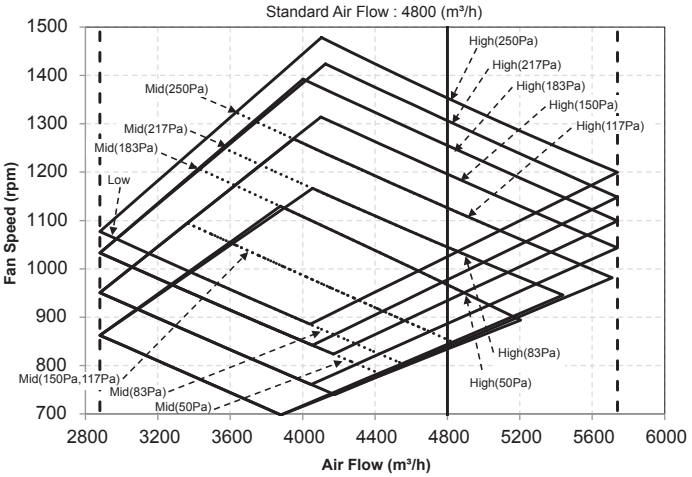

3. CONSTRUCTION VIEWS (EXTERNAL VIEWS)

Unit : mm

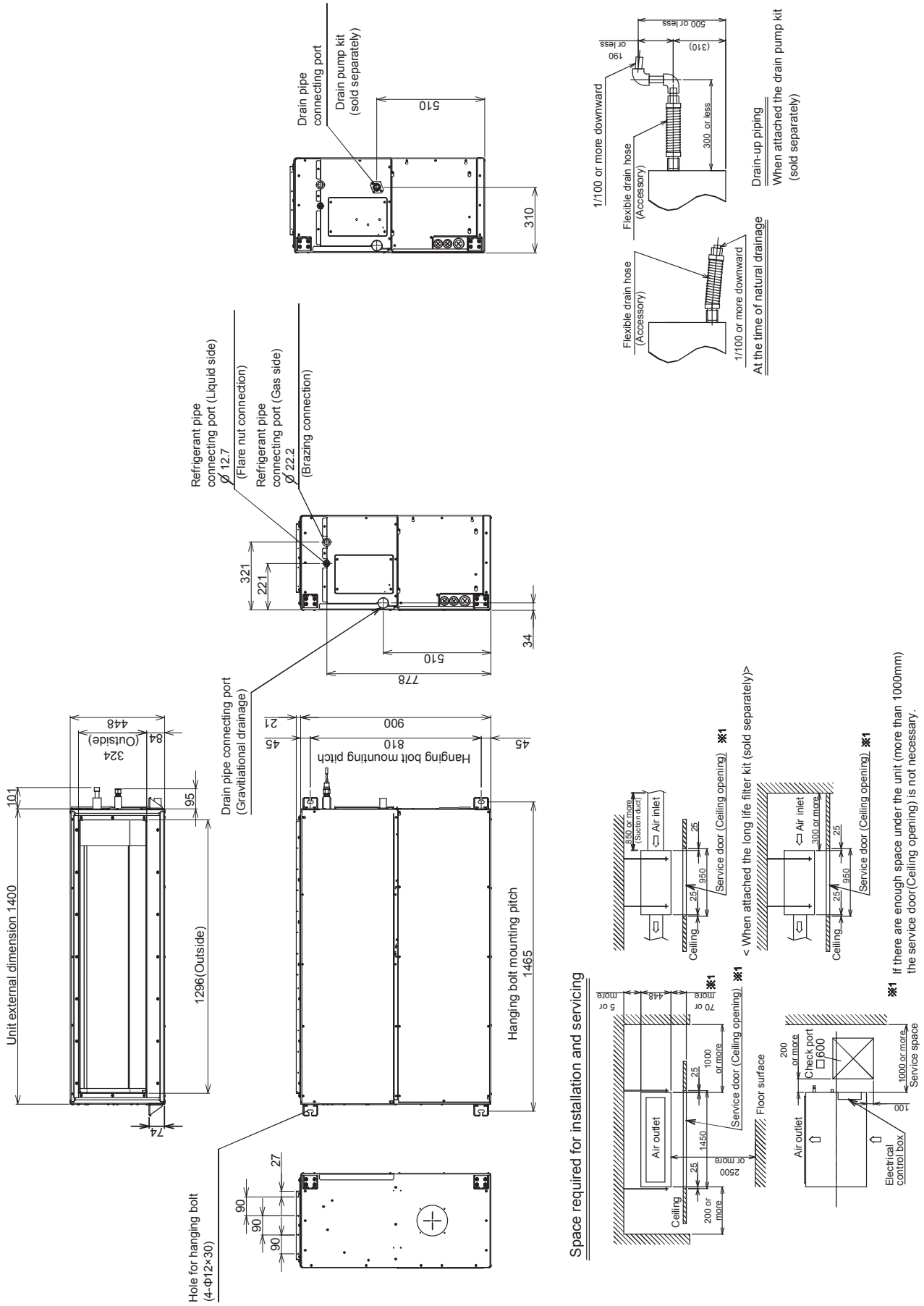

Duct arrangement

Unit : mm

<Air outlet>

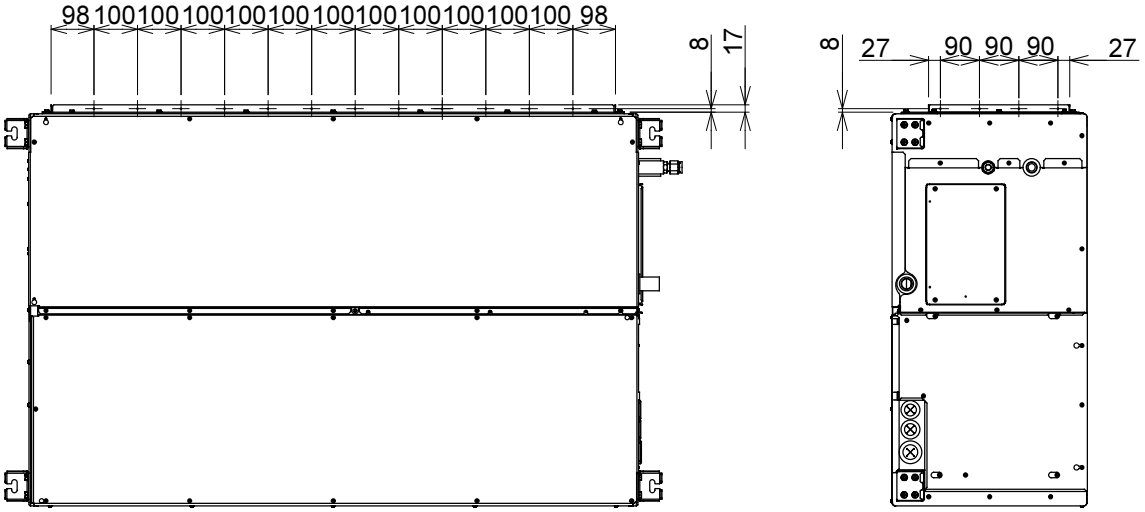

<Air inlet>

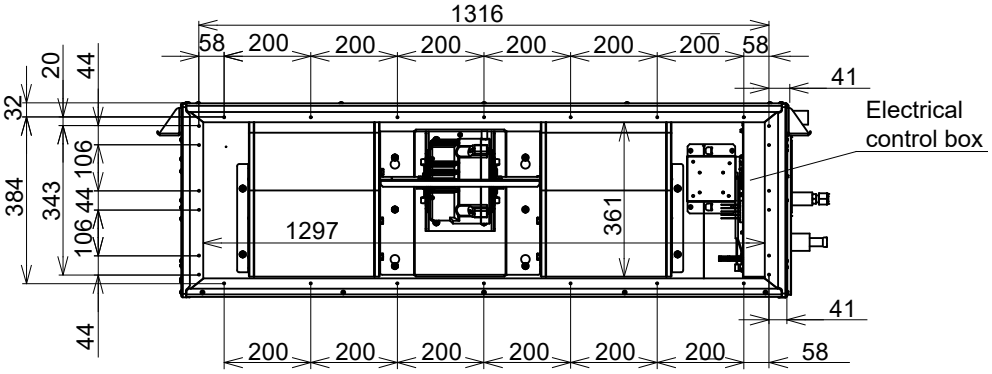

4. WIRING DIAGRAMS

Concealed Duct High Static Pressure Type Wiring Diagram

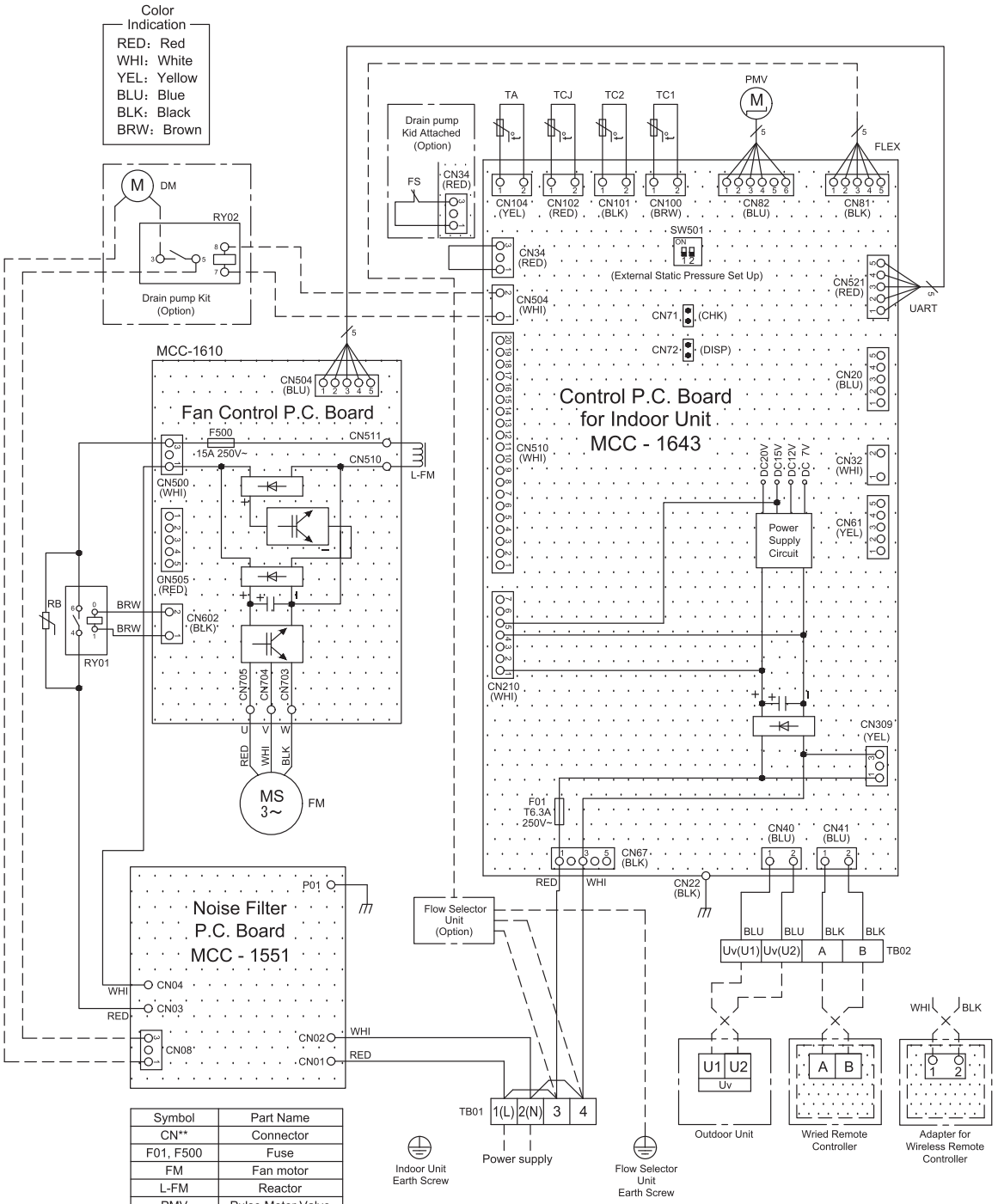

	Symbol	Part Name
	CN**	Connector
	F01, F500	Fuse
	FM	Fan motor
	L-FM	Reactor
	PMV	Pulse Motor Valve
	RB	Rust Current Protect Resistor
	RY01, RY02	Relay
	TA	Indoor Temp Sensor
	TB01, TB02	Terminal Block
	TC1, TC2, TCJ	Temp Sensor
Sold Separately	DM	Drain Pump Motor
	FS	Float Switch

— — —	Field Wiring
⏚	Protective Earth
▭	Terminal Block
—○—	Terminal
⊂⊃	Connector
⋯	P.C. Board
———	Accessory

5. PARTS RATING

Model **MMD-UP**	**0721HP***	**0961HP***
Fan motor	ICF-340WD940-1	
Pulse motor valve	PAM-MD12TF-301	
TA sensor	Lead wire length:218mm	
TC1 sensor	∅4 size lead wire length:1000mm	
TC2 sensor	∅6 size lead wire length:1000mm	
TCJ sensor	∅6 size lead wire length:1000mm	

6. REFRIGERANT CYCLE DIAGRAM

Indoor unit

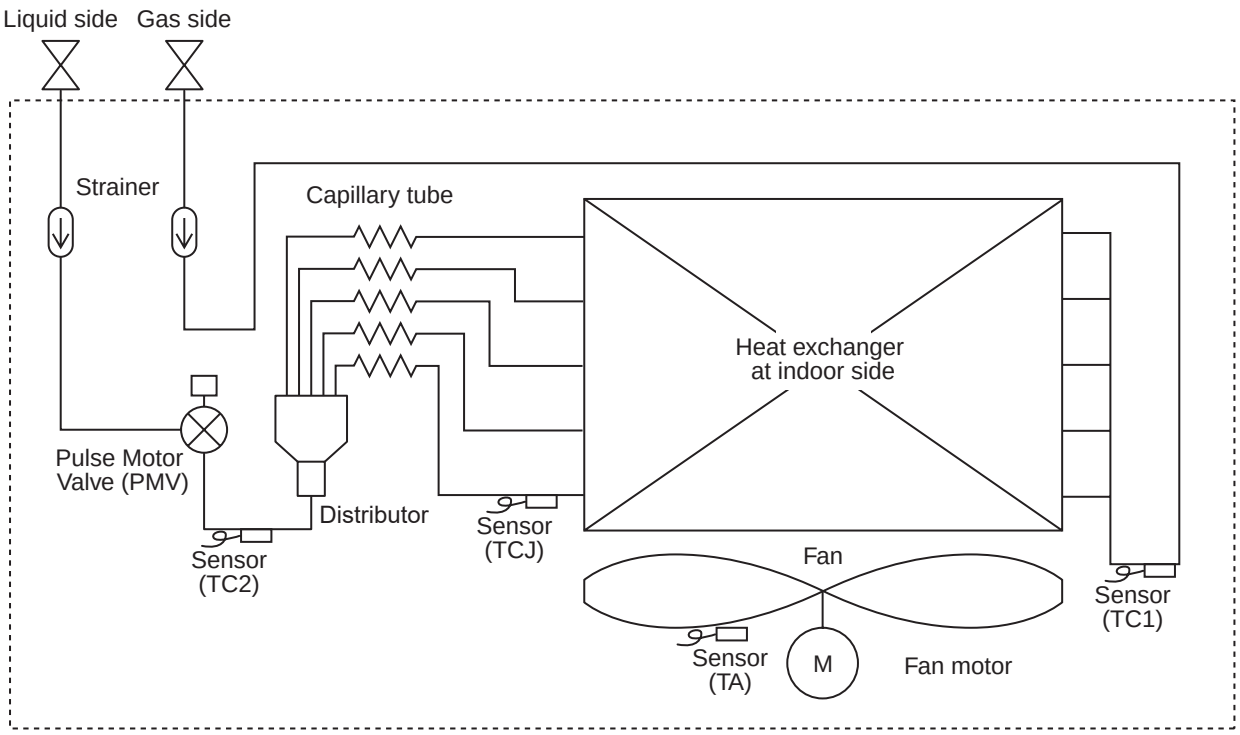

Explanation of functional parts in indoor unit

Functional part name		Functional outline
Pulse Motor Valve	PMV	(Connector CN082 (6P): Blue) 1) Controls super heat in cooling operation 2) Controls subcool in heating operation 3) Recovers refrigerant oil in cooling operation 4) Recovers refrigerant oil in heating operation
Temp. Sensor	1.TA	(Connector CN104 (2P): Yellow) 1) Detects indoor suction temperature
	2.TC1	(Connector CN100 (3P): Brown) 1) Controls PMV super heat in cooling operation
	3.TC2	(Connector CN101 (2P): Black) 1) Controls PMV subcool in heating operation
	4.TCJ	(Connector CN102 (2P): Red) 1) Controls PMV super heat in cooling operation

7. CONTROL OUTLINE

■ Indoor unit

Control specifications

<table>
<tr><th>NO.</th><th>Item</th><th>Specification outline</th><th>Remarks</th></tr>
<tr><td>1</td><td>Upon power supply reset</td><td>1. Identification of outdoor unit
When the power supply is reset, the outdoor unit is identified, and control is redirected according to the identification result.
2. Indoor fan speed and air flow direction control availability settings
Settings such as indoor fan speed and air flow direction control availability are replaced on the basis of EEPROM data.
3. If power supply reset is performed in troubles, the check code is cleared.
If the abnormality persists after the Start / Stop button on the remote controller is pressed to resume operation, the check code is redisplayed on the remote controller.</td><td></td></tr>
<tr><td>2</td><td>Operation selection</td><td>1. The operation mode changes in response to an operation selection command issued via the remote controller.
<table>
<tr><th>Remote controller command</th><th>Control outline</th></tr>
<tr><td>STOP</td><td>Air conditioner shutdown</td></tr>
<tr><td>FAN</td><td>Fan operation</td></tr>
<tr><td>COOL</td><td>Cooling operation</td></tr>
<tr><td>HEAT</td><td>Heating operation</td></tr>
</table></td><td>TS: Temperature setting
TA: Room temperature</td></tr>
<tr><td>3</td><td>Room temp. control</td><td>1. Adjustment range - remote controller temperature setting (°C)
<table>
<tr><th></th><th>COOL</th><th>HEAT</th></tr>
<tr><td>Wired type</td><td>18~29</td><td>18~29</td></tr>
<tr><td>Wireless type</td><td>18~30</td><td>16~30</td></tr>
</table>
2. In heating operation, the temperature setting may be fine-tuned via the DN code “06”.
<table>
<tr><td>SET DATA</td><td>0</td><td>2</td><td>4</td><td>6</td></tr>
<tr><td>Temperature setting adjustment</td><td>+0 ˚C</td><td>+2 ˚C</td><td>+4 ˚C</td><td>+6 ˚C</td></tr>
</table>
Factory default
<table>
<tr><th>Model type</th><th>SET DATA</th></tr>
<tr><td>Floor standing (standard, concealed, cabinet)</td><td>0</td></tr>
<tr><td>Other model</td><td>2</td></tr>
</table></td><td>Shift in heating suction temperature (not applicable to remote controller thermostat operation)</td></tr>
<tr><td>4</td><td>Automatic capacity control</td><td>The outdoor unit determines the operational capacities of indoor units according to the difference between TA and TS.
 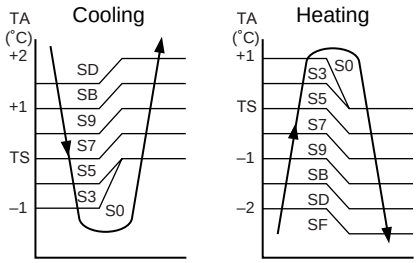
</td><td>TS: Temperature setting
TA: Room temperature</td></tr>
</table>

NO.	Item	Specification outline	Remarks
5	Fan speed control	1. The fan operates in one of the four speed modes of “HIGH (HH)”, “MED (H)”, “LOW (L)” and “AUTO” on the basis of a command issued via the remote controller. (Concealed duct high static pressure type: HH only) 2. In AUTO fan speed mode, the air speed changes according to the difference between TA and TS. **<Cooling>** 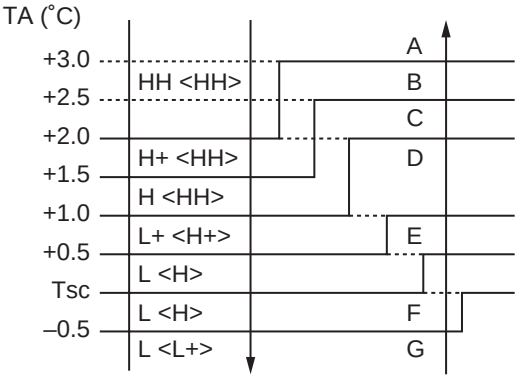 	HH > H+ > H > L+ > L > UL or LL
		• Control is identical in remote controller thermo and body thermo operation. Speed modes shown in < > apply to cooling operation under AUTO air conditioner operation mode. • In AUTO fan speed mode, the fan speed remains the same for 3 minutes each time a speed change occurs. However, a speed change command issued via the remote controller can override this, and the fan speed changes accordingly. • At the beginning of cooling operation, a higher speed (steeper downward temperature gradient) is chosen. • As long as the temperature difference remains on a boundary line, the fan speed stays the same.	DN code “32” “0000”: Body thermostat “0001”: Remote controller thermostat
		<Heating> 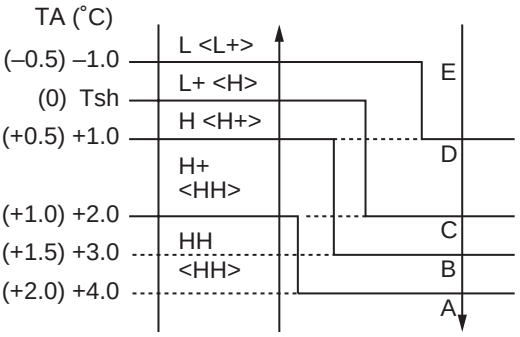 Figures inside ( ) applies to remote controller thermostat operation. Figures outside ( ) applies to body thermostat operation. Speed modes shown in < > apply to heating operation under AUTO air conditioner operation mode.	
		• In AUTO fan speed mode, the fan speed remains the same for 1 minute each time a speed change occurs. However, a speed change command issued via the remote controller can override this, and the fan speed changes accordingly. • At the beginning of heating operation, a higher speed (steeper upward temperature gradient) is chosen. • As long as the temperature difference remains on a boundary line, the fan speed stays the same.	TC2: Indoor heat exchanger sensor temperature
		• When TC2 ≥ 60 °C, the fan speed is raised by one step. 3. If the air conditioner goes thermostat OFF during heating operation, the fan speed drops down to LL (breeze).	“HEATING STANDBY ” displayed

NO.	Item	Specification outline	Remarks
6	Cold air discharge prevention control	1. In heating operation, the upper limit of the fan tap is set according to the lower of whichever is the higher between TC2 sensor and TCJ sensor temperatures, on the one hand, and TC1 sensor temperature, on the other. • If the fan continuously operates in zone B for 6 minutes, it automatically moves into zone C. • During defrosting, the control point is shifted by +6 °C. 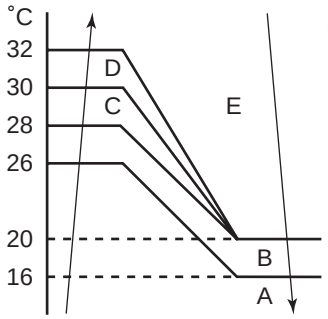 A zone: OFF B zone: 26˚C or above and below 28˚C breeze C zone: 28˚C or above and below 30˚C Low D zone: 30˚C or above and below 32˚C Medium E zone: High	TCJ: Indoor heat exchanger sensor temperature • In zones D and E, priority is given to the remote controller fan speed setting. • In zone A, "HEATING STANDBY " is displayed.
7	Freeze prevention control (low temp. release)	1. During cooling, the air conditioner is operated in the manner described below according to the temperature readings of the TC1, TC2 and TCJ sensors. • If zone J operation is detected for 5 minutes, the air conditioner is forced into thermostat OFF. • In zone K, the timer is put on pause, with the current timer count retained. • If zone I operation is detected, the timer count is cleared, and the air conditioner returns to normal operation. • If continuous zone J operation forces the air conditioner into thermostat OFF, the indoor fan is operated in breeze mode until it moves into zone I. The control is terminated under the following conditions: Termination conditions 1) TC1 ≥ 12 °C, TC2 ≥ 12 °C, and TCJ ≥ 12 °C 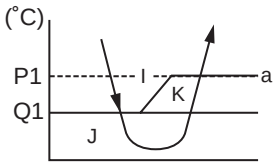 | | TC1 | TC2, TCJ | | P1 | 10˚C (5˚C) | –10˚C | | Q1 | 0˚C | –14˚C | 2) Passage of 20 minutes after stoppage 2. During cooling, the air conditioner is operated in the manner described below according to the temperature readings of the TC2 and TCJ sensors. • If zone M operation is detected for 45 minutes, the air conditioner is forced into thermo OFF. • In zone N, the timer is put on pause, with the current timer count retained. • When the air conditioner goes back into zone M, timer count is resumed from the retained value. 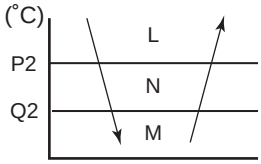 | | TC2, TCJ | | P2 | 5 | | Q2 | –2.0 | • If zone L operation is detected, the timer count is cleared, and the air conditioner returns to normal operation. Reset conditions 1) TC1 ≥ 12 °C, TC2 ≥ 12 °C and TCJ ≥ 12 °C 2) After 20 minutes elapsed from the stop.	TC1: Indoor heat exchanger sensor temperature * With models without TC2, TC2 is not part of the control parameters.

NO.	Item	Specification outline	Remarks
8	Cooling oil (refrigerant) recovery control	While the outdoor unit is recovering cooling oil (refrigerant), the indoor units perform the following control tasks: [common for operational (cooling thermostat ON / thermostat OFF / FAN), as well as nonoperational indoor units] 1) Open the indoor PMV to a certain degree. 2) Engage in recovery control for a specified period of time and return to normal cooling operation at the end of this period upon terminating the control. 3) Operate the drain pump throughout the recovery control period and for about 1 minute after it.	• Recovery operation normally takes place roughly every 2 hours. • The opening position of the indoor PMV depending on the type and capacity of the indoor unit.
9	Heating refrigerant (oil) recovery control	While the outdoor unit is recovering heating refrigerant (oil), the indoor units perform the following control tasks: 1) Open the indoor PMV to a certain degree. 2) Control the indoor fan according to the operation mode. [Indoor units operating in heating thermo ON / OFF state] Let the indoor fan continue operating, but turn it off if the temperature of the indoor heat exchanger drops. [Indoor units operating in FAN mode] Turn off the indoor fan and display “HEATING STANDBY ” on the remote controller. [Non-operational indoor units] Keep the indoor fan turned off. 3) Terminate the recovery operation depending on the TC2 temperature reading. The timing of termination is determined by each indoor unit. 4) Operate the indoor fan and drain pump for about 1 minute after the termination of the recovery operation. (Applicable to compact 4-way cassette type and 1- way cassette type)	• Recovery operation normally takes place roughly every hour. • The opening position of the indoor PMV depending on the type and capacity of the indoor unit.
10	Defrosting control	While the outdoor unit is engaged in defrosting control, the indoor units perform the following control tasks: 1) Open the indoor PMV to a certain degree. 2) Control the indoor fan according to the operation mode. [Indoor units operating in heating thermo ON / OFF state] Let the indoor fan continue operating for a while, but turn it off as the temperature of the indoor heat exchanger drops. [Indoor units operating in FAN mode] Let the indoor fan continue operating. [Non-operational indoor units] Keep the indoor fan turned off. 3) As defrosting control comes to an end, it gives way to heating refrigerant (oil) recovery control. (For control details, see “9. Heating refrigerant (oil) recovery control” above.)	• For defrosting commencement conditions, see 5 Control Outline “7. Defrosting control (reverse defrosting method)” in SMMS-e Outdoor Unit Service Manual SVM-15067 above. • The opening position of the indoor PMV depending on the type and capacity of the indoor unit.
11	Short intermittent operation compensation control	1. For 5 minutes after startup, the system is forced to continue operating even if it reaches the thermo OFF region. 2. However, priority is given to cooling / heating selection, operation standby, and protective control, so that there is no overriding of thermo OFF in these cases.	
12	Drain pump control	1. During cooling (including DRY operation), the drain pump is operated at all times. 2. If the float switch is activated while the drain pump is in operation, the drain pump continues operating, with the relevant check code displayed. 3. If the float switch is activated while the drain pump is turned off, thermo OFF is forced on the air conditioner, with the drain pump put into operation. If the float switch continues to be activated for about 5 minutes, the drain pump is turned off, with the relevant check code displayed.	Check code [P10] Drain pump kit TCB-DP40DE (Sold separately)
13	Elimination of residual heat	1. When the air conditioner is turned off after engaging in heating operation, the indoor fan is operated for about 30 seconds in “breeze” mode.	

<table>
<tr><th>NO.</th><th>Item</th><th>Specification outline</th><th>Remarks</th></tr>
<tr><td>14</td><td>Filter sign display
(not applicable to wireless type)</td><td>1. The indoor fan's cumulative hours of operation are counted, and when these exceed the prescribed value (2500H), a filter replacement signal is sent to the remote controller to display a filter sign on it.
2. When a filter reset signal is received from the remote controller, the timer measuring cumulative hours is cleared. If the prescribed hours have been exceeded, the hours count is reset, with the sign on the remote controller display erased.
<table><tr><td>Filter service life</td><td>2500H</td></tr></table></td><td>"FILTER ▦ " displayed</td></tr>
<tr><td>15</td><td>Operation standby
Heating standby</td><td><Operation standby> ..... Displayed on remote controller
1. When any of the DN codes listed below is displayed
• "P05" - Detection of an open phase in the power supply wiring
• "P10" - Detection of indoor flooding in at least one indoor unit
• "L30" - Detection of an interlock alarm in at least one indoor unit
2. Forced thermostat OFF
• "COOL / DRY" operation is unavailable because at least one indoor unit is operating in "HEAT" mode.
• "HEAT" operation is unavailable because at least one indoor unit is operating in "COOL / DRY" mode under priority cooling setting (bit 1 of SW11 on outdoor I/ F P.C. board ON).
3. All indoor units not able to engage in any of the above operations stand by in thermostat OFF state.
4. The indoor fan has been turned off because the system is engaged in a heat refrigerant (oil) recovery operation.
<Heating standby> ..... Displayed on remote controller
1. Normal thermostat OFF
• During heating, the indoor unit goes thermostat OFF as the heating temperature setting is reached.
2. During heating, the fan rotates at a breeze speed (UL or lower) or remains stationary to prevent cold air from being discharged (including defrosting operation).
3. Forced thermostat OFF
• "HEAT" operation is unavailable because at least one indoor unit is operating in "COOL / DRY" mode under priority cooling setting (bit 1 of SW11 on outdoor I/ F P.C. board ON).</td><td>• "OPERATION STANDBY ⏻ " displayed
No display provided on wireless remote controller

• "HEATING STANDBY ☼ " displayed</td></tr>
<tr><td>16</td><td>Selection of central control mode</td><td>1. The range of operations that can be performed via an indoor unit remote controller can be determined through the setting of the central controller.
2. Setting details
TCC-Link central control
<table><tr><th rowspan="2">Operation via TCCLink central control</th><th colspan="6">Operation on RBC-AMT32E</th><th rowspan="2">RBC-AMT32E display</th></tr><tr><th>Start / stop selection</th><th>Operation mode selection</th><th>Timer setting</th><th>Temperature setting</th><th>Fan speed setting</th><th>Air flow direction setting</th></tr><tr><td>Individual</td><td>○</td><td>○</td><td>○</td><td>○</td><td>○</td><td>○</td><td rowspan="5">"CENTRAL CONTROL IN PROGRESS"</td></tr><tr><td>Central 1</td><td>×</td><td>○</td><td>×</td><td>○</td><td>○</td><td>○</td></tr><tr><td>Central 2</td><td>×</td><td>×</td><td>×</td><td>×</td><td>○</td><td>○</td></tr><tr><td>Central 3</td><td>○</td><td>×</td><td>○</td><td>×</td><td>○</td><td>○</td></tr><tr><td>Central 4</td><td>○</td><td>×</td><td>○</td><td>○</td><td>○</td><td>○</td></tr></table>(○ : Accessible ×: Inaccessible)</td><td>• In the case of a wired remote controller, "CENTRAL CONTROL IN PROGRESS " is displayed (lit up) while in central control mode.
• The display blinks when a control function inaccessible to a remote controller is chosen.
• A wireless remote controller has the same set of control functions, although there is no display. When a control operation is performed via a wireless remote controller while in central control mode, a peep sound alert (5 times) is provided.</td></tr>
</table>

NO.	Item	Specification outline	Remarks
17	DC motor	1) When the fan operation has started, positioning of the stator and the rotor are performed. (Moves slightly with tap sound) 2) The motor operates according to the command from the indoor controller. **Notes)** • When a fan lock is found, the air conditioner stops, and an check code is displayed. • If static pressure of the used duct does not match with the setup value of static pressure, which was decided in the static pressure setting code No.[5D], the air conditioner may stop or check code may be displayed.	Check code “P12”
18	Power saving mode	1. Push the SAVE button on the remote controller 2. The “ ” segment lights up on the wired remote controller display. 3. The requirement capacity ratio is limited to approximately 75 %. 4. If the power saving operation is enabled, the settings are retained when the operation is stopped, when the mode is changed, or when the power is reset. The power saving operation will be enabled the next time the operation starts.	The power saving operation cannot be set by the wireless remote controller or wired remote controller of AMT31E or older.
19	Frequency fixed operation (Test run)	**<In case of wired remote controller>** 1) When pushing [CHK] button for 4 seconds or more, [TEST] is displayed on the display screen and the mode enters in Test run mode. 2) Push [ON/OFF] button. 3) Using [MODE] button, set the mode to [COOL] or [HEAT]. • Do not use other mode than [COOL]/[HEAT] mode. • During test run operation, the temperature cannot be adjusted. • Check code is detected as usual. • A frequency fixed operation is performed. 4) After the test run, push [ON/OFF] button to stop the operation. (Display in the display part is same as the procedure in Item 1.) 5) Push [CHK] button to clear the test run mode. ([TEST] display in the display part disappears and the status returns to the normal stop status.) **<In case of wireless remote controller>** 1) When TEMPORARY button is pushed for 10 seconds or more, “Pi!” sound is heard and the operation changes to test run. After approx. 3 minutes, a cooling operation starts forcedly. Check cool air starts blowing. If the operation does not start, check wiring again. 2) To stop a test operation, push TEMPORARY button once again (Approx. 1 second). Check wiring / piping of the indoor and outdoor units in test run. 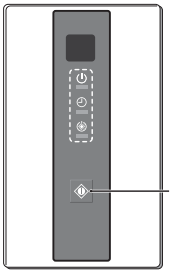 TEMPORARY button	Command frequency is approximately [S7]

8. APPLIED CONTROL AND FUNCTIONS (INCLUDING CIRCUIT CONFIGURATION)

8-1. Indoor controller block diagram

8-1-1. In Case of Connection of Wired (Simple) Remote Controller

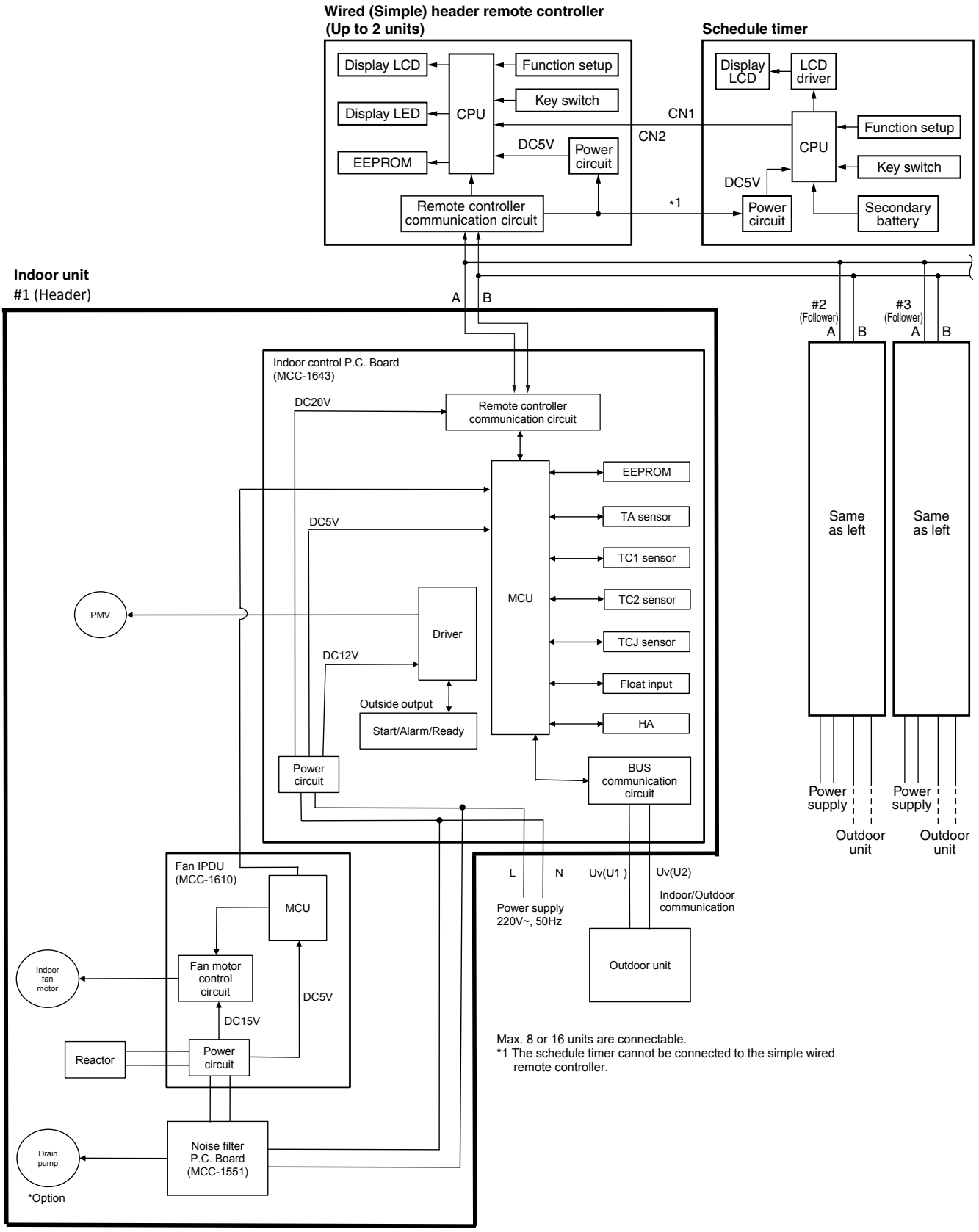

8-1-2. In Case of Connection of Wireless Remote Controller

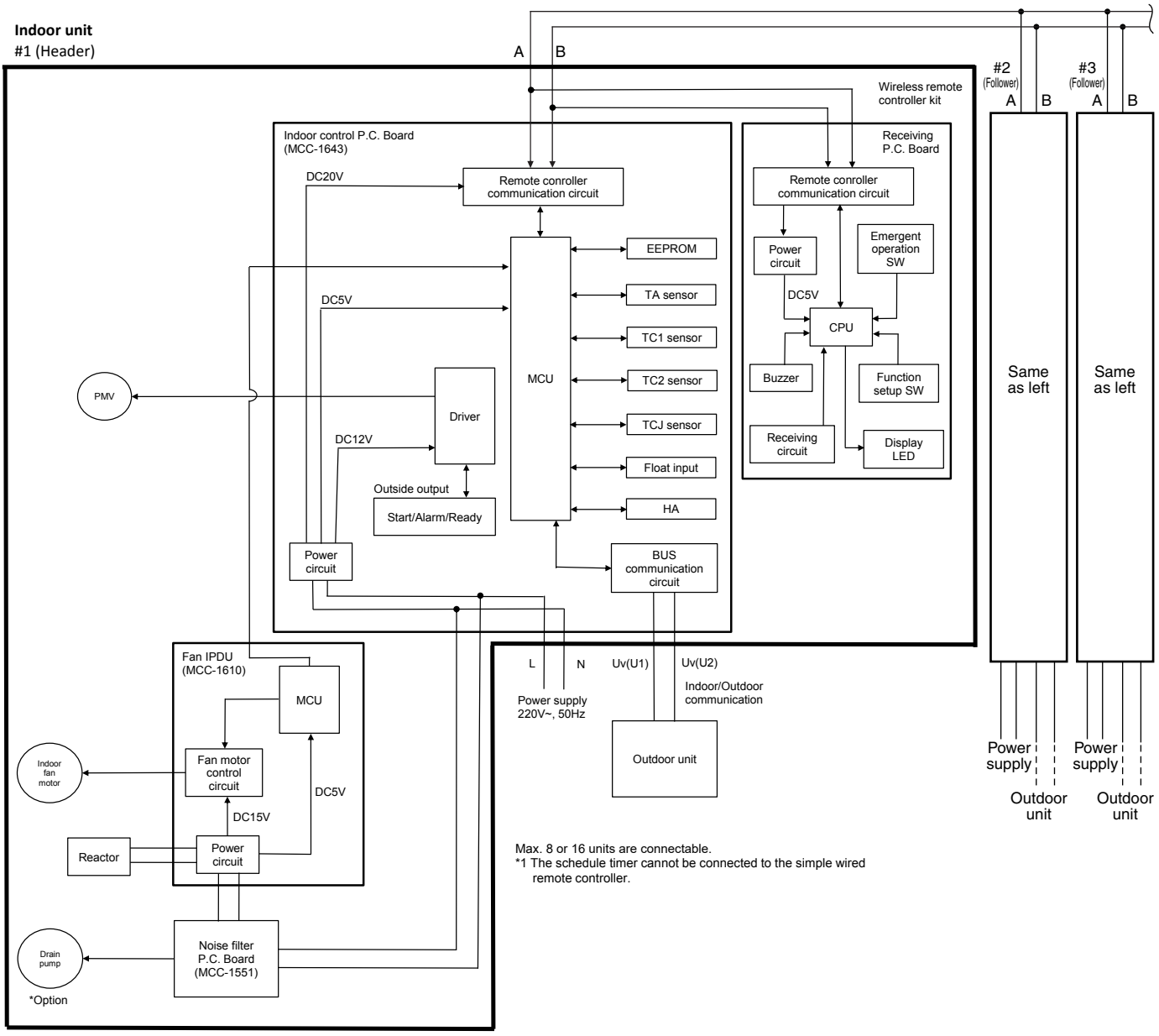

8-1-3. Connection of Both Wired (Simple) Remote Controller and Wireless Remote Controller

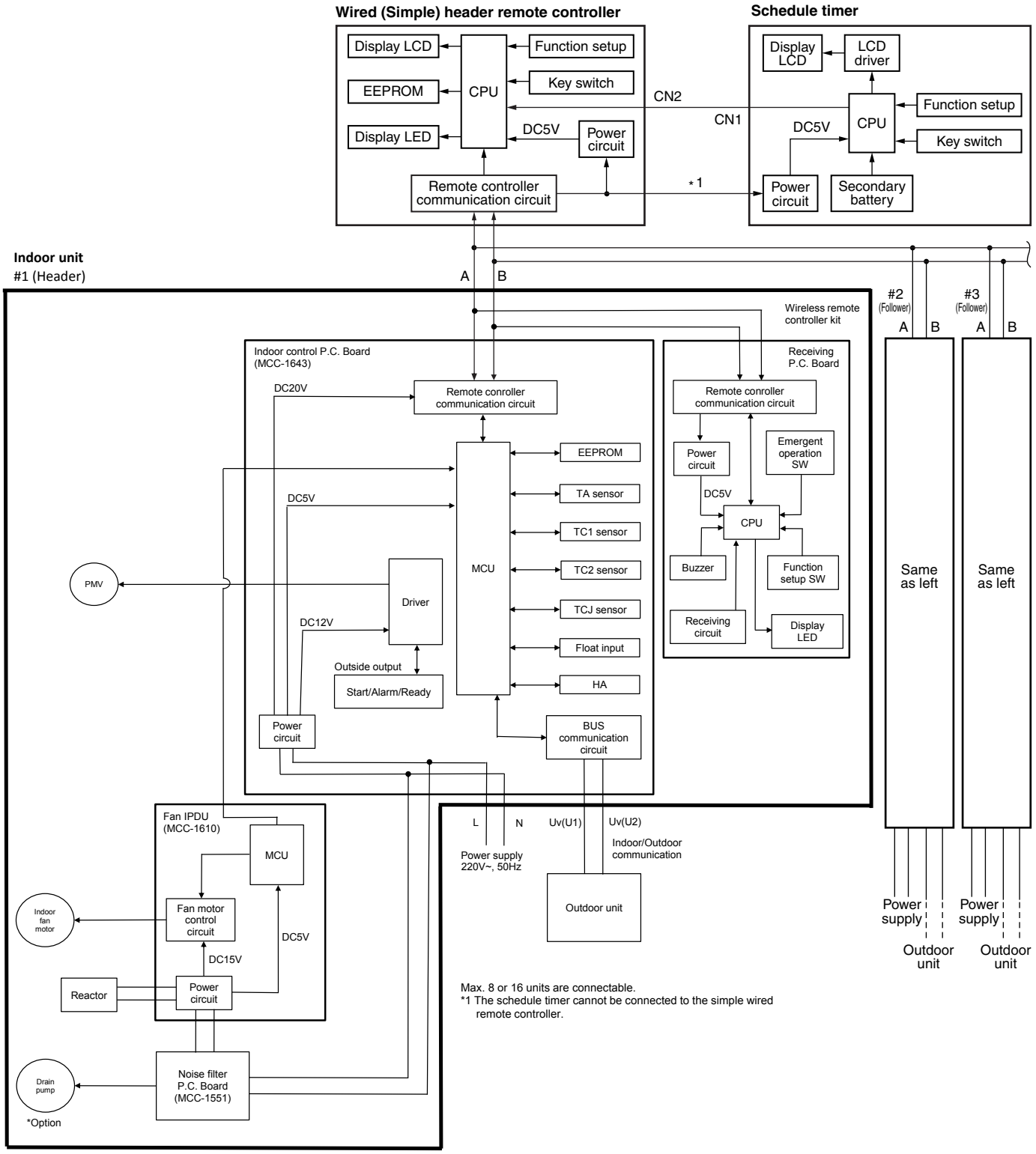

8-2. Indoor Print Circuit Board

MCC-1643

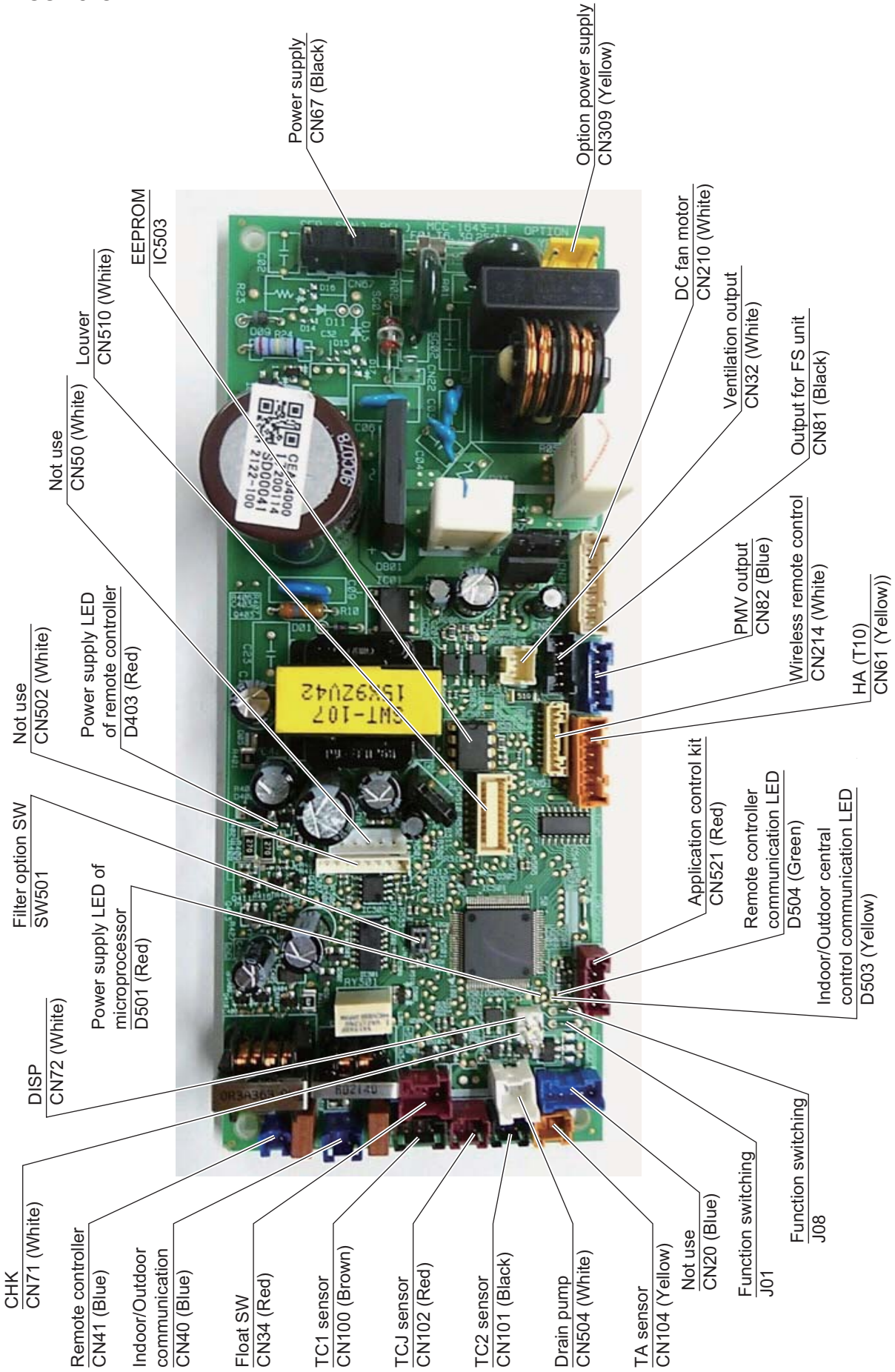

8-2-1. Optional connector specifications of indoor P.C. board (MCC-1643)

Connector No.	Color	Function	Concealed Duct High Static Pressure	Pin No.	Specifications	Remarks
CN32	White	Ventilation output	○	① ②	DC12V Output (Open collector)	Setting at shipment: Interlock of ON by indoor unit operation, with OFF by stop operation * The single operation setting by FAN button on the remote controller is performed on the remote controller (DN=31).
CN34	Red	Input for float SW	●	① ② ③	DC12V NC Float SW input	Normal when between ①–③ short-circuits, but abnormal when open-circuits. (check code "P10" appears)
CN61	Yellow	HA	○	① ② ③ ④ ⑤ ⑥	ON/OFF input 0V（COM） Remote controller prohibited input Operation output (Open collector) DC12V（COM) Warning output (Open collector)	HA ON/OFF input (J01: YES/NO=Pulse (At shipment from factory) /Static input selection) Permission/Prohibition of remote controller operation stop is performed by input. Operation ON (Answer back of HA) Warning output ON
CN71	White	CHK Operation check	○	① ②	Check mode input 0V	This check is used to check indoor operation. (Performs operation of indoor fan “H” , Louver horizontal and Drain pump ON without communication with outdoor and remote controller)
CN72	White	DISP Exhibition mode	○	① ②	DISP mode input 0V	Communication is available by indoor unit and remote controller only (When the power is turned on). Shortening time of timer (Always)
CN81	Black	Output for Flow selector unit	△	① ② ③ ④ ⑤	DC12V EP valve output (Open collector) Balance valve output (Open collector) Suction valve output (Open collector) Discharge valve output (Open collector)	
CN309	Yellow	Output power supply for option	○	① ③	AC230V AC230V	This can be used as power supply for option devices.
CN521	Red	Connection for option P.C.board	△	① ② ③ ④ ⑤	DC12V DC5V Send Receive 0V	Connected Application control kit (TCB-PCUC2E)

● : Use in standard, ○ : Available, △ : Use by connecting parts sold separately, × : Unavailable

* To use the functions operated by CN60, CN80, CN70 and CN73, which are provided for other P.C.board, use the Application control kit (TCB-PCUC2E) sold separately.

8-2-2. Fan IPDU P.C. Board (MCC-1610)

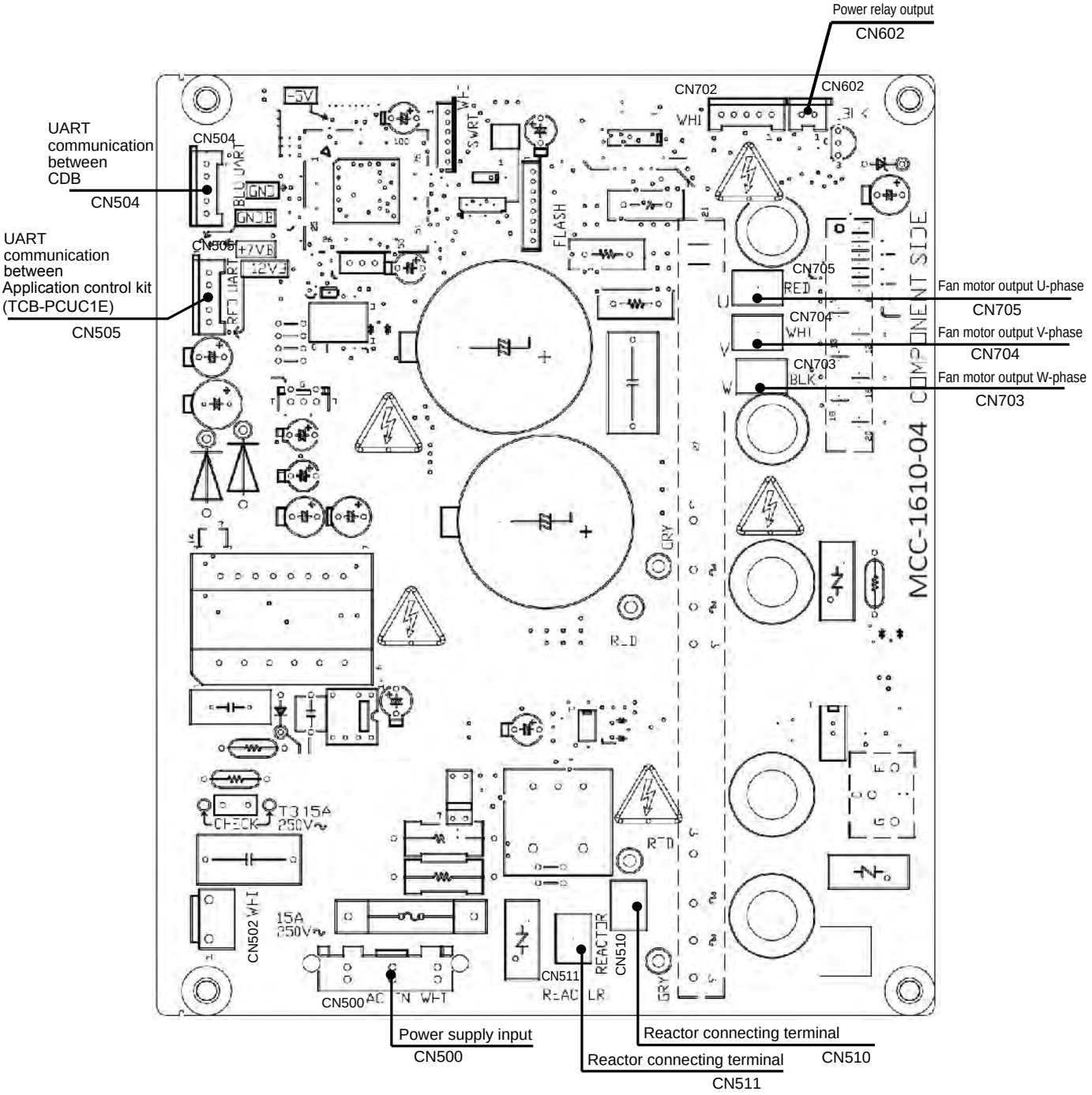

8-2-3. Noise filter (MCC-1551)

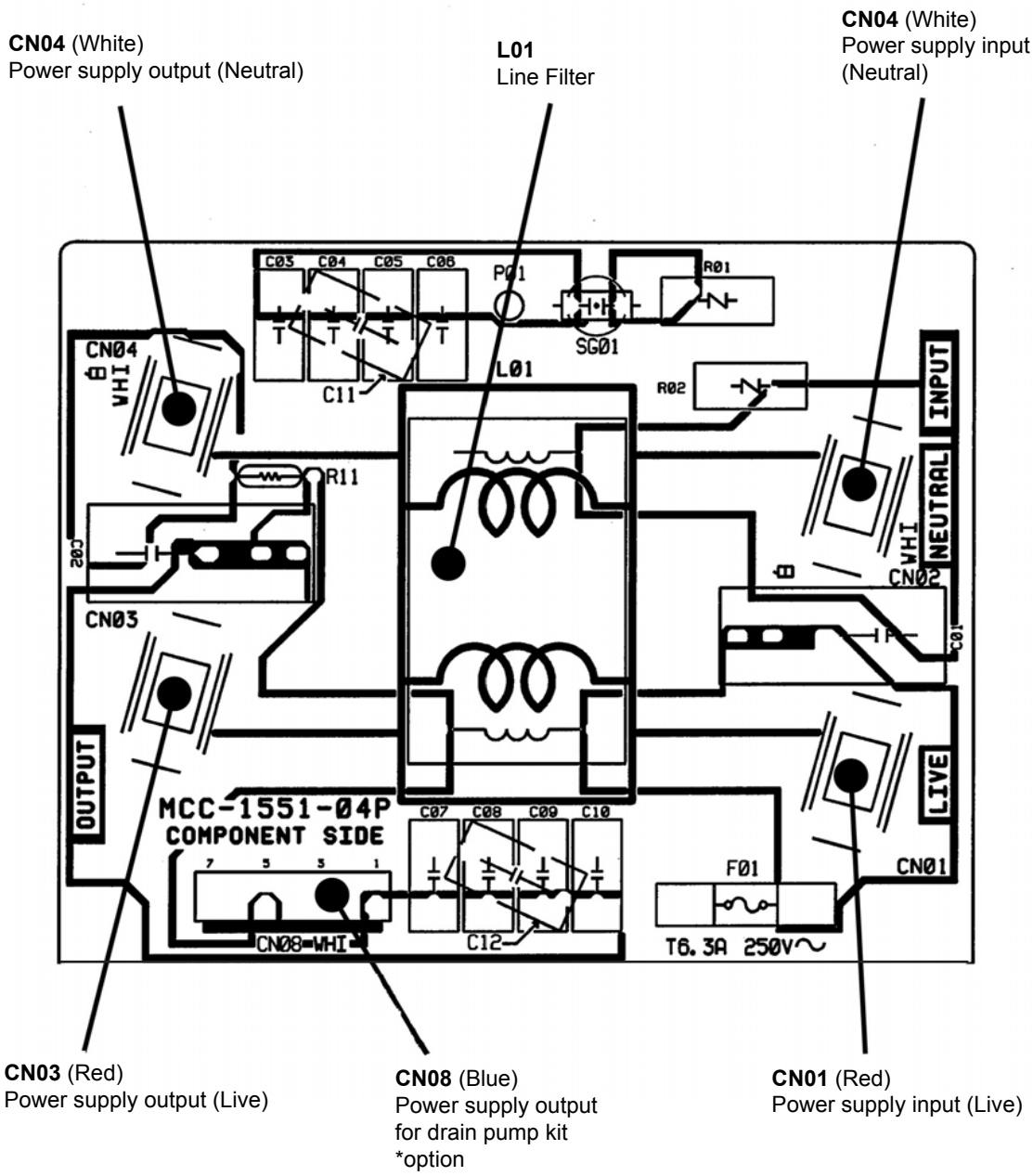

8-3. Test run of indoor unit

■ Cooling/Heating test run check

The test run for cooling/heating can be performed from either indoor remote controller or outdoor interface ” ˆ C. board. Refer to the Installation Manual and Service Manual of outdoor unit for the procedure of the test run from an outdoor interface P.C. board.

◆ In case of wired remote controller

<RBC-AMT∗∗∗>

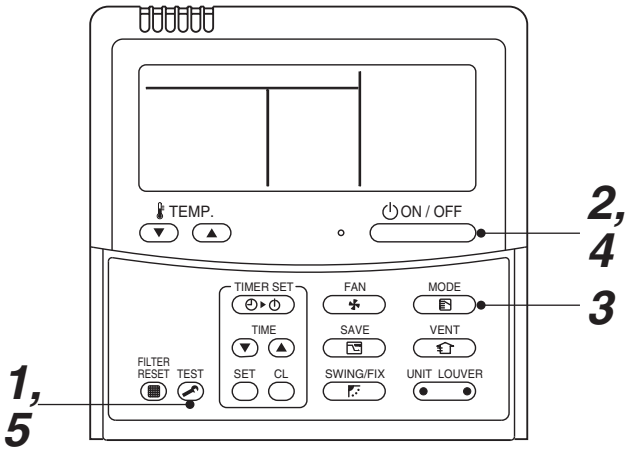

Procedure	Operation contents
1	Push [TEST] button for 4 seconds or more. [TEST] is displayed at the display part and the mode enters in TEST mode. 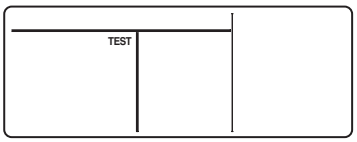
2	Push [ON/OFF] button.
3	Change the mode from [COOL] to [HEAT] using [MODE] button. • Do not use [MODE] button for other mode except [COOL]/[HEAT] modes. • The temperature cannot be adjusted during test run. • The trouble detection is performed as usual. 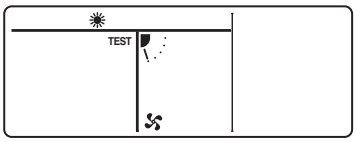
4	After test run, push [ON/OFF] button to stop the operation. (Display on the display part is same to that in Procedure **1** .)
5	Push [TEST] button to clear the TEST mode. ([TEST] display in the display part disappears and status becomes the normal stop status.) 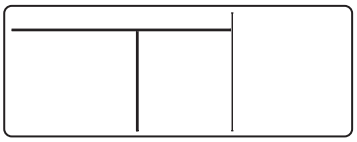

Note) The test run returns to the normal operation after 60 minutes.

<RBC-ASCU11-∗>

Be sure to stop the air conditioner before making settings.

(Change the setup while the air conditioner is not working.)

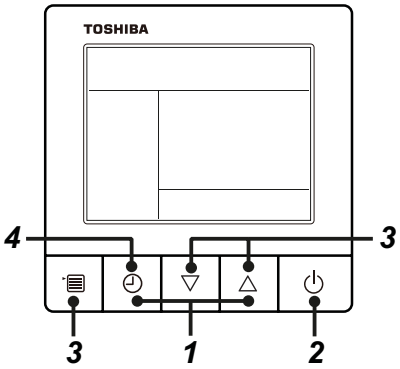

1 **Push and hold OFF timer button and [△] setting button simultaneously for 10 seconds or more. [TEST] is displayed on the display part and the test run is permitted.**

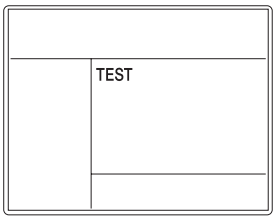

2 **Push ON/OFF button.**

3 **Push menu button to select the operation mode. Select [❄ Cool] or [☼ Heat] with [▽] [△] setting button.**

- Do not run the air conditioner in a mode other than [Cool] or [Heat].
- The temperature setting function does not work during test run.
- The check code is displayed as usual.

4 **After the test run, push OFF timer button to stop a test run.**

([TEST] disappears on the display and the air conditioner enters the normal stop mode.)

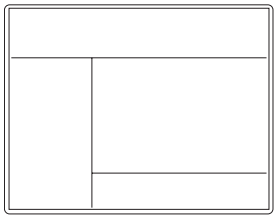

◆ In case of wireless remote controller

1 Turn on the power of the air conditioner.
When power is turned on for the first time after installation, it takes approx. 5 minutes until the remote controller becomes available. In the case of subsequent power-on, it takes approx. 1 minute until the remote controller becomes available.
Execute a test run after the predetermined time has passed.

2 Push “ON/OFF” button on the remote controller, select [Cool] or [Heat] with “MODE” button, and then select [HIGH] with “FAN” button.

3

Cooling test run	Heating test run
Set the temperature to 17 ˚C with the temp. setup buttons.	Set the temperature to 30 ˚C with the temp. setup buttons.

4

Cooling test run	Heating test run
After confirming a signal receiving sound “beep” immediately set the temperature to 18 ˚C with the temp. setup buttons.	After confirming a signal receiving sound “beep” immediately set the temperature to 29 ˚C with the temp. setup buttons.

5

Cooling test run	Heating test run
After confirming a signal receiving sound “beep” immediately set the temperature to 17 ˚C with the temp. setup buttons.	After confirming a signal receiving sound “beep” immediately set the temperature to 30 ˚C with the temp. setup buttons.

6 Repeat procedures ***4 → 5 → 4 → 5***.
Indicators “Operation” (green), “Timer” (green), and “Ready” (orange) in the wireless receiver section flash in approx. 10 seconds, and the air conditioner starts operation. If any of these indicators does not flash, repeat procedures 2 to 5.

7 Upon completion of the test run, push “ON/OFF” button to stop operation.

<Overview of test run operations using the wireless remote controller>

▼ Cooling test run:
ON/OFF → 17 °C → 18 °C → 17 °C → 18 °C → 17 °C → 18 °C → 17 °C → (test run) → ON/OFF

▼ Heating test run:
ON/OFF → 30 °C → 29 °C → 30 °C → 29 °C → 30 °C → 29 °C → 30 °C → (test run) → ON/OFF

■ Check function for operation of indoor unit (Functions at indoor unit side)

This function is provided to check the operation of the indoor unit singly without communication with the remote controller or the outdoor unit. This function can be used regardless of operation or stop of the system. However, if using this function for a long time, a trouble of the equipment may be caused. Limit using this function within several minutes.

[How to operate]

1) Short-circuit CHK pin (CN71 on the indoor P.C. board).
   The operation mode differs according to the indoor unit status in that time.
   Normal time: Both float SW and fan motor are normal.
   Abnormal time: Either one of float SW or fan motor is abnormal.
2) Restricted to the normal time, if short-circuiting DISP pin (CN72 on the indoor P.C. board) in addition to short-circuit of CHK pin (CN71 on the indoor P.C. board), the minimum opening degree (30 pls) can be set to the indoor PMV only.
   When open DISP pin, the maximum opening degree (1500 pls) can be obtained again.
   - For the detailed positions of CHK pin (CN71 on indoor P.C. board) and DISP pin (CN72 on indoor P.C. board),
     refer to the indoor P.C. board.

[How to clear]

Open CHK pin. While the system is operating, it stops once but automatically returns to operation after several minutes.

	Short-circuit of CHK pin		
	Normal time		Abnormal time
	DISP pin open	DISP pin short circuit	
Fan motor	(H)	(H)	Stop
Indoor PMV (*)	Max. opening degree (1500 pls)	Min. opening degree (30 pls)	Min. opening degree (30 pls)
Drian pump	ON	ON	ON
Communication	All ignored	All ignored	All ignored
P.C. board LED	Lights	Lights	Flashes

* The actual indoor PMV opening degree may differ from the described values due to adjustment depending on PMV types.

- To exchange the indoor PMV coil, set the indoor PMV to Max. opening degree.

8-4. Method to set indoor unit function DN code

(When performing this task, be sure to use a wired remote controller.)

◆ Procedure

Be sure to stop the air conditioner before making settings

<RBC-AMT∗∗∗>

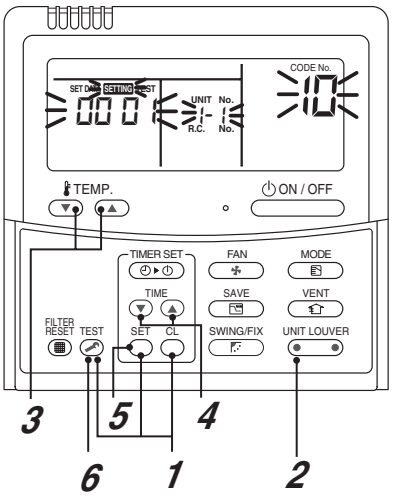

1 **Push the TEST + SET + CL buttons simultaneously and hold for at least 4 seconds.**
The unit No. displayed first is the address of the header indoor unit in group control.
Then the fan and louver of the selected indoor unit move.

2 **Each time the UNIT LOUVER button (left side of the button) is pressed, one of the indoor unit Nos. under group control is displayed in turn. Then the fan and louver of the selected indoor unit move.**

3 **Use the TEMP. button to select the CODE No. (DN code) of the desired function.**

4 **Use the TIME button to select the desired SET DATA associated with the selected function.**

5 **Push the SET button. (The display changes from flashing to steady.)**
- To change the selected indoor unit, go back to step ***2***.
- To change the selected function, go back to step ***3***.

6 **When the SET button is pushed, the system returns to normal off state.**

<RBC-ASCU11-∗>

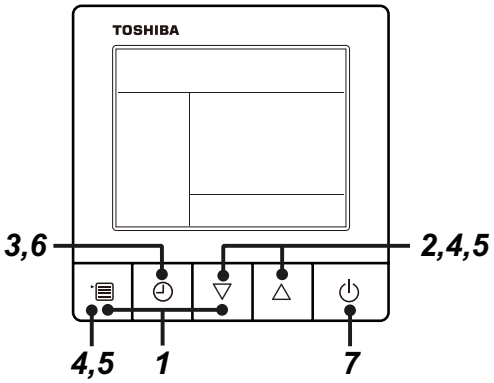

1 **Push and hold menu button and [▽] setting button simultaneously for 10 seconds or more.**
- After a while, the display flashes as shown in the figure. “ALL” is displayed as indoor unit numbers during initial communication immediately after the power has been turned on.

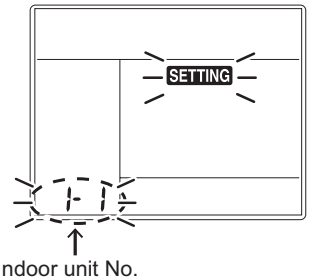

Indoor unit No.

2 **Each time [▽] [△] setting button is pushed, indoor unit numbers in the group control change cyclically. Select the indoor unit to change settings for.**
- The fan of the selected indoor unit runs . The indoor unit can be confirmed for which to change settings.

3 **Push OFF timer button to confirm the selected indoor unit.**

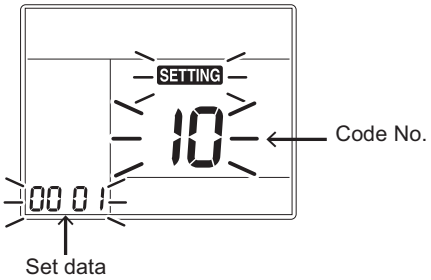

4 **Push the menu button to make Code No. [∗∗] flash. Change Code No. [∗∗] with [▽] [△] setting button.**

5 **Push the menu button to make Set data [∗∗∗∗] flash. Change Set data [∗∗∗∗] with [▽] [△] setting button.**

6 **Push OFF timer button to complete the set up.**

- To change other settings of the selected indoor unit, repeat from Procedure ***4***.

7 **When all the settings have been completed, push ON/OFF button to finish the settings. (Return to the normal mode)**

" SETTING " flashes and then the display content disappears and the air conditioner enters the normal stop mode. (The remote controller is unavailable while " SETTING " is flashing.)

- To change settings of another indoor unit, repeat from Procedure ***1***.

Indoor unit function Code No. (DN Code) table

(includes functions needed to perform applied control on site)

DN	Item	Description	At shipment
01	Filter display delay timer	0000: None 0001: 150H 0002: 2500H 0003: 5000H 0004: 10000H	Depending on model type
02	Dirty state of filter	0000: Standard 0001: High degree of dirt (Half of standard time)	0000: Standard
03	Central control address	0001: No.1 unit to 0064: No.64 unit … TCC-LINK 0001: No.1 unit to 0128: No.128 unit … TU2C-LINK 00Un: Unfixed (When using U series remote controller) 0099: Unfixed (Other than U series remote controller)	00Un/0099: Unfixed *1
04	Specific indoor unit priority	0000: No priority 0001: Priority	0000: No priority
06	Heating temp. shift	0000: 0 °C 0001: +1 °C 0002: +2 °C to 0010: +10 °C (Up to +6 recommended)	Depending on model type
0b	Demand control (CN73 / CN4)	0000: Demand input 0001: O2 sensor input 0002: Card input setup.3 0003: Fire alarm input (Normal open) 0004: Card input setup.4 0005: Fire alarm input (Normal close) 0006: Notice cord (202) 0008: Card input setup.1 0007: Card input setup.5 0009: Card input setup.2	0000: Demand input
0d	Existence of [AUTO] mode	0000: Provided 0001: Not provided (Automatic selection from connected outdoor unit)	0001: Not provided
0F	Cooling only	0000: Heat pump 0001: Cooling only (No display of [AUTO] [HEAT])	0000: Heat pump
10	Type	Refer to **Type DN code "10" list**	Depending on model type
11	Indoor unit capacity	0000: Unfixed 0001 to 0034 Refer to Indoor Unit Capacity DN code "11" list	According to capacity type
12	Line address	0001: No.1 unit to 0064: No.30 unit … TCC-LINK 0001: No.1 unit to 0128: No.128 unit … TU2C-LINK 00Un: Unfixed (When using U series remote controller) 0099: Unfixed (Other than U series remote controller)	00Un/0099: Unfixed *1
13	Indoor unit address	0001: No.1 unit to 0064: No.64 unit … TCC-LINK 0001: No.1 unit to 0128: No.128 unit … TU2C-LINK 00Un: Unfixed (When using U series remote controller) 0099: Unfixed (Other than U series remote controller)	00Un/0099: Unfixed *1
14	Group address	0000: Individual 0001: Header unit of group 0002: Follower unit of group 00Un: Unfixed (When using U series remote controller) 0099: Unfixed (Other than U series remote controller)	00Un/0099: Unfixed *1
19	Louver type (Air direction adjustment)	0000: No louver 0001: Swing only 0004: (4-way Air Discharge Cassette type, etc.)	Depending on model type
1E	Temp difference of [AUTO] mode selection COOL → HEAT, HEAT → COOL	0000: 0 °C to 0010: 10 °C (Ts ± 5°C) Ts:Remote controller setup temp.	0003: 3 °C (Ts ±1.5 °C)
28	Automatic restart of power failure	0000: None 0001: Restart	0000: None 0001: Restart (-T model only)
2A	Selection of option/Trouble input (TCB-PCUC2E: CN3)	0000: Filter input 0001: Alarm input 0002: None (Air washer, etc.)	0002: None
2E	HA terminal (CN61) select	0000: Usual 0001: Card input setup.1 (3) 0002: Fire alarm input (arbiter contact) 0003: Card input setup.2 (4) 0004: Notice cord (201) 0005: Card input setup.5	0000: Usual (HA terminal)
31	Ventilating fan control	0000: Unavailable 0001: Available	0000: Unavailable
32	TA sensor selection	0000: Body TA sensor 0001: Remote controller sensor	0000: Body TA sensor

DN	Item	Description	At shipment
33	Temperature unit select	0000: °C 0001: °F	0000: °C
5d	External static pressure High-ceiling adjustment (Air flow selection)	Refer to page 41.	Depending on model type
60	Timer setting (wired remote controller)	0000: Available (can be performed) 0001: Unavailable (cannot be performed)	0000: Available
77	Dual set point	0000: Unavailable 0002: Available	0000: Unavailable
79	Alarm output setup of the header unit	0000: Not including the state of following unit 0001: Including the state of following unit	0000: Not including the state of following unit
b3	Soft cooling	0000: Unavailable 0001: Available	0001: Available
b5	Occupancy sensor/ Wireless Remote controller Provided / None	0000: None 0001: Occupancy sensor provided 0002: Wireless remote controller provided	0000: None
b6	Occupancy sensor Enable / Invalid (Absence time judgment time)	0000: Invalid 0001: 30min. 0002: 60min. 0004: 120min. 0005: 150min.	0002: Enable (60 min.)
b7	Occupancy sensor operation at absent time	0000: Stand by 0001: operation stop	0000: Stand by
CF	4-way cassette type model name	0000: Standard Model 0001: larger case model	Depending on model type
d0	Whether the power saving mode can be set by the remote controller	0000: Invalid 0001: Valid	0001: Valid
E0	Destination	0000: Japan 0003: China 0004: Global	0003: China
E6	Wireless remote controller A-B selection	0000: A 0001: B	0000: A
F0	Swing mode	0000 : Out of sync swing 0001 : 4-way sync swing 0002 : Dual swing 0003 : Cycle swing	0000: Not including 4-way 0001: 4-way (Compact)
F1	Louver fixed position (Louver No.1)	0000 : Release 0001 : Horizontal discharge position 0005 : Downward discharge position	0000: Not fixed
F2	Louver fixed position (Louver No.2)	0000 : Release 0001 : Horizontal discharge position 0005 : Downward discharge position	0000: Not fixed
F3	Louver fixed position (Louver No.3)	0000 : Release 0001 : Horizontal discharge position 0005 : Downward discharge position	0000: Not fixed
F4	Louver fixed position (Louver No.4)	0000 : Release 0001 : Horizontal discharge position 0005 : Downward discharge position	0000: Not fixed
F6	Presence of Application control kit (TCB-PCUC2E)	0000: None 0001: Exist	0000: None
FC	Communication protocol *2	0000 : TCC-LINK 0003:TU2C-LINK	0000: TCC-LINK
Fd	Priority operation mode (FS unit)	0000: Heating 0001: Cooling	0000: Heating
FE	FS unit address	0001: No.1 unit to 0064: No.64 unit … TCC-LINK 0001: No.1 unit to 0128: No.128 unit … TU2C-LINK 00Un: Unfixed (When using U series remote controller) 0099: Unfixed (Other than U series remote controller)	00Un/0099: Unfixed *1

DN	Item	Description	At shipment
180	Notice code number 01	0000: None 0001 ~ 0255 : Notice code 0129 : Notice code (201) 0130 : Notice code (202) (0001 ~ 0255 : TU2C-LINK only)	0000: None
181	Notice code number 02		0000: None
182	Notice code number 03		0000: None
183	Notice code number 04		0000: None
184	Notice code number 05		0000: None
185	Notice code number 06		0000: None
186	Notice code number 07		0000: None
187	Notice code number 08		0000: None
188	Notice code number 09		0000: None
189	Notice code number 10		0000: None
103	Remote controller	0000 : Use 0001 : Do not use	0000 : Use
1FB	Central device control state	0000: No central device control (Remote controller use is possible) 0001: Central device control (Remote controller use is impossible)	0000: No central device control
1FC	Indoor Unit terminating resistance	0000: OFF 0001: ON	0000: OFF

*1 Display order of “00Un”and “0099” varies depending on remote controller models or communication types.

For Central control address (DN [03]), Indoor unit address (DN [13]), FS unit address (DN [FE])

Remote controller	Communication type	Display order
U series	TU2C-LINK	··· ⇔ 0128 ⇔ 00Un ⇔ 0001 ⇔ ···
	TCC-LINK	··· ⇔ 0064 ⇔ 00Un ⇔ 0001 ⇔ ···
Other than U series	TCC-LINK	··· ⇔ 0064 ⇔ 0099 ⇔ 0001 ⇔ ···

For Line address (DN [12])

Remote controller	Communication type	Display order
U series	TU2C-LINK	··· ⇔ 0128 ⇔ 00Un ⇔ 0001 ⇔ ···
	TCC-LINK	··· ⇔ 0030 ⇔ 00Un ⇔ 0001 ⇔ ···
Other than U series	TCC-LINK	··· ⇔ 0030 ⇔ 0099 ⇔ 0001 ⇔ ···

For Group address (DN [14])

Remote controller	Communication type	Display order
U series	TU2C-LINK TCC-LINK	··· ⇔ 0002 ⇔ 00Un ⇔ 0000 ⇔ ···
Other than U series	TCC-LINK	··· ⇔ 0002 ⇔ 0099 ⇔ 0000 ⇔ ···

*2 Communication protocol can be automatically switched with the setup in the outdoor unit during installation.

[5d] External

Concealed Duct High static pressure type

UP0721-0961 Series

Set data	0000	0001	0002	0003	0004	0005	0006
External static pressure	150 Pa	50 Pa	83 Pa	217 Pa	117 Pa	183 Pa	250 Pa
	(Factory default)	-	-	-	-	-	-

Type
DN code "10"

Value	Type	Model
06	Concealed Duct High static pressure type	MMD-UP072*, 0961*

Indoor Unit Capacity
DN code "11"

Value	Capacity
21	0721
23	0961

8-5. Applied control of indoor unit

■ Control system using Remote location ON/OFF control box (TCB-IFCB-4E2)

Wiring and setting

- In the case of group control, the control system functions as long as it is connected to one of the indoor units (control P.C. board) in the group. If it is desired to access the operation and trouble statuses of other units, relevant signals must be brought to it from those units individually.

1. Control items

(1) Start / Stop input signal	Start / stop of unit
(2) In-operation signal	Output present while unit in normal operation
(3) Check code Output	present while alarm (e.g. serial communication trouble or operation of protective device for indoor / outdoor unit) being activated

2. Wiring diagram of control system using Remote location ON/OFF control box (TCB-IFCB-4E2)

Input IFCB-4E2: No-voltage ON / OFF serial signal
Output No-voltage contact (in-operation and check code indication)
Contact capacity: Max. AC 240 V, 0.5 A

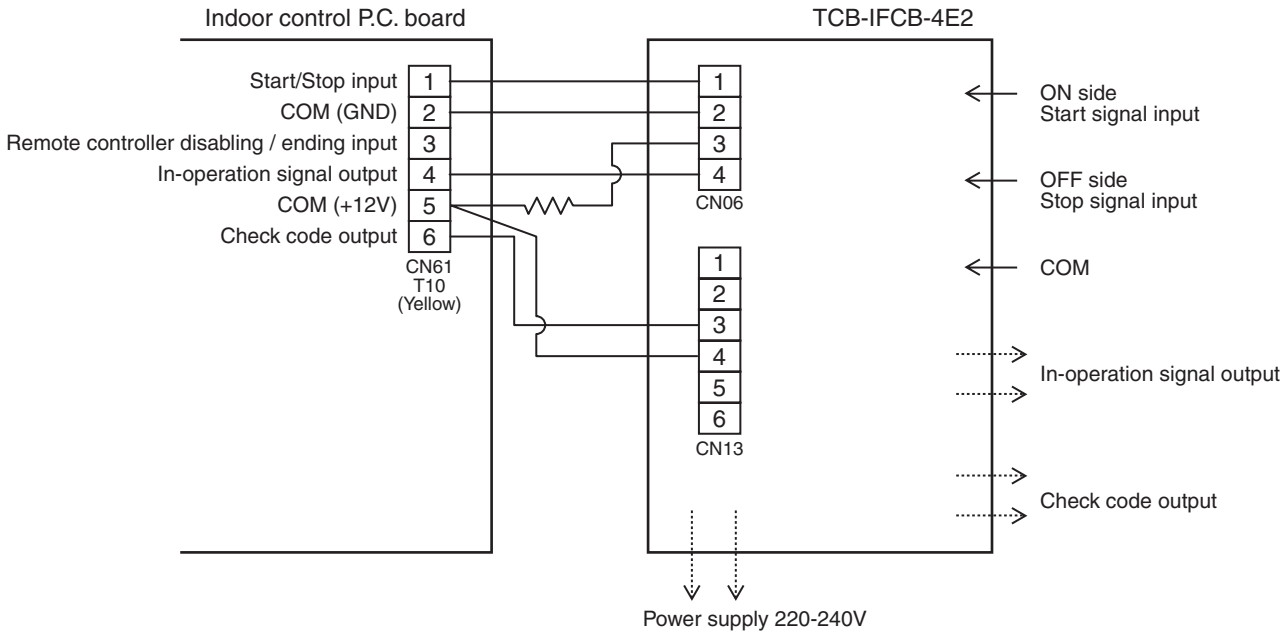

■ Ventilating fan control from remote controller

[Function]

- The start / stop operation can be operated from the wired remote controller when air to air heat exchanger or ventilating fan is installed in the system.
- The fan can be operated even if the indoor unit is not operating.
- Use a fan which can receive the no-voltage normally-open contact as an outside input signal.
- In a group control, the units are collectively operated and they cannot be individually operated.

1. Operation

Handle a wired remote controller in the following procedure.

* Use the wired remote controller during stop of the system.

* Be sure to set up the wired remote controller to the header unit. (Same in group control)

* In a group control, if the wired remote controller is set up to the header unit, both header and follower units are simultaneously operable.

<RBC-AMT∗∗∗>

1 **Push concurrently SET + CL + TEST buttons for 4 seconds or more.**

The unit No. displayed firstly indicates the header indoor unit address in the group control.
In this time, the fan of the selected indoor unit turns on.

2 **Every pushing UNIT LOUVER button (left side of the button), the indoor unit numbers in group control are displayed successively.**

In this time, the fan of the selected indoor unit only turns on.

3 **Using the setup temp ▼ or ▲ button, specify the CODE No. 31.**

4 **Using the timer time ▼ or ▲ button, select the SET DATA. (At shipment: 0000)**

The setup data are as follows:

SET DATA	Handling of operation of air to air heat exchanger or ventilating fan
0000	Unavailable (At shipment)
0001	Available

5 **Push SET button. (OK if display goes on.)**

- To change the selected indoor unit, go to the procedure ***2***).
- To change the item to be set up, go to the procedure ***3***).

6 **Pushing TEST returns the status to the usual stop status.**

* The ventilating fan control may be unavailable depending on the remote controllers.
(RBC-ASCU11-∗ does not have this function.)

2. Wiring

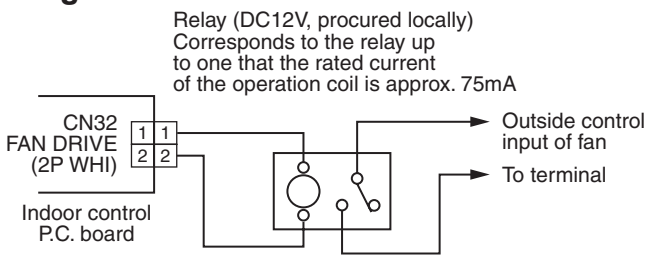

Note) Determine the cable length between the indoor control P.C. board and the relay within 2m.

■ Auto-off feature control

[Function]

- This function controls the indoor units individually. It is used when the start operation from outside is unnecessary but the stop operation is necessary.
- A card switch box or card lock helps protect customers from forgetting to turn off the indoor unit. (not including the following Card Input 3)
- It is connected with connector on the indoor control P.C. board, and switched with the Code No. and jumper wire setup for use.
- Available connectors are CN61 or CN73. For models without CN73, CN4 on the optional Application control kit (TCB-PCUC2E) can be used.

* Leaving-ON prevention control cannot be set with both CN61 and CN73 (CN4).
If both of them are set, CN73 (CN4) setting automatically turns to a factory default.

[Setup method]

(1) Wiring

Connecting to the CN61 connector

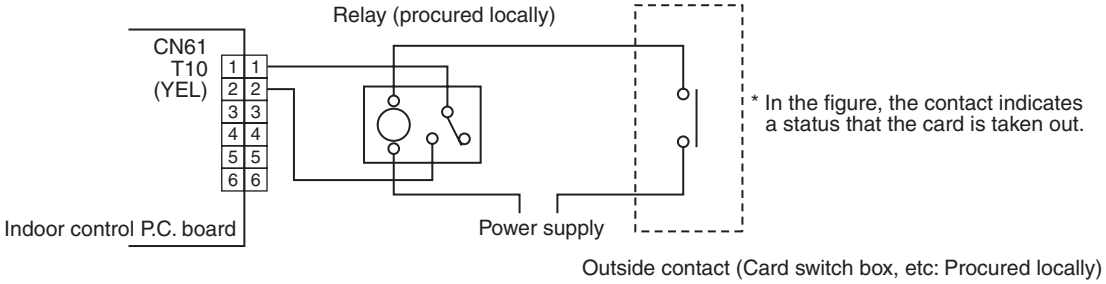

NOTE) Determine the cable length between the indoor control P.C. board and the relay within 3m.

Connecting to the Application control kit (TCB-PCUC2E, connector : CN4)

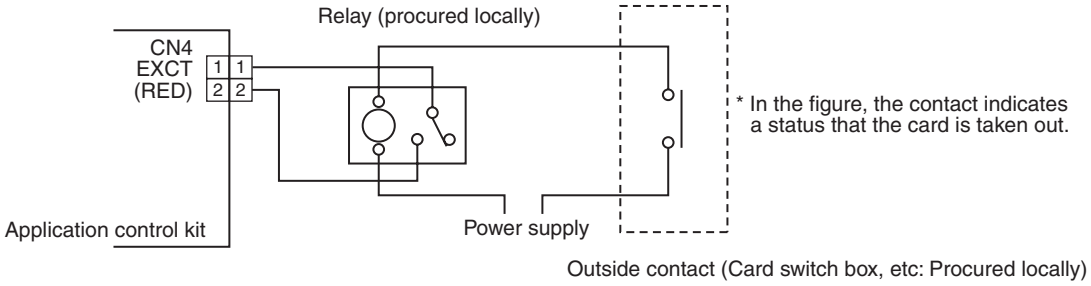

NOTE) Determine the cable length between the indoor control P.C. board and the relay within 3m.

(2) Code (DN) setup

Set Code (DN) according to “8-4. Method to set indoor unit function DN code”.

Connector	Jumper wire (J01)	Code No. (DN)	Set data	Function
CN61	Short-circuit (Factory default)	002E	0000 (Factory default)	"HA normal setup" (pulse)
			0001	"Card Input 1" setup
			0003	"Card Input 2" setup
			0005	"Card Input 5" setup
	Open-circuit (cut)		0000 (Factory default)	"HA normal setup" (Static)
			0001	"Card Input 3" setup
			0003	"Card Input 4" setup
CN73 (CN4)	Short-circuit (Factory default) or Open-circuit (cut)	000b	0000 (Factory default)	"EXCT demand" setup (Forced thermostat-OFF)
			0002	"Card Input 3" setup
			0004	"Card Input 4" setup
			0007	"Card Input 5" setup
			0008	"Card Input 1" setup
			0009	"Card Input 2" setup

* If you set “Card Input 1 to 5” for Code No. of CN61 and CN73, Code No. 000b setup becomes unavailable and the functions of Card Input 1 to 5 in CN73 cannot be used.

[Control items]

Function	External contact terminal	
	Close (Status that card is inserted)	Open (Status that card is taken out)
Card Input 1	Manual prohibition release (Manual operation)	Manual prohibition (Operation stop)
Card Input 2	Manual prohibition release (Automatic operation)	Manual prohibition (Operation stop)
Card Input 3	Operation status continues (Do nothing)	Operation status continues and setting temperature changes (COOL/DRY: 29ºC, HEAT: 18ºC)
Card Input 4	Manual prohibition release (The status returns to operating condition before removing the card.)	Manual prohibition (Operation stop)
Card Input 5	1) To change a setting temperature by changing data at DN code No. 172 to 174. 2) The operation mode can be set by changing data (0000, 0001, 0002) at DN code No. 16b. 0000: operation mode is the same at the current mode. (factory setting default) 0001: operation mode returns to the previous mode when card was inserted. (in case of the previous mode is off operation, the operation mode is also off.) 0002: operation mode starts at the same previous mode when the card was inserted. (the operation mode is on operation even the previous mode is off operation.) See contents below for DN settings and detailed operations.	1) To change a setting temperature, fan speed and wind direction by changing data at DN code No. 16C to 171. 2) The operation mode can be set by changing data (0000, 0001) at DN code No. 16A. 0000: operation mode is the same at the current mode. (factory setting default) 0001: operation automatically starts. See contents below for DN settings and detailed operations.

* For the card switch box that does not involve contact operation described above, convert signals with a relay including a normally-closed contact.

[Card input setup.5 Code (DN)]

DN	Item	Description	At shipment
16C	Open mode Set temp. (Cool, Dry)	-0015 : -15ºC to 0060 : 60ºC	0027 : 27ºC
16d	Open mode Set temp. (Heat)	-0015 : -15ºC to 0060 : 60ºC	0020 : 20ºC
16E	Open mode Set temp. (Auto)	-0015 : -15ºC to 0060 : 60ºC	0024 : 24ºC
16F	Open mode Fan speed (All operation mode)	0000 : No change 0001 : HH 0002 : H 0003 : L	0000 : No change
170	Open mode Wind direction (Cool, Dry, Fan)	0000 : No change 0001 : F1 0002 : F2 0003 : F3	0000 : No change
171	Open mode Wind direction (Heat)	0000 : No change 0001 : F1 0002 : F2 0003 : F3 0004 : F4 0005 : F5	0000 : No change
16A	Open mode Operation	0000 : No change 0001 : Run operation	0000 : No change
172	Close mode Set temp. (Cool, Dry)	-0015 : -15ºC to 0060 : 60ºC	0024 : 24ºC
173	Close mode Set temp. (Heat)	-0015 : -15ºC to 0060 : 60ºC	0024 : 24ºC
174	Close mode Set temp. (Heat)	-0015 : -15ºC to 0060 : 60ºC	0024 : 24ºC
16b	Close mode Operation	0000 : No change 0001 : Card ON mode operation 0002 : Run operation (Card ON mode setting)	0000 : No change

[The example of Card Input 5 setting]

Case.	Code No. (DN) setting									External contact terminal	
	[16A] data	[16b] data	[16C] data	[16d] data	[16F] data	[170] data	[171] data	[172] data	[173] data	Close (Status that card is inserted)	Open (Status that card is taken n out)
(1)	0000	0000	0027	0020	0000	0000	0000	0024	0024	• The operation mode continues running at the same as the current mode. • The setting temperature of cooling/dry and heating mode is changed to 24ºC and 24ºC respectively due to change in code No. 172, 173.	• The operation mode continues running at the same as the current mode. • The setting temperature of cooling/dry and heating mode is changed to 27ºC and 20ºC respectively due to change in code No. 16C, 16d.
(2)*	0000	0001	0027	0020	0003	0001	0001	0024	0024	• The operation mode is running at the same mode as the last time when the card was inserted due to change in code no. 16b. * The operation mode will be off if the mode at the last time was in off operation. Also, the fan speed will the same as the last time when the card is inserted. • The setting temperature of cooling/dry and heating mode is changed to 24ºC and 24ºC respectively due to change in code No. 172, 173.	• The operation mode continues running at the same as the current mode. • The setting temperature of cooling/dry and heating mode is changed to 27ºC and 20ºC respectively due to change in code no. 172, 173. • The fan speed for all operation modes is changed due to change in code no.16F. • The wind direction of Cooling/dry/fan and heating mode are changed due to change in code No. 170, 171 respectively.
(3)*	0000	0002	0027	0020	0003	0001	0001	0024	0024	• The operation mode is running at the same mode as the last time when the card was inserted. Also, the operation mode will be on even the mode was in off operation at the last time due to change in code no. 16B. * The fan speed will the same as the last time when the card is inserted. • The setting temperature of cooling/dry and heating mode is changed to 24ºC and 24ºC respectively due to change in code No. 172, 173.	Same operation as case (2)
(4)	0001	0000	0027	0020	0003	0001	0001	0024	0024	• The operation mode continues running at the same as the current mode. • The setting temperature of cooling/dry and heating mode is changed to 24ºC and 24ºC respectively due to change in code No. 172, 173.	• Due to change in code no. 16A, the operation mode will be as below. • When the operation is ON, the operation mode will continue running at the same as the current mode. • When the operation is OFF, the air conditioner will turn on automatically. • The setting temperature of cooling/dry and heating mode is changed to 27ºC and 20ºC respectively due to change in code No. 172, 173. • The fan speed for all operation modes is changed due to change in code no.16F. • The wind direction of Cooling/dry/fan and heating mode are changed due to change in code No. 170, 171 respectively.

* The history operation mode is only recorded when the card is inserted even if the operation mode is changed when the card is taken out, there is no related to the history operation mode.

■ Power peak-cut from indoor unit

When the relay is turned on, a forced thermostat OFF operation starts.

- For indoor P.C. boards other than MCC-1643, the “EXCT” is input with connector CN73 on the P.C. board. MCC-1643 requires Application control kit (TCB-PCUC2E) for input of a forced thermostat OFF “EXCT”. Please refer to the manual of Application control kit for a detailed setting.

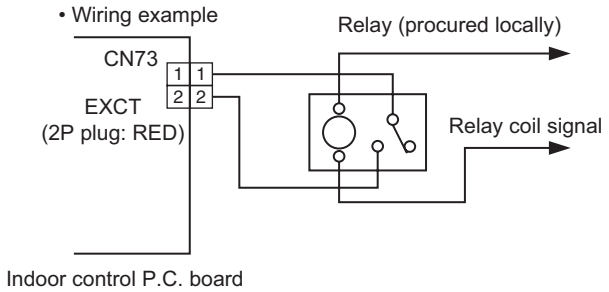

Note) Determine the cable length between the indoor or outdoor control P.C. board and the relay within 2 m.

■ Notice code signal

Notice code is a function dedicated to TU2C-Link communication.
See service manual for u series outdoor unit for details of Notice code.

[Function]

- Notice Code is issued if there is signal input to connector of outdoor unit P.C. board. This can be used in cases such as when confirming state of outdoor unit (filter clogging, etc.) by air conditioner system.
- Connector that can be used is CN61 or CN73. CN4 of separately-sold "option input/output P.C. board (TCB-PCUC2E)" can be used for models that do not have CN73.
- Used by switching functions with settings of Code No. (DN Code).
- Notice Code is continuously issued while input signal is ON.

[Setup method]

(1) Wiring

Connecting to the CN61 connector

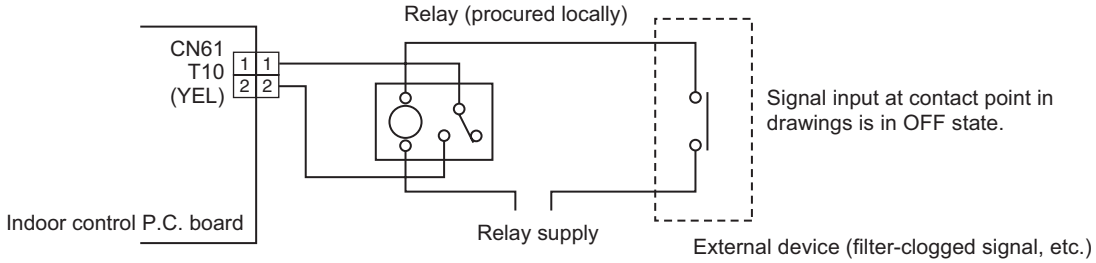

Note) Determine the cable length between the indoor control P.C. board and the relay within 3m.

Connecting to the Application control kit (TCB-PCUC2E, connector : CN4)

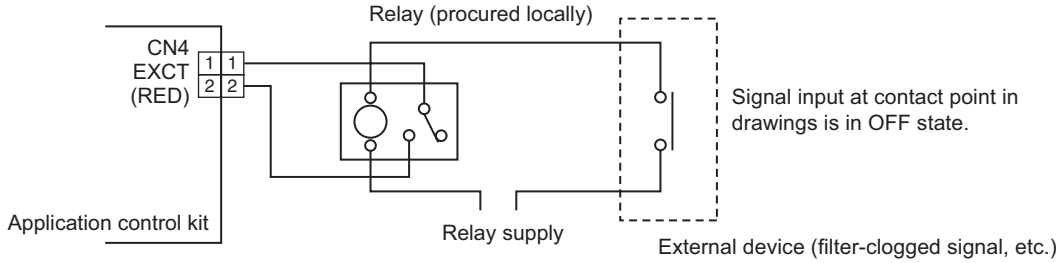

Note) Determine the cable length between the indoor control P.C. board and the relay within 3m.

(2) Code (DN) setup and Notice code
Set Code (DN) according to “8-4. Method to set indoor unit function DN code”.

Connector	Code No. (DN)	Set data	Notice code
CN61	002E	0004	201
CN73 (CN4)	000B	0006	202

* Setting of Code No. (DN Code) is necessary to display Notice code mark at remote controller.
Set data corresponding to Notice code to be used to one of Code No. 180 to 189, in accordance with following table.
In case where data other than 0000 is already set, set to other Code No. (DN Code).

Code No. (DN)	Set data	Notice code
0180 to 0189	0000	OFF (Factory default)
	0129	201
	0130	202

* It may take up to ten minutes to be displayed on remote controller after Notice code is issued.

■ Manual address setting using the remote controller

Procedure when setting indoor units' addresses first under the condition that indoor wiring has been completed and outdoor wiring has not been started (manual setting using the remote controller)

▼ Wiring example of 2 refrigerant lines

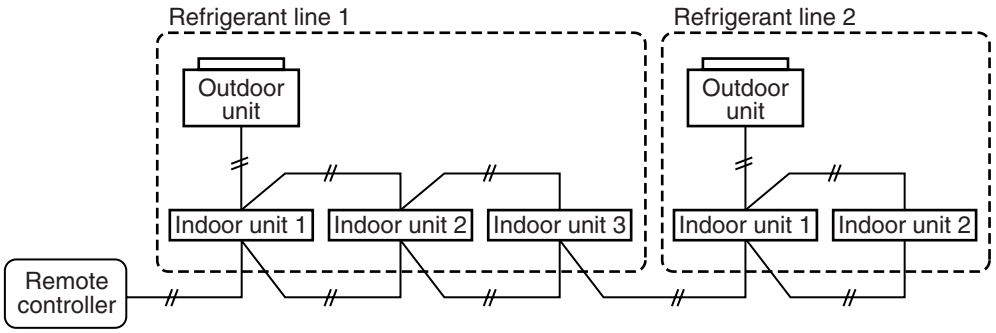

Line (system) address	1	1	1		2	2
Indoor unit address	1	2	3		1	2
Group address	1 Header unit	2 Follower unit	2 Follower unit		2 Follower unit	2 Follower unit

In the example above, disconnect the remote controller connections between the indoor units and connect a wired remote controller to the target unit directly before address setting.

<RBC-AMT∗∗∗>

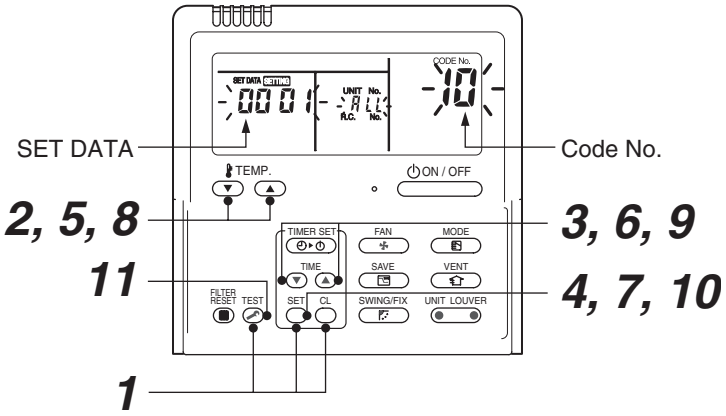

Pair the indoor unit to set and the remote controller one-to-one.

Turn on the power.

1 **Push and hold the SET, CL and TEST buttons at the same time for more than 4 seconds.**
LCD starts flashing.

<Line (system) address>

2 **Push the TEMP. ▼ / ▲ buttons repeatedly to set the CODE No. to 12 .**

3 **Push the TIME ▼ / ▲ buttons repeatedly to set a system address.**
(Match the address with the address on the interface P.C. board of the header outdoor unit in the same refrigerant line.)

4 **Push SET button.**
(It is OK if the display turns on.)

<Indoor unit address>

5 **Push the TEMP. ▼ / ▲ buttons repeatedly to set the CODE No. to 13 .**

6 **Push the TIME ▼ / ▲ buttons repeatedly to set an indoor unit address.**

7 **Push the SET button.**
(It is OK if the display turns on.)

<Group address>

8 **Push the TEMP. ▼ / ▲ buttons repeatedly to set the CODE No. to 14 .**

9 **Push the TIME ▼ / ▲ buttons repeatedly to set a group address. If the indoor unit is individual, set the address to 0000 ; header unit, 0001 ; follower unit, 0002 .**

Individual	: 0000	
Header unit	: 0001	} In case of group control
Follower unit	: 0002	

10 **Push the SET button.**
(It is OK if the display turns on.)

11 **Push the TEST button.**
The address setting is complete.
(SETTING flashes. You can control the unit after SETTING has disappeared.)

<RBC-ASCU11-∗>

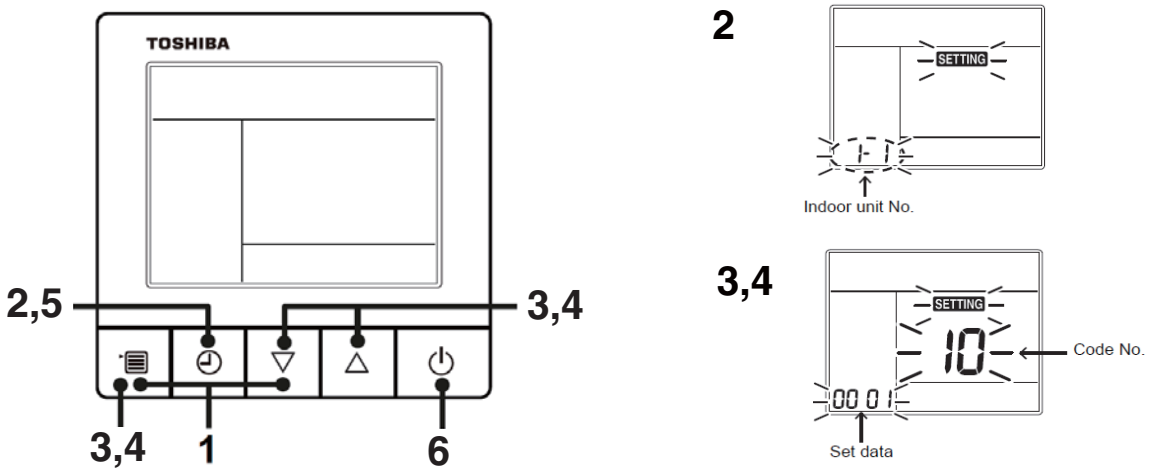

1 **Push and hold the [menu + ▽] buttons at same time for more than 10 seconds.**

2 **Push the [OFF timer] button to confirm the selected indoor unit.**

<Line (system) address>

3 **Push the [menu] button until the CODE No. flashes. And using the [▽ or △] buttons, specify the CODE No.12.**

4 **Push the [menu] button until the SET DATA flashes. And using the [▽ or △] buttons, set a system address.**

5 **Push the [OFF timer] button to confirm the SET DATA.**

<Indoor unit address>

3 **Push the [menu] button until the CODE No. flashes. And using the [▽ or △] buttons, specify the CODE No.13.**

4 **Push the [menu] button until the SET DATA flashes. And using the [▽ or △] buttons, set an indoor unit address.**

5 **Push the [OFF timer] button to confirm the SET DATA.**

<Group address>

3 **Push the [menu] button until the CODE No. flashes. And using the [▽ or △] buttons, specify the CODE No.14.**

4 **Push the [menu] button until the SET DATA flashes. And using the [▽ or △] buttons, set a group address.**
If the indoor unit is individual, set the address to 0000. (header unit : 0001, follower unit : 0002)

Individual	:0000	
Header unit	:0001	In case of group control
Follower unit	:0002	In case of group control

5 **Push the [OFF timer] button to confirm the SET DATA.**

6 **When all the settings have been completed, push the [ON/OFF] button to return to normal mode.**

NOTE

<In the case of combining with outdoor units of Super Modular Multi System u series (SMMS-u)>

- Turn ON DIP switch 1 of SW100 on the header outdoor unit interface P.C. board the lowest system address number.
- After finishing all the settings above, set the address of the central control devices. (For the setting of the central control address, refer to the installation manual of the central control devices.)

<In the case of combining with outdoor units other than Super Modular Multi System u series (SMMS-u)>

- Set a system address for the header outdoor unit of each line with SW13 and 14 of their interface P.C. boards.
- Turn off dip switch 2 of SW30 on the interface P.C. boards of all the header outdoor units connected to the same central control, except the unit that has the lowest address. (For unifying the termination of the wiring for the central control of indoor and outdoor units)
- Connect the relay connectors between the [U1, U2] and [U3, U4] terminals on the header outdoor unit of each refrigerate line.
- After finishing all the settings above, set the address of the central control devices. (For the setting of the central control address, refer to the installation manuals of the central control devices.)

■ Confirming the indoor unit addresses and the position of an indoor unit using the remote controller

◆ Confirming the numbers and positions of indoor units

To know the indoor unit addresses though position of the indoor unit is recognized

▼ When the unit is individual (the indoor unit is paired with a wired remote controller one-to-one), or it is a group-controlled one.

<RBC-AMT∗∗∗>

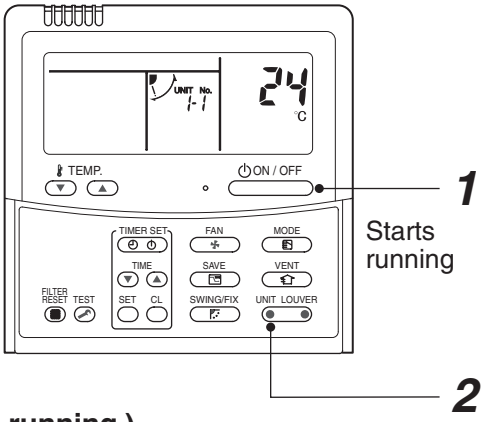

(Execute it while the units are running.)

1 Push the ON / OFF button if the units stop.

2 Push the UNIT LOUVER button (left side of the button).

A unit numbers 1- 1 is indicated on the LCD (it will disappear after a few seconds). The indicated number shows the system address and indoor unit address of the unit.
When 2 or more indoor units are connected to the remote controller (group-controlled units), a number of other connected units appears each time you push the UNIT LOUVER button (left side of the button).

<RBC-ASCU11-∗>

There is no such function in the remote controller.

◆To find an indoor unit's position from its address

▼When checking unit numbers controlled as a group

<RBC-AMT∗∗∗>

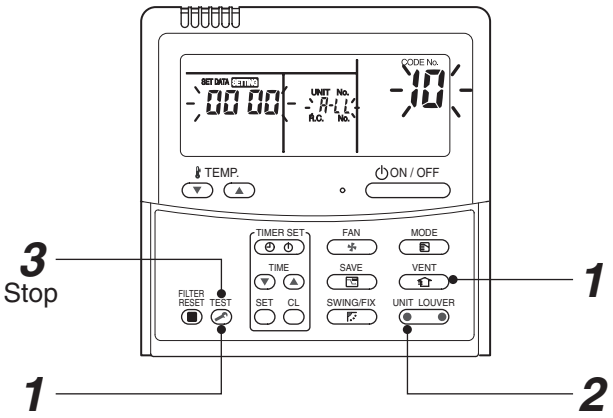

(Execute it while the units are stopped.)
The indoor unit numbers in a group are indicated one after another. The fan and louvers of the indicated units are activated.

1 Push and hold the VENT and TEST buttons at the same time for more than 4 seconds.
- ALL appears on UNIT No. on the LCD display.
- The fans and louvers of all the indoor units in the group are activated.

2 Push the UNIT LOUVER button (left side of the button). Each time you push the button, the indoor unit numbers are indicated one after another.
- The first-indicated unit number is the address of the header unit.
- Only the fan and louvers of the indicated indoor unit are activated.

3 Push the TEST button to finish the procedure.
All the indoor units in the group stop.

<RBC-ASCU11-∗>

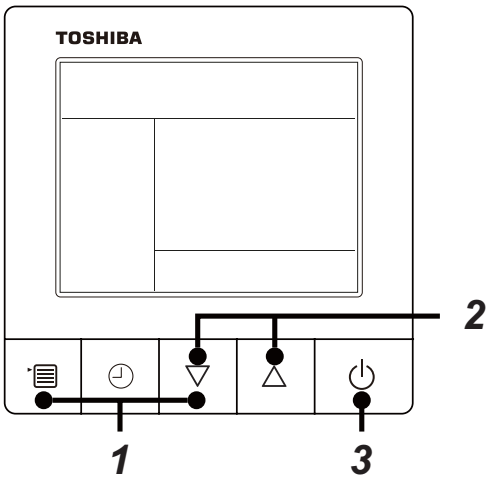

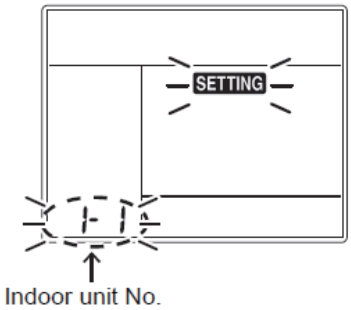

1 Push and hold the [menu + ▽] buttons at same time for more than 10 seconds. e.g.)A unit number 1-1 is indicated on the LCD. The indicated number shows the system address and indoor unit address of the unit.

2 When 2 or more indoor units are connected to the remote controller (group-controlled units), a number of other connected units appears each time you push the [▽ or △] buttons.

3 Push the [ON/OFF] button, return to the normal mode.

▼ **To check all the indoor unit addresses using an arbitrary wired remote controller. (When communication wirings of 2 or more refrigerant lines are interconnected for central control)**

<RBC-AMT∗∗∗>

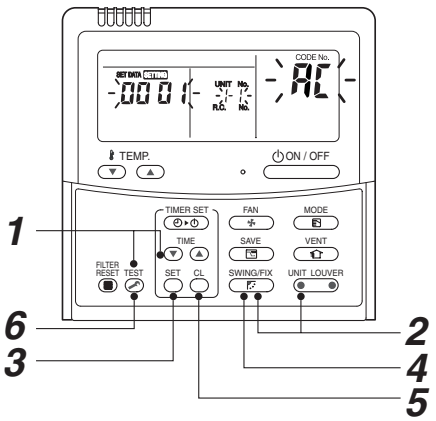

(Execute it while the units are stopped.)

You can check indoor unit addresses and positions of the indoor units in a single refrigerant line.
When an outdoor unit is selected, the indoor unit numbers of the refrigerant line of the selected unit are indicated one after another and the fan and louvers of the indicated indoor units are activated.

1 **Push and hold the TIME ▼ and TEST buttons at the same time for more than 4 seconds. At first, the line 1 and CODE No. AC (Address Change) are indicated on the LCD display. (Select an outdoor unit.)**

2 **Push the UNIT LOUVER button (left side of the button) and SWING/FIX buttons repeatedly to select a system address.**

3 **Push the SET button to confirm the system address selection.**

- The address of an indoor unit connected to the selected refrigerant line is indicated on the LCD display and its fan and louvers are activated.

4 **Push the UNIT LOUVER button (left side of the button). Each time you push the button, the indoor unit numbers of the selected refrigerant line are indicated one after another.**

- Only the fan and louvers of the indicated indoor unit are activated.

◆To select another system address

5 **Push the CL button to return to step *2*.**

- After returning to step ***2***, select another system address and check the indoor unit addresses of the line.

6 **Push the TEST button to finish the procedure.**

<RBC-ASCU11-∗>

There is no such function in the remote controller.

◆ Changing the indoor unit address using a remote controller

To change an indoor unit address using a wired remote controller.

▼ The method to change the address of an individual indoor unit (the indoor unit is paired with a wired remote controller one-to-one), or an indoor unit in a group.
(The method is available when the addresses have already been set automatically.)

<RBC-AMT∗∗∗>

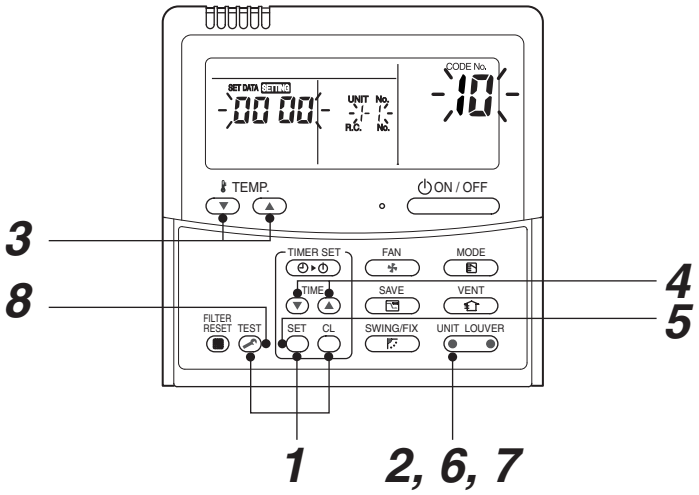

(Execute it while the units are stopped.)

1 **Push and hold the SET, CL, and TEST buttons at the same time for more than 4 seconds.**
(If 2 or more indoor units are controlled in a group, the first indicated UNIT No. is that of the head unit.)

2 **Push the UNIT LOUVER button (left side of the button) repeatedly to select an indoor unit number to change if 2 or more units are controlled in a group. (The fan and louvers of the selected indoor unit are activated.)**
(The fan of the selected indoor unit is turned on.)

3 **Push the TEMP. ▼ / ▲ buttons repeatedly to select 13 for CODE No.**

4 **Push the TIME ▼ / ▲ buttons repeatedly to change the value indicated in the SET DATA section to that you want.**

5 **Push the SET button.**

6 **Push the UNIT LOUVER button (left side of the button) repeatedly to select another indoor UNIT No. to change.**
Repeat steps ***4*** to ***6*** to change the indoor unit addresses so as to make each of them unique.

7 **Push the UNIT LOUVER button (left side of the button) to check the changed addresses.**

8 **If the addresses have been changed correctly, push the TEST button to finish the procedure.**

<RBC-ASCU11-∗>

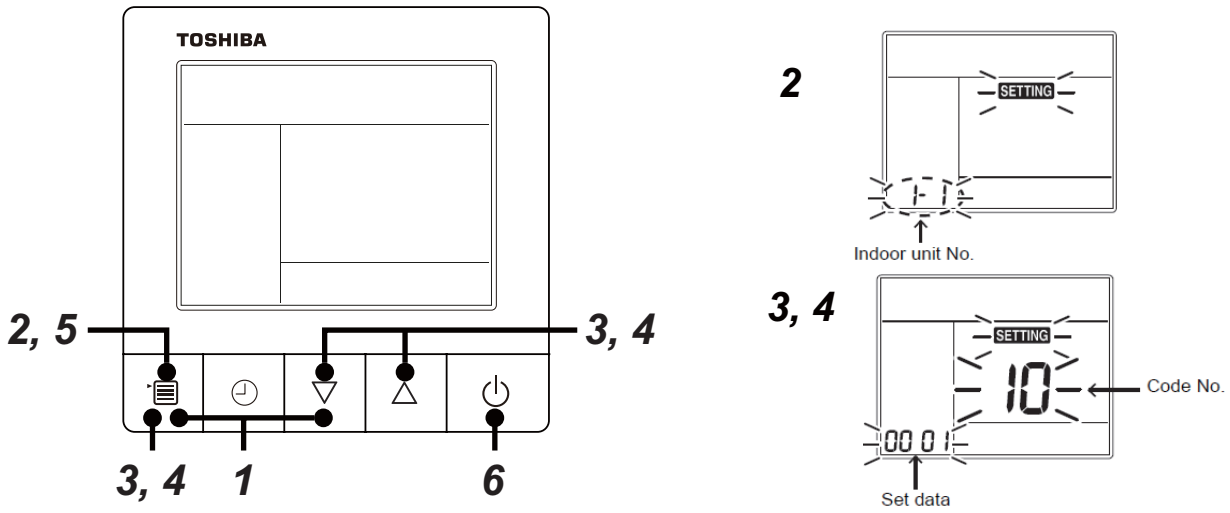

1 **Push and hold the [menu + ▽] buttons at same time for more than 10 seconds.**

2 **Push the [OFF timer] button to confirm the selected indoor unit.**

3 **Push the [menu] button until the CODE No. flashes. And using the [▽ or △] buttons, specify the CODE No.13.**

4 **Push the [menu] button until the SET DATA flashes. And using the [▽ or △] buttons, set an indoor unit address.**

5 **Push the [OFF timer] button to confirm the SET DATA.**

6 **When all the settings have been completed, push the [ON/OFF] button, return to normal mode.**

▼ **To change all the indoor unit addresses using an arbitrary wired remote controller.**
(The method is available when the addresses have already been set automatically.)

(When communication wirings of 2 or more refrigerant lines are interconnected for central control)

NOTE

You can change the addresses of indoor units in each refrigerant line using an arbitrary wired remote controller.

* Enter the address check / change mode and change the addresses.

<RBC-AMT∗∗∗>

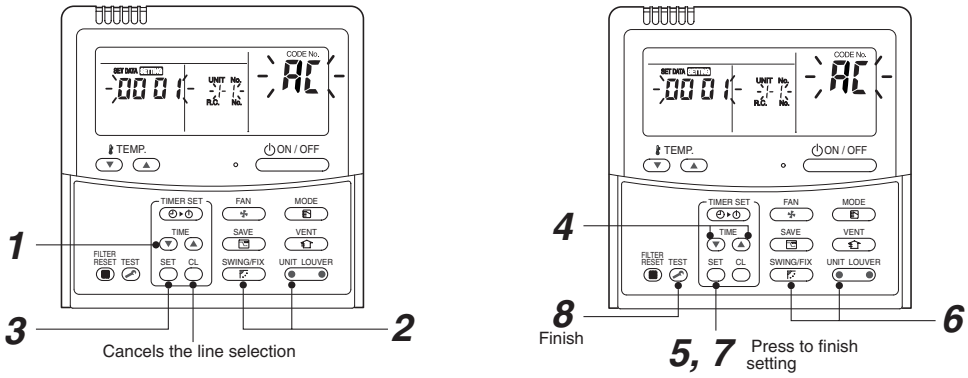

If no number appears on UNIT No., no outdoor unit exists on the line. Push button and select another line following step ***2***.

(Execute it while the units are stopped.)

1 **Push and hold the TIME ▼ / ▲ buttons at the same time for more than 4 seconds.**
At first, the line 1 and CODE No. AC (Address Change) are indicated on the LCD display.

2 **Push UNIT LOUVER button (left side of the button) and SWING/FIX buttons repeatedly to select a system address.**

3 **Push the SET button.**
- The address of one of the indoor units connected to the selected refrigerant line is indicated on the LCD display and the fan and louvers of the unit are activated.
  At first, the current indoor unit address is displayed in SET DATA.
  (No system address is indicated.)

4 **Push the TIME ▼ / ▲ buttons repeatedly to change the value of the indoor unit address in SET DATA.**
Change the value in SET DATA to that of a new address.

5 **Push the SET button to confirm the new address on SET DATA.**

6 **Push the UNIT LOUVER button (left side of the button) repeatedly to select another address to change.**
Each time you push the button, the indoor unit numbers in a refrigerant line are indicated one after another. Only the fan and louvers of the selected indoor unit are activated.
Repeat steps ***4*** to ***6*** to change the indoor unit addresses so as to make each of them unique.

7 **Push the SET button.**
(All the segments on the LCD display light up.)

8 **Push the TEST button to finish the procedure.**

<RBC-ASCU11-∗>

There is no such function in the remote controller.

◆ Check code clearing function

How to clear the check code using the wired remote controller

<RBC-AMT∗∗∗>

▼ Clearing a check code of the outdoor unit
Clear the currently detected outdoor unit for each refrigerant line to which the indoor unit controlled by the remote controller is connected. (The indoor unit check code is not cleared.)
Use the service monitoring function of the remote controller.

1. **Push and hold the CL , and TEST for 4 seconds or longer to enter the service monitoring mode.**
2. **Push the TEMP. button to set CODE No. to "FF".**
3. **The display in A of the following figure counts down as follows at 5-second intervals: "0005" → "0004" → "0003" → "0002" → "0001" → "0000".**
   The check code is cleared when "0000" appears.
   However, the display counts down from "0005" again.
4. **Push the TEST to return the display to normal.**

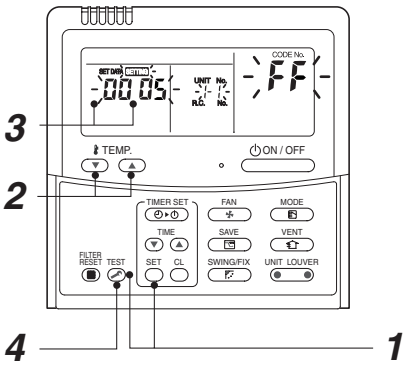

▼ Clearing a check code of the indoor unit
Push the ON / OFF button on the remote controller.
(Only the check code of the indoor unit controlled by the remote controller will be cleared.)

<RBC-ASCU11-∗>

▼ **Clearing a check code of the outdoor unit**
Clear the currently detected outdoor unit for each refrigerant line to which the indoor unit controlled by the remote controller is connected. (The indoor unit check code is not cleared.)
Use the service monitoring function of the remote controller.

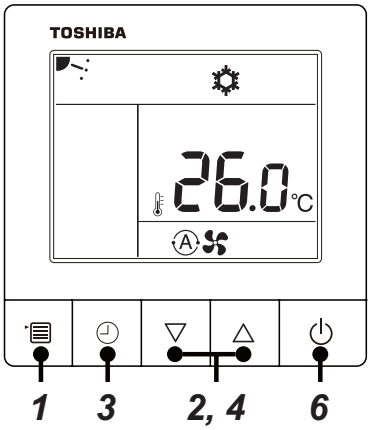

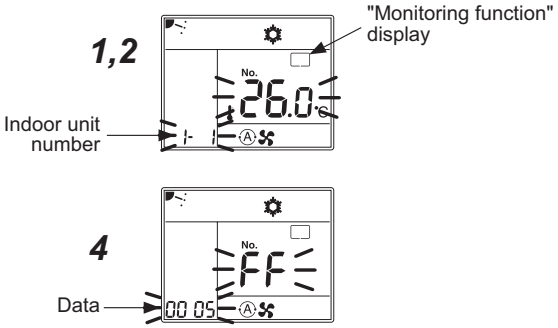

1 **Push the [menu] button for over 10 seconds.**

2 **Every pushing [▽ or △] buttons, the indoor unit numbers in group control are displayed successively.**

3 **Push the [OFF timer] button to confirm the selected indoor unit.**

4 **Every pushing [▽ or △] buttons to set CODE No. to "FF"**

5 **The display in A of the following figure counts down as follows at 5-second intervals:**
"0005" → "0004" → "0003" → "0002" → "000 1" → "0000"
The check code is cleared when "000" appears.
However, the display counts down from "005" again.

6 **After you have finished checking, push the [ON/OFF] button to return to normal mode.**

▼ **Clearing a check code of the indoor unit**
Push the ON / OFF button on the remote controller.
(Only the check code of the indoor unit controlled by the remote controller will be cleared.)

▼ Monitoring function of wired remote controller

<RBC-AMT∗∗∗>

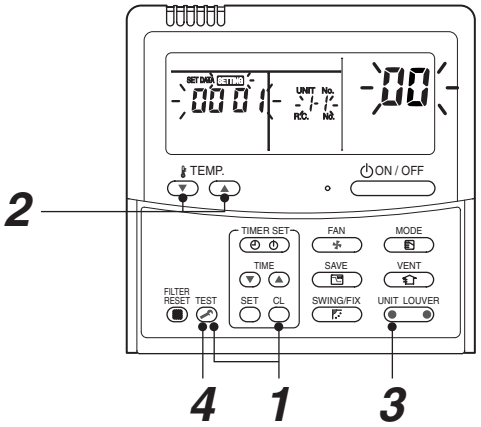

Content

Enter the service monitoring mode using the remote controller to check the sensor temperature or operation status of the remote controller, indoor unit, and outdoor unit.

1 **Push and hold the TEST, and CL for 4 seconds or longer to enter the service monitoring mode.**
The service monitor lights up. The CODE No. 00 appears at first.

2 **Push the TEMP. button to change to CODE No. of the item to monitor. Refer to the next page for CODE No.**

3 **Push the left part of the UNIT LOUVER button (left side of the button) to change to the item to monitor. Monitor the sensor temperature or operation status of the indoor unit and outdoor unit in the refrigerant line.**

4 **Push the TEST button to return the display to normal.**

<RBC-ASCU11-∗>

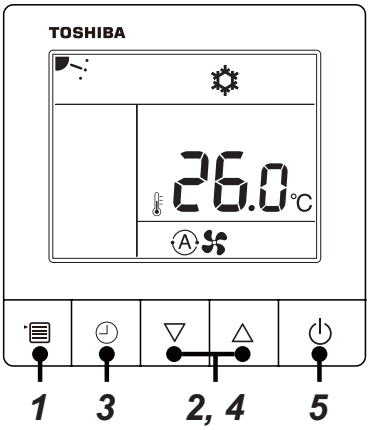

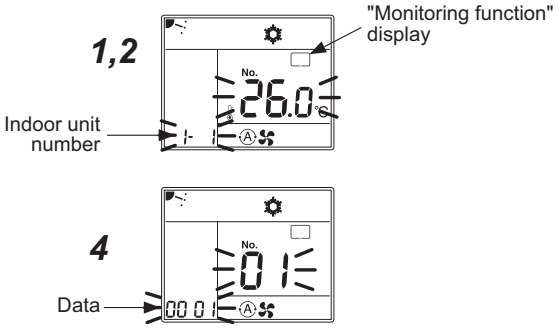

1 **Push the [menu] button for over 10 seconds. “Monitoring function” is displayed on a screen.**

2 **Every pushing [▽ or △] buttons, the indoor unit numbers in group control are displayed successively.**

3 **Push the [OFF timer] button to confirm the selected indoor unit.**

4 **Every pushing [▽ or △] buttons, CODE No. of the item is changed successively.**

5 **After you have finished checking, push the [ON/OFF] button, return to normal mode.**

◆ Indoor service monitor list

	Code No.	Data name	Display format	Unit	Remote controller display example
Indoor unit data *	00	Room temperature (Use to control)	×1	°C	
	01	Room temperature (Remote controller)	×1	°C	
	02	Indoor suction air temperature (TA)	×1	°C	
	03	Indoor coil temperature (TCJ)	×1	°C	
	04	Indoor coil temperature (TC2)	×1	°C	
	05	Indoor coil temperature (TC1)	×1	°C	
	06	Indoor discharge air temperature (TF) **	×1	°C	
	07	Indoor fan motor number of revolutions**	×1	rpm	[0600] = 600rpm
	08	Indoor PMV opening	×1/10	pls	[0150]=1500pls
	F3	Filter sign time	×1	h	[2500] = 2500h
	F9	Suction temperature of air to air heat exchanger (TSA) **	×1	°C	[0024] = 24°C
	FA	Outside air temperature (TOA) **	×1	°C	

* When the units are connected to a group, data of the header indoor unit only can be displayed.
** There is also a model which cannot be displayed.

• Refer to the service manual of an outdoor unit for "outdoor service monitor list".

9. TROUBLESHOOTING

9-1. Overview

(1) Before engaging in troubleshooting

(a) Applicable models
All Super Modular Multi System (SMMS-∗) models.
(Indoor units: MM∗-UP∗∗∗, Outdoor units: MMY-M∗P∗∗∗)

(b) Tools and measuring devices required
- Screwdrivers (Philips, flat head), spanners, long-nose pliers, nipper, pin to push reset switch, etc.
- Multimeter, thermometer, pressure gauge, etc.

(c) Things to check prior to troubleshooting (behaviors listed below are normal)

NO.	Behavior	Possible cause
1	A compressor would not start	• The air conditioner is being controlled by the 3-minute protective function. • It is in standby status though the room temperature has reached the setup temperature. • It is being operated in timer mode or fan mode. • It is being in initial communication.
2	An indoor fan would not start	• The air conditioner is being controlled by the cool air discharge preventive function in "heating"?
3	An outdoor fan would not start or would change speed for no reason	• The air conditioner is being operated in "cooling" under the low outside air temperature. • It is being operated in defrost operation.
4	An indoor fan would not stop	• The air conditioner is being controlled by function of residual heat elimination being performed as part of the air conditioner shutdown process after heating operation.
5	The air conditioner would not respond to a start/stop command from a remote controller	• The air conditioner is being operated under external or remote controller.

⚠ CAUTION

The cooling performance may be declining considerably when total operating capacity of cooling indoor units is less than 4 HP while ambient temperature is below.

(2) Troubleshooting procedure
When a problem occurs, proceed with troubleshooting in accordance with the procedure shown below.

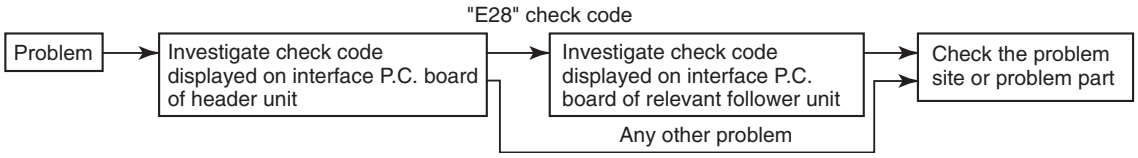

NOTE

Rather than a product trouble (see the List of Check Codes below), the problem could have been caused by a microprocessor malfunction attributable to a poor quality of the power source or an external noise. Check for possible noise sources, and shield the remote controller wiring and signal wires as necessary.

9-2. Troubleshooting method

The remote controllers (main remote controller and central control device) and the interface P.C. board of an outdoor unit are provided with an a 7-segment display (outdoor interface P.C. board) to display operational status. Using this self-diagnosis feature, the trouble site / trouble part may be identified in the event of a trouble by following the method described below.

The list below summarizes check codes detected by various devices. Analyze the check code according to where it is displayed and work out the nature of the trouble in consultation with the list.

- When investigating a trouble on the basis of a display provided on the indoor remote controller or central control device - See the “central control device or main remote controller display” section of the list.
- When investigating a trouble on the basis of a display provided on an outdoor unit - See the “Outdoor 7-segment display” section of the list.
- When investigating a trouble on the basis of a wireless remote controller-controlled indoor unit - See the “Indicator light block” section of the list.

List of check codes (indoor unit)

(Check code detected by indoor unit)

IPDU: Compressor / Fan inverter P.C. board
○: Lighting,◎: Flashing,●: Goes off
ALT.: Flashing is alternately when there are two flashing LED
SIM: Simultaneous flashing when there are two flashing LED

Check code			Display of receiving unit				Typical trouble on site	Description of check code
Remote controller display	Outdoor 7-segment display		Indicator light block					
		Sub-code	Operation	Timer	Ready	Flash		
E03	–	–	◎	●	●		Indoor-remote controller periodic communication check code	Communication from remote controller or network adaptor has been lost (so has central control communication).
E04	–	–	●	●	◎		Indoor-outdoor periodic communication check code	Signals are not being received from outdoor unit.
E08	E08	Duplicated indoor address	◎	●	●		Duplicated indoor address	Indoor unit detects address identical to its own.
E10	–	–	◎	●	●		Communication trouble between indoor unit MCU	Communication trouble between main MCU and the motor microcomputer MCU
E11	–	–	◎	●	●		Communication check code between Application control kit and indoor unit	Communication check code between Application control kit and indoor unit P.C. board
E18	–	–	◎	●	●		Check cod in periodic communication between indoor header and follower unit	Periodic communication between indoor header and follower units cannot be maintained.
F01	–	–	◎	◎	●	ALT	Indoor heat exchanger temperature sensor (TCJ) check code	Heat exchanger temperature sensor (TCJ) has been open / short-circuit.
F02	–	–	◎	◎	●	ALT	Indoor heat exchanger temperature sensor (TC2) check code	Heat exchanger temperature sensor (TC2) has been open / short-circuit.
F03	–	–	◎	◎	●	ALT	Indoor heat exchanger temperature sensor (TC1) check code	Heat exchanger temperature sensor (TC1) has been open / short-circuit.
F10	–	–	◎	◎	●	ALT	Ambient temperature sensor (TA) check code	Ambient temperature sensor (TA) has been open / short-circuit.
F11	–	–	◎	◎	●	ALT	Discharge temperature sensor (TF) check code	Discharge temperature sensor (TF) has been open / short-circuit.
F29	–	–	◎	◎	●	SIM	P.C. board or other indoor check code	Indoor EEPROM is abnormal (some other trouble may be detected).
F30	–	–	◎	◎	○	ALT	Occupancy sensor trouble	Occupancy sensor trouble has been detected.
L03	–	–	◎	●	◎	SIM	Duplicated indoor group header unit	There is more than one header unit in group.
L07	–	–	◎	●	◎	SIM	Connection of group control cable to a single indoor unit	There is at least one a single indoor unit to which group control cable is connected.
L08	L08	–	◎	●	◎	SIM	Indoor group address not set	Address setting has not been performed for one or more indoor units (also detected at outdoor unit end).
L09	–	–	◎	●	◎	SIM	Indoor capacity not set	Capacity setting has not been performed for indoor unit.
L20	–	–	◎	○	◎	SIM	Duplicated central control address	There is duplication in central control address setting.
L30	L30	Detected indoor unit No.	◎	○	◎	SIM	Indoor external check code input (interlock)	Unit shutdown has been caused by external check code input (CN80).
P01	–	–	●	◎	◎	ALT	Indoor AC fan check code	Indoor AC fan check code is detected (activation of fan motor thermal relay).
P10	P10	Detected indoor unit No.	●	◎	◎	ALT	Indoor overflow check code	Float switch has been activated.
P12	–	–	●	◎	◎	ALT	Indoor DC fan check code	• Indoor DC fan check code (e.g. overcurrent or lock-up) is detected.
P31	–	–	◎	●	◎	ALT	Other indoor unit check code	Follower unit cannot be operated due to header unit alarm (E03 /L03 / L07 / L08).

(Check code detected by remote controller)

Check code			Display of receiving unit					Typical trouble site	Description of trouble
Remote control	Outdoor 7-segment display		Indicator light block						
		Sub-code	Operation	Timer	Ready		Flash		
E01	–	–	◎	●	●			No master remote control, failure remote control communication (reception)	Signals cannot be received from indoor unit; master remote control has not been set (including two remote control).
E02	–	–	◎	●	●			Failure remote control communication (transmission)	Signals cannot be transmitted to indoor unit.
E09	–	–	◎	●	●			Duplicated master remote control	Both remote controls have been set as master remote control in two remote control (alarm and shutdown for header unit and continued operation for follower unit)

(Check code detected by central control device)

Check code			Display of receiving unit					Typical trouble site	Description of trouble
Central control	Outdoor 7-segment display		Indicator light block						
		Sub-code	Operation	Timer	Ready		Flash		
C05	–	–	No indication (when main remote control also in use)					Failure central control communication (transmission)	Central control device is unable to transmit signal due to duplication of central control device
C06	–	–						Failure central control communication (reception)	Central control device is unable to receive signal.
C12	–	–	–					Bracket alarm for general-purpose device control interface	Device connected to general-purpose device control interface is trouble.
P30 (L20)	–	–	(L20 is displayed.)					Communication Link	• Duplication addresses of indoor units in central control device • With the combination of air conditioning system, the indoor unit may detect the check code of L20

Note: The same trouble, e.g. a communication trouble, may result in the display of different check codes depending on the device that detects it. Moreover, check codes detected by the main remote controller / central control device do not necessarily have a direct impact on air conditioner operation.

Flow selector unit (FS unit) Relation

(Check code detected by indoor unit)

Check code			Display of receiving unit					Typical trouble site	Description of trouble
Main remote control	Outdoor 7-segment display		Indicator light block						
		Sub-code	Operation	Timer	Ready		Flash		
E17	–	–	◎	●	●			Communication trouble between indoor unit (s) and FS unit (s)	There is no communication from FS unit(s)
J03	–	–	●	◎	◎			Duplicated FS units	More than one FS units have been set up in one refrigerant line.
J10	–	–	●	◎	◎			FS unit overflow trouble	FS unit has been shutdown in one refrigerant line due to detection of overflow
J11	–	–	●	◎	◎			FS unit temperature sensor (TCS) trouble	FS unit temperature sensor (TCS) has been open/short-circuited.
L12	L12	–	◎	○	◎			FS unit(s) system trouble	FS unit(s) outside the application setting

List of Check Codes (Outdoor Unit)

(Check code detected by outdoor interface - typical examples)

If "HELLO" is displayed on the oudoor 7-segment for 1 minute or more, turn off the power supply once and then turn on the power supply again after passage of 30 seconds or more. When the same symptom appears, it is considered there is a possibility of I/F board trouble.

○ : Lighting, ◎ : Flashing, ● : Goes off
ALT.: Flashing is alternately when there are two flashing LED
SIM: Simultaneous flashing when there are two flashing LED

Check code			Display of receiving unit				Typical problem site	Description of problem
Outdoor 7-segment display		Central control or main remote controller display	Indicator light block					
	Sub-code		Operation ⏻	Timer ◷	Ready ☼	Flash		
E06	Number of indoor units from which signal is received normally	E06	●	●	◎		Signal lack of indoor unit	Indoor unit initially communicating normally fails to return signal (reduction in number of indoor units connected).
E07	–	(E04)	●	●	◎		Indoor-outdoor communication circuit trouble	Signal cannot be transmitted to indoor units (→ indoor units left without communication from outdoor unit).
E08	Duplicated indoor address	(E08)	◎	●	●		Duplicated indoor address	More than one indoor unit are assigned same address (also detected at indoor unit end).
E12	01: Indoor-outdoor communication 02: Outdoor-outdoor communication	E12	◎	●	●		Automatic address starting trouble	• Indoor automatic address setting is started while automatic address setting for equipment in other refrigerant line is in progress. • Outdoor automatic address setting is started while automatic address setting for indoor units is in progress.
E15	–	E15	●	●	◎		Indoor unit not found during automatic address setting	Indoor unit fails to communicate while automatic address setting for indoor units is in progress.
E16	00: Capacity over 01: Number of units connected	E16	●	●	◎		Too many indoor units connected/capacity over	Combined capacity of indoor units is too large. The maximum combined of indoor units shown in the specification table.
E19	00: No header unit 02: Two or more header units	E19	●	●	◎		Trouble in number of outdoor header units	There is no or more than one outdoor header unit in one refrigerant line.
E20	01: Connection of outdoor unit from other refrigerant line 02: Connection of indoor unit from other refrigerant line	E20	●	●	◎		Connection to other refrigerant line found during automatic address setting	Indoor unit from other refrigerant line is detected while indoor automatic address setting is in progress.
E23	–	E23	●	●	◎		Outdoor-outdoor communication transmission trouble	Signal cannot be transmitted to other outdoor units.
E25	–	E25	●	●	◎		Duplicated follower outdoor address	There is duplication in outdoor addresses set manually.
E26	Address of outdoor unit from which signal is not received normally	E26	●	●	◎		Signal lack of outdoor unit	Follower outdoor unit initially communicating normally fails to do so (reduction in number of follower outdoor units connected).
E28	Detected outdoor unit No.	E28	●	●	◎		Outdoor follower unit trouble	Outdoor header unit detects trouble relating to follower outdoor unit (detail displayed on follower outdoor unit).
E31	P.C.board (Compressor 1, 2; Fan Motor 1, 2) 01: O ; 02: O ; 03: O O ; 08: O ; 09: O O ; 0A: O O ; 0B: O O O ; 10: O P.C.board (Compressor 1, 2; Fan Motor 1, 2) 11: O O ; 12: O O ; 13: O O O ; 18: O ; 19: O O ; 1A: O O ; 1B: O O O Circle (O): Trouble P.C. board 80 : Communication trouble between MCU and Sub MCU	E31	●	●	◎		P.C. board communication trouble Sub MCU communication trouble	There is no communication between P.C. boards in inverter box.
F04	–	F04	◎	◎	○	ALT	Outdoor discharge temperature sensor (TD1) trouble	Outdoor discharge temperature sensor (TD1) has been open/short-circuited.
F05	–	F05	◎	◎	○	ALT	Outdoor discharge temperature sensor (TD2) trouble	Outdoor discharge temperature sensor (TD2) has been open/short-circuited.
F06	01: TE1 sensor 02: TE2 sensor 03: TE3 sensor	F06	◎	◎	○	ALT	Outdoor heat exchanger liquid side temperature sensor (TE1, TE2, TE3) trouble	Outdoor heat exchanger liquid side temperature sensors (TE1, TE2, TE3) have been open/short-circuited.
F07	01: TL1 sensor 02: TL2 sensor 03: TL3 sensor	F07	◎	◎	○	ALT	Outdoor liquid temperature sensor (TL1,TL2,TL3) trouble	Outdoor liquid temperature sensor (TL1,TL2,TL3) has been open/short-circuited.
F08	–	F08	◎	◎	○	ALT	Outdoor outside air temperature sensor (TO) trouble	Outdoor air temperature sensor (TO) has been open/short-circuited.
F09	01: TG1 sensor 02: TG2 sensor 03: TG3 sensor	F09	◎	◎	○	ALT	Outdoor heat exchanger gas side temperature sensor (TG1, TG2, TG3) trouble	Outdoor heat exchanger gas side temperature sensors (TG1, TG2, TG3) have been open/short-circuited.

Check code			Display of receiving unit				Typical problem site	Description of problem
Outdoor 7-segment display		Central control or main remote controller display	Indicator light block					
	Sub-code		Operation	Timer	Ready	Flash		
F12	01: TS1 sensor 03: TS3 sensor	F12	◎	◎	○	ALT	Outdoor suction temperature sensor (TS1,TS3) trouble	Outdoor suction temperature sensor (TS1,TS3) has been open/short-circuited.
F15	–	F15	◎	◎	○	ALT	Outdoor temperature sensor (TE1,TL1) wiring trouble	Wiring trouble in outdoor temperature sensors (TE1,TL1) has been detected.
F16	–	F16	◎	◎	○	ALT	Outdoor pressure sensor (Pd, Ps) wiring trouble	Wiring trouble in outdoor pressure sensors (Pd, Ps) has been detected.
F23	–	F23	◎	◎	○	ALT	Low pressure sensor (Ps) trouble	Output voltage of low pressure sensor (Ps) is zero.
F24	–	F24	◎	◎	○	ALT	High pressure sensor (Pd) trouble	Output voltage of high pressure sensor (Pd) is zero or provides abnormal readings when compressors have been turned off.
F31	–	F31	◎	◎	○	SIM	Outdoor EEPROM trouble	Outdoor EEPROM is failure (alarm and shutdown for header unit and continued operation for follower unit)
H05	–	H05	●	◎	●		Outdoor discharge temperature sensor (TD1) wiring trouble	Wiring/installation trouble or detachment of outdoor discharge temperature sensor (TD1) has been detected.
H06	–	H06	●	◎	●		Activation of low-pressure protection	Low pressure (Ps) sensor detects abnormally low operating pressure.
H07	–	H07	●	◎	●		Low oil level protection	Temperature sensor for oil level detection (TK1,TK2) detects abnormally low oil level.
H08	01: TK1 sensor trouble 02: TK2 sensor trouble	H08	●	◎	●		Trouble in temperature sensor for oil level detection (TK1,TK2)	Temperature sensor for oil level detection (TK1,TK2) has been open/short-circuited.
H15	–	H15	●	◎	●		Outdoor discharge temperature sensor (TD2) wiring trouble	Wiring/installation trouble or detachment of outdoor discharge temperature sensor (TD2) has been detected.
H16	01: TK1 oil circuit trouble 02: TK2 oil circuit trouble	H16	●	◎	●		Oil level detection circuit trouble	No temperature change is detected by temperature sensor for oil level detection (TK1,TK2) despite compressor having been started.
L04	–	L04	◎	○	◎	SIM	Duplicated outdoor refrigerant line address	Identical refrigerant line address has been assigned to outdoor units belonging to different refrigerant piping systems.
L06	Number of priority indoor units (check code L05 or L06 depending on individual unit)	L05	◎	●	◎	SIM	Duplicated priority indoor unit (as displayed on priority indoor unit)	More than one indoor unit have been set up as priority indoor unit.
		L06	◎	●	◎	SIM	Duplicated priority indoor unit (as displayed on indoor unit other than priority indoor unit)	More than one indoor unit have been set up as priority indoor unit.
L08	–	(L08)	◎	●	◎	SIM	Indoor group address not set	Address setting have not been performed for one or more indoor units (also detected at indoor end).
L10	–	L10	◎	○	◎	SIM	Outdoor capacity not set	Outdoor unit capacity has not been set (after P.C. board replacement).
L17	–	L17	◎	○	◎	SIM	Outdoor model incompatibility trouble	Old model outdoor unit has been connected.
L23	–	L23	◎	○	◎	SIM	SW setting mistake	
L28	–	L28	◎	○	◎	SIM	Too many outdoor units connected	More than five outdoor units have been connected.

Check code			Display of receiving unit				Typical problem site	Description of problem
Outdoor 7-segment display		Central control or main remote controller display	Indicator light block					
	Sub-code		Operation	Timer	Ready	Flash		
L29	<table><tr><th></th><th colspan="4">P.C.board</th><th></th><th colspan="4">P.C.board</th></tr><tr><th></th><th colspan="2">Compressor</th><th colspan="2">Fan Motor</th><th></th><th colspan="2">Compressor</th><th colspan="2">Fan Motor</th></tr><tr><th></th><th>1</th><th>2</th><th>1</th><th>2</th><th></th><th>1</th><th>2</th><th>1</th><th>2</th></tr><tr><td>01</td><td>O</td><td></td><td></td><td></td><td>11</td><td>O</td><td></td><td></td><td>O</td></tr><tr><td>02</td><td></td><td>O</td><td></td><td></td><td>12</td><td></td><td>O</td><td></td><td>O</td></tr><tr><td>03</td><td>O</td><td>O</td><td></td><td></td><td>13</td><td>O</td><td>O</td><td></td><td>O</td></tr><tr><td>08</td><td></td><td></td><td>O</td><td></td><td>18</td><td></td><td></td><td></td><td>O</td></tr><tr><td>09</td><td>O</td><td></td><td>O</td><td></td><td>19</td><td>O</td><td></td><td></td><td>O</td></tr><tr><td>0A</td><td></td><td>O</td><td>O</td><td></td><td>1A</td><td></td><td>O</td><td></td><td>O</td></tr><tr><td>0B</td><td>O</td><td>O</td><td>O</td><td></td><td>1B</td><td>O</td><td>O</td><td></td><td>O</td></tr><tr><td>10</td><td></td><td></td><td></td><td>O</td><td></td><td></td><td></td><td></td><td></td></tr></table>Circle (O): Trouble P.C. board	L29	◎	○	◎	SIM	Trouble in number of P.C. boards	There are insufficient number of P.C. board in inverter box.
L30	Detected indoor unit No.	(L30)	◎	○	◎	SIM	Indoor external trouble input (interlock)	Indoor unit has been shut down for external trouble input in one refrigerant line (detected by indoor unit).
P03	–	P03	◎	●	◎	ALT	Outdoor discharge (TD1) temperature trouble	Outdoor discharge temperature sensor (TD1) has detected abnormally high temperature.
P05	00: Power detection trouble 01: Open phase 02: Power supply miswiring	P05	◎	●	◎	ALT	Power detection trouble /Open phase detection /Power supply miswiring detection	Open phase is detected when power is turned on. Inverter DC voltage is too high (overvoltage) or too low (undervoltage).
P07	1 : Compressor 1 heat sink trouble 2 : Compressor 2 heat sink trouble	P07	◎	●	◎	ALT	Heat sink overheating trouble	Temperature sensor built into IPM (TH) detects overheating.
	04: Heat sink dew condensation						Heat sink dew condensation trouble	Outdoor liquid temperature sensor (TL2) has detected abnormally low temperature.
P10	Indoor unit No. detected	(P10)	●	◎	◎	ALT	Indoor unit overflow	Indoor unit has been shutdown in one refrigerant line due to detection of overflow (detected by indoor unit).
P11	–	P11	●	◎	◎	ALT	Outdoor heat exchanger freeze trouble	Remaining frost on outdoor heat exchanger has been detected repeatedly.
P13	–	P13	●	◎	◎	ALT	Outdoor liquid backflow detection trouble	State of refrigerant cycle circuit indicates liquid backflow operation.
P15	01: TS condition 02: TD condition	P15	◎	●	◎	ALT	Gas leak detection	Outdoor suction temperature sensor (TS1) detects sustained and repeated high temperatures that exceed standard value.
P17	–	P17	◎	●	◎	ALT	Outdoor discharge (TD2) temperature trouble	Outdoor discharge temperature sensor (TD2) detects abnormally high temperature.
P19	Outdoor unit No. detected	P19	◎	●	◎	ALT	4-way valve reversing trouble	Abnormality in refrigerating cycle is detected during heating operation.
P20	–	P20	◎	●	◎	ALT	Activation of high-pressure protection	High pressure (Pd) sensor detects high pressure that exceeds standard value.

MG-CTT: Magnet contactor

(Check code detected by Inverter of Compressor featuring in outdoor unit - typical examples)

Check code			Display of receiving unit				Typical problem site	Description of proplem
Outdoor 7-segment display		Central control or main remote controller display	Indicator light block					
	Sub-code		Operation	Timer	Ready	Flash		
F13	1∗: Compressor 1 2∗: Compressor 2	F13	◎	◎	○	ALT	Trouble in temperature sensor built into indoor IPM (TH)	Temperature sensor built into indoor IPM (TH) has been open/short-circuited.
H01	1∗: Compressor 1 2∗: Compressor 2	H01	●	◎	●		Compressor breakdown	Inverter current (Idc) detection circuit detects overcurrent.
H02	1∗: Compressor 1 2∗: Compressor 2	H02	●	◎	●		Compressor trouble (lockup)	Compressor lockup is detected
H03	1∗: Compressor 1 2∗: Compressor 2	H03	●	◎	●		Current detection circuit trouble	Abnormal current is detected while inverter compressor is turned off.
P04	01: Compressor 1 02: Compressor 2	P04	◎	●	◎	ALT	Activation of high-pressure SW	High-pressure SW is activated.
P05	01: Compressor 1 side 02: Compressor 2 side	P05	◎	●	◎	ALT	Compressor Vdc trouble	Inverter DC voltage is too high (overvoltage) or too low (undervoltage).
P07	01: Compressor 1 side 02: Compressor 2 side	P07	◎	●	◎	ALT	Heat sink overheat trouble	Temperature sensor built into IPM (TH) detects overheating.
P11	–	P11	●	◎	◎	ALT	Outdoor heat exchanger freeze trouble	Remaining frost on outdoor heat exchanger has been detected repeatedly.
P22	1∗: Fan P.C. board 1 2∗: Fan P.C. board 2	P22	◎	●	◎	ALT	Outdoor fan P.C. board trouble	Outdoor fan P.C. board detects trouble.
P26	1∗: Compressor 1 2∗: Compressor 2	P26	◎	●	◎	ALT	Activation of IPM, compressor short-circuit protection	Short-circuit protection for compressor motor driver circuit components is activated (momentary overcurrent).
P29	1∗: Compressor 1 2∗: Compressor 2	P29	◎	●	◎	ALT	Compressor position detection circuit trouble	Compressor motor position detection trouble is detected.

Note: The above check codes are examples only, and different check codes may be displayed depending on the outdoor unit configuration

9-3. Troubleshooting based on information displayed on remote controller

<RBC-AMT∗∗∗>

(1) Checking and testing

When a trouble occurs to an air conditioner, a check code and indoor unit No. are displayed on the display window of the remote controller. Check codes are only displayed while the air conditioner is in operation.
If the display has already disappeared, access check code history by following the procedure described below.

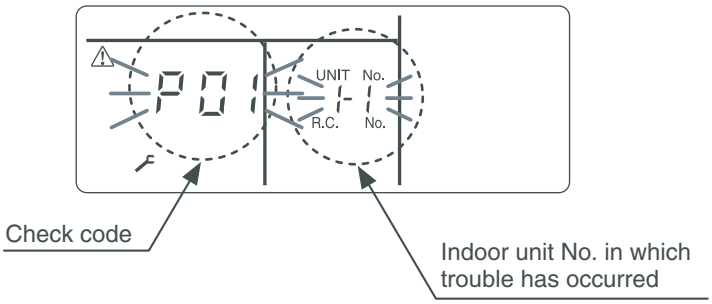

(2) Trouble history

The trouble history access procedure is described below (up to four check codes stored in memory).
Check code history can be accessed regardless of whether the air conditioner is in operation or shut down.

<Procedure> To be performed when system at rest

1 Invoke the SERVICE CHECK mode by pressing the TEST + SET buttons simultaneously and holding for at least 4 seconds.

The letters "SERVICE CHECK" light up, and the check code "01" is displayed, indicating the trouble history. This is accompanied by the indoor unit No. to which the trouble history is related and a check code.

2 To check other trouble history items, press the TEMP. button to select another check code.

Check code "01" (latest) → Check code "04" (oldest)
Note: Trouble history contains four items.

3 When the TEST button is pushed, normal display is restored.

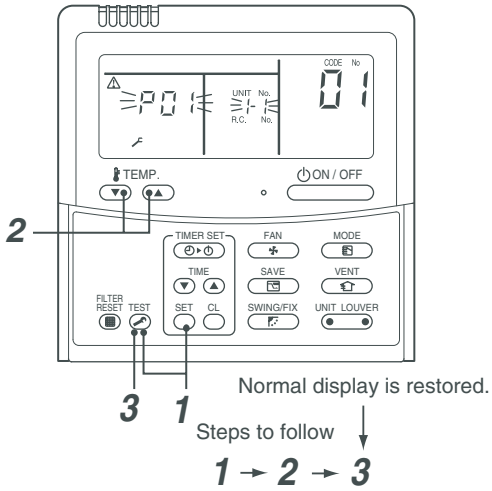

⚠ CAUTION

Do not push the CL button as it would erase the whole trouble history of the indoor unit.

<RBC-ASCU11-∗>

(1) Confirmation and check

If a problem occurs with the air conditioner, the OFF timer indicator alternately shows the check code and the indoor Unit No. in which the problem occurred.

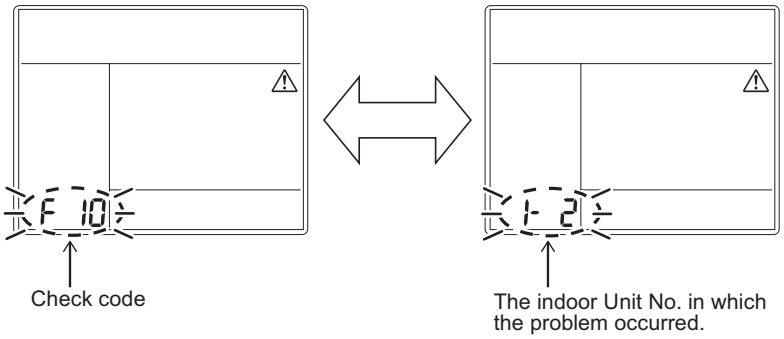

(2) Troubleshooting history and confirmation

You can check the troubleshooting history with the following procedure if a problem occurs with the air conditioner.
(The troubleshooting history records up to 4 incidents.)

You can check it during operation or when operation is stopped.

- If you check the troubleshooting history during OFF timer operation, the OFF timer will be canceled.

Procedure	Description of operation
1	Push the OFF timer button for over 10 seconds and the indicators appear as an image indicating the troubleshooting history mode has been entered. If [Service check] is displayed, the mode enters in the troubleshooting history mode. • [01: Order of troubleshooting history] appears in the temperature indicator. • The OFF timer indicator alternately shows the [check code] and the [indoor Unit No.] in which the problem occurred. 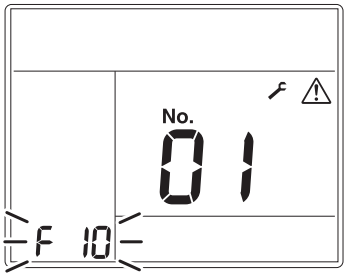
2	Each time the setting button is pushed, the recorded troubleshooting history is displayed in sequence. The troubleshooting history appears in order from [01] (newest) to [04] (oldest). **⚠ CAUTION** In the troubleshooting history mode, DO NOT push the Menu button for over 10 seconds, doing so deletes the entire troubleshooting history of the indoor unit. 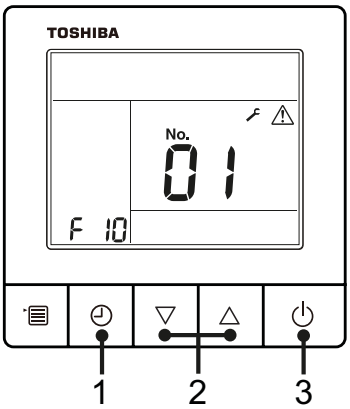
3	After you have finished checking, push the ON/OFF button to return to the regular mode. • If the air conditioner is operating, it remains operated even after the ON/OFF button has been pushed. To stop its operation, push the ON/OFF button again.

How to read displayed information

<7-segment display symbols>

<Corresponding alphanumerical letters>

0 1 2 3 4 5 6 7 8 9 A b C d E F H J L P

Using indoor unit indicators (receiving unit light block) (wireless type)

To identify the check code, check the 7-segment display on the header unit. To check for check codes not displayed on the 7-segment display, consult the “List of Check Codes (Indoor Unit)” in “9-2. Troubleshooting method”.

●: Goes off ○: Lighting ☼: Blinking (0.5 seconds)

Light block	Check code	Cause of trouble		
Operation ● Timer ● Ready ● All lights out	–	Power turned off or trouble in wiring between receiving and indoor units		
Operation ☼ Timer ● Ready ● Blinking	E01	Trouble reception	Receiving unit	Trouble or poor contact in wiring between receiving unit and indoor units
	E02	Trouble transmission		
	E03	Loss of communication		
	E08	Duplicated indoor unit No. (address)		Setting trouble
	E09	Duplicated master remote controller		
	E10	Communication trouble between indoor unit MCU		
	E11	Communication trouble between Application control kit and indoor unit P.C. board		
	E12	Automatic address starting trouble		
	E18	Trouble or poor contact in wiring between indoor units, indoor power turned off		
Operation ● Timer ● Ready ☼ Blinking	E04	Trouble or poor contact in wiring between indoor and outdoor units (loss of indoor-outdoor communication)		
	E06	Trouble reception in indoor-outdoor communication (dropping out of indoor unit)		
	E07	Trouble transmission in indoor-outdoor communication		
	E15	Indoor unit not found during automatic address setting		
	E16	Too many indoor units connected / overloading		
	E19	Trouble in number of outdoor header units		
	E20	Detection of refrigerant piping communication trouble during automatic address setting		
	E23	Trouble transmission in outdoor-outdoor communication		
	E25	Duplicated follower outdoor address		
	E26	Trouble reception in outdoor-outdoor communication, dropping out of outdoor unit		
	E28	Outdoor follower unit trouble		
	E31	P.C. board communication trouble		
Operation ● Timer ☼ Ready ☼ Alternate blinking	P01	Indoor AC fan trouble		
	P10	Indoor overflow trouble		
	P11	Outdoor heat exchanger freezing trouble		
	P12	Indoor DC fan trouble		
	P13	Outdoor liquid backflow detection trouble		
Operation ☼ Timer ● Ready ☼ Alternate blinking	P03	Outdoor discharge (TD1) temperature trouble		
	P04	Activation of outdoor high-pressure SW		
	P05	Open phase / power failure Inverter DC voltage (Vdc) trouble MG-CTT trouble		
	P07	Outdoor heat sink overheating trouble - Poor cooling of electrical component (IGBT) of outdoor unit		
	P15	Gas leak detection - insufficient refrigerant charging		
	P17	Outdoor discharge (TD2) temperature trouble		
	P18	Outdoor discharge (TD3) temperature trouble		
	P19	Outdoor 4-way valve reversing trouble		
	P20	Activation of high-pressure protection		
	P22	Outdoor fan P.C. board trouble		
	P26	Outdoor IPM, Compressor short-circuit trouble		
	P29	Compressor position detection circuit trouble		
	P31	Shutdown of other indoor unit in group due to trouble (group follower unit trouble)		

MG-CTT: Magnet contactor

Light block	Check code	Cause of trouble	
Operation Timer Ready Alternate blinking	F01	Heat exchanger temperature sensor (TCJ) trouble	Indoor unit temperature sensor trouble
	F02	Heat exchanger temperature sensor (TC2) trouble	
	F03	Heat exchanger temperature sensor (TC1) trouble	
	F10	Ambient temperature sensor (TA) trouble	
	F11	Discharge temperature sensor (TF) trouble	
Operation Timer Ready Alternate blinking	F04	Discharge temperature sensor (TD1) trouble Discharge	Outdoor unit temperature sensor trouble
	F05	temperature sensor (TD2) trouble	
	F06	Heat exchanger temperature sensor (TE1, TE2) trouble	
	F07	Liquid temperature sensor (TL) trouble	
	F08	Outside air temperature sensor (TO) trouble	
	F09	TG1,TG2 or TG3 sensor trouble	
	F12	Suction temperature sensor (TS1) trouble	
	F13	Heat sink sensor (TH) trouble	
	F15	Wiring trouble in heat exchanger sensor (TE1) and liquid temperature sensor (TL) Outdoor unit temperature sensor wiring / installation trouble	
	F16	Wiring trouble in outdoor high pressure sensor (Pd) and low pressure sensor (Ps) Outdoor pressure sensor wiring trouble	
	F22	Outdoor discharge temperature sensor (TD3) trouble	Outdoor unit pressure sensor trouble
	F23	Low pressure sensor (Ps) trouble	
	F24	High pressure sensor (Pd) trouble	
	F30	Occupancy sensor trouble	
	F31	Indoor unit EEPROM trouble	
Operation Timer Ready Synchronized blinking	F29	Failure in indoor EEPROM	
Operation Timer Ready Blinking	H01	Compressor breakdown	Outdoor unit compressor related trouble
	H02	Compressor lockup	
	H03	Current detection circuit trouble	
	H04	Comp. 1 case thermostat operation	
	H05	Wiring / installation trouble or detachment of outdoor discharge temperature sensor (TD1)	
	H06	Abnormal drop in low-pressure sensor (Ps) reading	Protective shutdown of outdoor unit
	H07	Abnormal drop in oil level	
	H08	Trouble in temperature sensor for oil level detection circuit (TK1, TK2, TK3, TK4 or TK5)	
	F14	Comp. 2 case thermostat operation	
	H15	Wiring / installation trouble or detachment of outdoor discharge temperature sensor (TD2)	
	H16	Oil level detection circuit trouble - Trouble in outdoor unit TK1, TK2, TK3, TK4 or TK5 circuit	
	H25	Wiring / installation trouble or detachment of outdoor discharge temperature sensor (TD3)	
Operation Timer Ready Synchronized blinking	L02	Model mismatched of indoor and outdoor unit	
	L03	Duplicated indoor group header unit	
	L05	Duplicated priority indoor unit (as displayed on priority indoor unit)	
	L06	Duplicated priority indoor unit (as displayed on indoor unit other than priority indoor unit)	
	L07	Connection of group control cable to a single indoor unit	
	L08	Indoor group address not set	
	L09	Indoor capacity not set	
Operation Timer Ready Synchronized blinking	L04	Duplicated outdoor refrigerant line address	
	L10	Outdoor capacity not set	
	L17	Outdoor model incompatibility trouble	
	L18	Flow selector units trouble	
	L20	Duplicated central control address	
	L28	Too many outdoor units connected	
	L29	Trouble in number of P.C. boards	
	L30	Indoor external interlock trouble (External abnormal input)	

Light block	Check code	Cause of trouble
Operation Timer Ready Synchronized blinking	F30	Occupancy sensor trouble
	F31	Outdoor EEPROM trouble

Other (indications not involving check code)

Light block	Check code	Cause of trouble
Operation Timer Ready Synchronized blinking	–	Test run in progress
Operation Timer Ready Alternate blinking	–	Setting incompatibility (automatic cooling / heating setting for model incapable of it and heating setting for cooling-only model)

Flow selector unit (FS unit) Relation

Light block	Check code	Cause of trouble
Operation Timer Ready Blinking	E17	Communication trouble between indoor unit(s) and FS unit(s)
Operation Timer Ready Synchronized blinking	L12	FS unit(s) system trouble
	L24	FS unit(s) setting trouble
Operation Timer Ready Blinking Blinking	J03	Duplicated FS units
	J10	FS unit overflow trouble
	J11	FS unit temperature sensor(TCS) trouble

9-4. Check Codes Displayed on Remote Controller and SMMS series Outdoor Unit (7-Segment Display on I/F Board) and Locations to Be Checked

For other types of outdoor units, refer to their own service manuals.

Check code			Location of detection	Description	System status	Check code detection condition(s)	Check items (locations)
Main remote controller	Outdoor 7-segment display						
	Check code	Sub-code					
E01	—	—	Remote controller	Indoor-remote controller communication trouble (detected at remote controller end)	Stop of corresponding unit	Communication between indoor P.C. board and remote controller is disrupted.	• Check remote controller inter-unit tie cable (A/B). • Check for broken wire or connector bad contact. • Check indoor power supply. • Check for failure in indoor P.C. board. • Check remote controller address settings (when two remote controllers are in use). • Check remote controller P.C. board.
E02	—	—	Remote controller	Remote controller transmission trouble	Stop of corresponding unit	Signal cannot be transmitted from remote controller to indoor unit.	• Check internal transmission circuit of remote controller. --- Replace remote controller as necessary.
E03	—	—	Indoor unit	Indoor-remote controller communication trouble (detected at indoor end)	Stop of corresponding unit	There is no communication from remote controller (including wireless) or network adaptor.	• Check remote controller and network adaptor wiring.
E04	—	—	Indoor unit	Indoor-outdoor communication circuit trouble (detected at indoor end)	Stop of corresponding unit	Indoor unit is not receiving signal from outdoor unit.	• Check order in which power was turned on for indoor and outdoor units. • Check indoor address setting. • Check indoor-outdoor tie cable. • Check outdoor terminator resistor setting (SW100, Bit 2).
E04	E06	No. of indoor units from which signal is received normally	I/F	Dropping out of indoor unit	All stop	**Condition 1** All indoor unit initially communicating normally fails to return signal for specified length of time. **Condition 2** Outdoor I / F board SW103, Bit4 : OFF (Factory default)	• Check power supply to indoor unit. (Is power turned on?) • Check connection of indoor-outdoor communication cable. • Check connection of communication connectors on indoor P.C. board. • Check connection of communication connectors on outdoor P.C. board. • Check for failure in indoor P.C. board. • Check for failure in outdoor P.C. board (I/F).
	—	—	Indoor unit	Indoor-outdoor communication circuit trouble	Only specified indoor units stop	**Condition 1** Indoor unit initially communicating normally fails to return signal for specified length of time.	• Check power supply to indoor unit. (Is power turned on?) • Check indoor-outdoor power-on sequence. • Check indoor address setting • Check wiring of Indoor-outdoor communication wires • Check outdoor terminator resistor setting (SW100, Bit 2).

Check code			Location of detection	Description	System status	Check code detection condition(s)	Check items (locations)
Main remote controller	Outdoor 7-segment display						
	Check code	Sub-code					
E04/E06	E06	No. of indoor units from which signal is received normally	Indoor unit	Indoor-outdoor communication circuit trouble (E04)	All stop	**Condition 1** One indoor unit or more initially communicating normally fails to return signal for specified length of time. **Condition 2** Outdoor I / F board SW103, Bit4 : ON (To switch the check code detection condition.) SW103 ON 1 2 3 4 Display on main remote controller. Indoor units unavailable for indoor / outdoor communication. :E04 Indoor units available for indoor / outdoor communication. : E06	• Check power supply to indoor unit. (Is power turned on?) • Check indoor-outdoor power-on sequence. • Check indoor address setting • Check wiring of Indoor-outdoor communication wires • Check outdoor terminator resistor setting (SW100, Bit 2).
			I/F	Dropping out of indoor unit (E06)			• Check power supply to indoor unit. (Is power turned on?) • Check connection of indoor-outdoor communication cable. • Check connection of communication connectors on indoor P.C. board. • Check connection of communication connectors on outdoor P.C. board. • Check for failure in indoor P.C. board. • Check for failure in outdoor P.C. board (I/F).
—	E07	—	I/F	Indoor-outdoor communication circuit trouble (detected at outdoor end)	All stop	Signal cannot be transmitted from outdoor to indoor units for 30 seconds continuously.	• Check outdoor terminator resistor setting (SW100, Bit 2). • Check connection of indoor-outdoor communication circuit.
E08	E08	Duplicated indoor address	Indoor unit I/F	Duplicated indoor address	All stop	More than one indoor unit are assigned same address.	• Check indoor addresses. • Check for any change made to remote controller connection (group/ individual) since indoor address setting.
E09	—	—	Remote controller	Duplicated master remote controller	Stop of corresponding unit	In two remote controller configuration (including wireless), both controllers are set up as master. (Header indoor unit is shut down with alarm, while follower indoor units continue operating.)	• Check remote controller settings. • Check remote controller P.C. boards.
E10	—	—	Indoor unit	Indoor inter-MCU communication trouble	Stop of corresponding unit	Communication cannot be established/maintained upon turning on of power or during communication.	• Check for failure in indoor P.C. board
E12	E12	01: Indoor-outdoor communication 02: Outdoor-outdoor communication	I/F	Automatic address starting trouble	All stop	• Indoor automatic address setting is started while automatic address setting for equipment in other refrigerant line is in progress. • Outdoor automatic address setting is started while automatic address setting for indoor units is in progress.	• Perform automatic address setting again after disconnecting communication cable to that refrigerant line.
E15	E15	—	I/F	Indoor unit not found during automatic address setting	All stop	Indoor unit cannot be detected after indoor automatic address setting is started.	• Check connection of indoor-outdoor communication line. • Check for trouble in indoor power supply system. • Check for noise from other devices. • Check for power failure. • Check for failure in indoor P.C. board.

Check code			Location of detection	Description	System status	Check code detection condition(s)	Check items (locations)
Main remote controller	Outdoor 7-segment display						
	Check code	Sub-code					
E16	E16	00: Capacity over 01-: No. of units connected	I/F	Too many indoor units connected	All stop	• Combined capacity of indoor units is too large. **Note:** **If this code comes up after backup setting for outdoor unit failure is performed, perform "No capacity over detected" setting.** <"No capacity over detected" setting method> Turn on SW103 / Bit 3 on I/F P.C. board of outdoor header unit. For Cooling Only model, this check code is not displayed even if it exceeds the combined capacity of indoor units. • More than 128 indoor units are connected.	• Check capacities of indoor units connected. • Check combined HP capacities of indoor units. • Check HP capacity settings of outdoor units. • Check No. of indoor units connected. • Check for failure in outdoor P.C. board (I/F).
E18	—	—	Indoor unit	Trouble in communication between indoor header and follower units	Stop of corresponding unit	Periodic communication between indoor header and follower units cannot be maintained.	• Check remote controller wiring. • Check indoor power supply wiring. • Check P.C. boards of indoor units.
E19	E19	00: No header unit 02: Two or more header units	I/F	Trouble in number of outdoor header units	All stop	• There are more than one outdoor header units in one line. • There is no outdoor header unit in one line.	Outdoor header unit is outdoor unit to which indoor-outdoor tie cable (U1,U2) is connected. • Check connection of indoor-outdoor communication line. • Check for failure in outdoor P.C. board (I/F).
E20	E20	01: Connection of outdoor unit from other line 02: Connection of indoor unit from other line	I/F	Connection to other line found during automatic address setting	All stop	Equipment from other line is found to have been connected when indoor automatic address setting is in progress.	Disconnect inter-line tie cable in accordance with automatic address setting method explained in "Address setting" section.
E23	E23	—	I/F	Outdooroutdoor communication transmission trouble	All stop	Signal cannot be transmitted to other outdoor units for at least 30 seconds continuously.	• Check power supply to outdoor units. (Is power turned on?) • Check connection of tie cables between outdoor units for bad contact or broken wire. • Check communication connectors on outdoor P.C. boards. • Check for failure in outdoor P.C. board (I/F). • Check termination resistance setting for communication between outdoor units.
E25	E25	—	I/F	Duplicated follower outdoor address	All stop	There is duplication in outdoor addresses set manually.	**Note:** **Do not set outdoor addresses manually.**
E26	E26	Address of outdoor unit from which signal is not received normally	I/F	Signal lack of outdoor unit	All stop	Outdoor unit initially communicating normally fails to return signal for specified length of time.	• Backup setting is being used for outdoor units. • Check power supply to outdoor unit. (Is power turned on?) • Check connection of tie cables between outdoor units for bad contact or broken wire. • Check communication connectors on outdoor P.C. boards. • Check for failure in outdoor P.C. board (I/F).

<table>
<tr><th colspan="3">Check code</th><th rowspan="3">Location of detection</th><th rowspan="3">Description</th><th rowspan="3">System status</th><th rowspan="3">Check code detection condition(s)</th><th rowspan="3">Check items (locations)</th></tr>
<tr><th rowspan="2">Main remote controller</th><th colspan="2">Outdoor 7-segment display</th></tr>
<tr><th>Check code</th><th>Sub-code</th></tr>
<tr><td>E28</td><td>E28</td><td>Detected outdoor unit No.</td><td>I/F</td><td>Outdoor follower unit trouble</td><td>All stop</td><td>Outdoor header unit receives trouble code from outdoor follower unit.</td><td>• Check check code displayed on outdoor follower unit.
<Convenient functions>
If SW04 is pressed and held for at least 1 second while [E28] is displayed on the 7-segment display of outdoor header unit, the fan of the outdoor unit that has been shut down due to an trouble comes on.
If SW04 and SW05 are pressed simultaneously, the fans of normal outdoor units come on.
To stop the fan or fans, press SW05 on its own.</td></tr>
<tr><td rowspan="2">E31</td><td rowspan="2">E31</td><td><table><tr><th></th><th colspan="4">P.C.board</th></tr><tr><th></th><th colspan="2">Compressor</th><th colspan="2">Fan Motor</th></tr><tr><th></th><th>1</th><th>2</th><th>1</th><th>2</th></tr><tr><td>01</td><td>O</td><td></td><td></td><td></td></tr><tr><td>02</td><td></td><td>O</td><td></td><td></td></tr><tr><td>03</td><td>O</td><td>O</td><td></td><td></td></tr><tr><td>08</td><td></td><td></td><td>O</td><td></td></tr><tr><td>09</td><td>O</td><td></td><td>O</td><td></td></tr><tr><td>0A</td><td></td><td>O</td><td>O</td><td></td></tr><tr><td>0B</td><td>O</td><td>O</td><td>O</td><td></td></tr><tr><td>10</td><td></td><td></td><td></td><td>O</td></tr><tr><td>11</td><td>O</td><td></td><td></td><td>O</td></tr><tr><td>12</td><td></td><td>O</td><td></td><td>O</td></tr><tr><td>13</td><td>O</td><td>O</td><td></td><td>O</td></tr><tr><td>18</td><td></td><td></td><td></td><td>O</td></tr><tr><td>19</td><td>O</td><td></td><td></td><td>O</td></tr><tr><td>1A</td><td></td><td>O</td><td></td><td>O</td></tr><tr><td>1B</td><td>O</td><td>O</td><td></td><td>O</td></tr></table>Circle (O): Trouble P.C. board</td><td>I/F</td><td>P.C. board communication trouble</td><td>All stop</td><td>Communication is disrupted between P.C. board in inverter box.</td><td>• Check wiring and connectors involved in communication between P.C. board I/F P.C. board for bad contact or broken wire.
• Check for failure in outdoor P.C. board (I/F, comp. P.C. board or Fan P.C. board).
• Check for external noise.</td></tr>
<tr><td>80</td><td></td><td>Communication trouble between MCU and Sub MCU</td><td>All stop</td><td>Communication between MCU and Sub MCU stopped.</td><td>• Operation of power supply reset (OFF for 60 seconds or more)
• Outdoor I/F PC board trouble check</td></tr>
<tr><td>F01</td><td>—</td><td>—</td><td>Indoor unit</td><td>Indoor TCJ sensor trouble</td><td>Stop of corresponding unit</td><td>Sensor resistance is infinity or zero (open/short circuit).</td><td>• Check connection of TCJ sensor connector and wiring.
• Check resistance characteristics of TCJ sensor.
• Check for failure in indoor P.C. board.</td></tr>
<tr><td>F02</td><td>—</td><td>—</td><td>Indoor unit</td><td>Indoor TC2 sensor trouble</td><td>Stop of corresponding unit</td><td>Sensor resistance is infinity or zero (open/short circuit).</td><td>• Check connection of TC2 sensor connector and wiring.
• Check resistance characteristics of TC2 sensor.
• Check for failure in indoor P.C. board.</td></tr>
<tr><td>F03</td><td>—</td><td>—</td><td>Indoor unit</td><td>Indoor TC1 sensor trouble</td><td>Stop of corresponding unit</td><td>Sensor resistance is infinity or zero (open/short circuit).</td><td>• Check connection of TC1 sensor connector and wiring.
• Check resistance characteristics of TC1 sensor.
• Check for failure in indoor P.C. board.</td></tr>
<tr><td>F04</td><td>F04</td><td>—</td><td>I/F</td><td>TD1 sensor trouble</td><td>All stop</td><td>Sensor resistance is infinity or zero (open/short circuit).</td><td>• Check connection of TD1 sensor connector.
• Check resistance characteristics of TD1 sensor.
• Check for failure in outdoor P.C. board (I/F).</td></tr>
</table>

Check code			Location of detection	Description	System status	Check code detection condition(s)	Check items (locations)
Main remote controller	Outdoor 7-segment display						
	Check code	Sub-code					
F05	F05	—	I/F	TD2 sensor trouble	All stop	Sensor resistance is infinity or zero (open/short circuit).	• Check connection of TD2 sensor connector. • Check resistance characteristics of TD2 sensor. • Check for failure in outdoor P.C. board (I/F).
F06	F06	01: TE1 sensor trouble 02: TE2 sensor trouble 03: TE3 sensor trouble	I/F	TE1/TE2/TE3 sensor trouble	All stop	Sensor resistance is infinity or zero (open/short circuit).	• Check connection of TE1/TE2/TE3 sensor connectors. • Check resistance characteristics of TE1/TE2/TE3 sensors. • Check for failure in outdoor P.C. board (I/F).
F07	F07	01: TL1 sensor trouble 02: TL2 sensor trouble 03: TL3 sensor trouble	I/F	TL1/TL2/TL3 sensor trouble	All stop	Sensor resistance is infinity or zero (open/short circuit).	• Check connection of TL1/TL2/TL3 sensor connector. • Check resistance characteristics of TL1/TL2/TL3 sensor. • Check for failure in outdoor P.C. board (I/F).
F08	F08	—	I/F	TO sensor trouble	All stop	Sensor resistance is infinity or zero (open/short circuit).	• Check connection of TO sensor connector. • Check resistance characteristics of TO sensor. • Check for failure in outdoor P.C. board (I/F).
F09	F09	01: TG1 sensor trouble 02: TG2 sensor trouble 03: TG3 sensor trouble	I/F	TG1/TG2/TG3 sensor trouble	All stop	Sensor resistance is infinity or zero (open/short circuit).	• Check connection of TG1/TG2/TG3 sensor connectors. • Check resistance characteristics of TG1/TG2/TG3 sensors. • Check for failure in outdoor P.C. board (I/F).
F10	—	—	Indoor unit	Indoor TA sensor trouble	Stop of corresponding unit	Sensor resistance is infinity or zero (open/short circuit).	• Check connection of TA sensor connector and wiring. • Check resistance characteristics of TA sensor. • Check for failure in indoor P.C. board.
F11	—	—	Indoor unit	Indoor TF sensor trouble	Stop of corresponding unit	Sensor resistance is infinity or zero (open/short circuit).	• Check connection of TF sensor connector and wiring. • Check resistance characteristics of TF sensor. • Check for failure in indoor P.C. board.
F12	F12	01: TS1 sensor trouble 03: TS3 sensor trouble	I/F	TS1/TS3 sensor trouble	All stop	Sensor resistance is infinity or zero (open/short circuit).	• Check connection of TS1/TS3 sensor connector • Check resistance characteristics of TS1/TS3 sensor. • Check for failure in indoor P.C. board.
F13	F13	1∗: Compressor 1 side 2∗: Compressor 2 side	Compressor P.C. board	TH sensor trouble	All stop	Sensor resistance is infinity or zero (open/short circuit).	• Failure in IPM built-in temperature sensor → Replace Compressor P.C. board.
F15	F15	—	I/F	Outdoor temperature sensor wiring trouble (TE1, TL1)	All stop	During compressor operation in HEAT mode, TL1 continuously provides temperature reading higher than indicated by TL1 by at least specified margin for 3 minutes or more.	• Check installation of TE1 and TL1 sensors. • Check resistance characteristics of TE1 and TL1 sensors. • Check for outdoor P.C. board (I/F) trouble

Check code			Location of detection	Description	System status	Check code detection condition(s)	Check items (locations)
Main remote controller	Outdoor 7-segment display						
	Check code	Sub-code					
F16	F16	—	I/F	Outdoor pressure sensor wiring trouble (Pd, Ps)	All stop	Readings of high-pressure Pd sensor and low-pressure Ps sensor are switched. Output voltages of both sensors are zero.	• Check connection of high-pressure Pd sensor connector. • Check connection of low-pressure Ps sensor connector. • Check for failure in pressure sensors Pd and Ps. • Check for trouble in outdoor P.C. board (I/F). • Check for compressor poor compression.
F23	F23	—	I/F	Ps sensor trouble	All stop	Output voltage of Ps sensor is zero.	• Check for connection trouble involving Ps sensor and Pd sensor connectors. • Check connection of Ps sensor connector. • Check for failure in Ps sensor. • Check for compressor poor compression. • Check for failure in 4-way valve. • Check for failure in outdoor P.C. board (I/F). • Check for failure in SV4 circuit.
F24	F24	—	I/F	Pd sensor trouble	All stop	Output voltage of Pd sensor is zero (sensor open-circuited). Pd > 4.15MPa despite compressor having been turned off.	• Check connection of Pd sensor connector. • Check for failure in Pd sensor. • Check for failure in outdoor P.C. board (I/F).
F29	—	—	Indoor unit	Other indoor trouble	Stop of corresponding unit	Indoor P.C. board does not operate normally.	• Check for failure in indoor P.C. board (failure EEPROM)
F31	F31	—	I/F	Outdoor EEPROM trouble	All stop *1	Outdoor P.C. board (I/F) does not operate normally.	• Check power supply voltage. • Check power supply noise. • Check for failure in outdoor P.C. board (I/F).
H01	H01	1∗: Compressor 1 side 2∗: Compressor 2 side	Compressor P.C. board	Compressor breakdown	All stop	Inverter current detection circuit detects overcurrent and shuts system down.	• Check power supply voltage. (AC380V-415V ± 10%). • Check for failure in compressor. • Check for possible cause of abnormal overloading. • Check for failure in outdoor P.C. board (Compressor).
H02	H02	1∗: Compressor 1 side 2∗: Compressor 2 side	Compressor P.C. board	Compressor trouble (lockup) MG-CTT trouble	All stop	Overcurrent is detected several seconds after startup of inverter compressor.	• Check for failure in compressor. • Check power supply voltage. (AC380V-415V ± 10%). • Check compressor system wiring, particularly for open phase. • Check connection of connectors/terminals on compressor P.C. board. • Check conductivity of case heater. (Check for refrigerant problem inside compressor.) • Check for failure in outdoor P.C. board (Compressor). • Check outdoor MG-CTT.
H03	H03	1∗: Compressor 1 side 2∗: Compressor 2 side	Compressor P.C. board	Current detection circuit trouble	All stop	Current flow of at least specified magnitude is detected despite inverter compressor having been shut turned off.	• Check current detection circuit wiring. • Check failure in outdoor P.C. board (Compressor).

*1 Total shutdown in case of header unit
Continued operation in case of follower unit

Check code			Location of detection	Description	System status	Check code detection condition(s)	Check items (locations)
Main remote controller	Outdoor 7-segment display						
	Check code	Sub-code					
H05	H05	—	I/F	TD1 sensor miswiring (incomplete insertion)	All stop	Discharge temperature of compressor 1 (TD1) does not increase despite compressor being in operation.	• Check installation of TD1 sensor. • Check connection of TD1 sensor connector and wiring. • Check resistance characteristics of TD1 sensor. • Check for failure in outdoor P.C. board (I/F).
H06	H06	—	I/F	Activation of low-pressure protection	All stop	Low-pressure Ps sensor detects operating pressure lower than 0.02MPa.	• Check service valves to confirm full opening (both gas and liquid sides). • Check outdoor PMVs for clogging (PMV1, 2, 3). • Check for failure in SV4 circuits. • Check for failure in low-pressure Ps sensor. • Check indoor filter for clogging. • Check valve opening status of indoor PMV. • Check refrigerant piping for clogging. • Check operation of outdoor fan (during heating). • Check for insufficiency in refrigerant quantity.
H07	H07	—	I/F	Low oil level protection	All stop	Operating compressor detects continuous state of low oil level for about 2 hours.	<All outdoor units in corresponding line to be checked> • Check connection and installation of TK1 and TK2 sensors. • Check resistance characteristics of TK1 and TK2 sensors. • Check for gas or oil leak in same line. • Check for refrigerant problem inside compressor casing. • Check SV3D, SV3F valves for failure. • Check oil return circuit of oil separator for clogging. • Check oil equalizing circuit for clogging.
H08	H08	01: TK1 sensor trouble 02: TK2 sensor trouble	I/F	Trouble in temperature sensor for oil level detection	All stop	Sensor resistance is infinity or zero (open/short circuit).	• Check connection of TK1 sensor connector. • Check resistance characteristics of TK1 sensor. • Check for failure in outdoor P.C. board (I/F).
					All stop	Sensor resistance is infinity or zero (open/short circuit).	• Check connection of TK2 sensor connector. • Check resistance characteristics of TK2 sensor. • Check for failure in outdoor P.C. board (I/F).
H15	H15	—	I/F	TD2 sensor miswiring (incomplete insertion)	All stop	Discharge temperature of (TD2) does not increase despite compressor 2 being in operation.	• Check installation of TD2 sensor. • Check connection of TD2 sensor connector and wiring. • Check resistance characteristics of TD2 sensor. • Check for failure in outdoor P.C. board (I/F).

Check code			Location of detection	Description	System status	Check code detection condition(s)	Check items (locations)
Main remote controller	Outdoor 7-segment display						
	Check code	Sub-code					
H16	H16	01: TK1 oil circuit trouble 02: TK2 oil circuit trouble	I/F	Oil level detection circuit trouble	All stop	No temperature change is detected by TK1 despite compressor 1 having been started.	• Check for disconnection of TK1 sensor. • Check resistance characteristics of TK1 sensor. • Check for connection trouble involving TK1 and TK2 sensors • Check for clogging in oil equalizing circuit capillary. • Check for refrigerant entrapment inside compressor.
						No temperature change is detected by TK2 despite compressor 2 having been started.	• Check for disconnection of TK2 sensor. • Check resistance characteristics of TK2 sensor. • Check for connection trouble involving TK1 and TK2 sensors • Check SV3F valve malfunction. • Check for clogging in oil equalizing circuit capillary. • Check for refrigerant entrapment inside compressor.
H17	H17	1∗: Compressor 1 side 2∗: Compressor 2 side	Compressor P.C. board	Compressor trouble (Step-out)	All stop	Judged that the synchronization could not be taken.	• Check power supply voltage. (AC380V-415V ± 10%). • Check for failure in compressor. • Check for possible cause of abnormal overloading. • Check for failure in outdoor P.C. board (compressor).
L02	L02	—	Indoor unit	Outdoor units model disagreement trouble	Stop of corresponding unit	In case of different outdoor unit (Not corresponded to Air to Air Heat Exchanger type)	• Check outdoor unit model. (Check whether the outdoor unit corresponds to Air to Air Heat Exchanger type or not.)
L03	—	—	Indoor unit	Duplicated indoor header unit	Stop of corresponding unit	There are more than one header units in group.	• Check indoor addresses. • Check for any change made to remote controller connection (group/ individual) since indoor address setting.
L04	L04	—	I/F	Duplicated outdoor line address	All stop	There is duplication in line address setting for outdoor units belonging to different refrigerant piping systems.	• Check line addresses.
L05	—	—	I/F	Duplicated priority indoor unit (as displayed on priority indoor unit)	All stop	More than one indoor units have been set up as priority indoor unit.	• Check display on priority indoor unit.
L06	L06	No. of priority indoor units	I/F	Duplicated priority indoor unit (as displayed on indoor unit other than priority indoor unit)	All stop	More than one indoor units have been set up as priority indoor unit.	• Check displays on priority indoor unit and outdoor unit.
L07	—	—	Indoor unit	Connection of group control cable to standalone indoor unit	Stop of corresponding unit	There is at least one standalone indoor unit to which group control cable is connected.	• Check indoor addresses.
L08	L08	—	Indoor unit	Indoor group / addresses not set	Stop of corresponding unit	Address setting has not been performed for indoor units.	• Check indoor addresses. **Note:** **This code is displayed when power is turned on for the first time after installation.**
L09	—	—	Indoor unit	Indoor capacity not set	Stop of corresponding unit	Capacity setting has not been performed for indoor unit.	Set indoor capacity. (DN = 11)

Check code			Location of detection	Description	System status	Check code detection condition(s)	Check items (locations)
Main remote controller	Outdoor 7-segment display						
	Check code	Sub-code					
L10	L10	—	I/F	Outdoor capacity not set	All stop	Initial setting of I/F P.C. board has not been implemented.	• Check model setting of P.C. board for servicing outdoor I/F P.C. board.
L20	—	—	Network adaptor Indoor unit	Duplicated central control address	All stop	There is duplication in central control address setting.	• Check central control addresses.
L23	—	—	I/F	SW setting mistake	All stop	Outdoor P.C. board (I/F) does not operate normally.	• Check switch setting of outdoor P.C. board (I/F).
L28	L28	—	I/F	Too many outdoor units connected	All stop	There are more than 5 outdoor units.	• Check No. of outdoor units connected (Only up to 5 units per system allowed). • Check communication lines between outdoor units. • Check for failure in outdoor P.C. board (I/F).
L29	L29	P.C.board Compressor 1, Compressor 2, Fan Motor 1, Fan Motor 2 01: O 02: O 03: O O 08: O 09: O O 0A: O O 0B: O O O 10: O 11: O O 12: O O 13: O O O 18: O 19: O O 1A: O O 1B: O O O Circle (O): Trouble P.C. board	I/F	Trouble in No. of P.C. board	All stop	Insufficient number of P.C. board are detected when power is turned on.	• Check model setting of P.C. board for servicing outdoor I/F P.C. board. • Check connection of UART communication connector. • Check compressor P.C. board, fan P.C. board, and I/F P.C. board for failure.
L30	L30	Detected indoor address	Indoor unit	Indoor external interlock (External abnormal input)	Stop of corresponding unit	• Indoor unit has been shut down due to external abnormal input signal.	**When external device is connected:** 1) Check for trouble in external device. 2) Check for trouble in indoor P.C. board. **When external device is not connected:** 1) Check for trouble in indoor P.C. board.
—	L31	—	I/F	Extended IC trouble	Continued operation	There is part failure in P.C. board (I/F).	Check outdoor P.C. board (I/F).
P01	—	—	Indoor unit	Indoor fan motor trouble	Stop of corresponding unit		• Check the lock of fan motor (AC fan). • Check wiring.
P03	P03	—	I/F	Discharge temperature TD1 trouble	All stop	Discharge temperature (TD1) exceeds 115 ˚C.	• Check outdoor service valves (gas side, liquid side) to confirm full opening. • Check outdoor PMVs (PMV1, 2, 3, 4) for clogging. • Check resistance characteristics of TD1 sensor. • Check for insufficiency in refrigerant quantity. • Check for failure in 4-way valve. • Check for leakage of SV4 circuit. • Check SV4 circuit (wiring or installation trouble in SV41 or SV42).

Check code			Location of detection	Description	System status	Check code detection condition(s)	Check items (locations)
Main remote controller	Outdoor 7-segment display						
	Check code	Sub-code					
P04	P04	1∗: Compressor 1 side 2∗: Compressor 2 side	I/F	Activation of high-pressure SW	All stop	High-pressure SW is activated.	• Check connection of high-pressure SW connector. • Check for failure in Pd pressure sensor. • Check outdoor service valves (gas side, liquid side) to confirm full opening. • Check for failure in outdoor fan. • Check for failure in outdoor fan motor. • Check outdoor PMVs (PMV1, 2, 3) for clogging. • Check indoor/outdoor heat exchangers for clogging. • Check for short-circuiting of outdoor suction/discharge air flows. • Check for failure in outdoor P.C. board (I/F). • Check for trouble in indoor fan system (possible cause of air flow reduction). • Check opening status of indoor PMV. • Check indoor-outdoor communication line for wiring trouble. • Check for failure operation of check valve in discharge pipe convergent section. • Check gas balancing SV4 valve circuit. • Check for refrigerant overcharging.
P05	P05	00: Power detection trouble 01: Open phase 02: Power supply miswiring	I/F	Power detection trouble / Open phase detection / Power supply miswiring	All stop	• Open phase is detected when power is turned on. • Inverter DC voltage is too high (overvoltage) or too low (undervoltage).	• Check for failure in outdoor P.C. board (I/F). • Check wiring of outdoor power supply. • Check power supply voltage.
		1∗: Compressor 1 side 2∗: Compressor 2 side	Compressor P.C. board	Compressor Vdc trouble			
P07	P07	1∗: Compressor 1 side 2∗: Compressor 2 side	Compressor P.C. board	Heat sink overheating trouble	All stop	Temperature sensor built into IPM (TH) is overheated.	• Check outdoor fan system trouble. • Check IPM and heat sink for thermal performance for failure installation. (e.g. mounting screws and thermal conductivity) • Check for failure in Compressor P.C. board. (failure IPM built-in temperature sensor (TH))
		01: Compressor 1 heat sink trouble 02: Compressor 2 heat sink trouble 04: Heat sink dew condensation	I/F	Heat sink overheating trouble Heat sink dew condensation trouble	All stop	Condensation detection on heat sink has occurred four times or more in operation. Temperature sensor built into IPM (TH) is overheated.	• Check outdoor fan system trouble. • Check IPM and heat sink for thermal performance for troubled installation. (e. g. mounting screws and thermal conductivity) • Check for failure in compressor P.C. board. (failure IPM built-in temperature sensor (TH)) • Check shortage of refrigerant. • Check outdoor service valves. • Check connection of TL2 sensor. • Check resistance characteristics of TL2 sensor. • Check resistance characteristics of TO sensor. • Check malfunctions of Pd and Ps sensors. • Check outdoor I/F P.C. board malfunction. • Check PMV2 and PMV3

Check code			Location of detection	Description	System status	Check code detection condition(s)	Check items (locations)
Main remote controller	Outdoor 7-segment display						
	Check code	Sub-code					
P10	P10	Detected indoor address	Indoor unit	Indoor overflow trouble	All stop	• Float switch operates. • Float switch circuit is open-circuited or disconnected at connector.	• Check float switch connector. • Check operation of drain pump. • Check drain pump circuit. • Check drain pipe for clogging. • Check for failure in indoor P.C. board.
P11	—	—	I/F	Outdoor heat exchanger freeze trouble	All stop	• Outdoor heat exchanger remaining frost detection has occurred eight times or more due to abnormal frost formation in heating operation.	• Check shortage of refrigerant. • Check connection of TE1, TE2 and TE3 sensors. • Check resistance characteristics of TE1, TE2, and TE3 sensors. • Check disconnection of TS1 sensor. • Check resistance characteristics of TS1 sensor. • Check outdoor I/F P.C. board malfunction. • Check operation of 4 way valve. • Check operation of outdoor PMV (1, 2, 3). • Check short circuit from outlet air to inlet air.
P12	—	—	Indoor unit	Indoor fan motor trouble	Stop of corresponding unit	• Motor speed measurements continuously deviate from target value. • Overcurrent protection is activated.	• Check connection of fan connector and wiring. • Check for failure in fan motor. • Check for failure in indoor P.C. board. • Check impact of outside air treatment (OA).
P13	P13	—	I/F	Outdoor liquid backflow detection trouble	All stop	<During cooling operation> When system is in cooling operation, high pressure is detected in the unit that has been turned off. <During heating operation> When system is in heating operation, low pressure is detected to be high in unit that has been turned off.	• Check full-close operation of outdoor PMV (1, 2, 3, 4). • Check for failure in Pd or Ps sensor. • Check failure in outdoor P.C. board (I/F). • Check capillary of oil separator oil return circuit for clogging. • Check for leakage of check valve in discharge pipe
P15	P15	01: TS condition	I/F	Gas leak detection (TS1 condition)	All stop	Protective shutdown due to sustained suction temperature at or above judgment criterion for at least 10 minutes is repeated four times or more. <TS trouble judgment criterion> In cooling operation: 60 ˚C In heating operation: 40 ˚C	• Check for insufficiency in refrigerant quantity. • Check outdoor service valves (gas side, liquid side) to confirm full opening. • Check PMVs (PMV1, 2, 3, 4) for clogging. • Check resistance characteristics of TS1 sensor. • Check for failure in 4-way valve. • Check SV4 circuit for leakage
		02: TD condition	I/F	Gas leak detection (TD condition)	All stop	Protective shutdown due to sustained discharge temperature (TD1 or TD2) at or above 108 ˚C for at least 10 minutes is repeated four times or more.	• Check for insufficiency in refrigerant quantity. • Check PMVs (PMV 1, 2, 3, 4) for clogging. • Check resistance characteristics of TD1 and TD2 sensors. • Check indoor filter for clogging. • Check piping for clogging. • Check SV4 circuit (for leakage or coil installation trouble).

Check code			Location of detection	Description	System status	Check code detection condition(s)	Check items (locations)
Main remote controller	Outdoor 7-segment display						
	Check code	Sub-code					
P17	P17	—	I/F	Discharge temperature TD2 trouble	All stop	Discharge temperature (TD2) exceeds 115 ˚C.	• Check outdoor service valves (gas side, liquid side) to confirm full opening. • Check outdoor PMVs (PMV1, 2, 3, 4) for clogging. • Check resistance characteristics of TD2 sensor. • Check for failure in 4-way valve. • Check SV4 circuit for leakage. • Check SV4 circuit (for wiring or installation trouble involving SV41 and SV42).
P19	P19	Detected outdoor unit No.	I/F	4-way valve reversing trouble	All stop	Abnormal refrigerating cycle data is collected during heating operation.	• Check for failure in main body of 4-way valve. • Check for coil failure in 4-way valve and loose connection of its connector. • Check resistance characteristics of TS1 and TE1,TE2 sensors. • Check output voltage characteristics of Pd and Ps pressure sensors. • Check for wiring trouble involving TE1 and TL1 sensors.
P20	P20	—	I/F	Activation of high-pressure protection	All stop	<During cooling operation> Pd sensor detects pressure equal to or greater than 3.85 MPa. <During heating operation> Pd sensor detects pressure equal to or greater than 3.6 MPa.	• Check for failure in Pd pressure sensor. • Check service valves (gas side, liquid side) to confirm full opening. • Check for failure in outdoor fan. • Check for failure in outdoor fan motor. • Check outdoor PMV (PMV1, 2, 3, 4) for clogging. • Check indoor/outdoor heat exchangers for clogging. • Check for short-circuiting of outdoor suction/ discharge air flows. • Check for failure in outdoor P.C. board (I/F). • Check for failure in indoor fan system (possible cause of air flow reduction). • Check opening status of indoor PMV. • Check indoor-outdoor communication line for wiring trouble. • Check for troble operation of check valve in discharge pipe convergent section. • Check gas balancing SV4 valve circuit. • Check for refrigerant overcharging.

Check code			Location of detection	Description	System status	Check code detection condition(s)	Check items (locations)
Main remote controller	Outdoor 7-segment display						
	Check code	Sub-code					
P22	P22	1∗: Fan P.C. board 1 2∗: Fan P.C. board 2	Fan INV. P.C. board	Outdoor fan P.C. board trouble	All stop	Protected operation of Fan inverter P.C. board	• Check fan motor. • Check for failure in fan P.C. board. • Check connection of fan motor connector. • Check power voltage of the main power supply.
P26	P26	1∗: Compressor 1 side 2∗: Compressor 2 side	Compressor P.C. board	IPM, Compressor shortcircuit protection trouble	All stop	Overcurrent is momentarily detected during startup of compressor.	• Check connector connection and wiring on compressor P.C. board. • Check for failure in compressor (layer shortcircuit). • Check for failure in outdoor P.C. board (Compressor).
P29	P29	1∗: Compressor 1 side 2∗: Compressor 2 side	Compressor P.C. board	Compressor position detection circuit trouble	All stop	Position detection is not going on normally.	• Check wiring and connector connection. • Check for compressor layer short-circuit. • Check for failure in compressor P.C. board.
P31	—	—	Indoor unit	Other indoor trouble (group follower unit trouble)	Stop of corresponding unit	There is trouble in other indoor unit in group, resulting in detection of E07/L07/L03/L08.	• Check indoor P.C. board.

Check codes Detected by Central Control Device

Check code			Location of detection	Description	System status	Check code detection condition(s)	Check items (locations)
Main remote controller	Outdoor 7-segment display						
	Check code	Sub-code					
C05	—		Central control device	Central control device transmission trouble	Continued operation	Central control device is unable to transmit signal.	• Check for failure in central control device. • Check for failure in central control communication line. • Check termination resistance setting.
C06	—		Central control device	Central control device reception trouble	Continued operation	Central control device is unable to receive signal.	• Check for failure in central control device. • Check for failure in central control communication line. • Check terminator resistor setting. • Check power supply for devices at other end of central control communication line. • Check failure in P.C. boards of devices at other end of central control communication line.
C12	—		General-purpose device I/F	Batch alarm for general-purpose device control interface	Continued operation	Trouble signal is input to control interface for general-purpose devices.	• Check trouble input.
P30	Differs according to nature of alarm-causing trouble		Central control device	Group control follower unit trouble	Continued operation	Trouble occurs in follower unit under group control. ([P30] is displayed on central control remote controller.)	• Check check code of unit that has generated alarm.
	(L20 displayed.)			Duplicated central control address	Continued operation	There is duplication in central control addresses.	• Check address settings.

Check code	Check code name	Cause
[P12]	Indoor fan motor trouble	1. Installation environment trouble 2. Electric parts trouble 3. Wiring error of fan motor connector 4. Fan motor trouble 5. Indoor P.C. board trouble

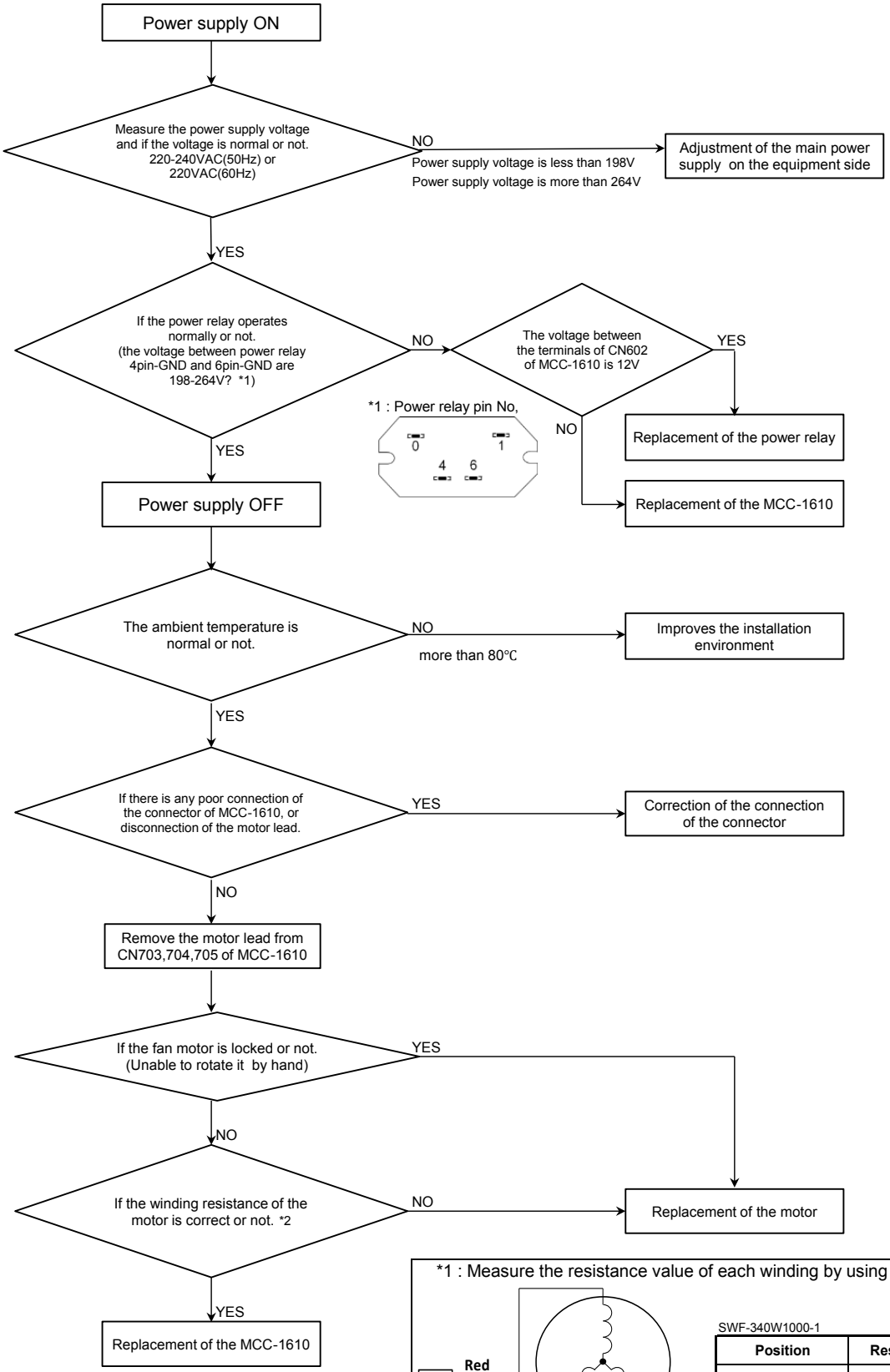

*1 : Measure the resistance value of each winding by using the tester

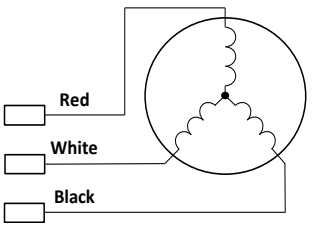

Fan motor inside wiring diagram

SWF-340W1000-1

Position	Resistance value
Red - White	2.6 ± 0.3 Ω
White - Black	2.6 ± 0.3 Ω
Black - Red	2.6 ± 0.3 Ω

at 20°C

9-5. Sensor characteristics

Indoor unit

▼Temperature sensor characteristics

Indoor TA sensor

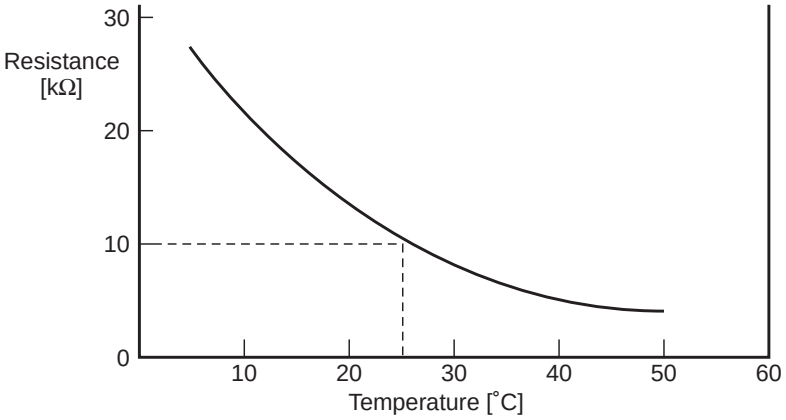

Temperature [˚C]	Resistance [kΩ]
0	33.9
5	26.1
10	20.3
15	15.9
20	12.6
25	10.0
30	8.0
35	6.4
40	5.2
45	4.2
50	3.5
55	2.6
60	2.4

Indoor TC1 sensor

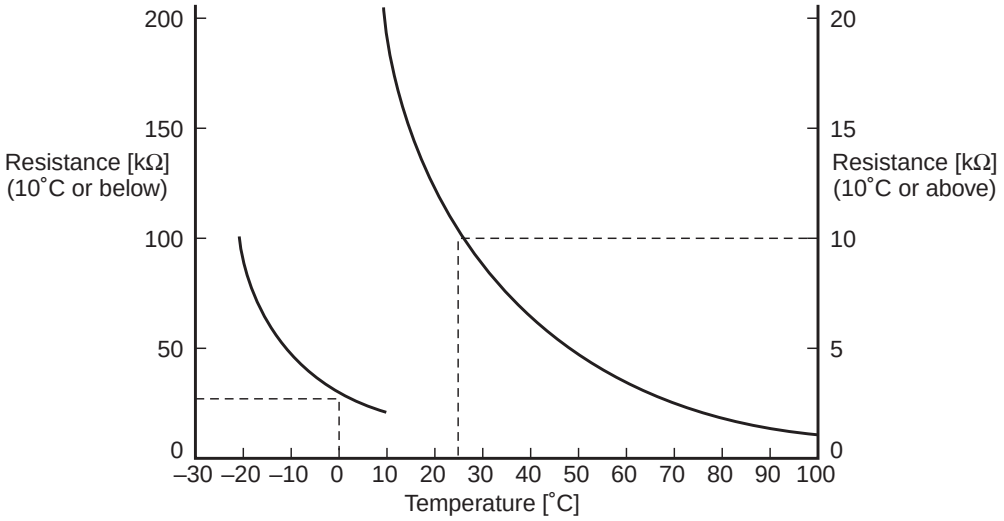

Temperature [˚C]	Resistance [kΩ]
–20	99.9
–15	74.1
–10	55.6
–5	42.2
0	32.8
5	25.4
10	19.8
15	15.6
20	12.4
25	10.0
30	8.1
35	6.5
40	5.3
45	4.4
50	3.6
55	3.0
60	2.5
65	2.1
70	1.8
75	1.5
80	1.3
85	1.1
90	1.0
95	0.8
100	0.7

Indoor TC2 and TCJ sensors

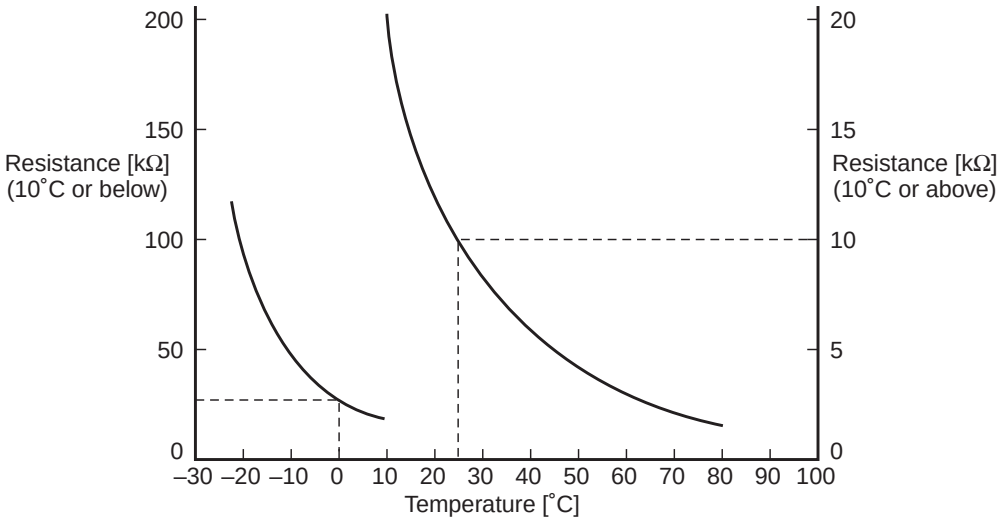

Temperature [˚C]	Resistance [kΩ]
–20	115.2
–15	84.2
–10	62.3
–5	46.6
0	35.2
5	26.9
10	20.7
15	16.1
20	12.6
25	10.0
30	8.0
35	6.4
40	5.2
45	4.2
50	3.5
55	2.8
60	2.4
65	2.0
70	1.6
75	1.4
80	1.2

10. Replacement of P.C. Board for Indoor Unit Servicing

<Models>

MMD-UP0721HP-*, MMD-UP0921HP-*

<Note : when replacing the P.C. board for indoor unit servicing>

The nonvolatile memory (hereafter called EEPROM, IC503) on the indoor unit P.C. board before replacement includes the model specific type information and capacity codes as the factory-set value and the important setting data which have been automatically or manually set when the indoor unit is installed, such as system/indoor/group addresses, high ceiling select setting, etc. When replacing the P.C. board for indoor unit servicing, follow the procedures below.
After replacement completes, confirm whether the settings are correct by checking the indoor unit No.,Group header unit/ follower unit settings and perform the cooling cycle confirmation through the trial operation.

<Replacement procedures>

■ Case 1

Before replacement, the indoor unit can be turned on and the setting data can be read out by wired remote control operation.

EEPROM data read out [1] (Refer to page 1)

⇩

Replacement of P.C. board for Indoor unit servicing and power on [2] (Refer to page 2.)

⇩

Writing the read out EEPROM data [3] (Refer to page 2.)

⇩

Power reset(for all indoor units connected to the remote control when the group operation control is performed.)

■ Case 2

The EEPROM before replacement is defective and the setting data cannot be read out.

Writing the setting data to EEPROM, such as high ceiling installation setting and optional connection setting, etc., based on the customer information. [3] (Refer to page 2.)

⇩

Power reset (for all indoor units connected to the remote control when the group operation control is performed.)

[1] Setting data read out from EEPROM

The setting data modified on the site, other than factory-set value, stored in the EEPROM shall be read out.

Step 1 Press SET, CL and TEST button on the remote control simultaneously for more than 4 seconds.
When the group operation control is performed, the unit No. displayed for the first time is the header unit No.
At this time, the CODE No.(DN)shows 10 .Also,the fan of the indoor unit selected starts its operation and the swing operation also starts if it has the louvers.

Step 2 Every time when the UNIT LOUVER button is pressed, the indoor unit No. under the group control is displayed in order.
Specify the indoor unit No.to be replaced.

1. Change the CODE No.(DN) to 10 - 01 by pressing ▼ / ▲ buttons for the temperature setting.
   (this is the setting for the filter sign lighting time.)
   At this time, be sure to write down the setting data displayed.
2. Change the CODE No.(DN) by pressing ▼ / ▲ buttons for the temperature setting.
   Similarly, be sure to write down the setting data displayed.
3. Repeat the step 2-2 to set the other settings in the same way and write down the setting data as shown in the table 1(example)on page 4.

* The CODE No.(DN)are ranged from 01 to 41b .The CODE No.(DN) may skip.

Step 3 After writing down all setting data, press TEST button to return to the normal stop status.
(It takes approx. 1 min until the remote control operation is available again.)

CODE No.required at least

DN	Contents
10	Type
11	Indoor unit capacity
12	System address
13	Indoor unit address
14	Group address
FC	Communication protocol
1FC	Indoor Unit terminating resistance

1. The CODE No. for the Indoor unit type and Indoor unit capacity are required to set the rotation number setting of the fan.
2. If the system/indoor/group addresses are different from those before replacement, the auto-address setting mode starts and the manual resetting may be required again.
(when the multiple units group operation including twin system.)

[2] P.C. Board for indoor unit servicing replacement procedures

Step 1 Replace the P.C. board to the P.C. board for indoor unit servicing.
At this time, perform the same setting of the jumper wire(J01, J08, J09)setting(cut),switch SW501, (short-circuit) connector CN34 as the setting of the P.C. board before replacement.

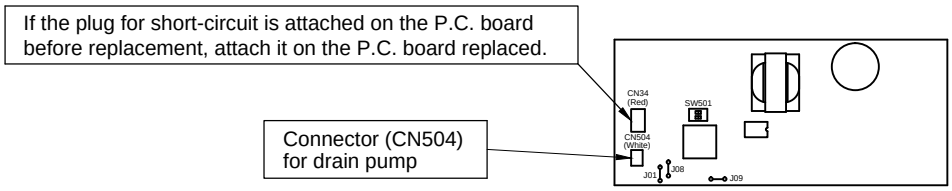

Step 2 It is necessary to set Indoor unit to be exchanged : Remote controller = 1:1
Based upon the system configuration, turn on power of the indoor unit with one of the following items.
1) Single (Individual) operation
Turn on power of the indoor units and proceed to [3].
2) Group operation
A) In case that power of the exchanged indoor unit only can be turned on
Turn on power of the exchanged indoor unit only and proceed to [3].
B) In case that power of the indoor units cannot be turned on individually (Case 1)
a) Remove temporarily the group wire connected to the terminal blocks A and B of the exchanged indoor unit.
b) After connecting the remote controller wire only to the removed terminal block, turn on power of the indoor units and proceed to [3].
When the above methods cannot be used, follwer to the two cases below.
C) In case that power of the indoor units cannot be turned in individually (Case 2)
a) Remove all CN41 connectors of the indoor units in the same group except those of the exchanged indoor unit.
b) Turn on power of the indoor units and proceed to [3].
After [3] operation has finished, be sure to return the temporarily removed group wire or CN41 connector to the original connection.

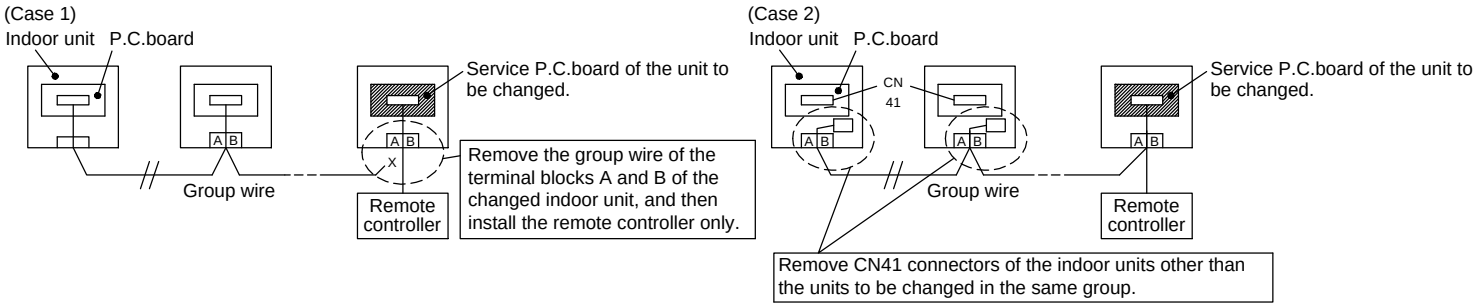

[3] Writing the setting data to EEPROM

The settings stored in the EEPROM of the P.C. board for indoor unit servicing are the factory-set values.

Step 1 Press SET, CL and TEST buttons on the remote control simultaneously for more than 4 seconds.
* In the group control operation, the unit No. displayed for the first time is the header unit No.
At this time, the CODE No. (DN)shows 10 . Also, the fan of the indoor unit selected starts its operation and the swing operation starts if it has the louvers.
(The unit No. ALL is displayed if the auto-address setting mode is interrupted in [2] step 2 a) 2. on pervious page.)

Step 2 Every time when the UNIT LOUVER button is pressed, the indoor unit Nos. in the group control operation are displayed in order.
(The settings stored in the EEPROM of the P.C. board for indoor unit servicing are the factory-set values.)
Specify the indoor unit No.with its P.C. board replaced to the P.C. board for indoor unit servicing.
(You cannot perform this operation if ALL is displayed.)

Step 3 Select the CODE No. (DN) can be selected by pressing the ▼/ ▲ button for the temperature setting.

- Set the indoor unit type and capacity.

The factory-set values shall be written to the EEPROM by changing the type and capacity.

<Fig. 1 RBC-AMT32E>

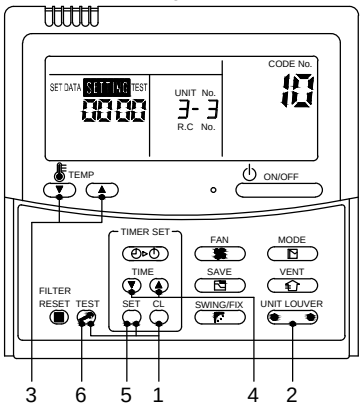

1. Set the CODE No. (DN) to 10 . (without change)
2. Select the type by pressing ▼/ ▲ buttons for the timer setting.
   (For example, High Static Duct Pressure is set to “0006”.
   Refer to table 2 on page 4.)
3. Press SET button. (The operation completes if the setting data is displayed.)
4. Change the CODE No. (DN) to 11 by pressing ▼/ ▲ buttons for the temperature setting.
5. Select the capacity by pressing ▼/ ▲ buttons for the timer setting.
   (For example, 072 Type is set to “0021”. Refer to table 2 on page 4.)
6. Press SET button. (The setting completes if the setting data are displayed.)
7. Press the TEST button to return to the normal stop status.
   (It takes approx. 1 min until the remote control operation is available again.)

Write the on-site setting data to the EEPROM, such as address setting, etc. Perform the steps 1 and 2 above again.
Change the CODE No. (DN) to 01 by pressing ▼/ ▲ buttons for the temperature setting. (this is the setting for the filter sign lighting time.)
Check the setting data displayed at this time with the setting data put down in [1] (on page 1).

1. If the setting data is different, modify the setting data by pressing ▼/ ▲ buttons for the timer setting to the data put down in [1].
   The operation completes if the setting data is displayed.
2. If the data is the same, proceed to next step.

Change the CODE No. (DN) by pressing ▼/ ▲ buttons for the temperature setting.
As described above, check the setting data and modify to the data put down in [1].
Repeat the steps 6 and 7.
After the setting completes, press TEST button to return to the normal stop status.
(It takes approx. 1 min until the remote control operation is available again.)

* The CODE No. (DN) are ranged from 01 to 4b .The CODE No. (DN) is not limited to be serial No. Even after modifying the data wrongly and pressing SET button, it is possible to return to the data before modification by pressing CL button if the CODE No. (DN) is not changed.

<Fig.2 EEPROM layout diagram>

The EEPROM (IC503) is attached to the IC socket. When detaching the EEPROM, use a tweezers, etc. Be sure to attach the EEPROM by fitting its direction as shown in the figure.

* Do not bend the IC lead when replacing.

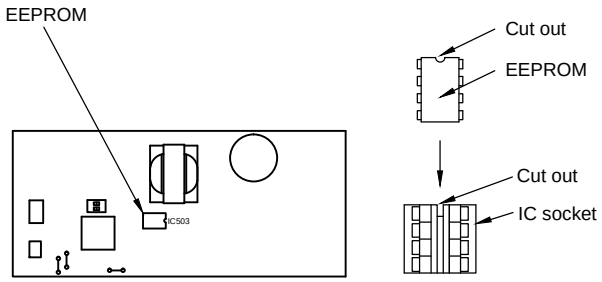

<Fig.2>

Table 1.Setting data(CODE No. table(example))

DN	Item	Setting data	Factory-set value
01	Filter display delay timer		0002 : 2500H
02	Dirty state of filter		0000 : Standard
03	Central control address		00Un/0099 : Unfixed
04	Specific indoor unit priority		0000 : No priority
06	Heating suction temperature shift		0002 : +2°C
0D	Automatic mode		0001 : No automatic
0F	Cooling only		0000 : Heat pump
10	Type		Depending on model type
11	Indoor unit capacity		According to capacity type
12	Line address		00Un/0099 : Unfixed
13	Indoor unit address		00Un/0099 : Unfixed
14	Group address		00Un/0099 : Unfixed
19	Flap type (Wind direction adjustment)		Depending on Type
1E	Temperature range of cooling/heating automatic SW control point		0003 : 3 deg (Ts±1.5)
28	Automatic restart of power failure		0000 : None 0001 : Restart (-T model only)
2A	Selection of option / Trouble input (TCB-PCUC2E: CN3)		0002 : None
2B	Themo output SW		0000 : Thermo ON
2E	HA terminal (CN61) select		0000 : Usual (HA terminal)
31	Ventilating fan control		0000 : Unavailable
32	Sensor SW		0000 : Body sensor
33	Temperature unit select		0000 : Centigrade (°C)
5D	External static pressure		0000 : Default setting
60	Timer setting (wired remote controller)		0000 : Available
7A	Change unit 0.5°C or 1.0°C on remote		0000 : 0.5°C
D0	Remote controller operation save function		0001 : Enable
E0	Region	0003 : China model	0000 : Japan model
F6	Presence of Application control kit (TCB-PCUC2E)		0000 : None
FC	Communication protocol		0000 : TCC-LINK
FE	FS unit adress		00Un/0099 : Unfixed
1Fb	Remote controller operation		0000 : Operation possible
1FC	Indoor Unit terminating resistance		0000 : OFF

Table 2. Type : CODE No.10

Setting data	Type	Type name abb.
0001 *1	4-way Air Discharge Cassette Type	MMU-UP****H-*
0006	High Static Duct Pressure	MMD-UP****HP-*

Table 3. Indoor unit capacity : CODE No.11

Setup data	Model
0000 *1	Invalid
0021	072 type
0023	096 type

*1 EEPROM initial value on the P.C. board for indoor unit servicing.

*2 ⚠ CAUTION

< Model name MMD-UP****HP-* >

For the above model. Set the CODE no. to

"28" the setting data "0000" (initial) to "0001" < -T model only >

Fan IPDU P.C. Board (MCC-1610)

Replacement steps:

[Remove PCB]

(1) Turn off the power supply of the indoor unit and allow at least one minute for the capacitor to discharge. Confirm that the light of the LED (D640) fades away.

(2) Remove all the connectors which are connected to the FAN IPDU. (Remove the connectors by pulling the connector body. Do not pull the wire, because there are some rocks in connector).

(3) Remove all the five screws (a) which secures the FAN IPDU to the Heat sink.(These screws are to be re-used after procedure.)

(4) Remove the Fan IPDU from four PCB spacer (b).

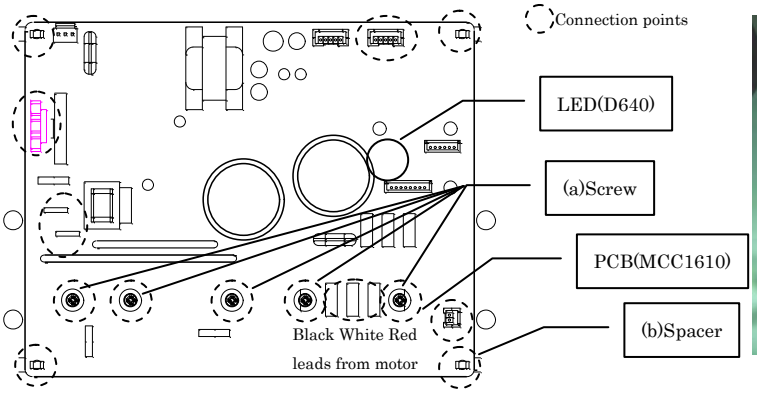

Figure1 PCB outline

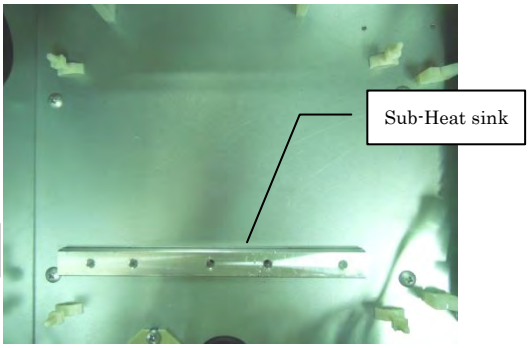

Figure2 After removing PCB

[Set PCB]

(5) Confirm that no dirt or damage is on the sub heat sink. **<u>And don't forget to set sub heat sink.</u>** As it can reduce the heat transfer efficiency, and cause a breakdown.

(6) Screw the FAN IPDU to the heat sink using the five screws that were removed in step (3). If the screws are loose, the effected component will generate heat, and cause in to breakdown. Do not use an electric driver or an air driver, as it can cause component damage. The torque of 5 screws (IC701, DB509, DB510 and Q590) is "0.55Nm".

(7) Re-connect the connectors. Be sure that all the connectors are connected correctly and securely inserted.

(8)Install the cover, then turn on the supply. Check the operation.

10-2. N/F P.C. Board (MCC-1551) Replacement Procedure

(1) Turn off the power supply of the indoor unit

(2) Remove all the connectors and remove earth lead from metals. (Remove the connectors by pulling the connector body. Do not pull the wire, because there are some rocks in connector).

(3) Remove the Fan IPDU from four PCB spacer (a).

(4) After changing PCB, re-connect the connectors. Be sure that all the connectors are connected correctly and securely inserted. And Screw to earth lead.

(5) Install the cover, then turn on the supply. Check the operation.

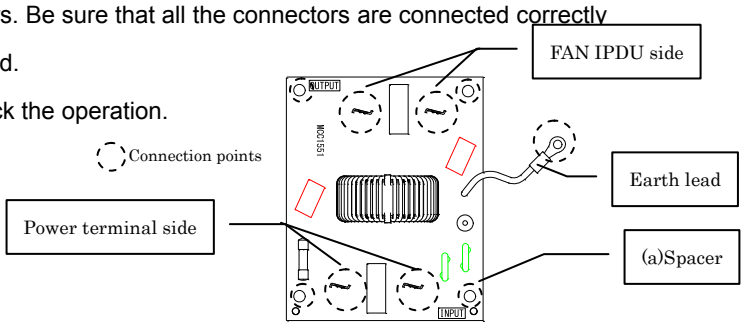

11. DETACHMENTS

⚠ WARNING

Be sure to stop operation of the air conditioner before work and then turn off switch of the breaker.

⚠ CAUTION

Be sure to put on gloves during working time; otherwise an injury will be caused by a part, etc.

No.	Part name	Procedure	Remarks
①	Electrical parts box cover	**1. Detachment** 1) Remove the fixing screws A fixing the electrical parts box cover. Loosen the fixing screws B. 2) Slide the electrical parts box cover to the arrow direction and remove the panel. **2. Attachment** 1) Hang the electrical parts box cover to the screws B and tighten the screws. 2) Attach the removed screws A to the original positions.	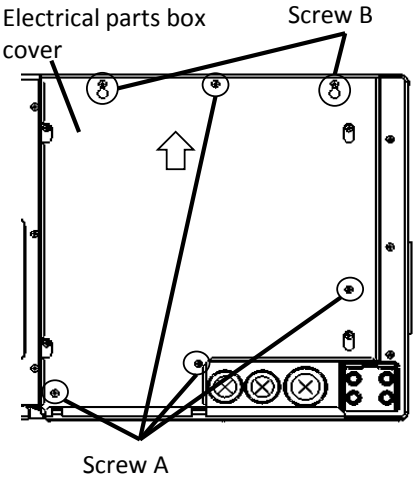 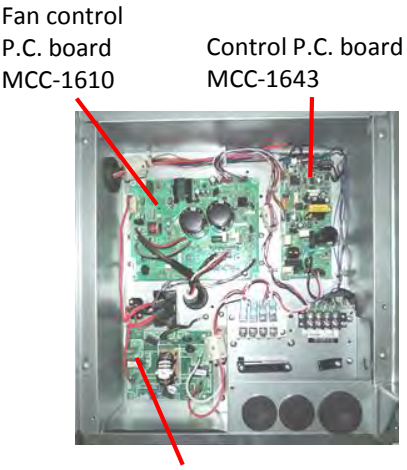
②	Control P.C. board MCC-1643	**1. Detachment** 1) Perform 1 of ①. (In 1 of ①, the removal of the control P.C board is possible even if you do not finish ①). 2) Unlock the locking card spacers (4 positions) in the electrical parts box to remove the control P.C. board. **NOTE** First unlock the housing and then remove the connectors. CN41 : A,B terminal block (2P, Blue) CN40 : U1,U2 terminal block (2P, Blue) CN67 : Power supply terminal block (5P: Black) CN100 : TC1 sensor (3P: Brown) CN101 : TC2 sensor (2P: Black) CN102 : TCJ sensor (2P, Red) CN104 : Room temperature (2P, Yellow) CN82 : PMV motor(6P,Blue) CN521 : UART(5P,Red) CN22 : Ground (Faston terminal) CN34 : Float switch (3P, Red) *Option	

No.	Part name	Procedure	Remarks
②	Control P.C. board MCC-1643	**2. Attachment** 1) Mount the control P.C. board in the electrical parts box as before. 2) Attach the electrical parts box as before. 3) Be sure to wire in the electric parts box as before. **NOTE 1** Check if there is no missing or contact failure of the connectors. **NOTE 2** Be sure to wire as before. 4) Attach the electrical parts box cover as before.	
③	Fan control P.C. board MCC-1610	**1. Detachment** 1) Perform 1 of ①. 2) Unlock the card edge spacers (4 positions) in the electrical parts box to remove the fan control P.C. board. 3) Remove the fixing screws A. **NOTE** First unlock the housing and then remove the connectors. CN504 : Uart (5P, Blue) CN500 : Power supply terminal block (5P: Black) CN510 : Reactor (Faston terminal) CN511 : Reactor (Faston terminal) CN602 : Relay (2P, Black) CN703 : Fan motor (Black wire) W CN704 : Fan motor (White wire) V CN705 : Fan motor (Red wire) U **2. Attachment** 1) Mount the fan control P.C. board in the electrical parts box as before. 2) Attach the electrical parts box as before. 3) Be sure to wire in the electrical parts box as before. **NOTE 1** Check if there is no missing or contact failure of the connectors. **NOTE 2** Be sure to wire as before. 4) Attach the electrical parts box cover as before.	Power supply CN500 Uart CN504 Reactor CN510,511 Fan motor CN703,704,705 Relay CN602 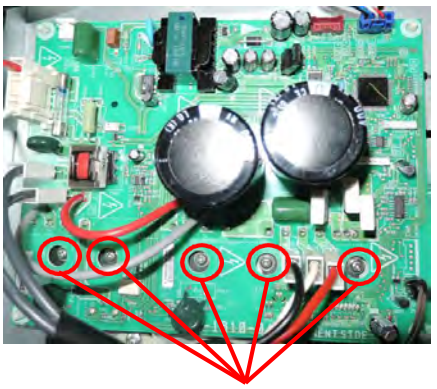 Fixing screw A
④	Noise filter P.C. board MCC-1551	**1. Detachment** 1) Perform 1 of ①. 2) Unlock the card edge spacers (4 positions) in the electrical parts box to remove the noise filter P.C. board. **NOTE** First unlock the housing and then remove the connectors. CN01 : Power supply (Red wire) CN02 : Power supply (White wire) CN03 : Power supply (Red wire) CN04 : Power supply (White wire)	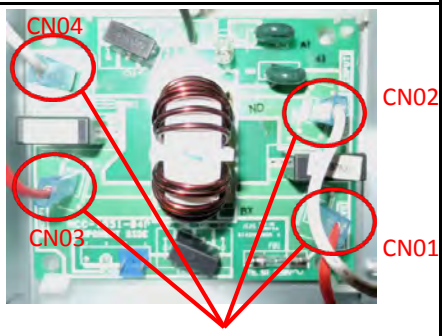 Power supply

No.	Part name	Procedure	Remarks
④	Noise filter P.C. board MCC-1551	**2. Attachment** 1) Mount the noise filter P.C. board in the electrical parts box as before. 2) Attach the electrical parts box as before. 3) Be sure to wire in the electric parts box as before. **NOTE 1** Check if there is no missing or contact failure of the connectors. **NOTE 2** Be sure to wire as before. 4) Attach the electrical parts box cover as before.	
⑤	PMV motor	**1. Detachment** 1) Perform 1 of ① to open the electrical parts box cover. 2) Loosen the fixing screws of the inspection cover and open the inspection cover. 3) Remove the connector of the PMV motor. CN82 : PMV motor (6P,Blue) 4) As shown in the right figure, using the two spanners, open the inspection cover of the side face and then remove the PMV motor. **2. Attachment** 1) Attach the PMV motor as before. 2) Connect the connector of the PMV motor as before and close the electrical parts box cover. Be sure to wire in the electrical parts box as before. 3) Fix the inspection cover with the fixing screws (4 positions).	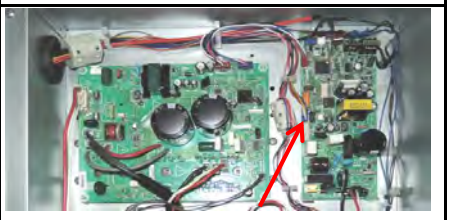 Relay connector of PMV motor Screw 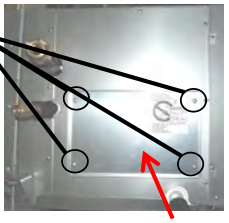 Inspection cover PMV motor
⑥	Suction panel	**1. Detachment** 1) Remove the fixing screws A fixing the bottom panel (fan side). Loosen the fixing screws B. 2) Slide the bottom plate of the (fan side) to the arrow direction and remove the panel. **2. Attachment** 1) Hang the bottom plate (fan side) to the screws B. 2) Attach the removed screws A to the original positions.	Fixing screw A Bottom plate (fan side) 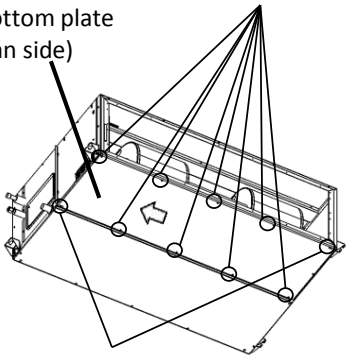 Fixing screw B

No.	Part name	Procedure	Remarks
⑦	Fan motor, Fan	**1. Detachment** 1) Perform 1 of ① to open the electrical parts box cover. 2) Perform 1 of ⑥. 3) Remove the connectors of the wires of the fan motor from the fan control P.C. board. CN703 : Fan motor (Black wire) CN704 : Fan motor (White wire) CN705 : Fan motor (Red wire) 4) Remove the fixing screws A (M8 x 20, 8 pcs) . and loosen the fixing screws B (M8 x 20, 2 pcs) . (The fan motor is in the temporary hanging state by the fixing plate.) 5) Remove the fan assembly. 6) Remove the fixing screws C (M8 x 20, 8 pcs) . 7) Loosen the hexagonal bolt of the fan and pull out the fan from the shaft. 8) Remove the fixing screws D (4 pcs) from the fan case and remove the nose plate and then take out the fan. 9) Remove the fixing screw of ferrite core and unscrew the earth. 10) Remove the fixing screws E(M8 x 20, 2 pcs) and remove the motor fixing plate. 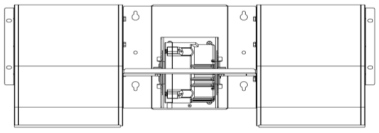 Fan assembly **⚠CAUTION** **Weight of the fan assembly is about 30kg. Handle it by 2 workers.** 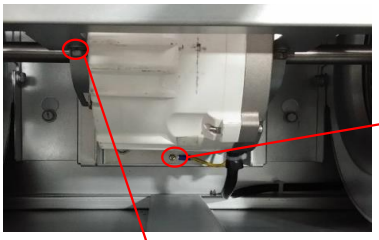 Earth screw 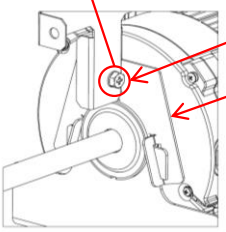 Screw E Motor fixing plate	Wires of the fan motor CN703 CN704 CN705 Screw A 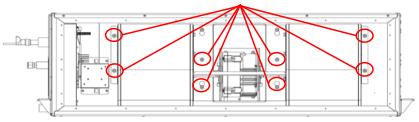 Screw B 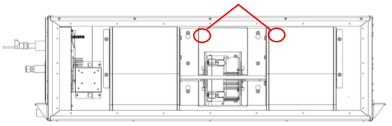 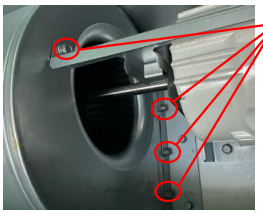 Screw C Fixing screw D 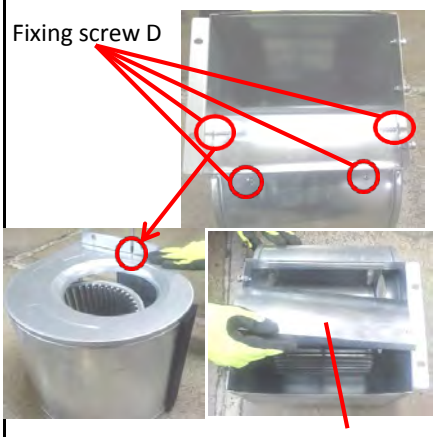 Nose plate Screw with hexagonal bolt

No.	Part name	Procedure	Remarks
⑦	Fan motor, Fan,	**2. Attachment** 1) Insert the fan to the shaft. 2) Put the fan in the fan case. Attach the nose plate to the original position on the fan case. 3) Screw the fan motor with the motor fixing plate. (M8 x 20, 2 pcs). 4) Attach the fan as before and check that if the fan rotate smoothly without touching the fan case. (M8 x 20, 6 pcs). 5) Adjust the hexagonal bolt to the flat portion and attach them. **NOTE** Fix the wiring of the motor on the opposite side of the refrigerant pipe. 6) After locating the fan at the center of the fan case, fix the fan with the hexagonal bolt. **NOTE** Be sure to use a torque wrench for fixing and tighten with 10.0N•m or more. 7) Connect the wires of the fan motor as before, and close and fix the electrical parts box cover. Be sure to wire in the electrical parts box as before. 8) Attach the suction panel to the original position.	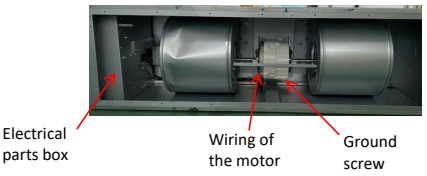 ⚠**CAUTION** Place the clamp filter in the box.
⑧	Drain pan	**1. Detachment** 1) Remove the drain hose or drain cap and then extract the drain water accumulated in the drain pan. **NOTE** When removing the drain hose or drain cap, be sure to take the drain water with a bucket, etc. 2) Remove the fixing screws A fixing the bottom plate . (10 positions) Loosen the fixing screws B. (3 positions) 3) Slide the bottom plate (drain side) to the arrow direction and then remove the panel. 4) Loosen the fixing screw of the drain pan supporter, and turn the drain pan supporter. 5) Lower the drain pan of the drain socket side, and remove it to the arrow direction slowly. ⚠ **CAUTION** When removing the drain pan, do not hold the drain socket. (Water leakage may occur.) **2. Attachment** 1) Put back the drain pan, and turn back the drain pan supporter and fix it with the screws.	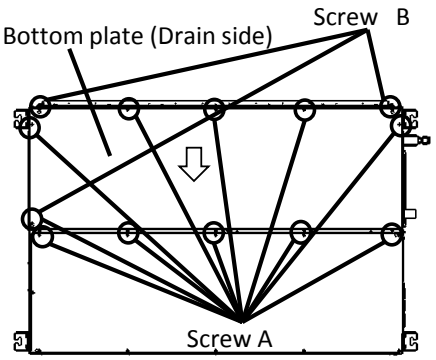 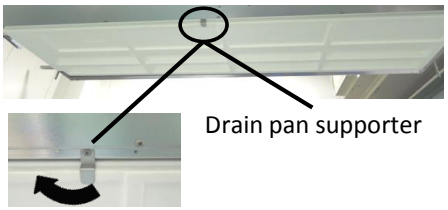 Drain pan pull-out direction. 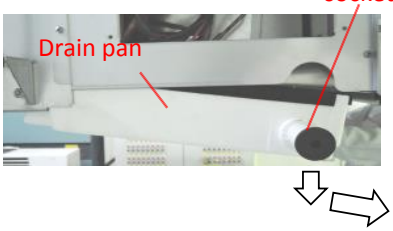

No.	Part name	Procedure	Remarks
⑨	Sensor TC1,TC2,TCJ	**1. Detachment** 1) Perform 1 of ① to open the electrical parts box cover. 2) Loosen the fixing screws of the inspection cover and open the inspection cover. 3) Remove the connectors of the wires of TC1 sensor , TC2 sensor and TCJ sensor from the control P.C. board. CN100 : TC1 sensor (3P: Brown) CN101 : TC2 sensor (2P: Black) CN102 : TCJ sensor (2P: Red) Control P.C.board MCC-1643 **2. Attachment** 1) Attach the TC1 sensor , TC2 sensor and TCJ sensor to the original position. 2) Wire the wires of TC1 sensor, TC2 sensor, and TCJ sensor as before. 3) Attach the left side panel as before.	Screw 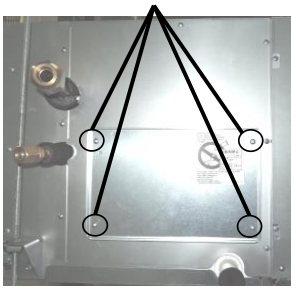 Inspection cover TC1 sensor TC2 sensor TCJ sensor 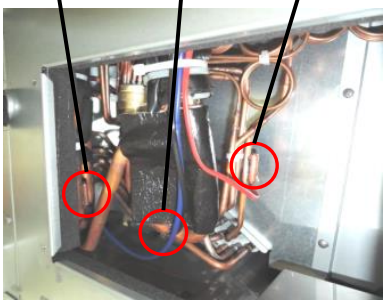
⑩	Heat exchanger	**1. Detachment** 1) Recover the refrigerant gas and then remove the refrigerant pipe of the indoor unit. 2) Perform 1 of ⑧. 3) Perform 1 of ⑨. 4) Remove the screws (M8 x 20, 5 pcs) and remove the right side panel. 5) Remove the screws (M8 x 20, 4 pcs) and remove the evaporator partition (back). 6) While holding the heat exchanger, remove the fixing screws (M8 x 20, 5 pcs) of the fixing end plate (UP) and evaporator partition (DOWN) and then take out the heat exchanger slowly.	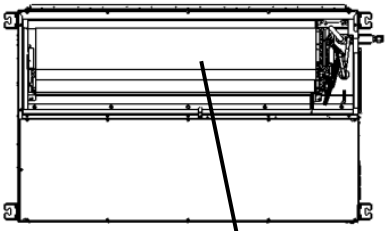 Heat exchanger Right side panel 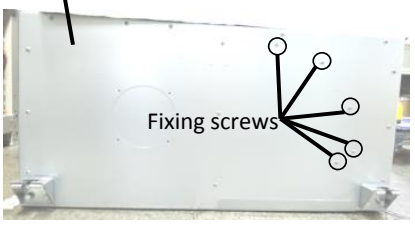 Fixing screws Evaporator partition (back) 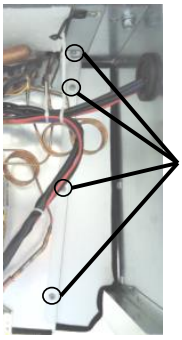 Fixing screws

No.	Part name	Procedure	Remarks
⑩	Heat exchanger	**2. Attachment** 1) Attach the heat exchanger to the original position, attach the fixing end plate (UP) and evaporator partition (Down) as before. 2) Attach the evaporator partition (back) as before. 3) Wire the wires of TC1 sensor, TC2 sensor, and TCJ sensor as before. 4) Attach the right side panel and left side panel as before. 5) Perform 2 of ⑧. 6) Attach the bottom base as before.	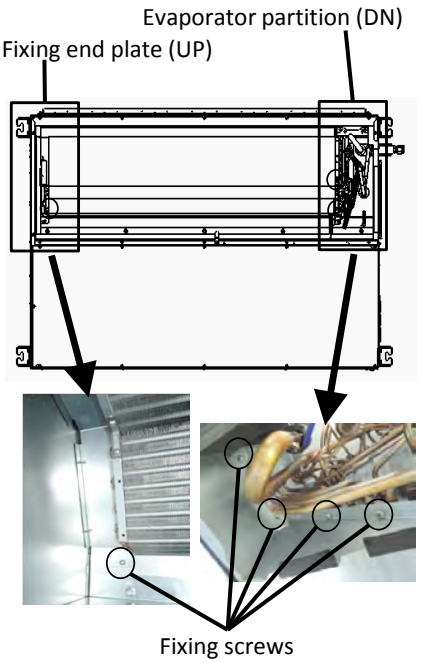
⑪	Sensor TA	**1. Detachment** 1) Perform 1 of ① and 1 of ⑥. 2) Remove the connector of the wires of TA sensor from the control P.C. board. 3) Pinch the lock of the TA sensor holder from the outside of the electrical parts box and push it into the inside of the electrical parts box. **2. Attachment** 1) Attach the TA sensor to the original position. 2) Wire the wires of TA sensor in the holder as before. 3) Attach the electronical parts box as before.	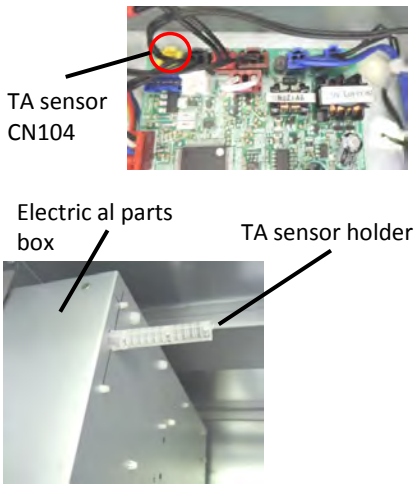
⑫	Reactor	**1. Detachment** 1) Perform 1 of ① and 1 of ⑥. 2) Remove the connector of the wires of the reactor from the fan control P.C. board. 3) Remove the fixing screws fixing the reactor cover. Slide the reactor cover to the arrow direction and remove. 3) Remove the fixing screws fixing the reactor. Remove the reactor from the reactor cover. **2. Attachment** 1) Attach the reactor to the reactor cover. 2) Attach the reactor cover as before. 3) Wire the wires of the reactor in the holder as before.	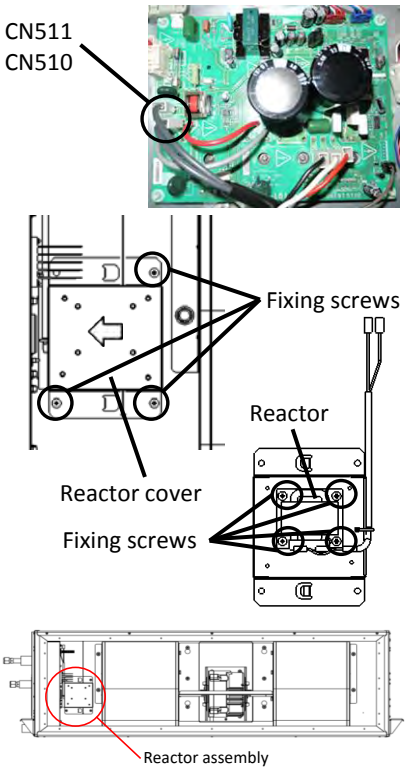

NOTE

After assembling, check if that there is no abnormal sound, vibration, or puncture.
Check the exchange point when you have a problem.

12. EXPLODED VIEWS AND PARTS LIST

12-1. Indoor Unit

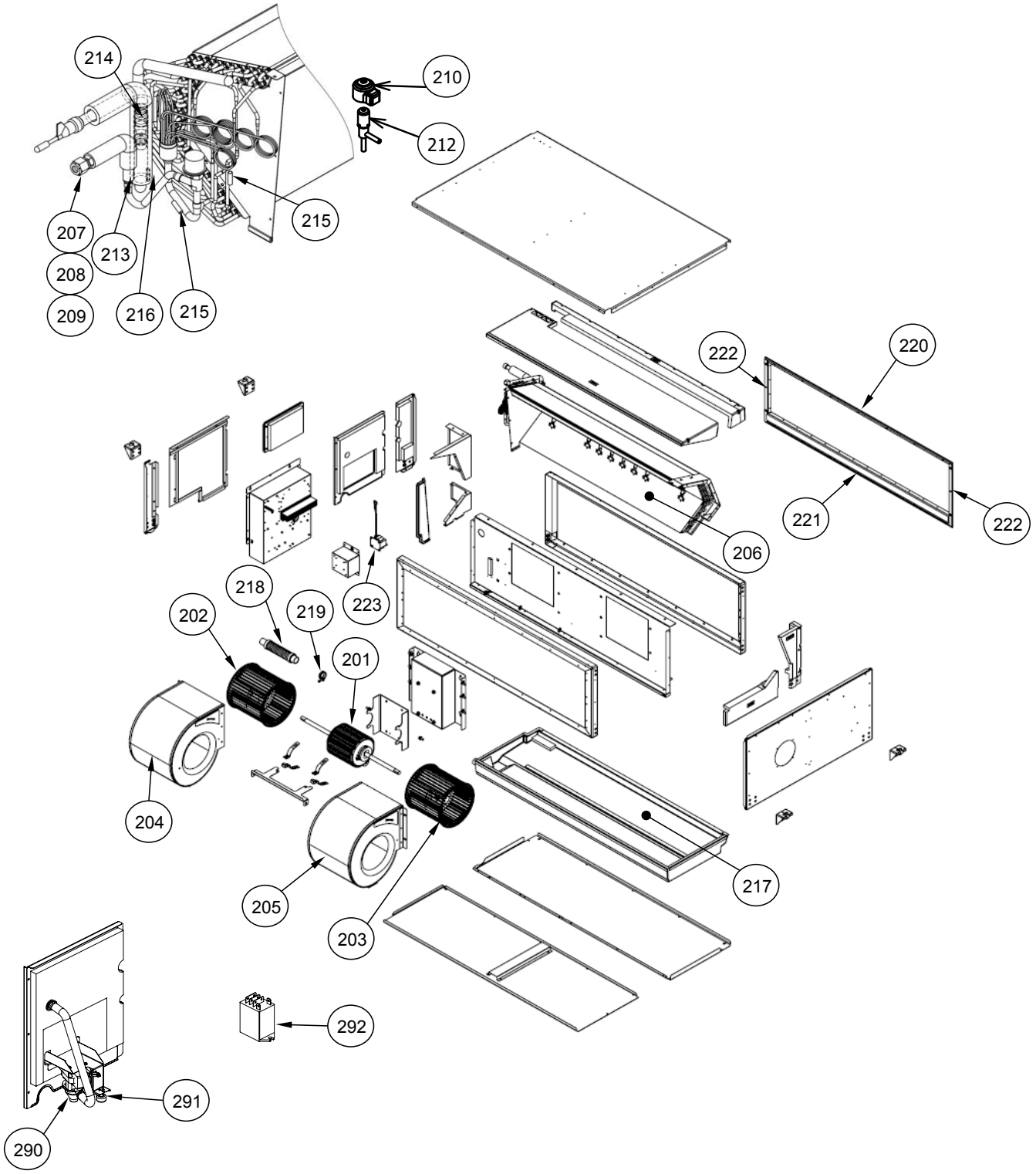

Location No.	Part No.	Description	Model name MMD-UP	
			0721HP*	0961HP*
201	43T21530	MOTOR, FAN	1	1
202	43T20346	FAN, MULTI BLADE, LEFT	1	1
203	43T20345	FAN, MULTI BLADE, RIGHT	1	1
204	43T22347	CASE, FAN, LEFT	1	1
205	43T22346	CASE, FAN, RIGHT	1	1
206	43T44809	REFRIGERATION CYCLE ASSY	1	1
207	43T47333	BONNET, 12.70 DIA	1	1
208	43T82344	SOCKET	1	1
209	43T97322	NUT, FLARE, 1/2 IN	1	1
210	43T46515	COIL, PMV	1	1
212	43T46514	BODY, PMV	1	1
213	43T47387	STRAINER	1	1
214	43T47407	STRAINER, GAS	1	1
215	43T19333	HOLDER, SENSOR	2	2
216	43T19321	FIX-P-SENSOR	1	1
217	43T72326	ASM-DR-GENE	1	1
218	43T70315	HOSE, DRAIN	1	1
219	43T83311	BAND, HOSE	1	1
220	43T39371	FLANGE, UPPER	1	1
221	43T39372	FLANGE, LOWER	1	1
222	43T39373	FLANGE, SIDE	2	2
223	43T58332	REACTOR	1	1
290	43T77302	PUMP DRAIN	1	1
291	43T51313	FLOT SWITCH	1	1
292	43T54325	RELAY	1	1

12-2. Drain pump kit (TCB-DP40DPE)

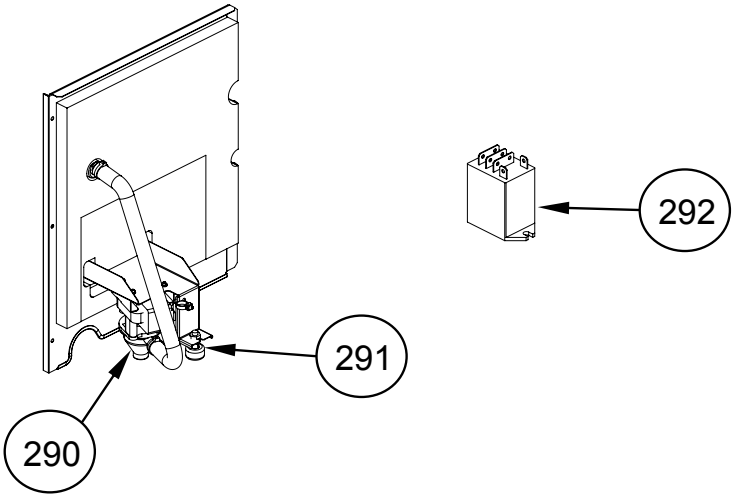

Location No.	Part No.	Description	Q'ty / Set
			TCB-DP40DPE
290	43T77302	PUMP DRAIN	1
291	43T51313	FLOT SWITCH	1
292	43T54325	RELAY	1

12-3. Electric Parts

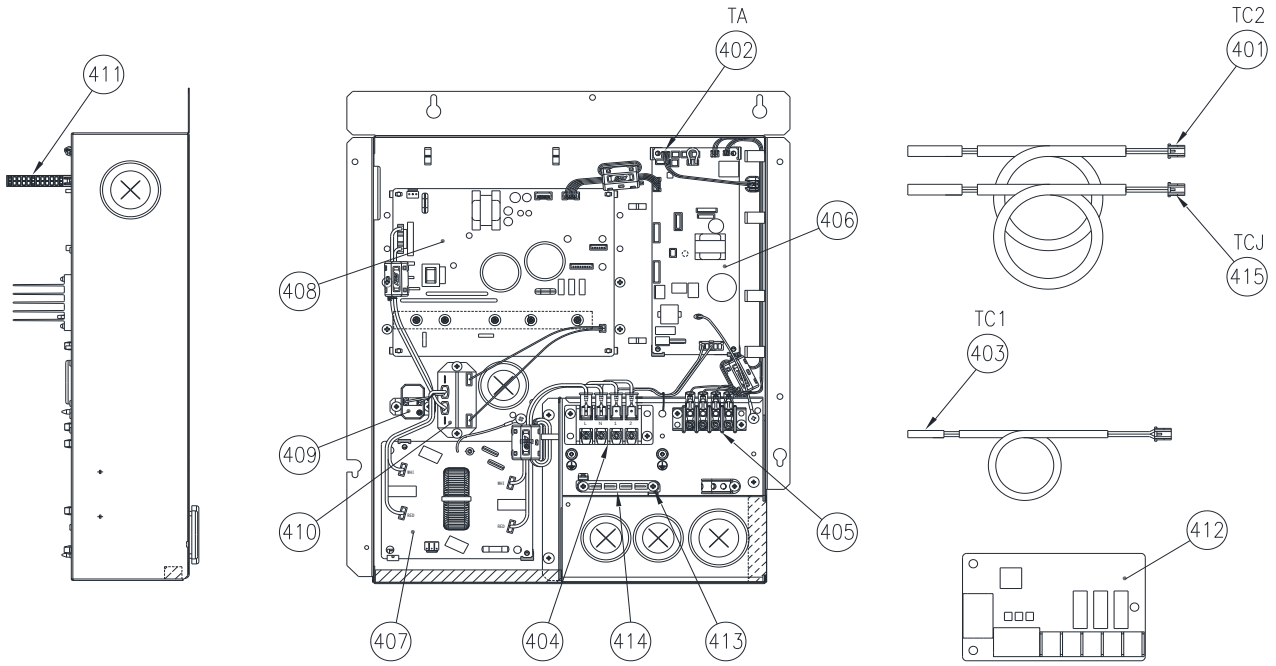

Location No.	Part No.	Description	Model name MMD-UP	
			0721HP*	0961HP*
401	43150440	TC-SENSOR	1	1
402	43T50476	SERVICE-SENSOR	1	1
403	43T50477	TC-SENSOR (TC1)	1	1
404	43T60458	SERV-TERMINAL	1	1
405	43T60362	TERMINAL	1	1
406	43TN9824	PC BOARD ASSY	1	1
407	43T6V670	PC BOARD ASSY	1	1
408	43TN9442	PC BOARD ASSY (MCC-1610)	1	1
409	43T50345	THERMISTOR,PTC	1	1
410	43T54324	POWER-RELAY	1	1
411	43T63356	HOLDER-TA	1	1
412	43459017	ASM-PCB(OP)	1	1
413	43T63348	CLAMP, DOWN	1	1
414	43T63349	CLAMP, UP	1	1
415	43150439	TC-SENSOR	1	1

WARNINGS ON REFRIGERANT LEAKAGE

Check of Concentration Limit

The room in which the air conditioner is to be installed requires a design that in the event of refrigerant gas leaking out, its concentration will not exceed a set limit.
The refrigerant R410A which is used in the air conditioner is safe, without the toxicity or combustibility of ammonia, and is not restricted by laws to be imposed which protect the ozone layer. However, since it contains more than air, it poses the risk of suffocation if its concentration should rise excessively. Suffocation from leakage of R410A is almost non-existent. With the recent increase in the number of high concentration buildings, however, the installation of multi air conditioner systems is on the increase because of the need for effective use of floor space, individual control, energy conservation by curtailing heat and carrying power etc.
Most importantly, the multi air conditioner system is able to replenish a large amount of refrigerant compared with conventional individual air conditioners. If a single unit of the multi conditioner system is to be installed in a small room, select a suitable model and installation procedure so that if the refrigerant accidentally leaks out, its concentration does not reach the limit (and in the event of an emergency, measures can be made before injury can occur).
In a room where the concentration may exceed the limit, create an opening with adjacent rooms, or install mechanical ventilation combined with a gas leak detection device.
The concentration is as given below.

$$\frac{\text{Total amount of refrigerant (kg)}}{\text{Min. volume of the indoor unit installed room (m}^3\text{)}} \leq \text{Concentration limit (kg/m}^3\text{)}$$

The concentration limit of R410A which is used in multi air conditioners is 0.3kg/m^3.

NOTE 1 :
If there are 2 or more refrigerating systems in a single refrigerating device, the amounts of refrigerant should be as charged in each independent device.

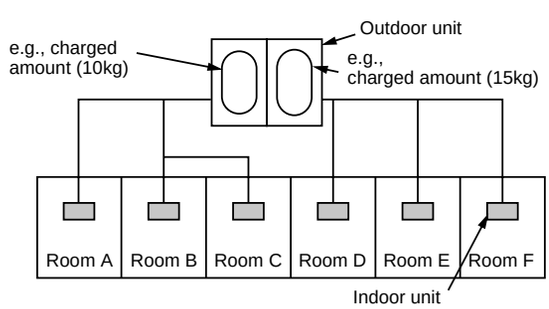

For the amount of charge in this example:
The possible amount of leaked refrigerant gas in rooms A, B and C is 10kg.
The possible amount of leaked refrigerant gas in rooms D, E and F is 15kg.

Important

NOTE 2 :
The standards for minimum room volume are as follows.
(1) No partition (shaded portion)

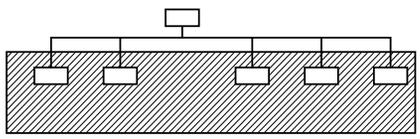

(2) When there is an effective opening with the adjacent room for ventilation of leaking refrigerant gas (opening without a door, or an opening 0.15% or larger than the respective floor spaces at the top or bottom of the door).

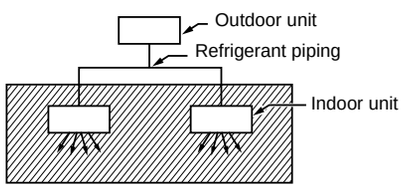

(3) If an indoor unit is installed in each partitioned room and the refrigerant piping is interconnected, the smallest room of course becomes the object. But when a mechanical ventilation is installed interlocked with a gas leakage detector in the smallest room where the density limit is exceeded, the volume of the next smallest room becomes the object.

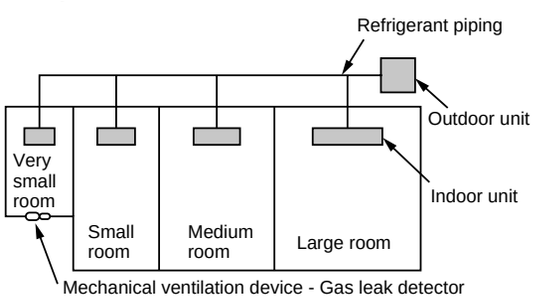

NOTE 3 :
The minimum indoor floor area compared with the amount of refrigerant is roughly as follows:
(When the ceiling is 2.7m high)

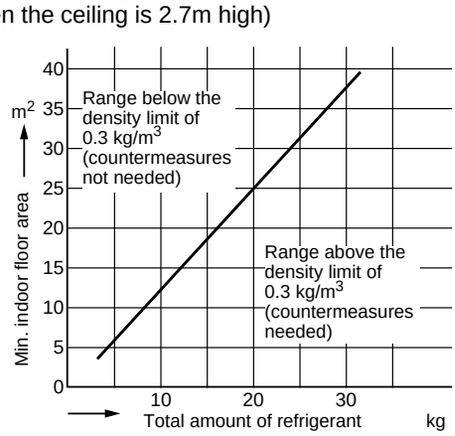

Toshiba Carrier (Thailand) Co., Ltd.

144/9 MOO 5, BANGKADI INDUSTRIAL PARK, TIVANON ROAD, TAMBOL BANGKADI,
AMPHUR MUANG, PATHUMTHANI 12000, THAILAND.