FILE NO. SVM-23014-1

TOSHIBA

SERVICE MANUAL

AIR-CONDITIONER

SPLIT TYPE

Indoor Unit

RAS-B13E2KVG-E1

Outdoor Unit

RAS-13E2AVG-E

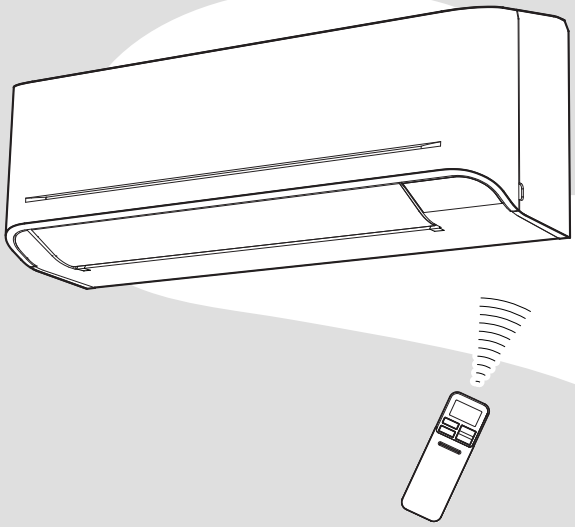

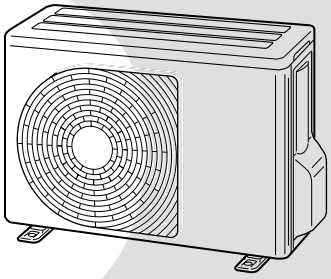

R32 or R410A

INVERTER

Revised on Sep, 2023

CONTENTS

1. SAFETY PRECAUTIONS 3
2. SPECIFICATIONS 6
3. REFRIGERANT R32 8
4. CONSTRUCTION VIEWS 16
5. WIRING DIAGRAM 18
6. SPECIFICATIONS OF ELECTRICAL PARTS 19
7. REFRIGERANT CYCLE DIAGRAM 20
8. CONTROL BLOCK DIAGRAM 22
9. OPERATION DESCRIPTION 24
10. INSTALLATION PROCEDURE 51
11. HOW TO DIAGNOSE THE TROUBLE 70
12. HOW TO REPLACE THE MAIN PARTS 96
13. EXPLODED VIEWS AND PARTS LIST 109

1. SAFETY PRECAUTIONS

	Read the precautions in this manual carefully before operating the unit.		This appliance is filled with R32. (Flammable Material)
	Information included in the Operation Manual and/or Installation Manual.		Service personnel should be handing this equipment with reference to the Installation Manual.

Warning Indications on the Air Conditioner Unit

Warning indication	Description
CAUTION **BURST HAZARD** Open the service valves before the operation, otherwise there might be the burst.	**CAUTION** **BURST HAZARD** Open the service valves before the operation, otherwise there might be the burst.

For general public use

Power supply cord and connecting cable of appliance use shall be at least polychloroprene sheathed flexible cord (design H07RN-F) or cord designation 60245 IEC66. (Shall be installed in accordance with national wiring regulations.)

- Read this “SAFETY PRECAUTIONS” carefully before servicing.
- The precautions described below include the important items regarding safety. Observe them without fail.
- After the servicing work, perform a trial operation to check for any problem.
- Turn off the main power supply switch (or breaker) before the unit maintenance.

■ **Important information regarding the refrigerant used**
This product contains fluorinated greenhouse gases.
Do not vent gases in to the atmosphere. Refrigerant type: **R32**
GWP(1) value: **675*** (ex. R32 ref. AR4)
(1)GWP = global warming potential
The refrigerant quantity is indicated on the unit name plate.
* This value is based on F gas regulation 517/2014

CAUTION

New Refrigerant Air Conditioner Installation

- **THIS AIR CONDITIONER ADOPTS THE NEW HFC REFRIGERANT (R32) WHICH DOES NOT DESTROY OZONE LAYER.**

R32 refrigerant is apt to be affected by impurities such as water, oxidizing membrane, and oils because the working pressure of R32 refrigerant is approx. 1.6 times of refrigerant R22. Accompanied with the adoption of the new refrigerant, the refrigeration machine oil has also been changed. Therefore, during installation work, be sure that water, dust, former refrigerant, or refrigeration machine oil does not enter into the new type refrigerant R32 air conditioner circuit.

To prevent mixing of refrigerant or refrigerating machine oil, the sizes of connecting sections of charging port on main unit and installation tools are different from those used for the conventional refrigerant units.

Accordingly, special tools are required for the new refrigerant (R32) units. For connecting pipes, use new and clean piping materials with high pressure fittings made for R32 only, so that water and/or dust does not enter. Moreover, do not use the existing piping because there are some problems with pressure fittings and possible impurities in existing piping.

CAUTION

TO DISCONNECT THE APPLIANCE FROM THE MAIN POWER SUPPLY

This appliance must be connected to the main power supply by a circuit breaker or a switch with a contact separation of at least 3 mm.

DANGER

- **ASK AN AUTHORIZED DEALER OR QUALIFIED INSTALLATION PROFESSIONAL TO INSTALL/MAINTAIN THE AIR CONDITIONER.**
  INAPPROPRIATE SERVICING MAY RESULT IN WATER LEAKAGE, ELECTRIC SHOCK OR FIRE.
- TURN OFF MAIN POWER SUPPLY BEFORE ATTEMPTING ANY ELECTRICAL WORK. MAKE SURE ALL POWER SWITCHES ARE OFF. FAILURE TO DO SO MAY CAUSE ELECTRIC SHOCK.

> ⚠ **DANGER: HIGH VOLTAGE**
> The high voltage circuit is incorporated.
> Be careful to do the check service, as the electric shock may be caused in case of touching parts on the P.C. board by hand.

- CORRECTLY CONNECT THE CONNECTING CABLE. IF THE CONNECTING CABLE IS INCORRECTLY CONNECTED, ELECTRIC PARTS MAY BE DAMAGED.
- CHECK THAT THE EARTH WIRE IS NOT BROKEN OR DISCONNECTED BEFORE SERVICE AND INSTALLATION. FAILURE TO DO SO MAY CAUSE ELECTRIC SHOCK.
- DO NOT INSTALL NEAR CONCENTRATIONS OF COMBUSTIBLE GAS OR GAS VAPORS. FAILURE TO FOLLOW THIS INSTRUCTION CAN RESULT IN FIRE OR EXPLOSION.
- TO PREVENT THE INDOOR UNIT FROM OVERHEATING AND CAUSING A FIRE HAZARD, PLACE THE UNIT WELL AWAY (MORE THAN 2 M) FROM HEAT SOURCES SUCH AS RADIATORS, HEAT REGISTORS, FURNACE, STOVES, ETC.
- WHEN MOVING THE AIR-CONDITIONER FOR INSTALLATION IN ANOTHER PLACE, BE VERY CAREFUL NOT TO ALLOW THE SPECIFIED REFRIGERANT (R410A) TO BECOME MIXED WITH ANY OTHER GASEOUS BODY INTO THE REFRIGERATION CIRCUIT. IF AIR OR ANY OTHER GAS IS MIXED IN THE REFRIGERANT, THE GAS PRESSURE IN THE REFRIGERATION CIRCUIT WILL BECOME ABNORMALLY HIGH AND IT MAY RESULT IN THE PIPE BURSTING AND POSSIBLE PERSONNEL INJURIES.
- IN THE EVENT THAT THE REFRIGERANT GAS LEAKS OUT OF THE PIPE DURING THE SERVICE WORK AND THE INSTALLATION WORK, IMMEDIATELY LET FRESH AIR INTO THE ROOM. IF THE REFRIGERANT GAS IS HEATED, SUCH AS BY FIRE, GENERATION OF POISONOUS GAS MAY RESULT.

WARNING

- Never modify this unit by removing any of the safety guards or bypassing any of the safety interlock switches.
- Do not install in a place which cannot bear the weight of the unit. Personal injury and property damage can result if the unit falls.
- Before doing the electrical work, attach an approved plug to the power supply cord. Also, make sure the equipment is properly earthed.
- Appliance shall be installed in accordance with national wiring regulations. If you detect any damage, do not install the unit. Contact your dealer immediately.
- Do not use any refrigerant different from the one specified for complement or replacement.
  Otherwise, abnormally high pressure may be generated in the refrigeration cycle, which may result in a failure or explosion of the product or an injury to your body.
- Do not use means to accelerate the defrosting process or to clean, other than those recommended by the manufacturer.
- The appliance shall be stored in a room without continuously operating ignition sources (for example: open flames, an operating gas appliance or an operating electric heater).
- Be aware that refrigerants may not contain an odour.
- Do not pierce or burn as the appliance is pressurized. Do not expose the appliance to heat, flame, sparks, or other sources or ignition. Else, it may explode and cause injury or death.

- For R32 model, use pipes, flare nut and tools which is specifi ed for R32 refrigerant. Using of existing (R22) piping, flare nut and tools may cause abnormally high pressure in the refrigerant cycle (piping), and possibly result in explosion and injury.
- Thickness of copper pipes used R32 must be more than 0.8mm. Never use copper pipes thinner than 0.8mm.
- Do not perform flare connection inside a building or dwelling or room, when joining the heat exchanger of indoor unit with interconnection piping. Refrigerant connection inside a building or dwelling or room must be made by brazing or welding. Joint connection of indoor unit by flaring method can only be made at outdoor or at outside of building or dwelling or room. Flare connection may cause gas leak and flammable atmosphere.
- After completion of installation or service, confirm there is no leakage of refrigerant gas. It may generate toxic gas when the refrigerant contacts with fire.
- Comply with national gas regulations.
- Do not add any other devices without factory advice.

WARNING

- **After installation work, make sure below before operation.**
  - Connection pipes are connected properly and no leakage.
  - Packed valves are fully open.
  Running compressor without open packed valves may cause abnormal high pressure and parts failure.
  Leakage at connection piping may suck air and make further high pressure cause burst and injure.
- **During pump down work make sure below process.**
  - Don't mix air into the refrigerant cycle.
  - Stop the compressor before removing piping after packed valves are fully closed. Removing piping under the compressor running and packed valves open,
  air might be sucked and refrigeration cycle pressure becomes abnormally high,
  and it causes burst or injury on persons.

CAUTION

- Exposure of unit to water or other moisture before installation may result in an electrical short.
  Do not store in a wet basement or expose to rain or water.
- Do not install in a place that can increase the vibration of the unit. Do not install in a place that can amplify the noise level of the unit or where noise or discharged air might disturb neighbors.
- To avoid personal injury, be careful when handling parts with sharp edges.
- **Perform the specified installation work to guard against an earthquake.**
  If the air conditioner is not installed appropriately, accidents may occur due to the falling unit.
- Please read this installation manual carefully before installing the unit. It contains further important instructions for proper installation, Improper installation may cause fire, burst, electric shock, injury and water leakage.

For Reference:

If a heating operation would be continuously performed for a long time under the condition that the outdoor temperature is 0°C or lower, drainage of defrosted water may be difficult due to freezing of the bottom plate, resulting in a trouble of the cabinet or fan.

It is recommended to procure an antifreeze heater locally for a safe installation of the air conditioner.

For details, contact the dealer.

2. SPECIFICATIONS

2-1. Specification

Unit model	Indoor			**RAS-B13E2KVG-E1**	
	Outdoor			**RAS-13E2AVG-E**	
Cooling capacity			(kW)	3.30	
Cooling capacity range			(kW)	1.20-3.60	
Heating capacity			(kW)	3.60	
Heating capacity range			(kW)	0.97-4.50	
Power supply				1Ph/50Hz/220-240V	
Electric characteristic	Indoor	Operation mode		**Cooling**	**Heating**
		Running current	(A)	0.28-0.26	0.28-0.26
		Power consumption	(W)	40	40
		Power factor	(%)	64	64
	Outdoor	Operation mode		**Cooling**	**Heating**
		Running current	(A)	4.95-4.54	4.37-4.01
		Power consumption	(W)	960	830
		Power factor	(%)	93	92
		Starting current	(A)	-	-
COP (Cooling / Heating)				3.30/4.14	
Operating noise	Indoor	High	(Cooling / Heating) (dB-A)	41/42	
		Medium	(Cooling / Heating) (dB-A)	33/34	
		Low	(Cooling / Heating) (dB-A)	24/24	
	Outdoor		(Cooling / Heating) (dB-A)	48/49	
Indoor unit	Unit model			**RAS-B13E2KVG-E1**	
	Dimension	Height	(mm)	293	
		Width	(mm)	798	
		Depth	(mm)	230	
	Net weight		(kg)	9	
	Fan motor output		(W)	42	
	Air flow rate		(Cooling / Heating) (m^3 / hr)	620/750	
Outdoor unit	Unit model			**RAS-13E2AVG-E**	
	Dimension	Height	(mm)	530	
		Width	(mm)	660	
		Depth	(mm)	240	
	Net weight		(kg)	22	
	Compressor	Motor output	(W)	550	
		Type		Single rotary type with DC-inverter variable speed control	
		Model		KSK75D43UEZA	
	Fan motor output		(W)	43	
	Air flow rate		(Cooling / Heating) (m^3 / hr)	1980/1980	
Piping connection	Type			Flare connection	
	Indoor unit	Liquid side	(mm)	∅6.35	
		Gas side	(mm)	∅9.52	
	Outdoor unit	Liquid side	(mm)	∅6.35	
		Gas side	(mm)	∅9.52	
	Maximum length		(m)	15	
	Maximum charge-less length		(m)	15	
	Maximum height difference		(m)	12	
Refrigerant	Name of refrigerant			R32	
	Weight		(kg)	0.54	
Wiring connection		Power supply		3 Wires: Includes earth (Outdoor)	
		Interconnection		4 Wires: Includes earth	
Usable temperature range		Indoor	(Cooling / Heating) (°C)	21-32/ -28	
		Outdoor	(Cooling / Heating) (°C)	-15,46/-15,24	
Accessory	Indoor unit	Installation plate		1	
		Wireless remote controller		1	
		Batteries		2	
		Remote controller holder		1	
		Toshiba Ultra Fresh filter		1	
		Mounting screw		6(∅4x25L)	
		Remote controller holder Flat head wood screw		2(∅3.1x16L)	
		Installation manual		1	
		Owner's manual		1	

* The specification may be subject to change without notice for purpose of improvement.

2-2. Operation Characteristic Curve

<Cooling>

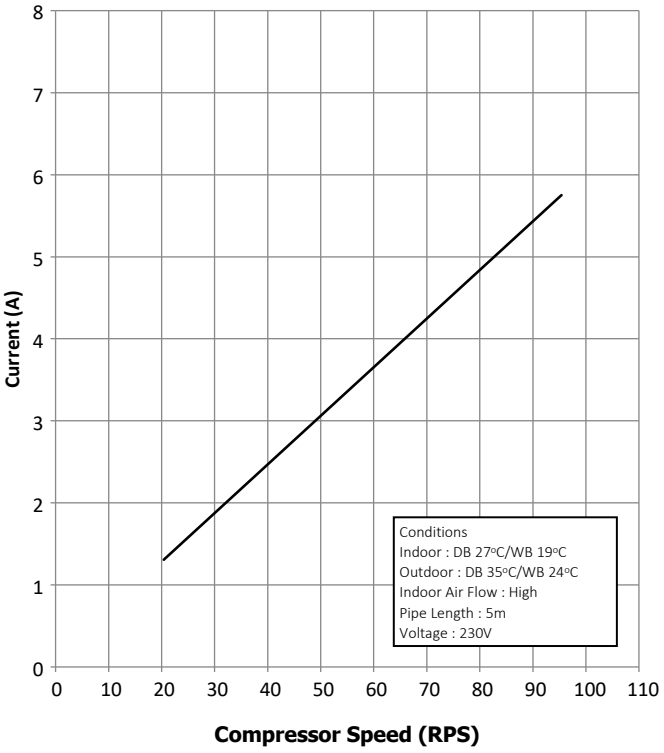

<Heating>

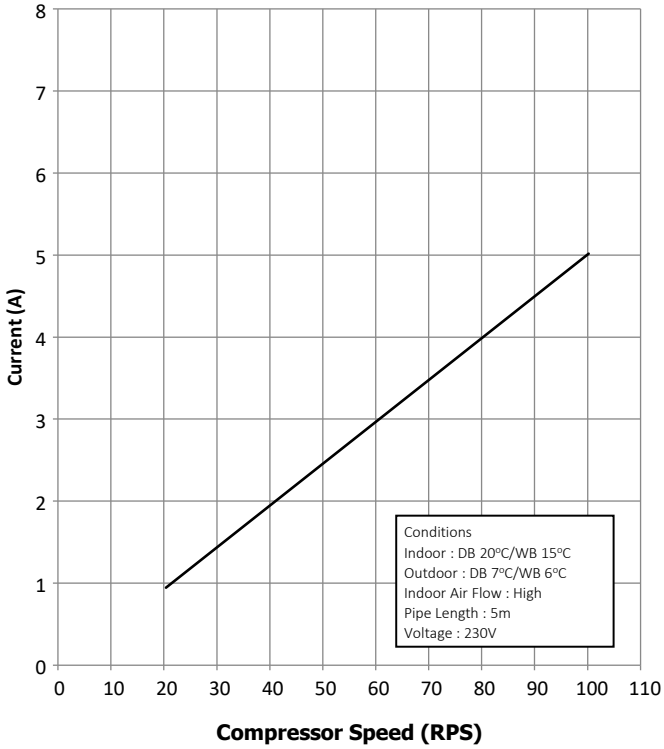

2-3. Capacity Variation ratio According to Temperature

<Cooling>

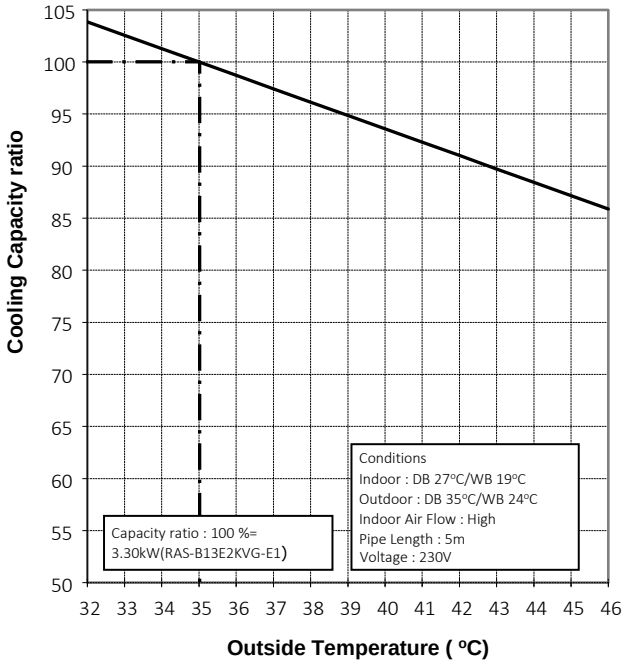

<Heating>

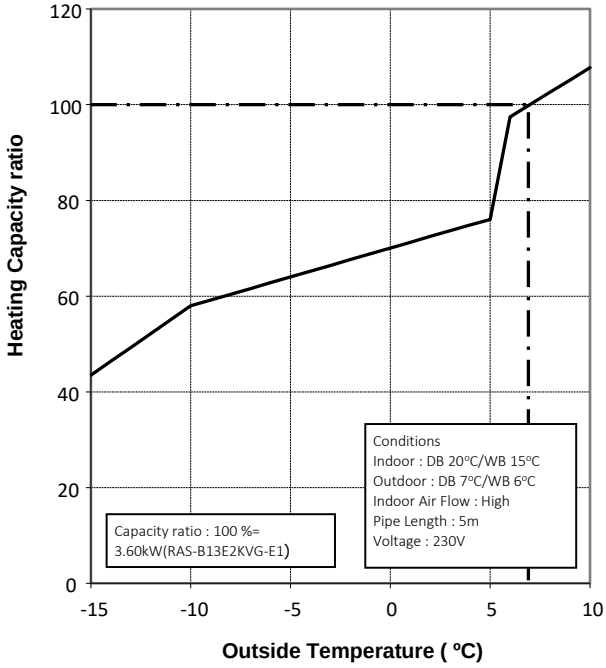

3. REFRIGERANT R32

This air conditioner adopts the new refrigerant HFC (R32) which does not damage the ozone layer.

The next section describes the precautions for air conditioner using the new refrigerant. Conforming to contents of the next section together with the general cautions included in this manual, perform the correct and safe work.

3-1. Safety During Installation/Servicing

The basic installation servicing work procedures are the same as conventional R410A models.
As R32's pressure is about 1.6 times higher than that of R22, improper installation/servicing may cause a serious trouble. By using tools and materi-als exclusive for R32, it is necessary to carry out installation/ servicing safely while taking the following precautions into consideration.

1. Never use refrigerant other than R32 in an air conditioner which is designed to operate with R32. If other refrigerant than R32 is mixed, pressure in the refrigeration cycle becomes abnormally high, and it may cause personal injury, etc. by a rupture.
2. Confirm the used refrigerant name, and use tools and materials exclusive for the refrigerant.
   The refrigerant name R32 is indicated on the visible place of the outdoor unit of the air conditioner using R32 as refrigerant. To prevent mischarging, the diameter of the service port differs from that of R22.
   R32 and other HFCs are heavier than air, and therefore they are inclined to settle near the floor surface.
   If the gas fills up the room or the bottom part of a room, it may also cause oxygen deficiency and may reach its combustion concentration.
   In order to prevent oxygen deficiency and R32 combustion, keep the room well-ventilated for a healthy work environment.
   In particular, using HFCs in a basement room or confined area creates a higher risk; be sure to furnish the room with local exhaust ventilation.
   If a refrigerant leak is confirmed in a room an inadequately ventilated location, do not use a flame until the area has been ventilated appropriately and the work environment has been improved.
   The same applies in case of brazing, ensure appropriate ventilation to prevent oxygen deficiency and R32 combustion.
   Check that there are no dangerous or combustible items nearby, and ensure a fire extinguisher is close at hand.
   Keep a sufficient distance away from causes of fire (ignition sources) such as gas-burning equipment and electric heaters in places where installation, repairs, or similar work on air-conditioning equipment is performed.
3. If a refrigeration gas leakage occurs during installation/servicing, be sure to ventilate fully.
   If the refrigerant gas comes into contact with fire, a poisonous gas may occur.
4. When installing or removing an air conditioner, do not allow air moisture dust or oil to remain in the refrigeration cycle. Otherwise, pressure in the refrigeration cycle may become abnormally high so that a rupture or personal injury may be caused.
5. After completion of installation work, check to make sure that there is no refrigeration gas leakage.
   If the refrigerant gas leaks into the room, coming into contact with fire in the fan-driven heater, space heater, etc., a poisonous gas may occur
6. When an air conditioning system charged with a large volume of refrigerant is installed in a small room, it is necessary to exercise care so that, even when refrigerant leaks, its concentration does not exceed the marginal level.
   If the refrigerant gas leakage occurs and its concentration exceeds the marginal level, an oxygen starvation accident may result.
7. Be sure to carry out installation or removal according to the installation manual.
   Improper installation may cause refrigeration trouble, water leakage, electric shock, fire, etc.
8. Unauthorized modifications to the air conditioner may be dangerous. If a breakdown occurs please call a qualified air conditioner technician or electrician.
   Improper repair's may result in water leakage, electric shock and fire, etc.

3-2. Refrigerant Piping Installation

3-2-1. Piping Materials and Joints Used

For the refrigerant piping installation, copper pipes and joints are mainly used. Copper pipes and joints suitable for the refrigerant must be chosen and installed. Furthermore, it is necessary to use clean copper pipes and joints whose interior surfaces are less affected by contaminants.

1. Copper Pipes

It is necessary to use seamless copper pipes which are made of either copper or copper alloy and it is desirable that the amount of residual oil is less than 40 mg/10 m. Do not use copper pipes having a collapsed, deformed or discolored portion (especially on the interior surface).

Otherwise, the expansion valve or capillary tube may become blocked with contaminants.

As an air conditioner using R32 incurs pres-sure higher than when using R22, it is necessary to choose adequate materials.

Thicknesses of copper pipes used with R32 are as shown in Table 3-2-1. Never use copper pipes thinner than 0.8 mm even when it is available on the market.

Table 3-2-1 Thicknesses of annealed copper pipes

		Thickness (mm)	
Nominal diameter	**Outer diameter (mm)**	**R32(R410A)**	R22
1/4	6.35	0.80	0.80
3/8	9.52	0.80	0.80
1/2	12.70	0.80	0.80
5/8	15.88	1.00	1.00

2. Joints

For copper pipes, flare joints or socket joints are used. Prior to use, be sure to remove all contaminants.

a) Flare Joints

Flare joints used to connect the copper pipes cannot be used for pipings whose outer diameter exceeds 20 mm. In such a case, socket joints can be used.

Sizes of flare pipe ends, flare joint ends and flare nuts are as shown in Tables 3-2-3 to 3-2-6 below.

b) Socket Joints

Socket joints are such that they are brazed for connections, and used mainly for thick pipings whose diameter is larger than 20 mm.

Thicknesses of socket joints are as shown in Table 3-2-2.

Table 3-2-2 Minimum thicknesses of socket joints

Nominal diameter	Reference outer diameter of copper pipe jointed (mm)	Minimum joint thickness (mm)
1/4	6.35	0.50
3/8	9.52	0.60
1/2	12.70	0.70
5/8	15.88	0.80

3-2-2. Processing of Piping Materials

When performing the refrigerant piping installation, care should be taken to ensure that water or dust does not enter the pipe interior, that no other oil than lubricating oils used in the installed air-water heat pump is used, and that refrigerant does not leak. When using lubricating oils in the piping processing, use such lubricating oils whose water content has been removed. When stored, be sure to seal the container with an airtight cap or any other cover.

1. Flare processing procedures and precautions

a) Cutting the Pipe

By means of a pipe cutter, slowly cut the pipe so that it is not deformed.

b) Removing Burrs and Chips

If the flared section has chips or burrs, refrigerant leakage may occur.
Carefully remove all burrs and clean the cut surface before installation.

c) Insertion of Flare Nut

d) Flare Processing

Make certain that a clamp bar and copper pipe have been cleaned.

By means of the clamp bar, perform the flare processing correctly.

Use either a flare tool for R32 or conventional flare tool.

Flare processing dimensions differ according to the type of flare tool. When using a conventional flare tool, be sure to secure “dimension A” by using a gauge for size adjustment.

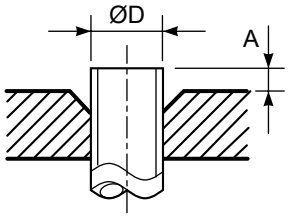

Fig. 3-2-1 Flare processing dimensions

Table 3-2-3 Dimensions related to flare processing for R32(R410A)

Nominal diameter	Outer diameter (mm)	Thickness (mm)	A (mm)		
			Flare tool for R32 clutch type	Conventional flare tool	
				Clutch type	Wing nut type
1/4	6.35	0.8	0 to 0.5	1.0 to 1.5	1.5 to 2.0
3/8	9.52	0.8	0 to 0.5	1.0 to 1.5	1.5 to 2.0
1/2	12.70	0.8	0 to 0.5	1.0 to 1.5	2.0 to 2.5
5/8	15.88	1.0	0 to 0.5	1.0 to 1.5	2.0 to 2.5

Table 3-2-4 Dimensions related to flare processing for R22

Nominal diameter	Outer diameter (mm)	Thickness (mm)	A (mm)		
			Flare tool for R22 clutch type	Conventional flare tool	
				Clutch type	Wing nut type
1/4	6.35	0.8	0 to 0.5	0.5 to 1.0	1.0 to 1.5
3/8	9.52	0.8	0 to 0.5	0.5 to 1.0	1.0 to 1.5
1/2	12.70	0.8	0 to 0.5	0.5 to 1.0	1.5 to 2.0
5/8	15.88	1.0	0 to 0.5	0.5 to 1.0	1.5 to 2.0

Table 3-2-5 Flare and flare nut dimensions for R32(R410A)

Nominal diameter	Outer diameter (mm)	Thickness (mm)	Dimension (mm)				Flare nut width (mm)
			A	B	C	D	
1/4	6.35	0.8	9.1	9.2	6.5	13	17
3/8	9.52	0.8	13.2	13.5	9.7	20	22
1/2	12.70	0.8	16.6	16.0	12.9	23	26
5/8	15.88	1.0	19.7	19.0	16.0	25	29

Table 3-2-6 Flare and flare nut dimensions for R22

Nominal diameter	Outer diameter (mm)	Thickness (mm)	Dimension (mm)				Flare nut width (mm)
			A	B	C	D	
1/4	6.35	0.8	9.0	9.2	6.5	13	17
3/8	9.52	0.8	13.0	13.5	9.7	20	22
1/2	12.70	0.8	16.2	16.0	12.9	20	24
5/8	15.88	1.0	19.7	19.0	16.0	23	27
3/4	19.05	1.0	23.3	24.0	19.2	34	36

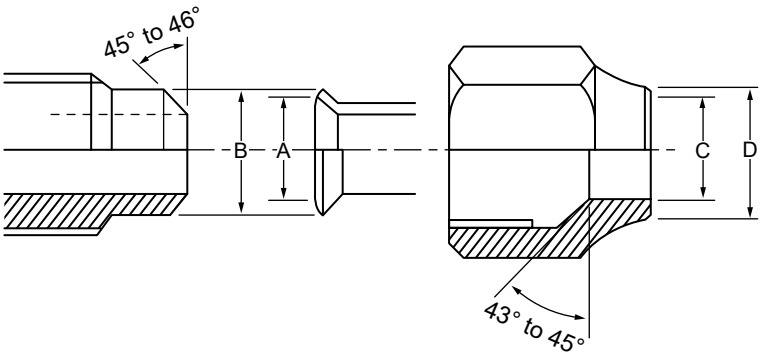

Fig. 3-2-2 Relations between flare nut and flare seal surface

2. Flare Connecting Procedures and Precautions

a) Make sure that the flare and union portions do not have any scar or dust, etc.

b) Correctly align the processed flare surface with the union axis.

c) Tighten the flare with designated torque by means of a torque wrench. The tightening torque for R32 is the same as that for conventional R22. Incidentally, when the torque is weak, the gas leakage may occur. When it is strong, the flare nut may crack and may be made non-removable. When choosing the tightening torque, comply with values designated by manufacturers. Table 3-2-7 shows reference values.

NOTE :

When applying oil to the flare surface, be sure to use oil designated by the manufacturer.
If any other oil is used, the lubricating oils may deteriorate and cause the compressor to burn out.

Table 3-2-7 Tightening torque of flare for R32(R410A) [Reference values]

Nominal diameter	Outer diameter (mm)	Tightening torque N•m (kgf•cm)	Tightening torque of torque wrenches available on the market N•m (kgf•cm)
1/4	6.35	14 to 18 (140 to 180)	16 (160), 18 (180)
3/8	9.52	33 to 42 (330 to 420)	42 (420)
1/2	12.70	50 to 62 (500 to 620)	55 (550)
5/8	15.88	63 to 77 (630 to 770)	65 (650)

3-3. Tools

3-3-1. Required Tools

The service port diameter of packed valve of the outdoor unit in the air-water heat pump using R32 is changed to prevent mixing of other refrigerant. To reinforce the pressure-resisting strength, flare processing dimensions and opposite side dimension of flare nut (For Ø12.7 copper pipe) of the refrigerant piping are lengthened.

The used refrigerating oil is changed, and mixing of oil may cause a trouble such as generation of sludge, clogging of capillary, etc. Accordingly, the tools to be used are classified into the following three types.

1. Tools exclusive for R32 (Those which cannot be used for conventional refrigerant (R22))
2. Tools exclusive for R32, but can be also used for conventional refrigerant (R22)
3. Tools commonly used for R32 and for conventional refrigerant (R22)

The table below shows the tools exclusive for R32 and their interchangeability.

Tools exclusive for R32 (The following tools for R410A are required.)

Tools whose specifications are changed for R32 and their interchangeability

No.	Used tool	Usage	R32(R410A) air-water heat pump installation		Conventional air-water heat pump installation
			Existence of new equipment for R32	Whether conventional equipment can be used	Whether new equipment can be used with conventional refrigerant
1	Flare tool	Pipe flaring	Yes	***(Note 1)**	○
2	Copper pipe gauge for adjusting projection margin	Flaring by conventional flare tool	Yes	***(Note 1)**	***(Note 1)**
3	Torque wrench (For Ø12.7)	Connection of flare nut	Yes	×	×
4	Gauge manifold	Evacuating, refrigerant charge, run check, etc.	Yes	×	×
5	Charge hose				
6	Vacuum pump adapter	Vacuum evacuating	Yes	×	○
7	Electronic balance for refrigerant charging	Refrigerant charge	Yes	×	○
8	Leakage detector	Gas leakage check	Yes	×	○

(Note 1) When flaring is carried out for R32(R410A) using the conventional flare tools, adjustment of projection margin is necessary. For this adjustment, a copper pipe gauge, etc. are necessary.

General tools (Conventional tools can be used.)

In addition to the above exclusive tools, the following equipments which serve also for R22 are necessary as the general tools.

1. Vacuum pump
   Use vacuum pump by attaching vacuum pump adapter.
2. Torque wrench (For Ø6.35, Ø9.52)
3. Pipe cutter
4. Reamer
5. Pipe bender
6. Level vial
7. Screwdriver (+, –)
8. Spanner or Monkey wrench
9. Hole core drill (Ø65)
10. Hexagon wrench (Opposite side 4mm)
11. Tape measure
12. Metal saw

Also prepare the following equipments for other installation method and run check.

1. Clamp meter
2. Thermometer
3. Insulation resistance tester
4. Electroscope

3-4. Recharging of Refrigerant

When it is necessary to recharge refrigerant, charge the specified amount of new refrigerant according to the following steps.

Recover the refrigerant, and check no refrigerant remains in the equipment.

↓

Connect the charge hose to packed valve service port at the outdoor unit's gas side.

↓

Connect the charge hose to the vacuum pump adapter.

↓

Open fully both packed valves at liquid and gas sides.

↓

Place the handle of the gauge manifold Low in the fully opened position, and turn on the vacuum pump's power switch. Then, evacuating the refrigerant in the cycle.

↓

When the compound gauge's pointer has indicated –0.1 Mpa (–76 cmHg), place the handle Low in the fully closed position, and turn off the vacuum pump's power switch.

↓

Keep the status as it is for 1 to 2 minutes, and ensure that the compound gauge's pointer does not return.

↓

Set the refrigerant cylinder to the electronic balance, connect the connecting hose to the cylinder and the connecting port of the electronic balance.

(For refrigerant charging, see the figure below.)

1. Never charge refrigerant exceeding the specified amount.
2. If the specified amount of refrigerant cannot be charged, charge refrigerant **bit by bit** in COOL mode.
3. Do not carry out additional charging.
   When additional charging is carried out if refrigerant leaks, the refrigerant composition changes in the refrigeration cycle, that is characteristics of the air conditioner changes, refrigerant exceeding the specified amount is charged, and working pressure in the refrigeration cycle becomes abnormally high pressure, and may cause a rupture or personal injury.

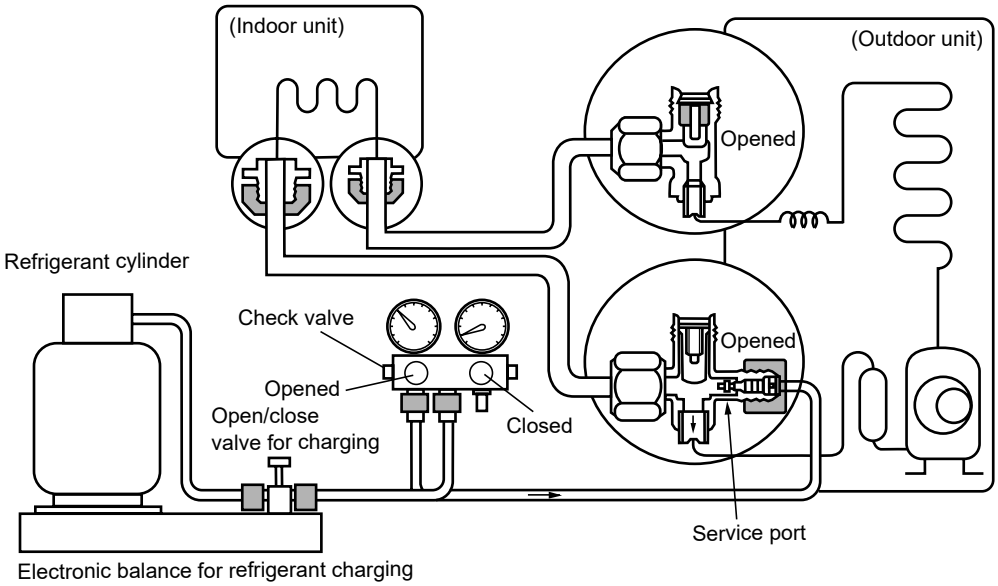

Fig. 3-4-1 Configuration of refrigerant charging

3-5. Brazing of Pipes

3-5-1. Materials for Brazing

1. Silver brazing filler

Silver brazing filler is an alloy mainly composed of silver and copper. It is used to join iron, copper or copper alloy, and is relatively expensive though it excels in solderability.

2. Phosphor bronze brazing filler

Phosphor bronze brazing filler is generally used to join copper or copper alloy.

3. Low temperature brazing filler

Low temperature brazing filler is generally called solder, and is an alloy of tin and lead. Since it is weak in adhesive strength, do not use it for refrigerant pipes.

1. Phosphor bronze brazing filler tends to react with sulfur and produce a fragile compound water solution, which may cause a gas leakage. Therefore, use any other type of brazing filler at a hot spring resort, etc., and coat the surface with a paint.
2. When performing brazing again at time of servicing, use the same type of brazing filler.

3-5-2. Flux

1. Reason why flux is necessary

- By removing the oxide film and any foreign matter on the metal surface, it assists the flow of brazing filler.
- In the brazing process, it prevents the metal surface from being oxidized.
- By reducing the brazing filler's surface tension, the brazing filler adheres better to the treated metal.

2. Characteristics required for flux

- Activated temperature of flux coincides with the brazing temperature.
- Due to a wide effective temperature range, flux is hard to carbonize.
- It is easy to remove slag after brazing.
- The corrosive action to the treated metal and brazing filler is minimum.
- It excels in coating performance and is harmless to the human body.

As the flux works in a complicated manner as described above, it is necessary to select an adequate type of flux according to the type and shape of treated metal, type of brazing filler and brazing method, etc.

3. Types of flux

- **Noncorrosive flux**

  Generally, it is a compound of borax and boric acid.
  It is effective in case where the brazing temperature is higher than 800°C.
- **Activated flux**

  Most of fluxes generally used for silver brazing are this type.
  It features an increased oxide film removing capability due to the addition of compounds such as potassium fluoride, potassium chloride and sodium fluoride to the borax-boric acid compound.

4. Piping materials for brazing and used brazing filler/flux

Piping material	Used brazing filler	Used flux
Copper - Copper	Phosphor copper	Do not use
Copper - Iron	Silver	Paste flux
Iron - Iron	Silver	Vapor flux

1. Do not enter flux into the refrigeration cycle.
2. When chlorine contained in the flux remains within the pipe, the lubricating oil deteriorates. Therefore, use a flux which does not contain chlorine.
3. When adding water to the flux, use water which does not contain chlorine (e.g. distilled water or ion-exchange water).
4. Remove the flux after brazing.

3-5-3. Brazing

As brazing work requires sophisticated techniques, experiences based upon a theoretical knowledge, it must be performed by a person qualified.

In order to prevent the oxide film from occurring in the pipe interior during brazing, it is effective to proceed with brazing while letting dry Nitrogen gas (N2) flow.

Never use gas other than Nitrogen gas.

1. Brazing method to prevent oxidation

1) Attach a reducing valve and a flow-meter to the Nitrogen gas cylinder.
2) Use a copper pipe to direct the piping material, and attach a flow-meter to the cylinder.
3) Apply a seal onto the clearance between the piping material and inserted copper pipe for Nitrogen in order to prevent backflow of the Nitrogen gas.
4) When the Nitrogen gas is flowing, be sure to keep the piping end open.
5) Adjust the flow rate of Nitrogen gas so that it is lower than 0.05 m^3/Hr or 0.02 MPa (0.2kgf/cm^2) by means of the reducing valve.
6) After performing the steps above, keep the Nitrogen gas flowing until the pipe cools down to a certain extent (temperature at which pipes are touchable with hands).
7) Remove the flux completely after brazing.

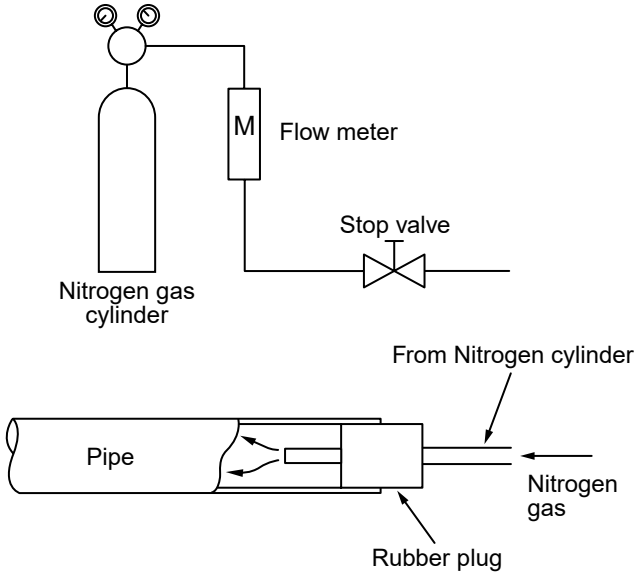

Fig. 3-5-1 Prevention of oxidation during brazing

4. CONSTRUCTION VIEWS

4-1. Indoor Unit

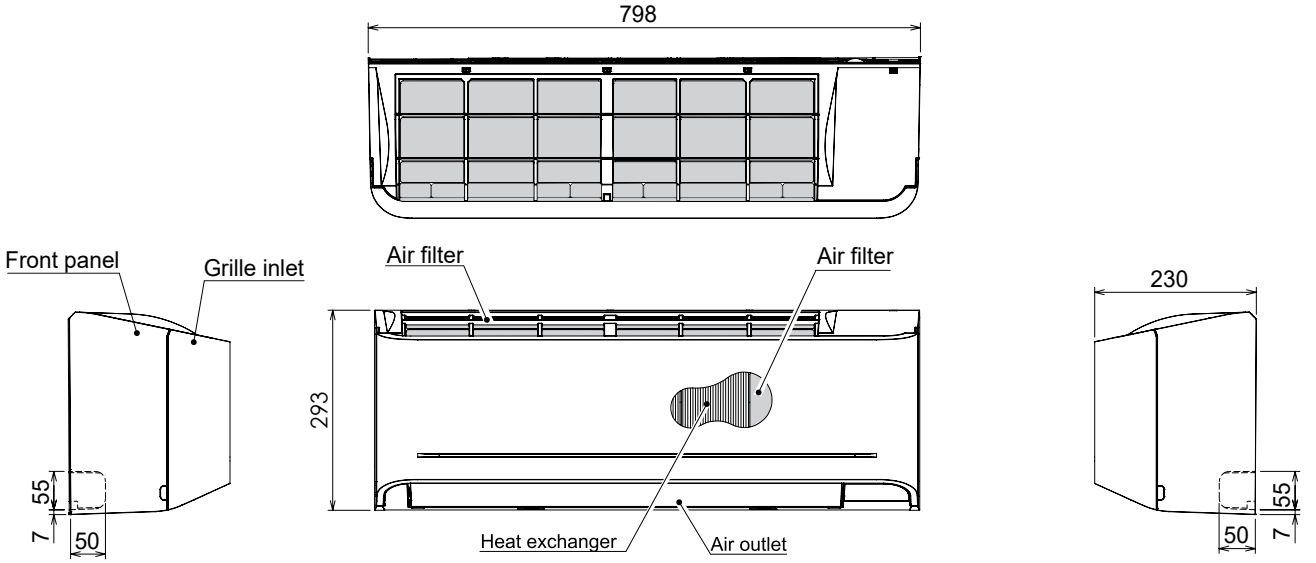

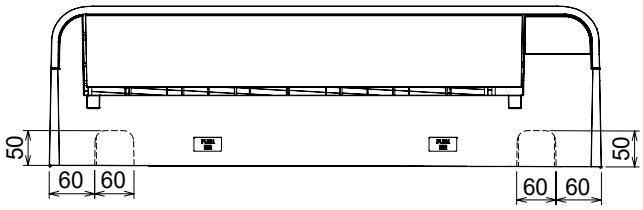

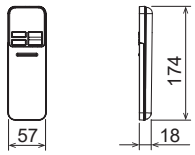

Wireless remote controller

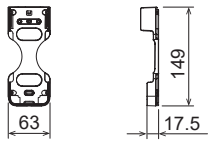

Remote controller holder

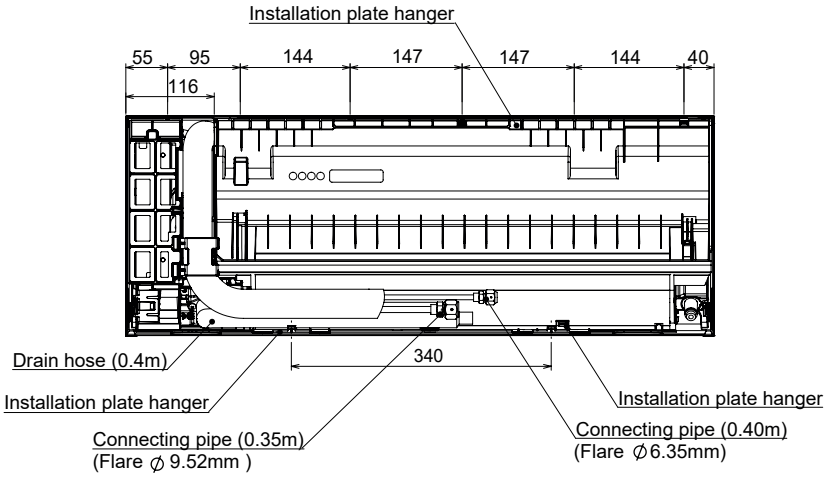

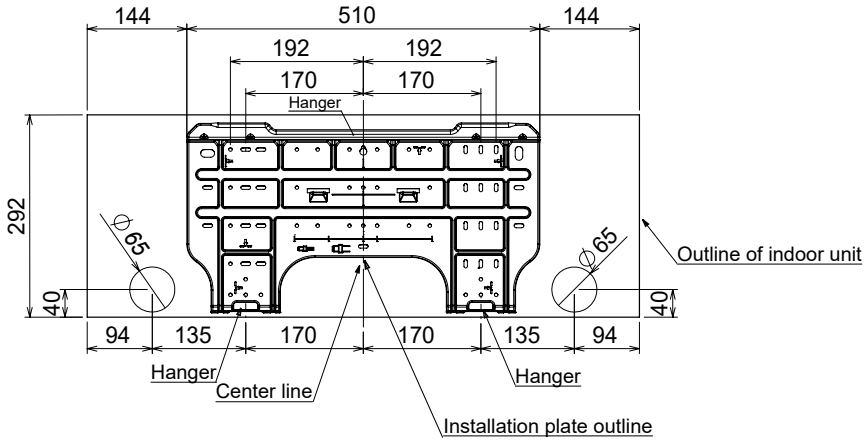

4-2. Outdoor Unit

(Unit : mm)

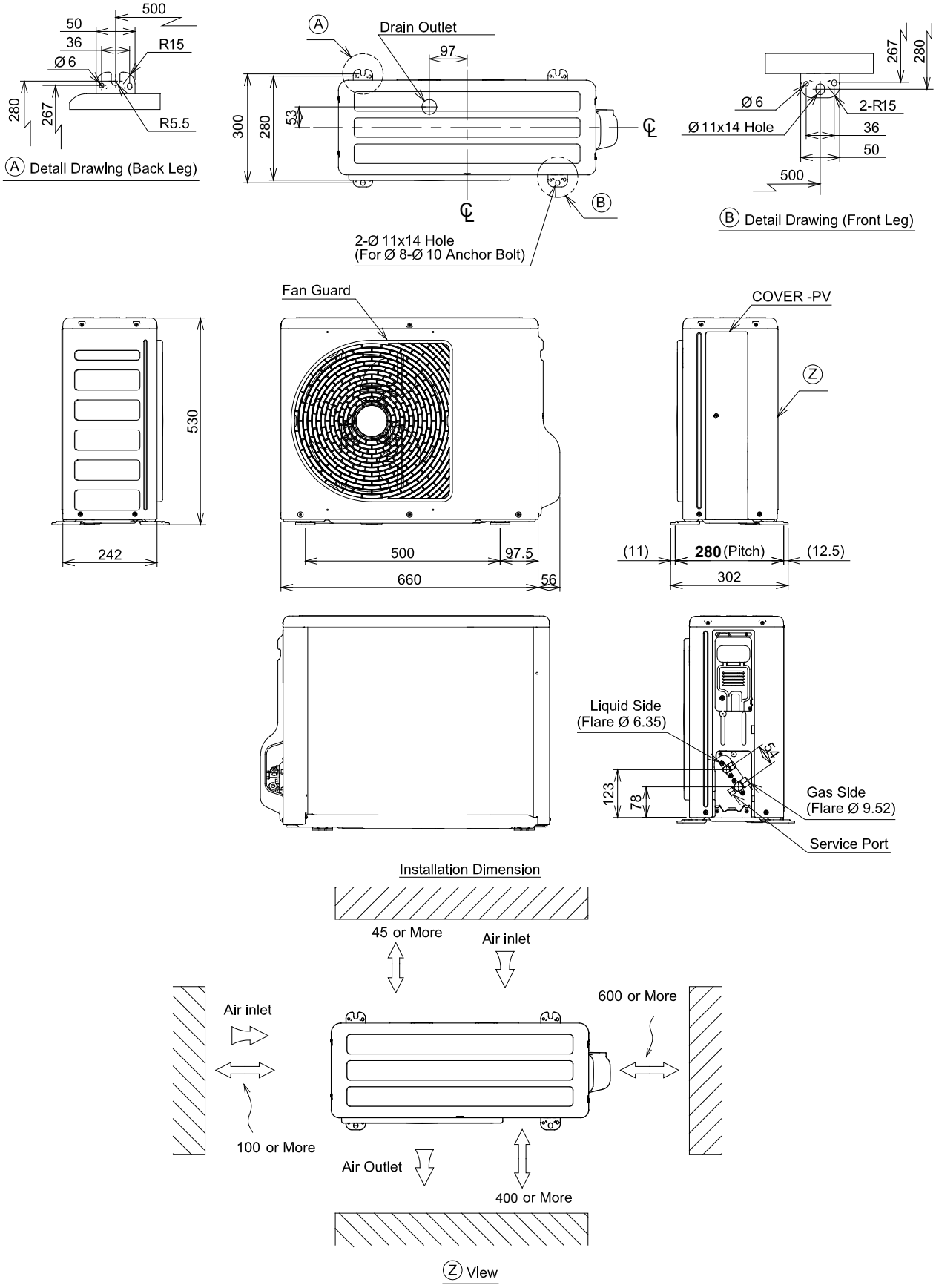

5. WIRING DIAGRAM

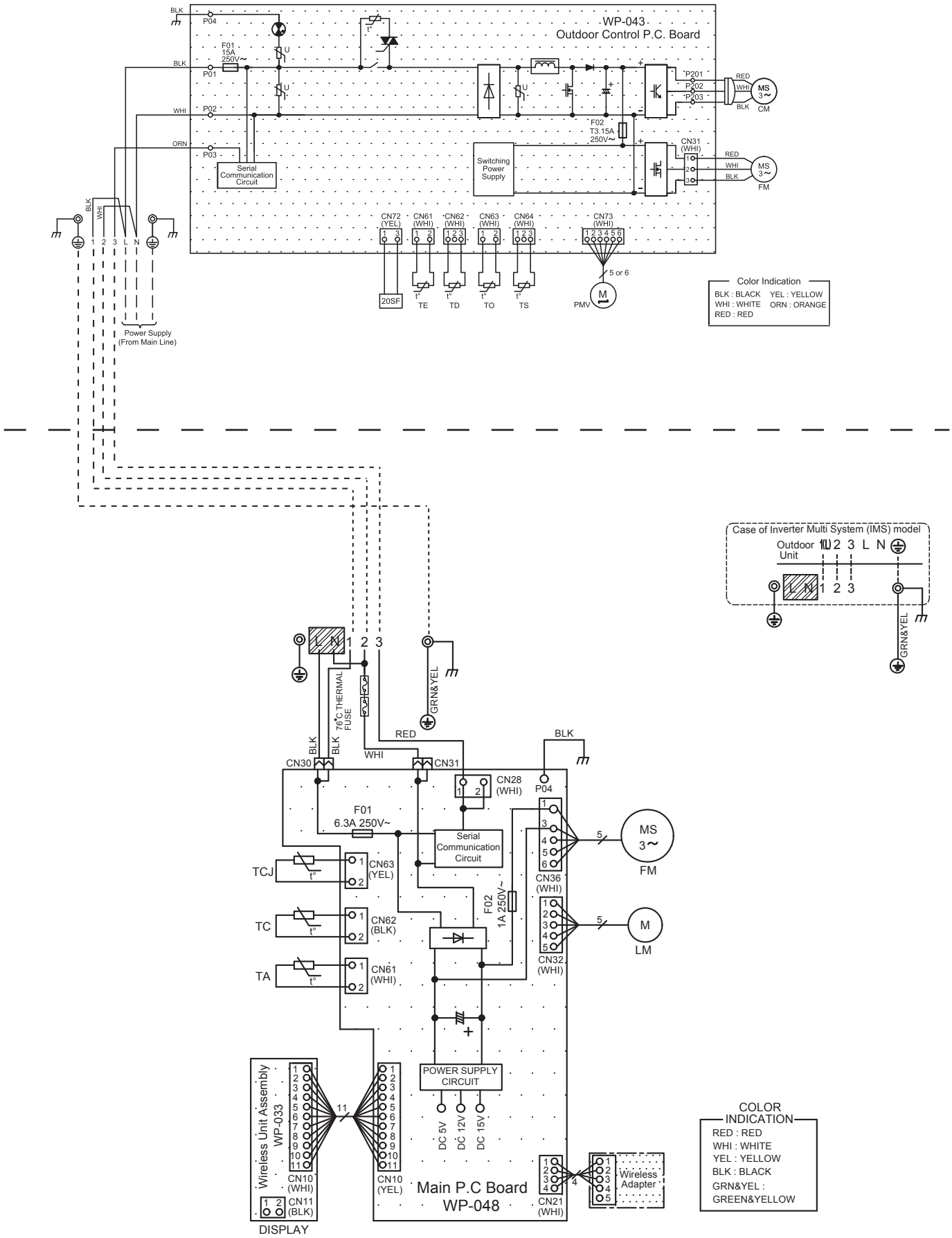

6. SPECIFICATIONS OF ELECTRICAL PARTS

6-1. Indoor Unit

No.	Parts name	Type name	Specifications
1	Fan Motor (for indoor)	WDF-340-30	DC 340V, 42W
2	Room temp. sensor (TA-sensor)	(-)	10kΩ at 25°C
3	Heat exchanger temp. sensor (TC-sensor)	(-)	10kΩ at 25°C
4	Heat exchanger temp. sensor (TCJ-sensor) (For 05-16k)	(-)	10kΩ at 25°C
5	Louver motor	24BYJ48-ST	Output (Rated) 4 phase, DC12V

6-2. Outdoor Unit

No.	Parts name	Type name	Specifications
1	Compressor	KSK75D43UEZA	3-Phases (6-Poles) ; 550W
2	Fan Motor	WDF-340-A43-1	DC 140-340V ; 43W
3	Pulse Modulating Valve (PMV) coil	PQ-M10012-000313	DC 12V
4	4-Way valve coil	DXQ-939	AC 220-240V
5	Suction temp. sensor (TS sensor)	(Inverter attached)	10kΩ at 25°C
6	Discharge temp. sensor (TD sensor)	(Inverter attached)	62kΩ at 20°C
7	Outside air temp. sensor (TO sensor)	(Inverter attached)	10kΩ at 25°C
8	Heat Exchanger temp. sensor (TE sensor)	(Inverter attached)	10kΩ at 25°C
9	Terminal block (5 poles)	JXO-5B	AC 250V, 20A

7. REFRIGERANT CYCLE DIAGRAM

7-1. Refrigerant Cycle Diagram

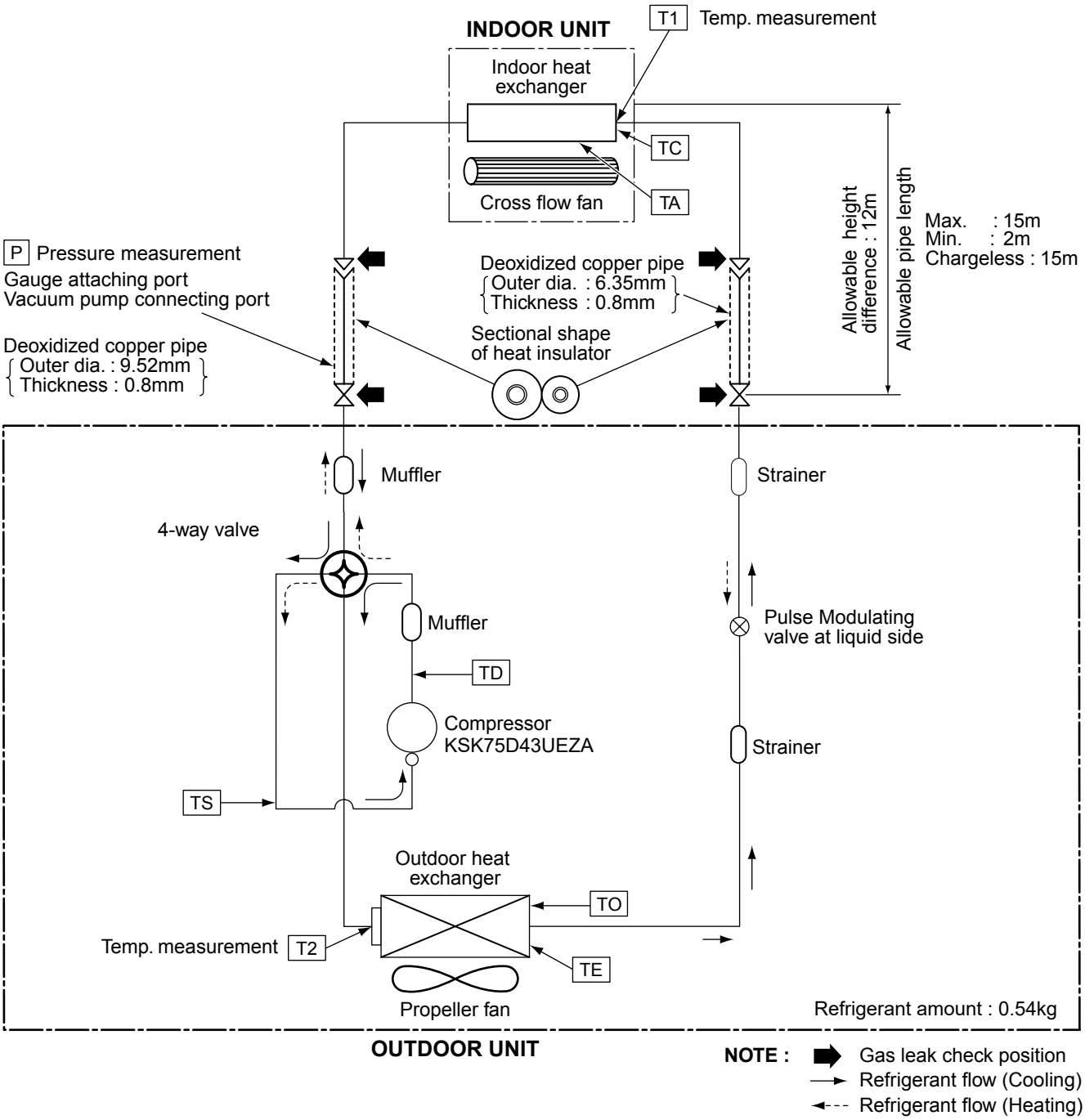

NOTE :

- The maximum pipe length of this air conditioner is 15 m. When the pipe length exceeds 15m, the additional charging of refrigerant, 20g per 1m for the part of pipe exceeded 15m is required. (Max. 100g)

7-2. Operation Data

<Cooling>

Temperature condition(°C)		Model name RAS-	Standard pressure P (MPa)	Heat exchanger pipe temp.		Indoor fan mode	Outdoor fan mode	Compressor revolution (rps)	Connecting piping (m)
Indoor	Outdoor			T1 (°C)	T2 (°C)				
27/19	35/-	B13E2KVG-E1	1.0 to 1.1	9 to 11	48 to 49	High	High	79	5.0

<Heating>

Temperature condition(°C)		Model name RAS-	Standard pressure P (MPa)	Heat exchanger pipe temp.		Indoor fan mode	Outdoor fan mode	Compressor revolution (rps)	Connecting piping (m)
Indoor	Outdoor			T1 (°C)	T2 (°C)				
20/-	7/6	B13E2KVG-E1	2.4 to 2.5	40 to 42	1 to 2	High	High	85	5.0

NOTES :

Measure surface temperature of heat exchanger pipe around center of heat exchanger path U bent.
(Thermistor thermometer)

8. CONTROL BLOCK DIAGRAM

8-1. Indoor Unit

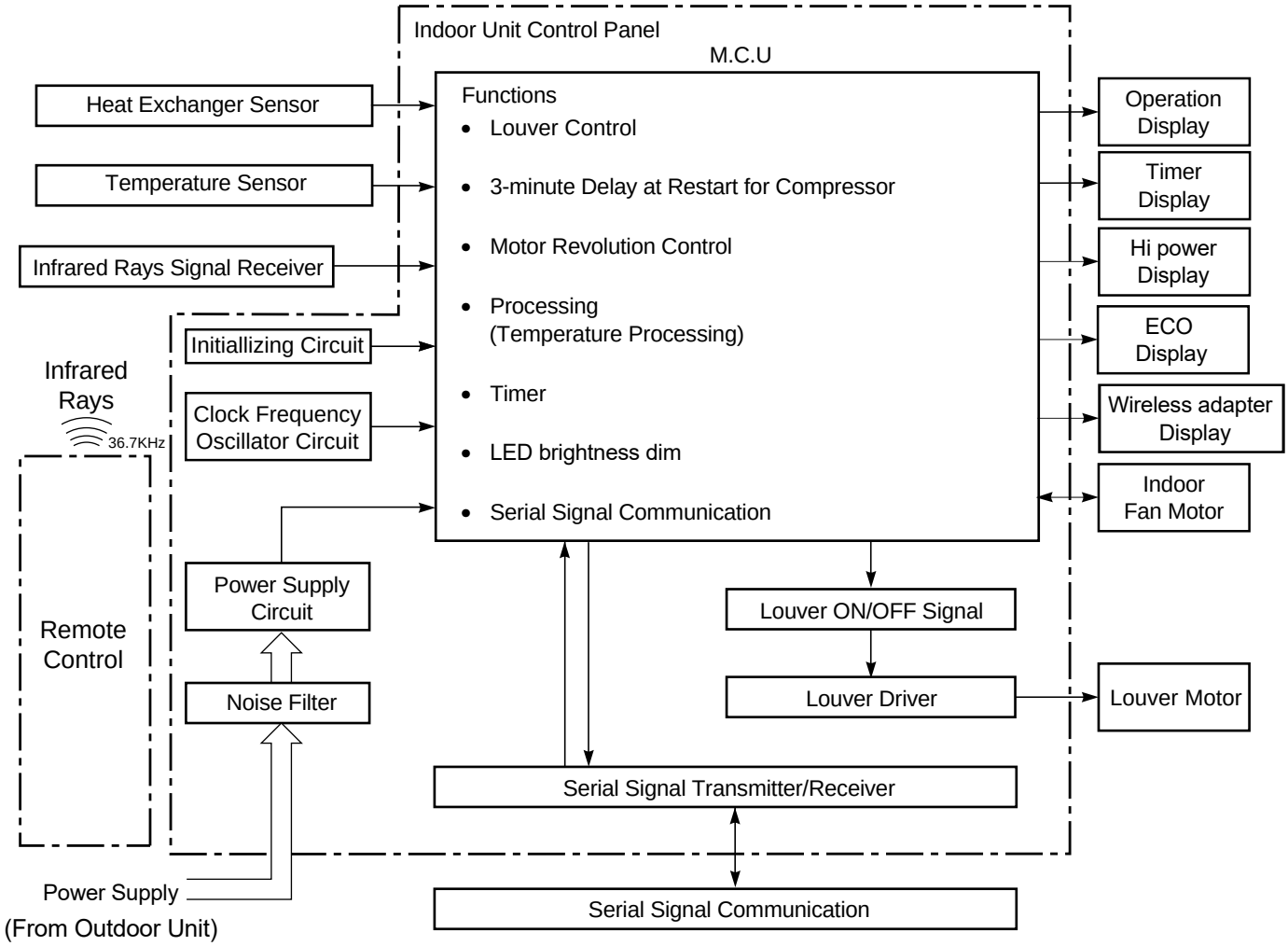

REMOTE CONTROL

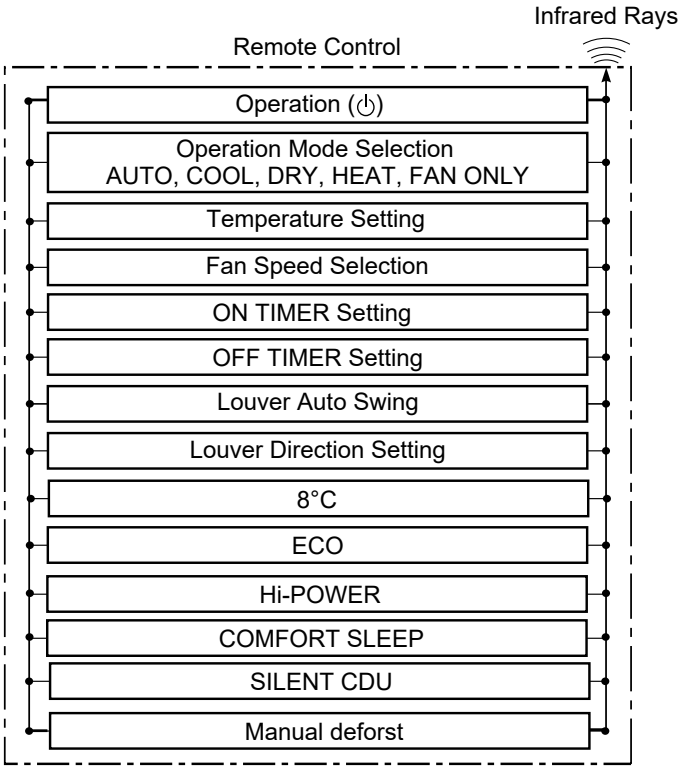

8-2. Outdoor Unit (Inverter Assembly)

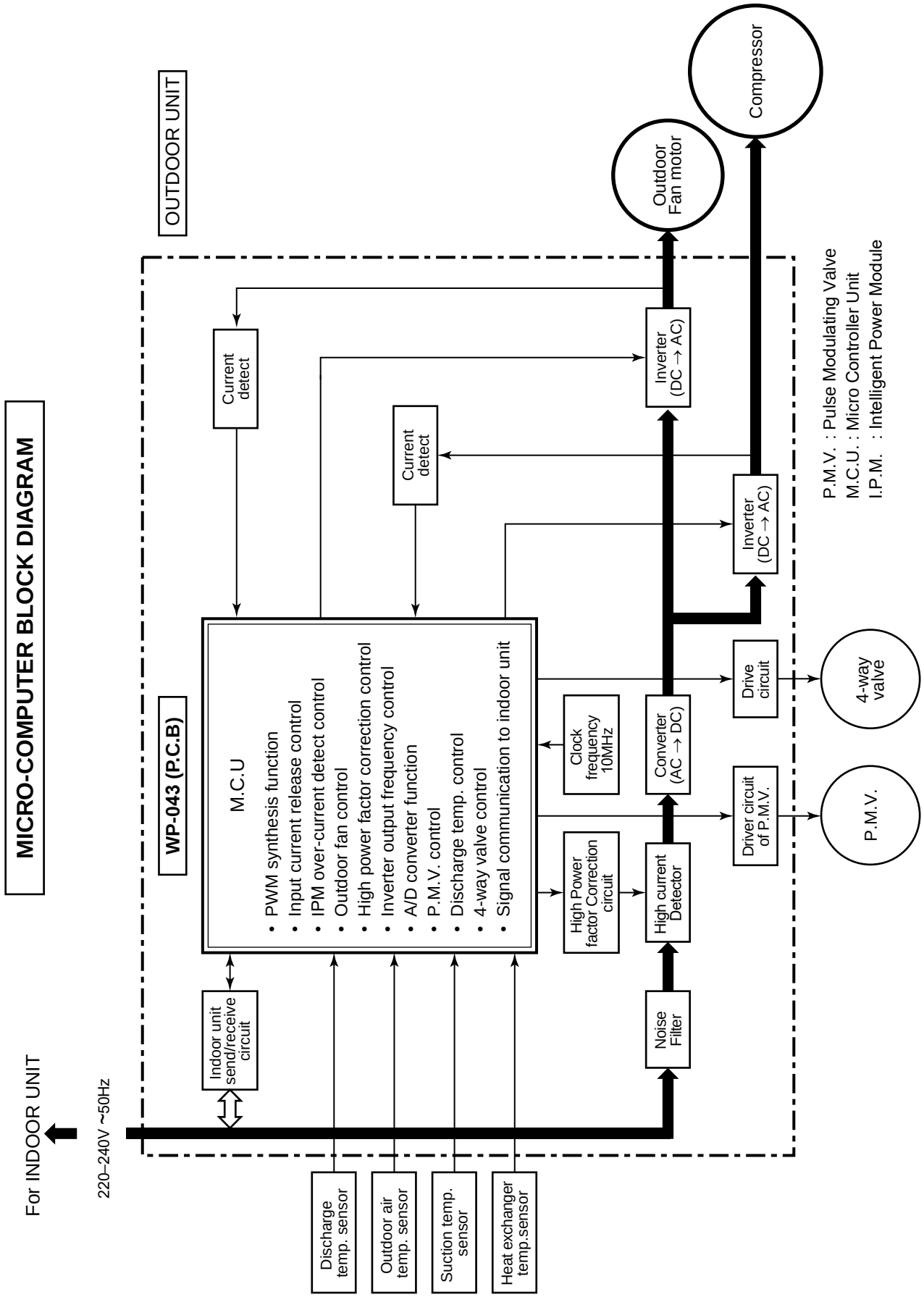

9. OPERATION DESCRIPTION

9-1. Outline of Air Conditioner Control

This air conditioner is a capacity-variable type air conditioner. Its system can control the speed of compressor motor according to load. The drive circuit for the indoor motor is mounted in the indoor unit. The drive circuits for outdoor motor and compressor are mounted in the outdoor unit.

The entire air conditioner is mainly controlled by the indoor unit controller. The indoor unit controller drives the indoor fan motor based upon command sent from the remote controller. Moreover, it also determines required speed of compressor motor and then transfers the operation command to the outdoor unit controller.

The outdoor unit controller erceives operation command from the indoor unit and controls revolution speed of the compressor motor.
The outdoor unit controller controls speed of compressor motor be controlling output voltage of the inverter and switching timing of supply power (current transfer timing), so that compressor motor operates according to the operation command. And then, the outdoor unit controller transfers the operating status back to the indoor unit controller.

As the compressor adopts six-poles brushless DC motor, the frequency of the supply power from inverter to compressor is three-times cycles of the actual number of revolution.

1. Role of indoor unit controller

The indoor unit controller judges the operation commands from the remote controller and assumes the following functions.

- Judgment of suction air temperature of the indoor heat exchanger by using the indoor temp. sensor. (TA sensor)
- Judgment of the indoor heat exchanger temperature by using heat exchanger sensor (TC sensor) (Prevent-freezing control, etc.)
- Louver motor control
- Indoor fan motor operation control
- LED (Light Emitting Diode) display control
- Transferring of operation command signal (Serial signal) to the outdoor unit
- Reception of information of operation status (Serial signal including outside temp. data) from the outdoor unit and judgment/display of error

2. Role of outdoor unit controller

Receiving the operation command signal (Serial signal) from the indoor unit controller, the outdoor unit performs compressor operation control as followed to judgment of serial signal from indoor side.

- Detection of inverter input current and current release operation
- Over-current detection and prevention operation to IGBT module (Compressor stop function)
- Compressor and outdoor fan stop function when serial signal is off (when the serial signal does not reach the board assembly of outdoor control by trouble of the signal system)
- Transferring of operation information (Serial signal) from outdoor unit controller to indoor unit controller
- Detection of outdoor temperature and operation revolution control
- Defrost control in heating operation (Temp. measurement by outdoor heat exchanger and control for 4-way valve and outdoor fan)

3. Contents of operation command signal (Serial signal) from indoor unit controller to outdoor unit controller

The following three types of signals are sent from the indoor unit controller.

- Operation mode set on the remote controller
- Compressor revolution command signal defined by indoor temperature and set temperature (Correction along with variation of room temperature and correction of indoor heat exchanger temperature are added.)
- Temperature of indoor heat exchanger
- For these signals ([Operation mode] and [Compressor revolution] indoor heat exchanger temperature), the outdoor unit controller monitors the input current to the inverter, and performs the followed operation within the range that current does not exceed the allowable value.

4. Contents of operation command signal (Serial signal) from outdoor unit controller to indoor unit controller

The following signals are sent from the outdoor unit controller.

- The current operation mode
- The current compressor revolution
- Outdoor temperature
- Existence of protective circuit operation
  For transferring of these signals, the indoor unit controller monitors the contents of signals, and judges existence of trouble occurrence. Contents of judgment are described below.
  - Whether distinction of the current operation status meets to the operation command signal
  - Whether protective circuit operates
    When no signal is received from the outdoor unit controller, it is assumed as a trouble.

9-2. Operation Description

1. Basic operation 26
   1. Operation control 26
   2. Cooling/Heating operation 27
   3. AUTO operation 27
   4. DRY operation 27
2. Indoor fan motor control 28
3. Outdoor fan motor control 30
4. Capacity control 31
5. Current release control 31
6. Release protective control by temperature of indoor heat exchanger 32
7. Defrost control (Only in heating operation) 33
8. Louver control 34
   1) Louver position 34
   2) Air direction adjustment 34
   3) Swing 34
9. ECO operation 35
10. Temporary operation 36
11. Discharge temperature control 36
12. High pressure control 36
13. Pulse Modulating valve (P.M.V.) control 37
14. Self-Cleaning function 38
15. Remote-A or B selection 40
16. Hi-POWER Mode 40
17. Silent Operation 41
18. 8°C heating /Frost protective operation 41
19. QUIET Mode 42
20. Display lamp brightness adjustment 42
21. Comfort Sleep Mode 43
22. Operation mode Select table 43
23. Short Timer 44

9-3. Auto Restart Function

9-3-1. How to Cancel the Auto Restart Function 45

9-3-2. How to Set the Auto Restart Function 46

9-3-3. Power Failure During Timer Operation 46

9-4. Remote Controller and Its Fuctions

9-4-1. Parts Name of Remote Controller 47

9-4-2. Operation of remote control 47

9-4-3. Name and Functions of Indications on Remote Controller 50

Item	Operation flow and applicable data, etc.	Description
1. Basic operation	**1. Operation control**	

Receiving the user's operation condition setup, the operation statuses of indoor/outdoor units are controlled.

1) The operation conditions are selected by the remote controller as shown in the below.
2) A signal is sent by ON button of the remote controller.
3) The signal is received by a sensor of the indoor unit and processed by the indoor controllers as shown in the below.
4) The indoor controller controls the indoor fan motor and louver motor.
5) The indoor controller sends the operation command to the outdoor controller, and sends/receives the control status with a serial signal.
6) The outdoor controller controls the operation as shown in the left, and also controls the compressor, outdoor fan motor, 4-way valve and pulse Modulating valve.

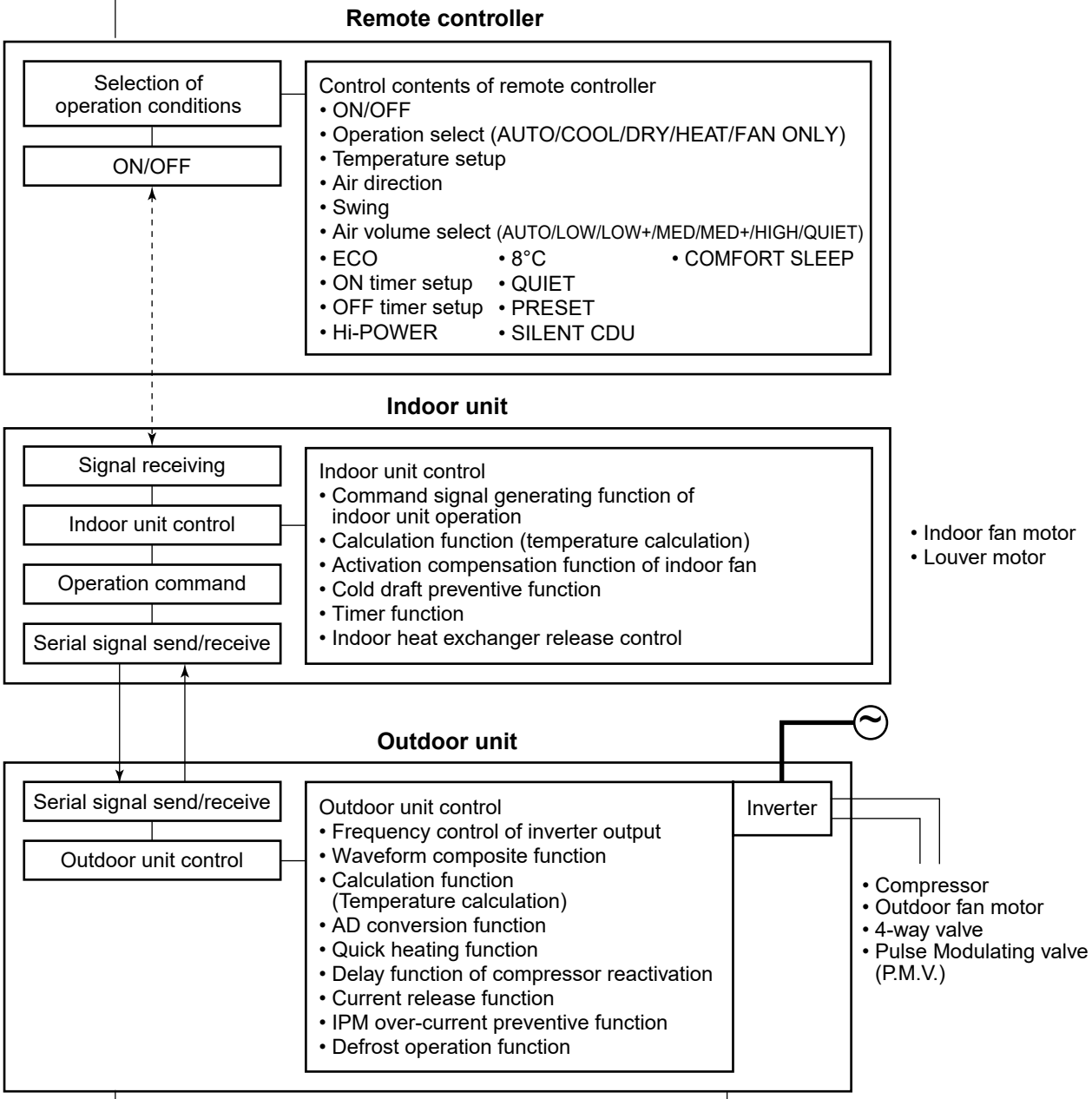

Item	Operation flow and applicable data, etc.	Description
1. Basic operation	**2. Cooling/Heating operation** The operations are performed in the following parts by controls according to cooling/heating conditions. 1) Receiving the operation ON signal of the remote controller, the cooling or heating operation signal starts being transferred form the indoor controller to the outdoor unit. 2) At the indoor unit side, the indoor fan is operated according to the contents of "**2. Indoor fan motor control**" and the louver according to the contents of "**8. Louver control**", respectively. 3) The outdoor unit controls the outdoor fan motor, compressor, pulse Modulating valve and 4-way valve according to the operation signal sent from the indoor unit. 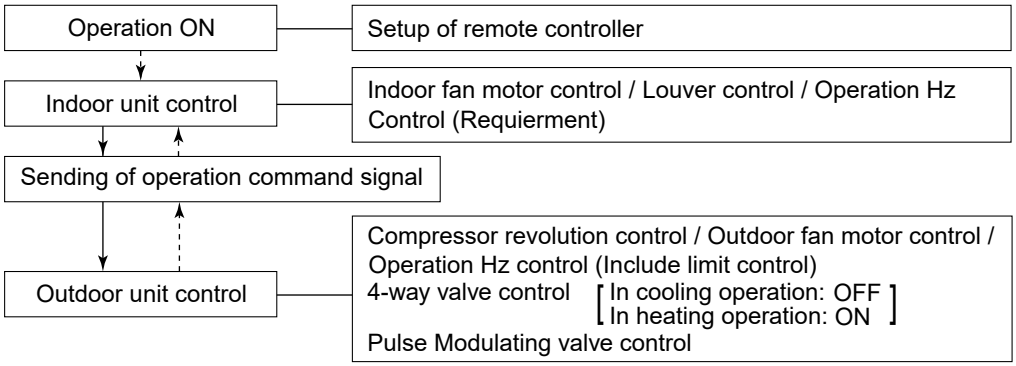 	
	3. AUTO operation Selection of operation mode As shown in the following figure, the operation starts by selecting automatically the status of room temperature (Ta) when starting AUTO operation. *1. When reselecting the operation mode, the fan speed is controlled by the previous operation mode. 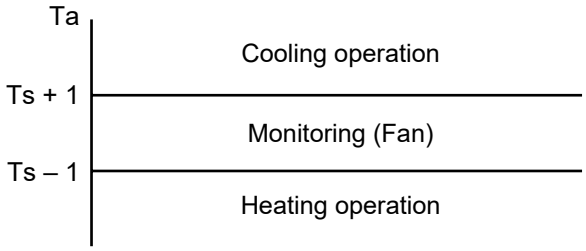 	1) Detects the room temperature (Ta) when the operation started. 2) Selects an operation mode from Ta in the left figure. 3) Fan operation continues until an operation mode is selected. 4) When AUTO operation has started within 2 hours after heating operation stopped and if the room temperature is 20°C or more, the fan operation is performed with "Super Ultra LOW" mode for 3 minutes. Then, select an operation mode. 5) If the status of compressor-OFF continues for 15 minutes the room temperature after selecting an operation mode (COOL/HEAT), reselect an operation mode.
	4. DRY operation DRY operation is performed according to the difference between room temperature and the setup temperature as shown below. In DRY operation, fan speed is controlled in order to prevent lowering of the room temperature and to avoid air flow from blowing directly to persons. 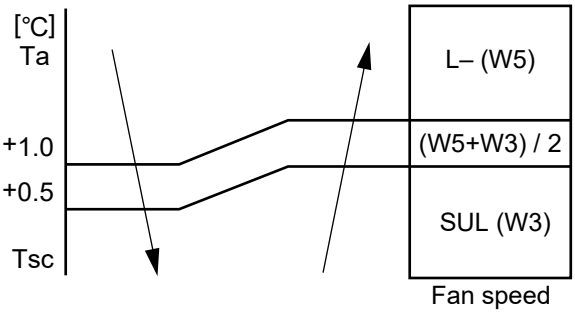 	1) Detects the room temperature (Ta) when the DRY operation started. 2) Starts operation under conditions in the left figure according to the temperature difference between the room temperature and the setup temperature (Tsc). Setup temperature (Tsc) = Set temperature on remote controller (Ts) + (0.0 to 1.0) 3) When the room temperature is lower 1°C or less than the setup temperature, turn off the compressor.

Item	Operation flow and applicable data, etc.	Description

2. Indoor fan motor control

<In cooling operation>

(This operation controls the fan speed at indoor unit side.)

The indoor fan (cross flow fan) is operated by the phase-control induction motor. The fan rotates in 5 stages in MANUAL mode, and in 5 stages in AUTO mode, respectively. (Table 1)

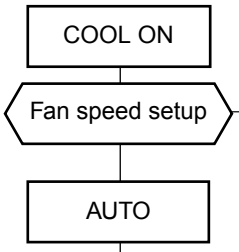

(Fig. 1)

Indication	Fan speed
L	W7
L+	(L + M) / 2
M	WA
M+	(M + H) / 2
H	WD

(Fig. 2)

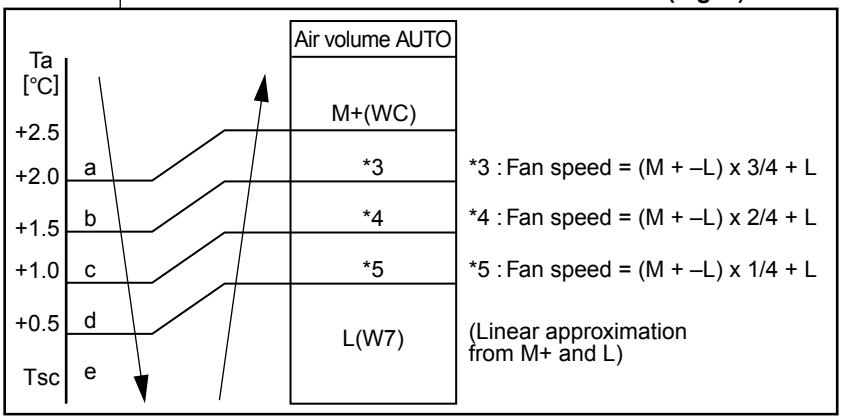

(Table 1) Indoor fan air flow rate

Fan speed level	Mode			RAS-B13E2KVG-E1			
				Cooling		Heating	
	Cool	Heat	Dry	Fan speed (rpm)	Air flow rate m^3/hr	Fan speed (rpm)	Air flow rate m^3/hr
WF		UH		1030	660	1190	790
WE	UH	H		1030	660	1140	750
WD	H	M+	UH	980	620	990	620
WC	M+		H	890	550	990	620
WB		M	M+	800	460	840	500
WA	M		M	800	460	800	480
W9		L+		750	440	730	440
W8	L+	L	L+	700	420	620	340
W7	L	L-		600	330	540	250
W6	L-		L	520	230	540	250
W5	UL	UL	L-	520	230	530	240
W4			UL	520	230	520	230
W3	SUL		SUL	520	230	520	230
W2		SUL		520	230	520	230
W1				500	210	500	210

*** Symbols**

UH : Ultra High
H : High
M+ : Medium+
M : Medium
L+ : Low+
L : Low
L- : Low–
UL : Ultra Low
SUL : Super Ultra Low

* The fan speed broadly varies due to position of the louver, etc. The described value indicates one under condition of inclining downward blowing.

1) When setting the fan speed to L, L+, M, M+ or H on the remote controller, the operation is performed with the constant speed shown in Fig. 1.

2) When setting the fan speed to AUTO on the remote controller, revolution of the fan motor is controlled to the fan speed level shown in Fig. 2 and Table 1 according to the setup temperature, room temperature, and heat exchanger temperature.

Item	Operation flow and applicable data, etc.	Description
2. Indoor fan motor control	**<In heating operation>**	1) When setting the fan speed to L, L+, M, M+ or H on the remote controller, the operation is performed with the constant speed shown in Fig. 3 and Table 1. 2) When setting the fan speed to AUTO on the remote controller, revolution of the fan motor is controlled to the fan speed level shown in Fig. 5 according to the set temperature and room temperature. 3) Min air flow rate is controlled by temperature of the indoor heat exchanger (Tc) as shown in Fig. 4. 4) Cold draft prevention, the fan speed is controlled by temperature of the indoor heat exchanger (Tc) as shown in Fig. 6. 5) In order to prevent Cold draft when compressor step during heating operation. Then louver will move to upper position and fan speed will reduce or off.

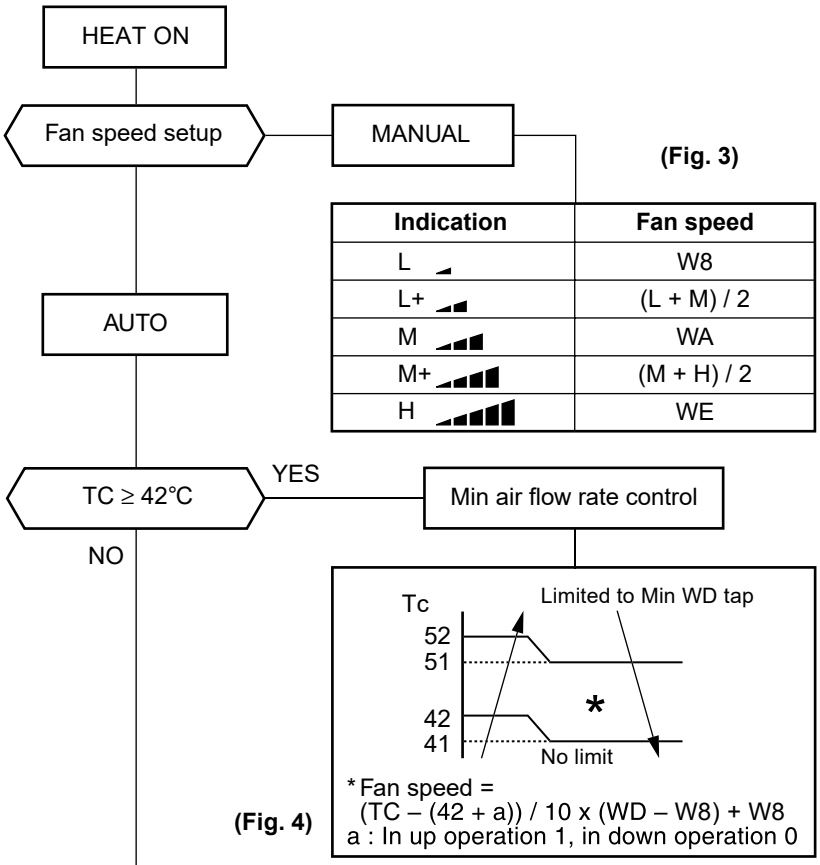

(Fig. 3)

Indication	Fan speed
L	W8
L+	(L + M) / 2
M	WA
M+	(M + H) / 2
H	WE

(Fig. 4)

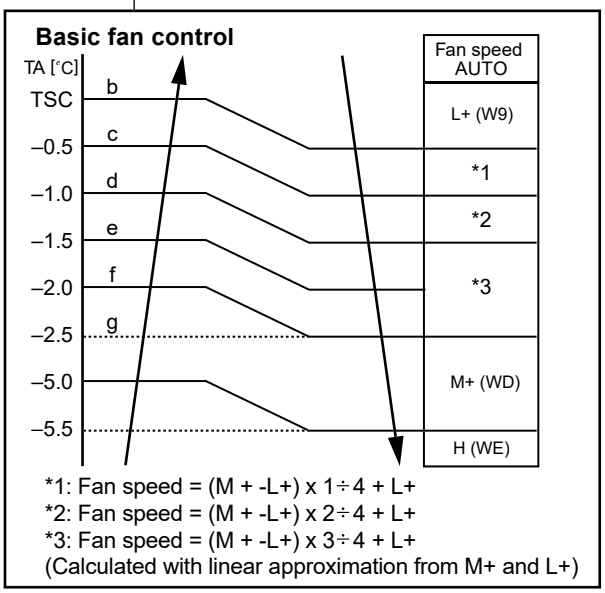

(Fig. 5)

Cold draft preventive control

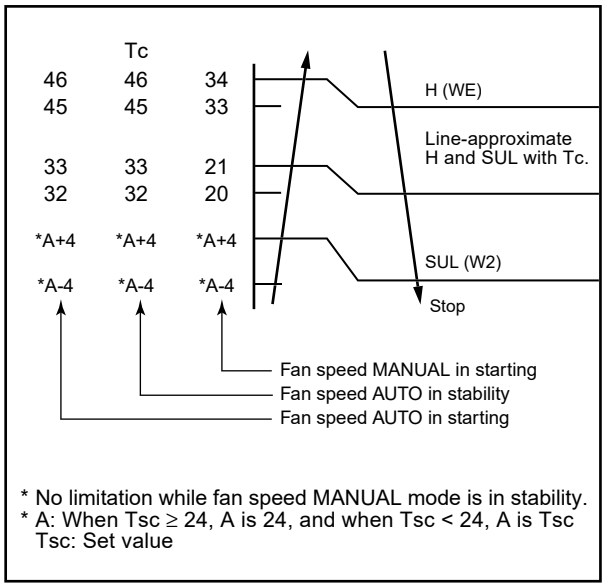

(Fig. 6)

[In starting and in stability]

	In starting	In stability
FAN AUTO	• Until 12 minutes passed after operation start • When 12 to 25 minutes passed after operation start and room temp. is 3°C or lower than set temp.	• When 12 to 25 minutes passed after operation start and room temp. is higher than (set temp. –3°C) • When 25 minutes or more passed after operation start
FAN Manual	• Room temp. < Set temp. –4°C	• Room temp. ≥ Set temp. –3.5°C

Item	Operation flow and applicable data, etc.	Description
3. Outdoor fan motor control	The blowing air volume at the outdoor unit side is controlled. Receiving the operation command from the controller of indoor unit, the controller of outdoor unit controls fan speed. * For the fan motor, a DC motor with non-stage variable speed system is used. However, it is limited to 8 stages for reasons of controlling.	1) The operation command sent from the remote controller is processed by the indoor unit controller and transferred to the controller of the outdoor unit. 2) When strong wind blows at outdoor side, the operation of air conditioner continues with the fan motor stopped. 3) Whether the fan is locked or not is detected, and the operation of air conditioner stops and an alarm is displayed if the fan is locked. 4) According to each operation mode, by the conditions of outdoor temperature (To) and compressor revolution, the speed of the outdoor fan shown in the table is selected.

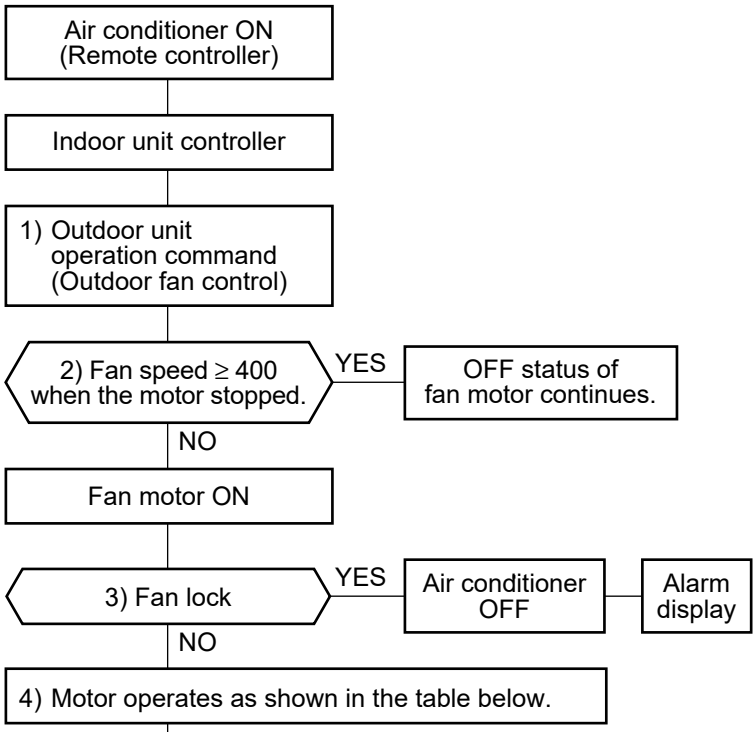

In cooling operation							
Compressor speed	RAS-13E2AVG-E	Hz < 22.8		22.8 ≤ Hz < 79.8		79.8 ≤ Hz	
Fan speed range		MIN	MAX	MIN	MAX	MIN	MAX
To	To ≥ 38°C	f6	fB	f8	fE	fA	fE
	To ≥ 28°C	f5	fA	f7	fB	f9	fE
	To ≥ 15°C	f3	f7	f5	f9	f7	fB
	To ≥ 5.5°C	f2	f5	f4	f7	f6	f9
	To ≥ 0°C	f1	f3	f3	f5	f4	f7
	To ≥ 0°C	f1	f2	f2	f4	f3	f5
When To is abnormal		OFF	fB	OFF	fE	f1	fE

In heating operation							
Compressor speed	RAS-13E2AVG-E	Hz < 30.0		30.0 ≤ Hz < 84.0		84.0 ≤ Hz	
Fan speed range		MIN	MAX	MIN	MAX	MIN	MAX
To	To ≥ 10°C	f7		f8		f9	
	To ≥ 5°C	f9		fB		fE	
	To ≥ -3°C	fE		fE		fE	
	To ≥ -10°C	fE		fE		fE	
	To < - 10°C	fE		fE		fE	
When To is abnormal		fE		fF		fF	

Outdoor fan speed (rpm)

Model name	Fan speed range															
	f0	f1	f2	f3	f4	f5	f6	f7	f8	f9	fA	fB	fC	fD	fE	fF
RAS-13E2AVG-E	0	380	380	390	460	520	520	620	720	750	790	790	800	900	900	900

Item	Operation flow and applicable data, etc.	Description
4. Capacity control	The cooling or heating capacity depending on the load is adjusted. According to difference between the setup value of temperature and the room temperature, the capacity is adjusted by the compressor revolution.	1) The difference between set temperature on remote controller (Ts) and room temperature (Ta) is calculated. 2) According to the temperature difference, the correction value of Hz signal which determines the compressor speed is set up. 3) The rotating position and speed of the motor are detected by the electromotive force occurred on the motor winding with operation of the compressor. 4) According to the difference resulted from comparison of the correction value of Hz signal with the present operation Hz, the inverter output and the commutation timing are varied. 5) Change the compressor motor speed by outputting power to the compressor. * The contents of control operation are same in cooling operation and heating operation

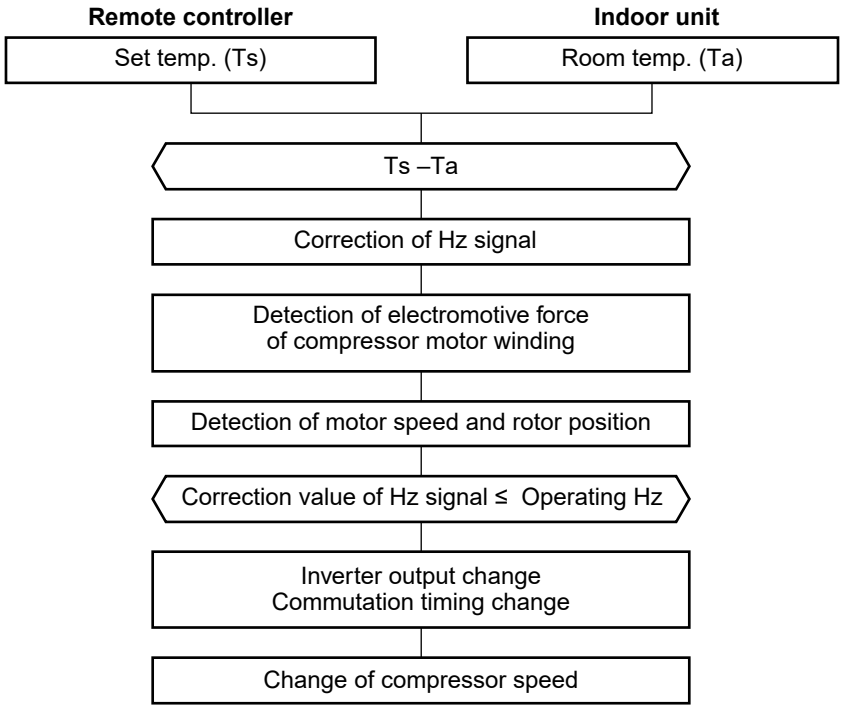

Item	Operation flow and applicable data, etc.	Description
5. Current release control	This function prevents troubles on the electronic parts of the compressor driving inverter. This function also controls drive circuit of the compressor speed so that electric power of the compressor drive circuit does not exceed the specified value.	1) The input current of the outdoor unit is detected in the inverter section of the outdoor unit. 2) According to the detected outdoor temperature, the specified value of the current is selected. 3) Whether the current value exceeds the specified value or not is judged. 4) If the current value exceeds the specified value, this function reduces the compressor speed and controls speed up to the closest one commanded from the indoor unit within the range which does not exceed the specified value.

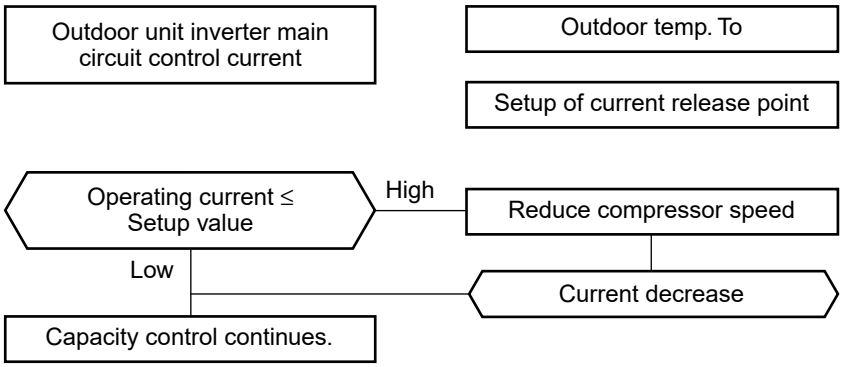

Mode	Outdoor temperature: To (°C)	Current Release Value (A)
		13k
Cooling	To ≥ 45	7.2
	45 > To ≥ 40	7.5
	To < 40	6.8
Heating	To ≥ 16	8.0
	16 > To ≥ 11	7.3
	To < 11	6.6

Item	Operation flow and applicable data, etc.	Description
6. Release protective control by temperature of indoor heat exchanger	**<In cooling/dry operation>** (Prevent-freezing control for indoor heat exchanger) In cooling/dry operation, the sensor of indoor heat exchanger detects evaporation temperature and controls the compressor speed so that temperature of the heat exchanger does not exceed the specified value. 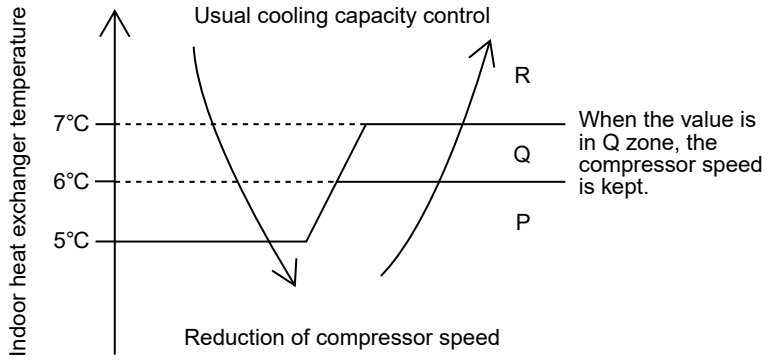 	1) When temperature of the indoor heat exchanger drops below 5°C, the compressor speed is reduced. (P zone) 2) When temperature of the indoor heat exchanger rises in the range from 6°C to under 7°C, the compressor speed is kept. (Q zone) 3) When temperature of the indoor heat exchanger rises to 7°C or higher, the capacity control operation returns to the usual control in cooling operation. (R zone)
	<In heating operation> (Prevent-overpressure control for refrigerating cycle) In heating operation, the sensor of indoor heat exchanger detects condensation temperature and controls the compressor speed so that temperature of the heat exchanger does not exceed the specified value. 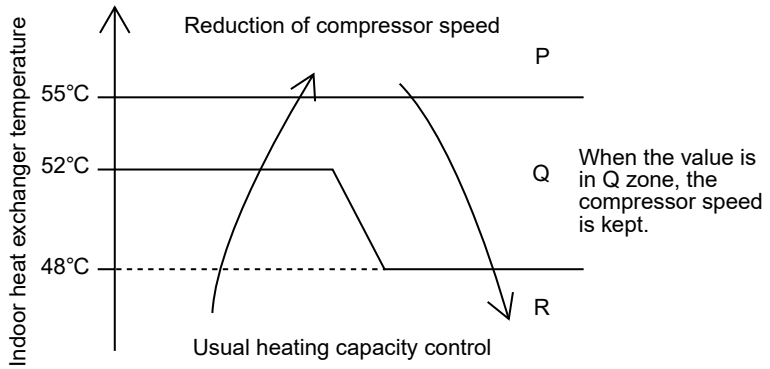 	1) When temperature of the indoor heat exchanger rises in the range from 52°C to 55°C, the compressor speed is kept. (Q zone) When temperature of the indoor heat exchanger drops in the range from 48°C to under 55°C, the compressor speed is kept. (Q zone) 2) When temperature of the indoor heat exchanger rises to 55°C or higher, the compressor speed is reduced. (P zone) 3) When temperature of the indoor heat exchanger does not rise to 52°C, or when it drops below to 48°C, the capacity control operation returns to the usual control in heating operation. (R zone)

Item	Operation flow and applicable data, etc.	Description
7. Defrost control (Only in heating operation)	(This function removes frost adhered to the outdoor heat exchanger.) The temperature sensor of the outdoor heat exchanger (Te sensor) judges the frosting status of the outdoor heat exchanger and the defrost operation is performed with 4-way valve reverse defrost system.	The necessity of defrost operation is detected by the outdoor heat exchanger temperature. The conditions to detect the necessity of defrost operation differ in A, B, or C zone each. (Table 1)

Start of heating operation

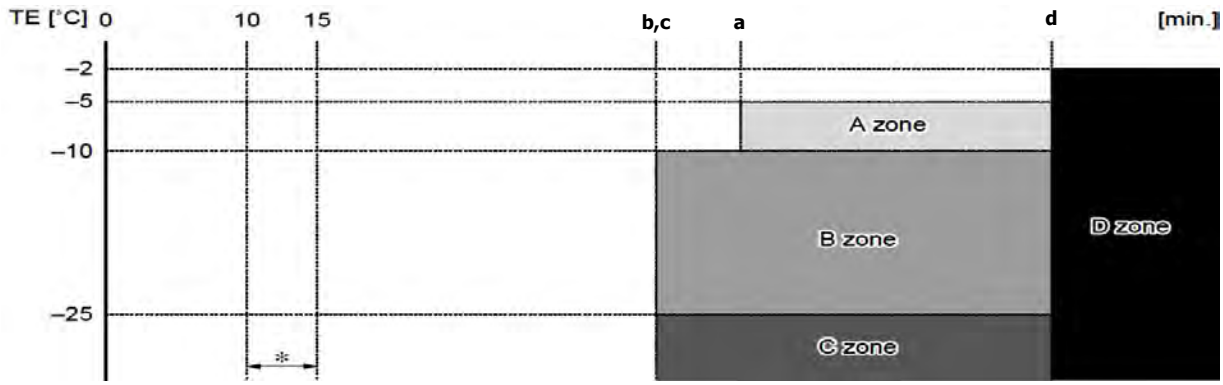

* The minimum TE value and To value between 10 and 15 minutes after heating operation has started are stored in memory as TE0 and TO0, respectively.

Table 1

Defrost zone	In normal To	In abnormal To
A zone	TE0-TE≥3°C & SH-SH0≤2	(TE0-TE)-(TO0-TO)≥3°C & SH-SH0≤2
B zone	TE0-TE≥2°C & SH-SH0≤2	(TE0-TE)-(TO0-TO)≥2°C & SH-SH0≤2
C zone	TE≤ -25°C & SH-SH0≤2	
D zone	More than 90 minutes accumulate heating operation time condition TE≤ -2°C	

Table 2

Heating operation (time)	Model B13E2KVG-E1
a	51
b	49
c	31
d	90

<Defrost operation>

- Defrost operation in A to C zones

1) Stop operation of the compressor for 40 seconds.
2) Invert (OFF) 4-way valve 40 seconds after stop of the compressor.
3) The outdoor fan stops at the same time when the compressor stops.
4) When temperature of the indoor heat exchanger becomes 38°C or lower, stop the indoor fan.

<Finish of defrost operation>

- Returning conditions from defrost operation to heating operation

1) Temperature of outdoor heat exchanger rises to +8°C or higher for 3 seconds.
2) Temperature of outdoor heat exchanger is kept at +7°C or higher for 60 seconds.
3) Defrost operation continues for 10 minutes.

<Returning from defrost operation>

1) Stop operation of the compressor for approx. 40 seconds.
2) Invert (ON) 4-way valve approx. 30 seconds after stop of the compressor.
3) The outdoor fan starts rotating at the same time when the compressor starts.

Item	Operation flow and applicable data, etc.	Description
8. Louver control 1) Louver position	This function controls the air direction of the indoor unit. • The position is automatically controlled according to the operation mode (COOL/HEAT). • The set louver position is stored in memory by the microcomputer, and the louver returns to the stored position when the next operation is performed. (Cooling/Heating memory position) The angle of the louver is indicated as the louver closes fully is 0°. **1) Louver position in cooling operation** **Cooling operation/ AUTO (COOL** Initial setting of "Cooling storage position" Louver : Directs downward (40.9°) **2) Louver position in heating operation** **Heating operation/ AUTO (HEAT)** 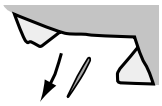 Initial setting of “Heating storage position” Louver : Directs downward (80.5°)	
2) Air direction adjustment	**Air direction** Horizontal blowing → Inclined blowing → Blowing downward → Inclined blowing → Horizontal blowing 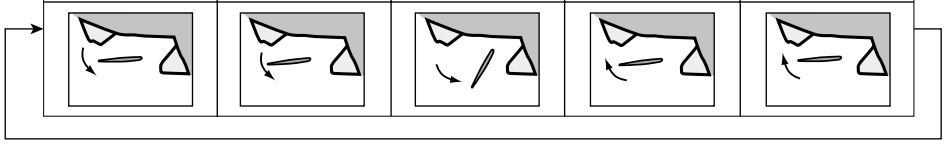	• The louver position can be arbitrarily set up by pressing [FIX] button.
3) Swing	• Swing operation is perfor in range 35° with the Fixed position as the center. • If the swing range exceeded either upper or lower limit position, swing operation is perfomed in range 35° from the limit. 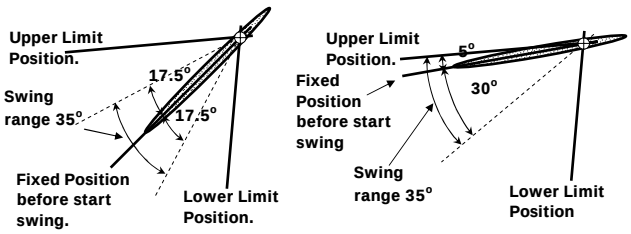 	• Swing When pressing [SWING] button during operation, the louver starts swinging.

Item	Operation flow and applicable data, etc.	Description
9. ECO operation	When pressing [ECO] button on the remote controller, a Economic operation is performed. **<Cooling operation>** This function operates the air conditioner with the difference between the set and the room temperature as shown in the following figure.	**<Cooling operation>** 1) The control target temperature increase 0.5ºC per hour up to 2ºC starting from the set temperature when ECO NO has been received. 2) The indoor fan speed is depend on presetting and can change every speed after setting ECO operation. 3) The compressor speed is controlled as shown in the left figure.

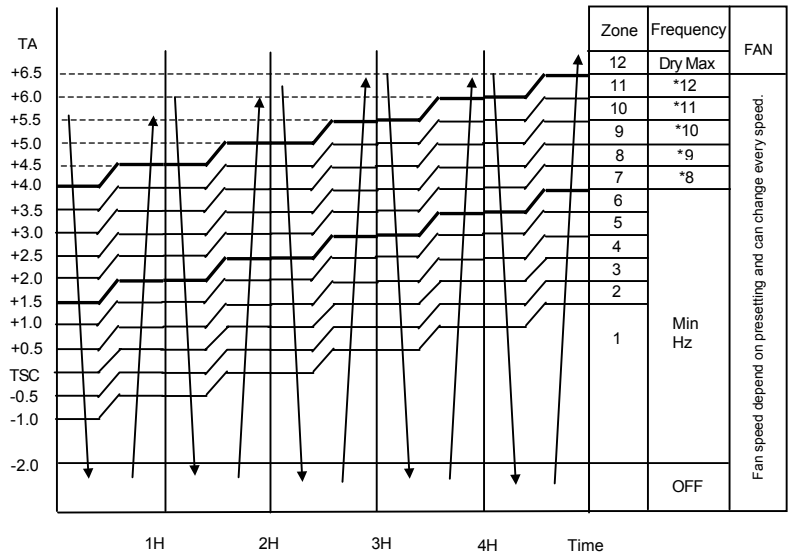

* 12 (DRY max - COOL min) /6 x 5 + COOL min
* 11 (DRY max - COOL min) /6 x 4 + COOL min
* 10 (DRY max - COOL min) /6 x 3 + COOL min
* 9 (DRY max - COOL min) /6 x 2 + COOL min
* 8 (DRY max - COOL min) /6 x 1 + COOL min

Hz	B13E2KVG-E1
Cool min	20
DRY max	35

<Heating operation>

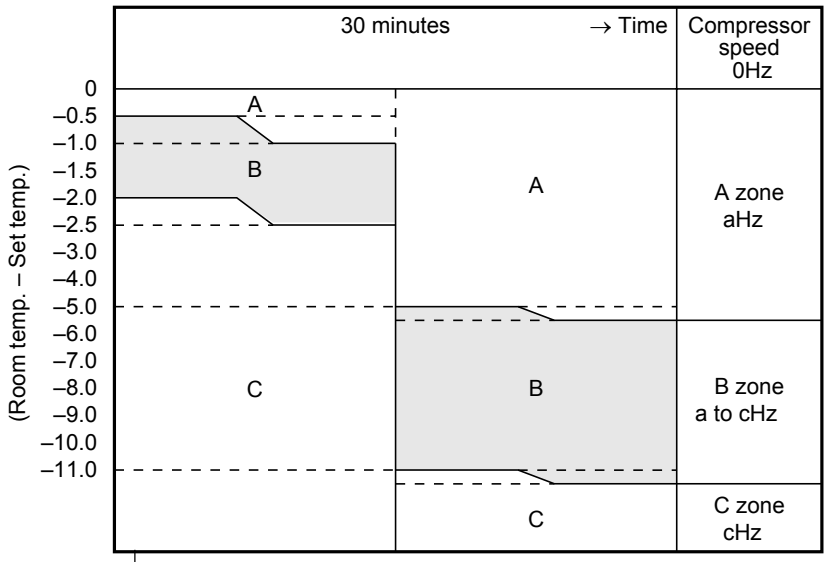

Hz	B13E2KVG-E1
a	20
c	31

<Heating operation>

1) Setting the compressor speed to Max. aHz, the temperature zone in which the operation can be performed with Max. cHz is gradually widened after 30 minutes passed when starting ECO operation.
2) The indoor fan speed is depend on presetting and can change every speed after setting ECO operation.

Item	Operation flow and applicable data, etc.	Description
10. Temporary operation	Pressing [RESET] button starts the temporary operation of [AUTO] operation. When keeping [RESET] button pressed for 10 seconds or more, the temporary [COOL] operation is performed.	1) When pressing [RESET] button, the temporary [AUTO] operation starts. 2) When keeping [RESET] button pressed for 3 seconds or more, Pi, Pi, Pi sound is heard and [AUTO RESTART] control is changed. 3) When keeping [RESET] button pressed for 10 seconds or more, “Pi” sound is heard and the temporary [COOL] operation starts. 4) To stop the temporary operation, press the button again.

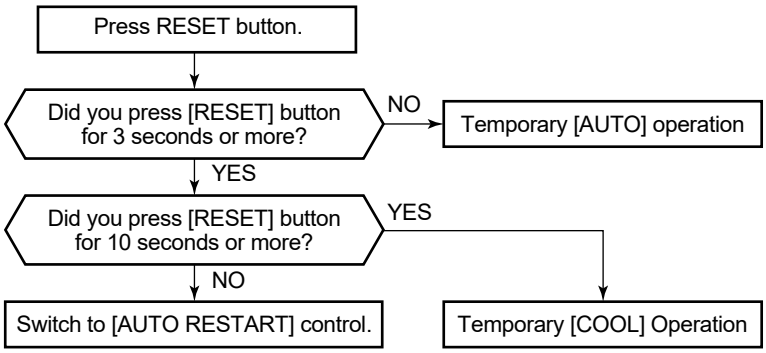

11. Discharge temperature control

Td value	Control operation
117°C	Judges as an error and stops the compressor.
115°C	Reduce the compressor speed.
106°C	Reduce slowly compressor speed.
103°C	Keeps the compressor speed.
96°C	If the operation is performed with lower speed than one commanded by the serial signal, speed is slowly raised up to the commanded speed.
	Operates with speed commanded by the serial signal.

1. Purpose

This function detects error on the refrigerating cycle or error on the compressor, and performs protective control.

2. Operation

- Control of the compressor speed
  The speed control is performed as described in the left table based upon the discharge temperature.

12. High pressure control

Cooling (TE)	Heating (TC)	Control operation
63°C	62°C	Judges as an error and stops the compressor.
63°C	57°C	Reduce the compressor speed.
61°C	55°C	Reduce slowly compressor speed.
59°C	53°C	Keeps the compressor speed.
55°C	49°C	If the operation is performed with lower speed than one commanded by the serial signal, speed is slowly raised up to the commanded speed.
		Operates with speed commanded by the serial signal.

1. Purpose

This function detects error on the refrigerating cycle or error on the compressor, and performs protective control.

2. Operation

Control of the compressor speed The speed control is performed as described in the left table based upon the heat exchanger temperature (TE, TC).

Item	Operation flow and applicable data, etc.	Description
13. Pulse Modulating valve (P.M.V.) control	This function controls throttle amount of the refrigerant in the refrigerating cycle. According to operating status of the air conditioner, this function also controls the open degree of valve with an expansion valve with pulse Modulation.	1) When starting the operation, move the valve once until it fits to the stopper. (Initialize) * In this time, “Click” sound may be heard. 2) Adjust the open degree of valve by super heat amount. (SH control) 3) If the discharge temperature was excessively up, adjust the open degree of valve so that it is in the range of set temperature. (Discharge temp. control) 4) When defrost operation is performed, the open degree of valve is adjusted according to each setup conditions during preparation for defrost and during defrost operation (4-way valve is inversed.). 5) To turn off the compressor while the air conditioner stops by control of the thermostat or by remote controller, adjust the open degree of valve to the setup value before stop of the compressor.

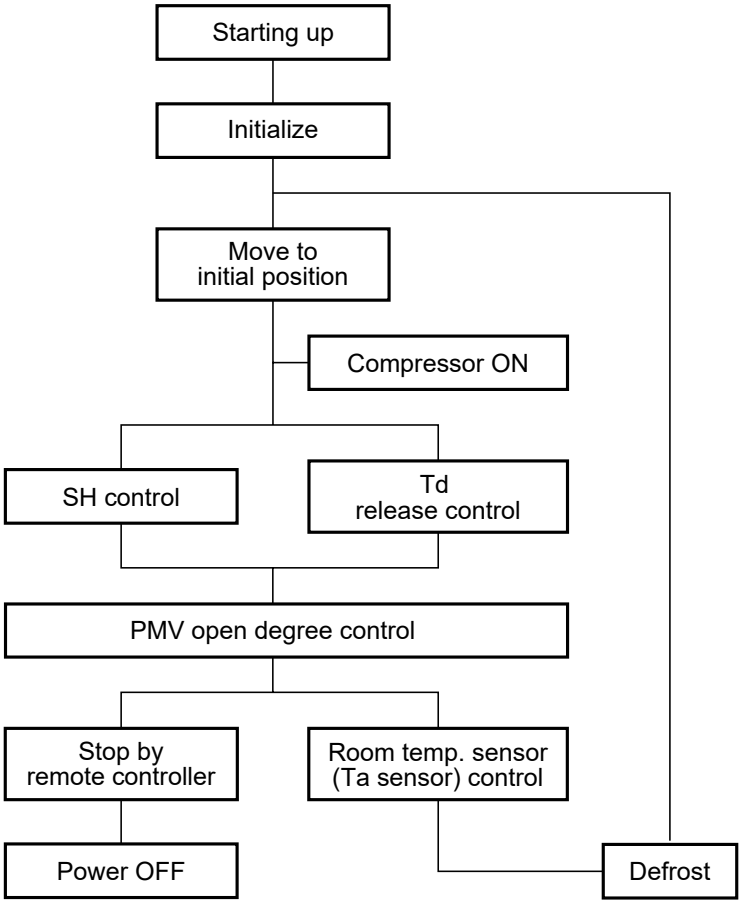

* SH (Super Heat amount) =
  Ts (Temperature of suction pipe of the compressor) –
  Tc or Te (Heat exchanger temperature at evaporation side)
* PMV: Pulse Modulating Valve

Item	Operation flow and applicable data, etc.	Description
14. Self-Cleaning function		**1. Purpose** The Self-Cleaning operation is to minimize the growth of mold, bacteria etc. by running the fan and drying so as to keep the inside of the air conditioner clean. **Self-Cleaning operation** When the cooling or dry operation shuts down, the unit automatically starts the Self-Cleaning operation which is then performed for the specified period based on duration of the operation which was performed prior to the shutdown, after which the Self-Cleaning operation stops. (The Self-Cleaning operation is not performed after a heating operation.) **2. Operation** 1) When the stop signal from the remote controller or timer-off function is received, only the timer indicator light. 2) The period of the Self-Cleaning operation is determined by the duration of the operation performed prior to the reception of the stop code. 3) After the Self-Cleaning operation has been performed for the specified period, the unit stops operating.

Unit now performing cooling or dry operation

↓

Press “STOP” button

↓

Only timer indicator lights, and Self Cleaning operation starts

↓

Time set now elapses

↓

Operation stops

- During Self-Cleaning operations: The louver opens slightly. The indoor fan operates continuously at a speed of 500 rpm.

Self-Cleaning operation times

	Operation time	Self-Cleaning operation time
Cooling: Auto (cooling) Dry	Up to 10 minutes	No Self-Cleaning operation performed (0 minutes)
	10 minutes or longer	30 mins.
Heating: Auto (heating)	No Self-Cleaning operation performed	
Auto (fan only)		
Shutdown		

- To stop an ongoing Self-Cleaning operation at any time
  Press the start/stop button on the remote controller twice during the Self-Cleaning operation. (After pressing the button for the first time, press it for the second time without delay (within 10 minutes).)

Item	Operation flow and applicable data, etc.	Description
14. Self-Cleaning function		

14-1-1. Self-Cleaning diagram

Operation display	ON	OFF	OFF
FCU fan	ON rpm is depend on presetting.	ON (500RPM)	OFF
FCU louver	OPEN	OPEN (12.7º)	CLOSE
Timer display	ON or OFF depend on presetting of timer function.	ON	ON or OFF depend on presetting of timer function.
Compressor	ON or OFF depend on presetting per room temperature.	OFF	OFF
CDU fan	ON or OFF depend on presetting per room temperature.	OFF	OFF

Operation time

Cool mode or dry mode operation more than 10 mins.

Self-Cleaning mode operate 30 mins.

Turn off by remote controller or timer-off function.

Automatically turn-off.

14-1-2. Self-Cleaning function release

How to set/cancel Self-Cleaning function

To set/cancel the Self-Cleaning function, proceed as follows:

- Setting diagnosis code "06" on remote controlle (See detail of setting diagnosis code in 11-4-1)
- Turn on the power supply to air conditioner, after that press [RESET] button on air conditioner 1 time to turn on the air conditioner (The LED display will show in operation LED) ①
- Take the remote controller to direction of LED display on air conditioner, press button "up" (see detail of setting diagnosis code in 11-4-1) 1 time to send the code "07"
  (within 3 sec. after press [RESET] button), then air conditioner will shutdown automatically. Also, LED display will show flash follow the able below.

Self-cleaning function	Operation LED	Timer LED
ON	Flash 1 Hz	None
OFF	Flash 1 Hz	Flash 1 Hz

Note) Table above will show current status of Self-Cleaning function

- Set or Cancel Self-Cleaning function by push the RESET button on air conditioner.
  When setting is changed, the sound warning will alarm "Beep". The setting is changed following below.

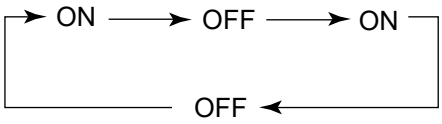

- Turn on air conditioner again by remote controller to confirm setting.

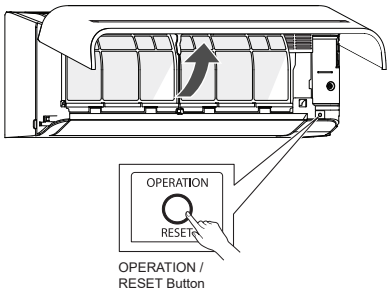

①

Item	Operation flow and applicable data, etc.	Description
15. Remote-A or B selection	**Setting the remote controller** To separate using of remote control for each indoor unit in case of 2 air conditioner are installed nearly. **Remote Control B Setup.** 1) Press [RESET] button on the indoor unit to turn the air conditioner ON. 2) Point the remote control at the indoor unit. 3) Push and hold [CHECK] button on the Remote Control by the tip of the pencil. "00" will be shown shown on the display (Picture①). 4) Press [MODE] during pushing [CHECK]."B" will show on the display and "00" will disappear and the air conditioner will turn OFF. The Remote Control B is memorized (Picture②). Note : 1. Repeat above step to reset Remote Control to be A. 2. Remote Control A has not "A" display. 3. Default setting of Remote Control from factory is A. ① 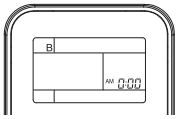 ②	**1. Purpose** This operation is to operate only one indoor unit using one remote controller. **2. Description** When operating one indoor unit in a situation where two indoor units have been installed in the same room or nearby rooms, this operation prevents the remote controller signal from being received simultaneously by both units, thus preventing both units from operating. **3. Operation** The indoor unit on which the remote controller selection has been set to B receives the signal of the remote controller also set to B. (At the factory the remote controller selection is set to A on all the indoor units. There is no A setting display.)
16. Hi POWER Mode	**([Hi POWER] button on the remote controller is pressed)** When [Hi POWER] button is pressed while the indoor unit is in Auto, Cooling or Heating operation, Hi POWER mark is indicated on the display of the remote controller and the unit operates as follows. **1. Automatic operation** • The indoor unit operates in according to the current operation. **2. Cooling operation** • The preset temperature drops 1ºC (The value of the preset temperature on the remote controller does not change.) The indoor unit's fan speed level increase 1 tap **3. Heating operation** • The preset temperature increases 2ºC (The value of the preset temperature on the remote controller does not change.) The indoor unit's fan speed level increase 1 tap **4. The Hi POWER mode can not be set in Dry operation**	

Item	Operation flow and applicable data,etc	Description
17. Silent Operation	Silent button on remote controller is pressed. **Silent 1:** Cooling/heating capacity is limited maximum for 70% of rated. Only compressor speed is limited. **Silent 2:** CDU sound level is limited for lowest CDU sound level. Compressor and CDU fan speed are limited.	This function is used when the user need to keep silent at outdoor side. It is limit maximum compressor speed and CDU fan speed. Sound level can be implemented by 2 silent level. **Sound level:** Rated level > Silent 1 > Silent 2 **Note:** Due to Silent operation reason, In adequate cooling/heating capacity may occur.

Silent Operation description

Model	Silent Operation	Cooling		Heating	
		Compressaor frequncy (rps)	CDU Fan speed (rpm)	Compressaor frequncy (rps)	CDU Fan speed (rpm)
RAS-13E2AVG-E	Silent1	49	Max 950	57	Max 950
	Silent2	28	720	37	720

Silent Operation (Outdoor Unit)

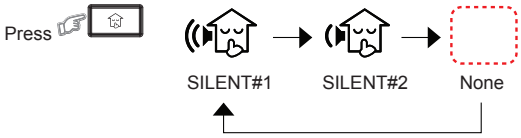

18. 8°C heating / Frost protective operation	8°C Button on remote controller is pressed. Set temperature is performed for 5°C to 13°C and no cold draft prevention control. **8°C heating operation** 	Intended for cold latitudes and performs objective heating operation.

<table>
<tr><th>Item</th><th>Operation flow and applicable data,etc</th><th>Description</th></tr>
<tr>
<td>19. QUIET mode</td>
<td>When the "Quiet mode" selected from [QUIET] button;
- The fan of the indoor unit will be restricted the revolving speed at speed UL.
- The compressor speed is controlled as shown in the figure.
<table>
<tr><th>Model</th><th>13l</th></tr>
<tr><td>Cool min (Hz)</td><td>20</td></tr>
<tr><td>Quiet Cool (Hz)</td><td>35</td></tr>
<tr><td>Heat min (Hz)</td><td>20</td></tr>
<tr><td>Quiet Heat (Hz)</td><td>31</td></tr>
</table>
The " Quiet mode " is canceled by [QUIET] button is pressed to select other speed.</td>
<td>Quiet mode is the system which, control the revolving speed of indoor fan to work constantly at lower than speed L. In addition, noise level of indoor unit is less than usual.

Remarks :
1. Quiet mode is unable to work in dry mode.
2. Quiet mode is appropriate to work with less cooling load and less heating load condition. Because of the fan speed L- may cause not enough the cooling capacity or heating capacity.</td>
</tr>
<tr>
<td>20. Display lamp brightness adjustment</td>
<td>To decrease the display lamp brightness or turn it off.
1. Press and hold FAN for 3 seconds until brightness level (d0, d1, d2 or d3) is shown on remote control LCD then release the button.
2. Press TEMP. Rise or TEMP. Decrease to adjust brightness in 4 levels.
<table>
<tr><th>Remote control LCD</th><th>Operation display</th><th>Brightness</th></tr>
<tr><td>d3</td><td>Lamp illuminates full brightness.</td><td>100%</td></tr>
<tr><td>d2</td><td>Lamp illuminates 50% brightness.</td><td>50%</td></tr>
<tr><td>d1</td><td>Lamp illuminates 50% brightness and the operation lamp is turned off.</td><td>50%</td></tr>
<tr><td>d0</td><td>All lamps are turned off.</td><td>All turned off</td></tr>
</table>
● In the examples of d1 and d0, the lamp illuminates for 5 seconds before going off.</td>
</tr>
</table>

Item	Operation flow and applicable data, etc.	Description
21. COMFORT SLEEP mode	**Cooling mode** • The preset temperature will increase as show on ECO operation (Item No. 9) • Press the [COMFORT SLEEP] button to choose the operating hours. Repeat pressing to select the hours. (1hr, 3hr, 5hr or 9hr) • If the [COMFORT SLEEP] button is pressed again means cancel comfort sleep mode. **Heating mode** • The preset temperature will drop down as show on ECO operation (Item No. 9) • Press the [COMFORT SLEEP] button to choose the operating hours. Repeat pressing to setect thehours. (1hr, 3hr, 5hr or 9 hr) • If the [COMFORT SLEEP] button is pressed again means cancel comfort sleep mode.	The principles of comfort sleep mode are: • Quietness for more comfortable. When room temperature reach setting temperature • Save energy by changing room temperature automatically. • The air condition can shut down by itself automatically. Remarks: 1. Comfort sleep mode will not operate in dry mode and fan only mode.
22. Operation mode select table	Operating system setting • Do cut J804 for cooling only system • Do cut J805 for heating only system • Do cut both of J804 and J805 for return to factory default.	1. Purpose Choosing the operating system as appropriate in real condition 2. Operation Factory default setting prefer "Heat pump" system. Through it is able to cooling only system heating only system or return to factory default.

Item	Operation flow and applicable data, etc.	Description
23. Short Timer	In the normal condition, after switching one circuit breaker, 3-minute delay time for compressor and 1 hour for plasma air purifier are set for the maintenance of the unit. 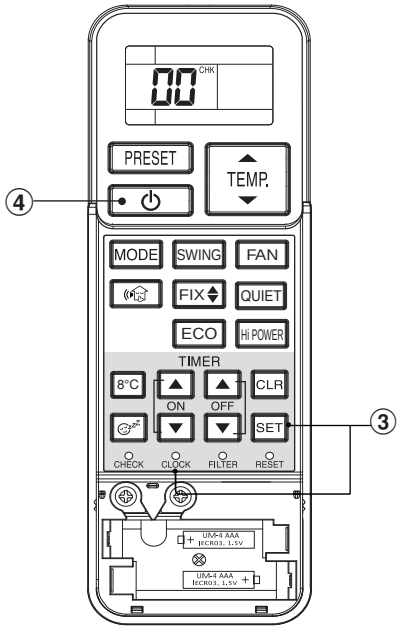 	**Purpose** To start the unit immediately for the purpose of testing, trial...etc, short timer can be used. maintenance of the unit. **Short Timer Setting** ① Press [⏻] button to turn the unit OFF. ② Set the operation mode or plasma air purifier on the remote control without sending the signal to the unit. ③ Use the tip of the pencil to push the [CHK] button and hold, "00" will show on display, them press [SET] button to make "00" disappear. ④ Press [⏻] button to turn the unit ON. ⑤ When short timer is activated, all setting on the remote operates immediately, besides, all indicatiors on front panel turns ON continuously for 3 seconds.

9-3. Auto Restart Function

This indoor unit is equipped with an automatic restarting function which allows the unit to restart operating with the set operating conditions in the event of a power supply being accidentally shut down.
The operation will resume without warning three minutes after power is restored.

This function is set to work when shipped from the factory.

9-3-1. How to Cancel the Auto Restart Function

To cancel auto restart function, proceed as follows :

Repeat the setting procedure : the unit receives the signal and beeps three times.

The unit will be required to be turned on with the remote controller after the main power supply is turned off.

- **When the unit is standby (Not operating)**

Operation	Motions
Press [RESET] button for more than three seconds. (Less than 10 seconds) 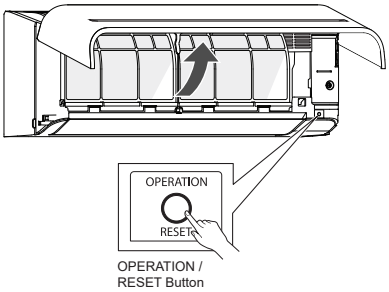 	The unit is on standby. ↓ The unit starts to operate. The white indicator is on. ↓ After approx. three seconds, The unit beeps three times and continues to operate. **The white indicator flashes for 5 seconds.** If the unit is not required to operate at this time, press [RESET] button once more or use the remote controller to turn it off.

- **When the unit is in operation**

Operation	Motions
Press [RESET] button for more than three seconds. (Less than 10 seconds) 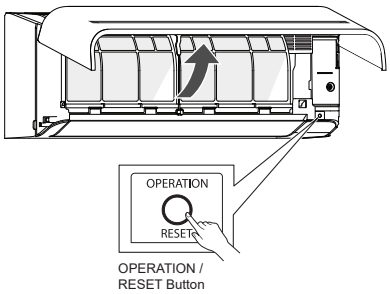 	The unit is in operation. The white indicator is on. ↓ The unit stops operating. The white indicator is turned off. ↓ After approx. three seconds, The unit beeps three times. **The white indicator flashes for 5 seconds.** If the unit is required to operate at this time, press [RESET] button once more or use the remote controller to turn it on.

9-3-2. How to Set the Auto Restart Function

To set the auto restart function, proceed as follows:

The power supply to the unit must be on ; the function will not set if the power is off.

Press the [RESET] button located in the center of the front panel continuously for three seconds.

The unit receives the signal and beeps three times.

The unit then restarts operating automatically in the event of power supply being accidentally shut down.

- **When the system is on stand-by (not operating)**

Operation	Motions
Press [RESET] button for more than three seconds. (Less than 10 seconds) 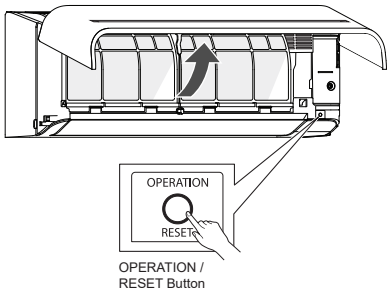 	The unit is on standby. ↓ The unit starts to operate. The white indicator is on. ↓ After approx. three seconds, The unit beeps three times and continues to operate. If the unit is not required to operate at this time, press [RESET] button once more or use the remote controller to turn it off.

- **When the system is operating**

Operation	Motions
Press [RESET] button for more than three seconds. (Less than 10 seconds) 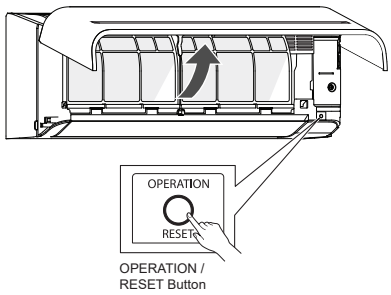 	The unit is in operation. The white indicator is on. ↓ The unit stops operating. The white indicator is turned off. ↓ After approx. three seconds, The unit beeps three times. If the unit is required to operate at this time, press [RESET] button once more or use the remote controller to turn it on.

9-3-3. Power Failure During Timer Operation

When the unit is turned off because of power failure during timer operation, the timer operation is canceled. In that case, set the timer operation again.

NOTE :

The Daily Timer is reset while a command signal can be received from the remote controller even if it stopped due to a power failure.

9-4. Remote control

9-4-1. Parts Name of Remote Controller

① Infrared signal emitter
② Start/Stop button (⏻)
③ Mode select button (MODE)
④ Temperature button (TEMP.)
⑤ Fan speed button (FAN)
⑥ Swing louver button (SWING)
⑦ Set louver button (FIX)
⑧ 8°C Heating Operation (8°C)
⑨ On timer button (ON ▲ ▼)
⑩ Off timer button (OFF ▲ ▼)
⑪ Setup button (SET)
⑫ Clear button (CLR)
⑬ Memory and Preset button (PRESET)
⑭ Silent operation button ( )
⑮ High power button (Hi POWER)
⑯ Eco button (ECO)
⑰ Quiet button (QUIET)
⑱ Comfort sleep button ( )
⑲ Filter reset button (FILTER)
⑳ Set clock button (CLOCK)
㉑ Check button (CHECK)
㉒ Reset button (RESET)

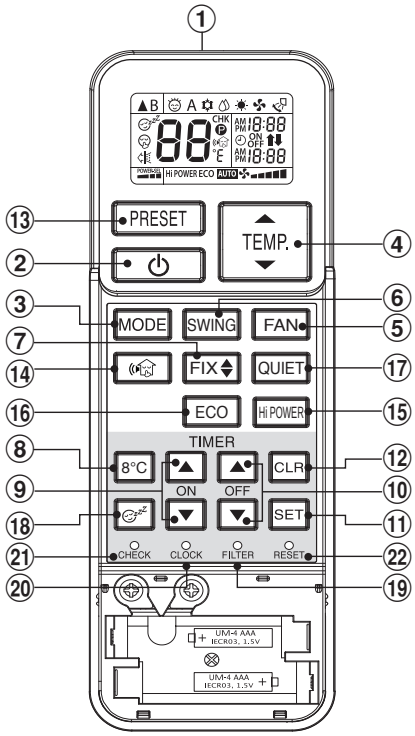

Note:

- The provided Remote Controller is a wireless type, which also can be used as a wire.
  Please see “How to Connect The Remote Controller for Wired Operation", located in installation instruction, in case of wired control is required.
- In wire operation, remote controller will return to initial condition (PRESET, TIMER and CLOCK will return to initial condition) when user shutdown power supply of Air conditioner.

9-4-2. Operation of remote control

1. AUTOMATIC OPERATION

To automatically select cooling or fan only operation.

1. Press MODE : Select Auto A.
2. Press TEMP. : Set the desired temperature. Min 17°C, Max 30°C.
3. Press FAN : Select AUTO, LOW, LOW+, MED, MED+, or HIGH.

2. COOLING / HEATING / FAN ONLY OPERATION

1. Press MODE : Select Cool, Heat or Fan only.
2. Press TEMP. : Set the desired temperature.
   Min 17°C, Max 30°C, Fan Only: No temperature indication
3. Press FAN : Select AUTO, LOW, LOW+, MED, MED+, or HIGH.

3. DRY OPERATION

For dehumidification, a moderate cooling performance is controlled automatically.

1. Press MODE : Select Dry.
2. Press TEMP. : Set the desired temperature. Min 17°C, Max 30°C.

Note: Dry mode fan speed is set to Auto only.

4. Hi-POWER OPERATION

To automatically control room temperature and airflow for faster cooling or heating operation (except in DRY and FAN ONLY mode)

Press [Hi POWER] : Start and stop the operation.

5. ECO OPERATION

To automatically control room temperature to save energy (except in DRY and FAN ONLY mode)

Press [ECO] : Start and stop the operation.

Note: Cooling operation; the set temperature will increase automatically 1 degree/hour for 2 hours (maximum 2 degrees increase).
For heating operation the set temperature will decrease.

6. TEMPORARY OPERATION

In case of the misplaced or discharged remote control

- Pressing the RESET button, the unit can start or stop without using the remote control.
- Operation mode is set on AUTOMATIC operation, preset temperature is 24°C and fan operation is automatic speed.

7. TIMER OPERATION

	Setting the ON Timer	Setting the OFF Timer
1	Press [▲ ON ▼] : Set the desired ON timer.	Press [▲ OFF ▼] : Set the desired OFF timer.
2	Press [SET] : Set the timer	Press [SET] : Set the timer.
3	Press [CLR] : Cancel the timer	Press [CLR]

Daily timer allows the user to set both the ON & OFF timers and will be activated on a daily basis.

Setting Daily Timer

1	Press [▲ ON ▼] : Set the ON timer.	3	Press [SET].
2	Press [▲ OFF ▼] : Set the OFF timer.	4	Press [SET] button during the (⬆ or ⬇) mark flashing.

- During the daily timer is activation, both arrows (⬆ or ⬇) are indicated.

Note:

- Keep the remote control in accessible transmission to the indoor unit; otherwise, the time lag of up to 15 minutes will occur.
- The setting will be saved for the next same operation.

8. PRESET OPERATION

Set your preferred operation for future use. The setting will be memorized by the unit for future operation (except air flow direction).

1. Select your preferred operation.
2. Press and hold [PRESET] for 3 seconds to memorize the setting. The Ⓟ mark displays.
3. Press [PRESET] : Operate the preset operation.

9. AUTO RESTART FUNCTION SETTING

This product is designed so that, after a power failure, it can restart automatically in the same operating mode as before the power failure.

Information

The product is shipped with Auto Restart function in the ON position. Turn it OFF if this function is not required.

How to turn OFF the Auto Restart Function

Press and hold the [OPERATION] button on the indoor unit for 3 seconds (3 beep sounds but OPERATION lamp does not blink).

How to turn ON the Auto Restart Function

Press and hold the [OPERATION] button on the indoor unit for 3 seconds (3 beep sounds and OPERATION lamp blink 5 time/sec for 5 seconds).

Note: In case of ON timer or OFF timer are set, AUTO RESTART OPERATION does not activate.

10. QUIET OPERATION

Press [QUIET]: Start and stop the operation.

Note: Under certain conditions, QUIET operation may not provide adequate cooling due to low sound features.

11. COMFORT SLEEP OPERATION

To save energy while sleeping, automatically control air flow and automatically turn OFF.

Press [COMFORT SLEEP] : Select 1, 3, 5 or 9 hrs for OFF timer operation.

Note: The cooling operation, the set temperature will increase automatically 1 degree/hour for 2 hours (maximum 2 degrees increase). For heating operation, the set temperature will decrease.

12. 8°C HEATING OPERATION

1. Press [8°C] operation button to change to 8°C set temperature heating operation.
2. Press [TEMP.] to adjust setting temperature from 5°C to 13°C.

Note: 8°C will operate in Heating mode only. If Air conditioner performs in cooling operation (including automatic cooling) or dry operation it will change to heating operating.

13. SILENT OPERATION

SILENT OPERATION ( )

Keep outdoor unit operating silently to ensure either yourself or neighborhood will have a tight sleep in nighttime. By this feature, the heating capacity will be optimized to deliver such silent experience.
The silent operation can be selected from one of two purposes (Silent 1 and Silent 2).

There are three setting parameters: Standard level > Silent 1 > Silent 2

Silent 1:

Though operating silently, the Heating (or Cooling) capacity is still prioritized to ensure having sufficient comfort inside the room.

This setting is a perfect balance between the Heating (or Cooling) capacity and the Sound level of outdoor unit.

Silent 2:

Compromising the Heating (or Cooling) capacity to the Sound level in any circumstance where the outdoor unit's sound level is highly prioritized.

This setting has a purpose to reduce the maximum sound level of outdoor unit by 4 dB(A).

Note:

- While activating of Silent operation, inadequate heating (or cooling) capacity may occur.

Silent Operation (Outdoor Unit)

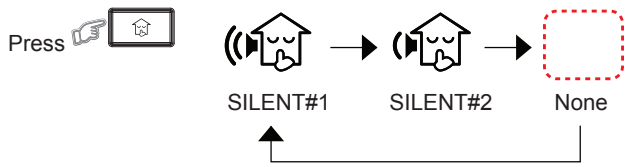

14. MANUAL DEFORST OPERATION

To defrosting the heat exchanger of the outdoor unit during Heating operation.

Press and hold SET : for 5 sec. then remote control display will show [dF] as picture ① for 2 sec.

①

9-4-3. Name and Functions of Indications on Remote Controller

All indications, except for the clock time indicator, are displayed by pressing the ⏻ button.

1. Transmission mark
This transmission mark ▲ indicates when the remote controller transmits signals to the indoor unit.

2. Mode indicator
Indicates the current operation mode.
(A : Auto, ☼: Cool, 💧 : Dry, ☀ : Heat
✇ : Fan only)

3. Temperature indicator
Indicates the temperature setting.
(17°C to 30°C)

4. FAN speed indicator
Indicates the selected fan speed.
AUTO or five fan speed levels
(LOW ▁ , LOW+ ▁▁ , MED ▁▁▁ , MED+ ▁▁▁▁ ,
HIGH ▁▁▁▁▁) can be shown.
In Dry mode (💧) fan speed is AUTO only.

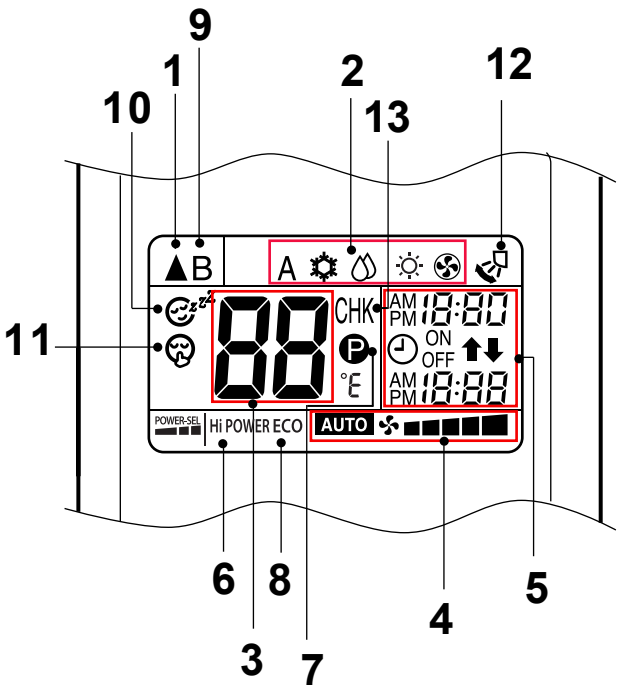

5. TIMER and clock time indicator
The time setting for timer operation or the clock time is indicated.
The current time is always indicated except during TIMER operation.

6. Hi-POWER indicator
Indicates when the Hi-POWER operation starts.
Press the Hi-POWER button to start and press it again to stop the operation.

7. Ⓟ (PRESET) indicator
Flashes for 3 seconds when the PRESET button is pressed during operation.
The Ⓟ mark is shown when holding down the button for more than 3 seconds while the mark is blinks.
Press another button to turn off the mark.

8. ECO indicator
Indicates when the ECO is in activated.
Press the ECO button to start and press it again to stop operation.

9. A, B change indicator remote controller When the remote controller switching function is set, “B” appears in the remote controller display.(When the remote controller setting is “A”, there is no indication at this position.)

10. Comfort sleep
Indicates when comfort sleep is activaled.
Press comfort sleep button to selectter

11. Quiet
Indicates when quiet is activated.
Press quiet button to start and press it again to stop operation.

12. Swing
Indicates when louver is swing.
Press swing button to start the swing operation and press it again to stop the swing operation.

13. Service Mode indicator
Shows during enter service Mode.

10. INSTALLATION PROCEDURE

10-1. Installation Diagram of Indoor and Outdoor Units

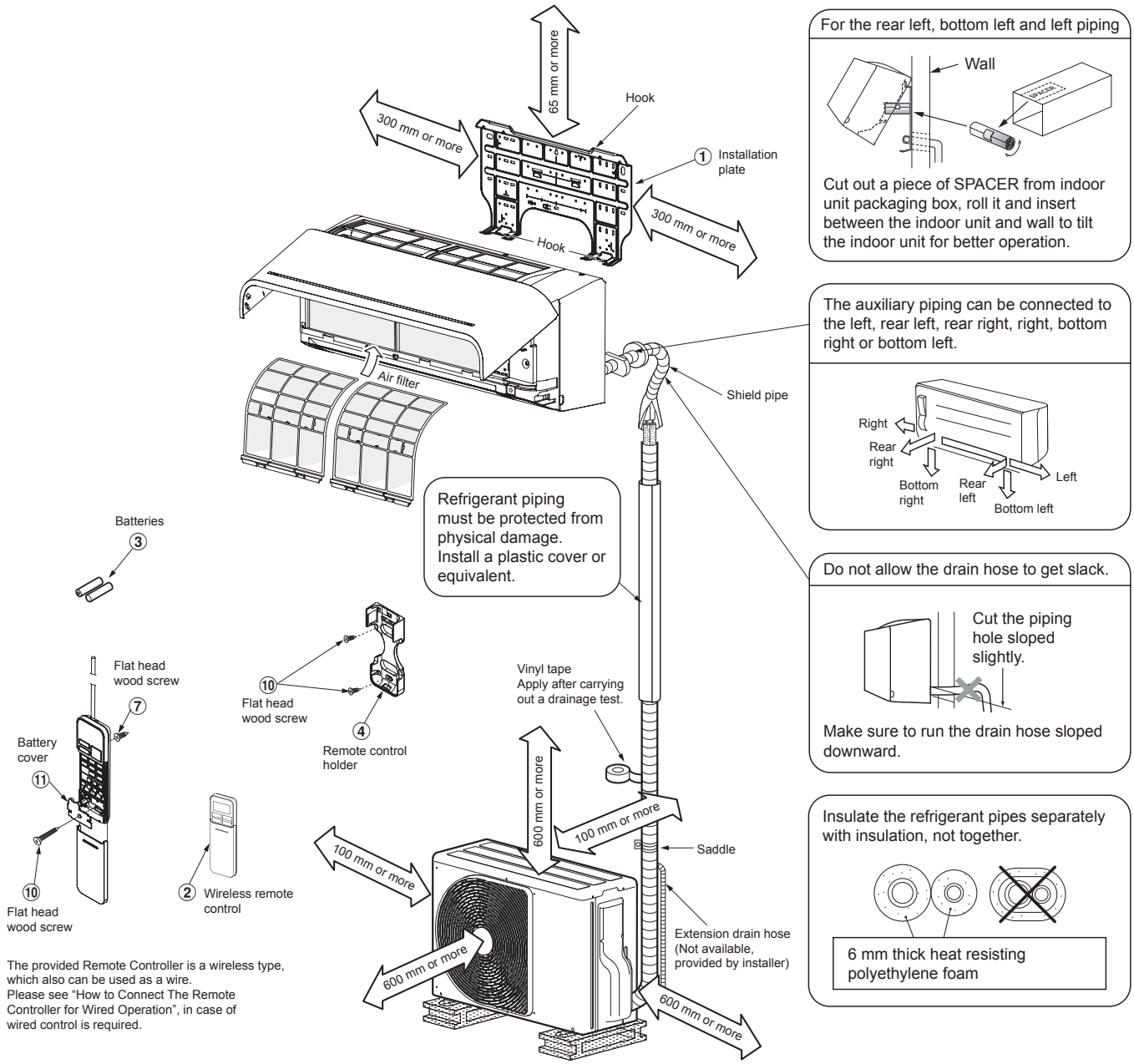

Before installing the wireless remote controller

- Loading Batteries
  1. Remove the battery cover.
  2. Insert 2 new batteries (AAA type) following the (+) and (–) positions.

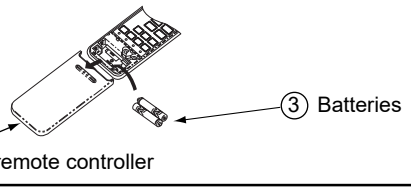

10-2. Installation

10-2-1. Optional installation parts

Part code	Parts name	Q'ty
Ⓐ	Refrigerant piping Liquid side : Ø6.35 mm Gas side : Ø9.52 mm	One each
Ⓑ	Pipe insulating material (polyethylene foam, 6 mm thick)	1
Ⓒ	Putty, PVC tapes	One each

<Fixing bolt arrangement of outdoor unit>

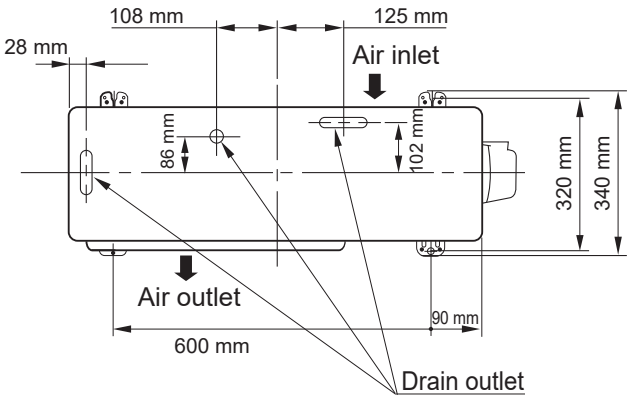

Fig. 10-2-1

- Secure the outdoor unit with fixing bolts and nuts if the unit is likely to be exposed to a strong wind.
- Use ∅8 mm or ∅10 mm anchor bolts and nuts.
- If it is necessary to drain the defrost water, attach drain nipple ⑬ and cap waterproof ⑭ to the bottom plate of the outdoor unit before installing it.

10-2-2. Accessory and installation parts

Indoor Unit			
No.	**Part name**	**No.**	**Part name**
①	Installation plate × 1	②	Wireless remote control × 1
③	Battery × 2	④	Remote control holder × 1
⑤	Ultra Fresh filter × 1	⑥	Mounting screw × 6
⑦	Flat head wood screw × 2	⑧	Owner's Manual × 1
⑨	Installation Manual × 1	⑩	Flat head wood screw × 1
⑪	Battery cover	⑫	B Label × 1

Outdoor Unit			
No.	**Part name**	**No.**	**Part name**
⑬	Drain nipple × 1	⑭	Cap water proof × 2*

Air filters
Clean every 2 weeks.
1. Open the air inlet grille.
2. Remove the filters if they are on the air filter.
3. Vacuum or wash and then dry them.
4. Reinstall the filters and close the air inlet grille.

Ultra Fresh filter
Maintaining your strong purifying and revitalizing filter.
Clean every 6 months or when dust covers the filter.
1. Shake and blow with normal air or
2. Rinse the filter in water and dry it in under sunlight or in air.
   (Do not wash or rinse with high pressure water)
3. Replace every 3 years or sooner. (P/N: RB-A701FE)

Note: Filter life depends on the level of impurities in your operating environment.
Higher levels of impurities may require more frequent cleaning and replacement.
In all cases, we recommend an additional set of filters to improve the purifying and deodorizing performance of your air conditioner.

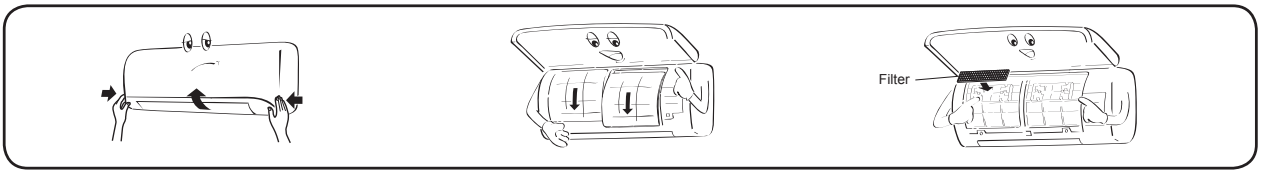

10-2-3. Installation/Servicing Tools

Changes in the product and components

In the case of an air conditioner using R32, in order to prevent any other refrigerant from being charged accidentally, the service port diameter of the outdoor unit control valve (3 way valve) has been changed. (1/2 UNF 20 threads per inch)

- In order to increase the pressure resisting strength of the refrigerant piping flare processing diameter and size of opposite side of flare nuts has been changed. (for copper pipes with nominal dimensions 1/2 and 5/8)

New tools for R32(R410A)

New tools for R32(R410A)	Applicable to R22 model		Changes
Gauge manifold	×		As pressure is high, it is impossible to measure by means of conventional gauge. In order to prevent any other refrigerant from being charged, each port diameter has been changed.
Charge hose	×		In order to increase pressure resisting strength, hose materials and port size have been changed (to 1/2 UNF 20 threads per inch). When purchasing a charge hose, be sure to confirm the port size.
Electronic balance for refrigerant charging	○		As pressure is high and gasification speed is fast, it is difficult to read the indicated value by means of charging cylinder, as air bubbles occur.
Torque wrench (nominal diam. 1/2, 5/8)	×		The size of opposite sides of flare nuts have been increased. Incidentally, a common wrench is used for nominal diameters 1/4 and 3/8.
Flare tool (clutch type)	○		By increasing the clamp bar's receiving hole, strength of spring in the tool has been improved.
Gauge for projection adjustment	–	—	Used when flare is made by using conventional flare tool.
Vacuum pump adapter	○		Connected to conventional vacuum pump. It is necessary to use an adapter to prevent vacuum pump oil from flowing back to the charge hose. The charge hose connecting part has two ports-one for conventional refrigerant (7/16 UNF 20 threads per inch) and one for R32(R410A). If the vacuum pump oil (mineral) mixes with R32(R410A) a sludge may occur and damage the equipment.
Gas leakage detector	×		Exclusive for HFC refrigerant.

- Incidentally, the "refrigerant cylinder" comes with the refrigerant designation R32(R410A) and protector coating in the U.S's ARI specified rose color (ARI color code: PMS 507).
- Also, the "charge port and packing for refrigerant cylinder" require 1/2 UNF 20 threads per inch corresponding to the charge hose's port size.

10-3. Indoor Unit

10-3-1. Installation place

- A place which provides the spaces around the indoor unit as shown in the diagram
- A place where there are no obstacles near the air inlet and outlet
- A place which allows easy installation of the piping to the outdoor unit
- A place which allows the front panel to be opened
- The indoor unit shall be installed at least 2.5 m height. Also, it must avoided to put anything on the top of the indoor unit.

CAUTION

- Direct sunlight to the indoor unit's wireless receiver should be avoided.
- The microprocessor in the indoor unit should not be too close to RF noise sources. (For details, see the owner's manual.)

<Remote control>

- A place where there are no obstacles such as a curtain that may block the signal from the indoor unit.
- Do not install the remote control in a place exposed to direct sunlight or close to a heating source, such as a stove.
- Keep the remote control at least 1 m apart from the nearest TV set or stereo equipment. (This is necessary to prevent image disturbances or noise interference.)
- The location of the remote control should be determined as shown below.

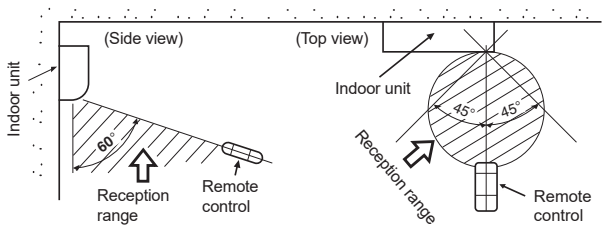

Fig. 10-3-1

10-3-2. Cutting a hole and mounting installation

<Cutting a hole>

When installing the refrigerant pipes from the rear.

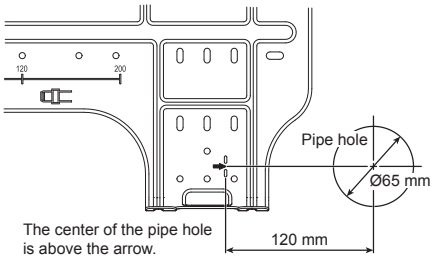

Fig. 10-3-2

1. After determining the pipe hole position on the mounting plate (➡), drill the pipe hole (∅65 mm) at a slight downward slant to the outdoor side.

NOTE

- When drilling a wall that contains a metal lath, wire lath or metal plate, be sure to use a pipe hole brim ring sold separately.

<Mounting the installation plate>

(Unit : mm)

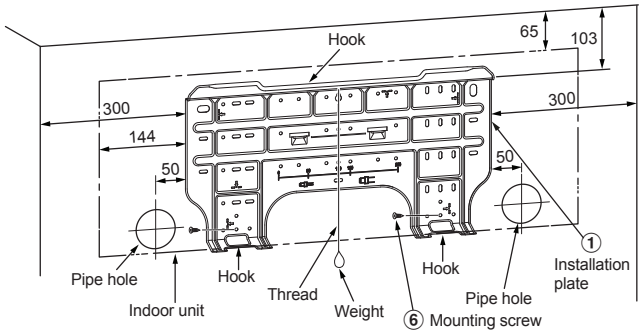

Fig. 10-3-3

- Space allows for moving range of the air inlet grille and horizontal louver in operation above curtain rails, window cornice or other objects.

(Unit : mm)

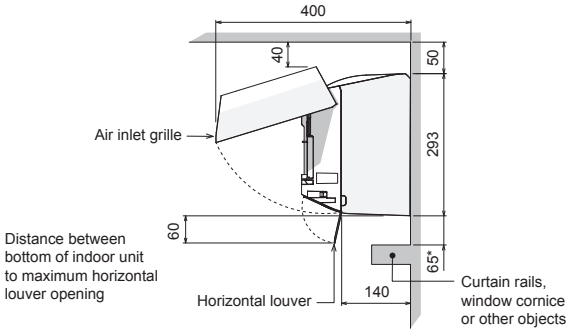

Fig. 10-3-4

CAUTION

- If have curtain rails, window cornice or other objects, allow space from the indoor unit should be 65 mm or more.
- If allow space is less than 65 mm, this can affect the opening and closing of the air inlet grille and the horizontal louver.
- However, there should be no objects in the air outlet position. It will block the air flow direction and drop performance.

<When the installation plate is directly mounted on the wall>

1. Securely fit the installation plate onto the wall by screwing it in the upper and lower parts to hook up the indoor unit.
2. To mount the installation plate on a concrete wall with anchor bolts, utilize the anchor bolt holes as illustrated in the above figure.
3. Install the installation plate horizontally in the wall.

CAUTION

When installing the installation plate with a mounting screw, do not use the anchor bolt hole. Otherwise the unit may fall down and result in personal injury and property damage.

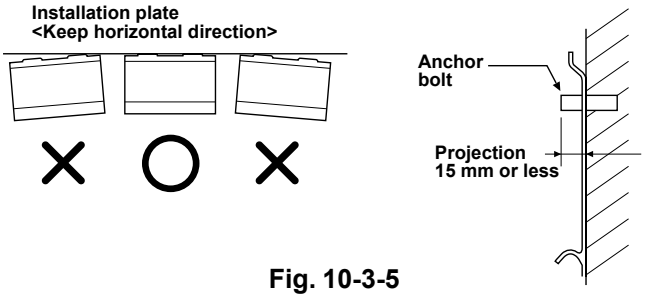

Fig. 10-3-5

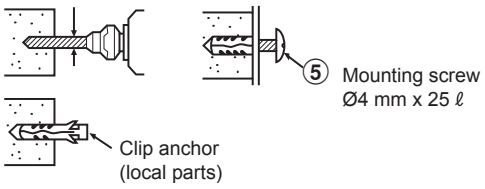

Fig. 10-3-6

CAUTION

Failure to firmly install the unit may result in personal injury and property damage if the unit falls.

- In case of block, brick, concrete or similar type walls, make 5 mm dia. holes in the wall.
- Insert clip anchors for appropriate mounting ⑤ screws.

NOTE:

- Secure four corners and lower parts of the installation plate with 4 to 6 mounting screws to install it.

10-3-3. How to Connect Remote Controller for Wire Operation

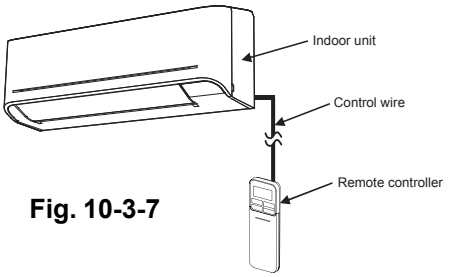

Fig. 10-3-7

< For indoor unit >

1. Securely remove two screws at the front panel.
   Type A : Open the air inlet grille upward.
   Type B : Open two screw caps.
2. Slightly open the lower part of the front panel then pull the upper part of the front panel toward you to remove it as shown on figure ① .
3. Arrange the control wire as detail and specification as shown on figure ② .
4. Securely connect the control wire to terminal of Display unit as shown on figure ③.
   (tighten firmly but not over 0.12 N·m (0.01 kgf·m)).
5. Set the control wire out from indoor unit same portion as power supply and connecting cable as shown on figure ③.
   (Notch for wire out)
6. Reassemble the indoor unit by reverse process of 1 to 2.

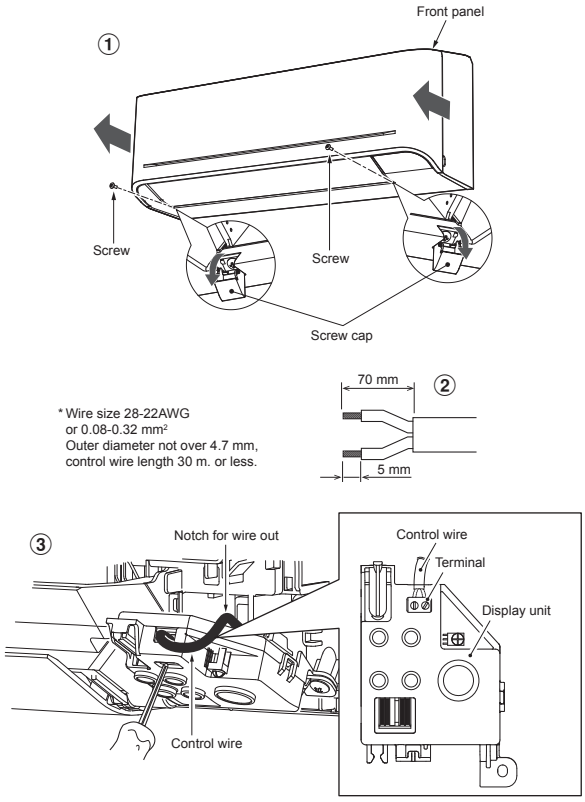

Fig. 10-3-8

< For remote controller >

1. Remove cover of remote controller by sliding down and take it out.
2. If batteries are exist, please take them out. The combination of using wire controller and batteries may cause of batteries explosion.
3. Make hole for insert control wire by use screwdriver break the polyester sheet as shown on figure ④.
4. Insert control wire from rear side of remote controller as shown on figure ⑤.
5. Fix control wire which arrange as shown on figure ⑥ and ⑦ to terminal by provided screws (tighten firmly but not over 0.25 N·m (0.03 kgf·m)).
6. Set control wire through gutter way at rear side of remote controller as shown on f gure ⑧.
7. Fix provided screw (Ø3.1×16L) on the wall to hang remote controller as shown on figure ⑨.
8. Mark and arrange hole for fix below screw (Ø3.1×25L) as shown on figure ⑨.
9. Assembly battery cover which provided with accessory bag then use provide screw (Ø3.1×25L) to fix battery cover together with wall as shown on figure ⑩ (tighten firmly but not over 0.15 N·m (0.02 kgf·m)).
10. Reassembly cover of remote controller.

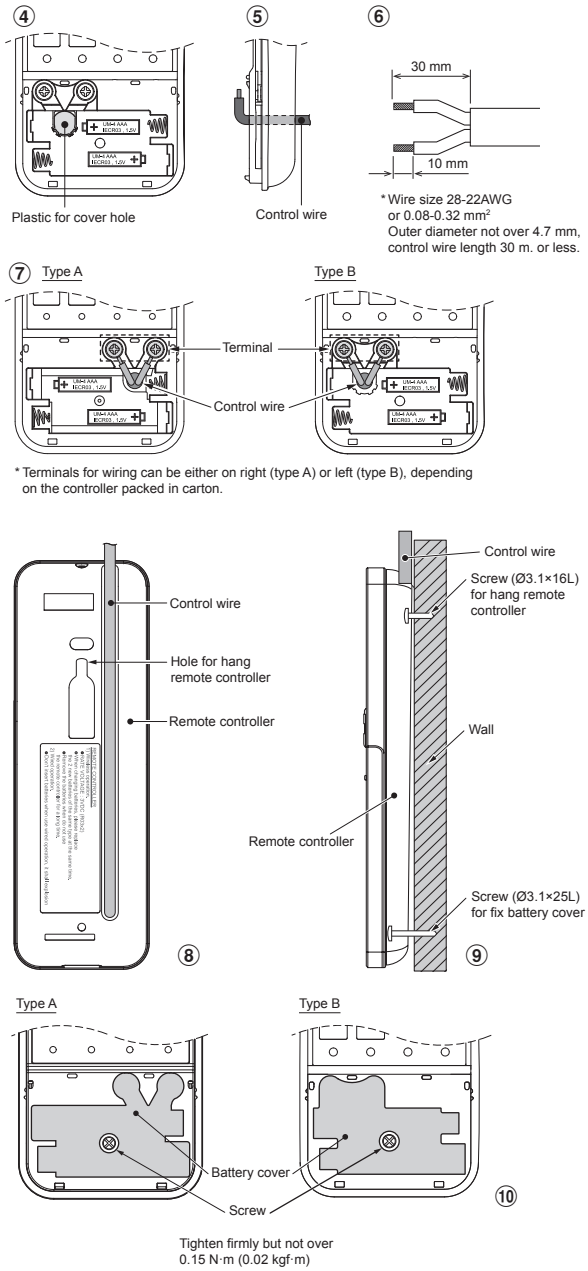

Fig. 10-3-9

***Remark** : 1. Recommend to use double insulation lead wire for connect remote control and air conditioner.
2. For wire operation, 1 remote control can control only 1 indoor unit
3. In wire operation, remote controller will return to initial condition (PRESET, TIMER and CLOCK will return to initial condition) when user shutdown power supply of air conditioner.

10-3-4. Piping and drain hose installation

<Piping and Drain Hose Forming>

* Since dewing results in a machine trouble, make sure to insulate both the connecting pipes. (Use polyethylene foam as insulating material.)

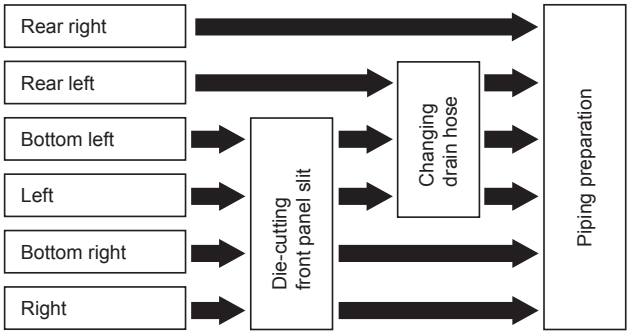

Fig. 10-3-10

1. Die-cutting front panel slit

Cut out the slit on the left or right side of the front panel for the left or right connection and the slit on the bottom left or right side of the front panel for the bottom left or right connection with a pair of nippers.

2. Changing drain hose

For leftward connection, bottom-leftward connection and rear-leftward connection's piping, it is necessary to change the drain hose and drain cap.

<How to remove the drain hose>

- The drain hose can be removed by removing the screw securing the drain hose and then pulling out the drain hose.
- When removing the drain hose, be careful of any sharp edges of steel plate. The edges can injuries.
- To install the drain hose, insert the drain hose firmly until the connection part contacts with heat insulator, and then secure it with original screw.

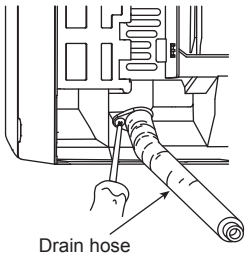

Fig. 10-3-11

<How to remove the drain cap>

Clip the drain cap by needle-nose pliers and pull out.

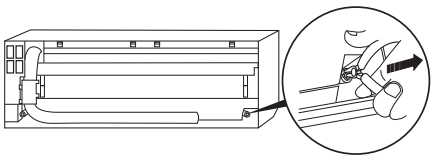

Fig. 10-3-12

<How to fix the drain cap>

1) Insert hexagon wrench (4 mm) in a center head.

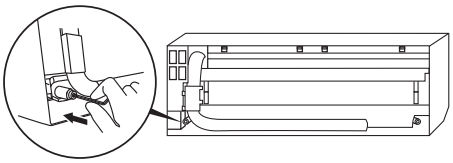

2) Firmly insert drain cap.

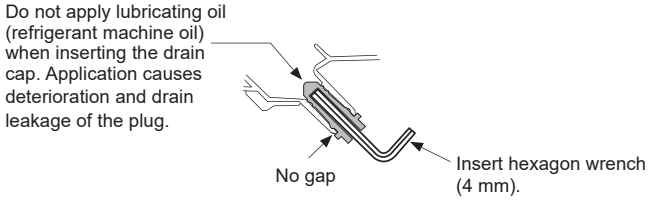

Fig. 10-3-13

CAUTION

Firmly insert the drain hose and drain cap; otherwise, water may leak.

<In case of right or left piping>

- After scribing slits inside of the front panel with a knife or a making-off pin, cut them with a pair of nippers or an equivalent tool.

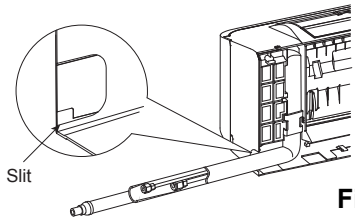

Fig. 10-3-14

<In case of bottom right or bottom left piping>

- After scribing slits inside of the front panel with a knife or a making-off pin, cut them with a pair of nippers or an equivalent tool.

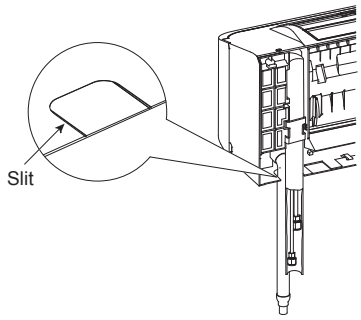

Fig. 10-3-15

<Left-hand connection with piping>

Bend the connecting pipe so that it is laid within 43 mm above the wall surface. If the connecting pipe is laid exceeding 43 mm above the wall surface, the indoor unit may unstably be set on the wall.
When bending the connecting pipe, make sure to use a spring bender so as not to crush the pipe.

Bend the connecting pipe within a radius of 30 mm.

<u>To connect the pipe after installation of the unit (figure)</u>

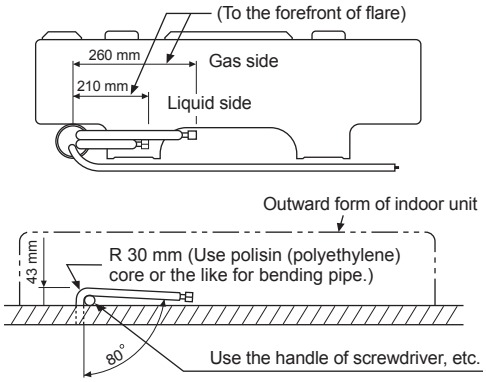

Fig. 10-3-16

NOTE :

If the pipe is bent incorrectly, the indoor unit may unstably be set on the wall.
After passing the connecting pipe through the pipe hole, connect the connecting pipe to the auxiliary pipes and wrap the facing tape around them.

CAUTION

- Bind the auxiliary pipes (two) and connecting cable with facing tape tightly. In case of leftward piping and rear-leftward piping, bind the auxiliary pipes (two) only with facing tape.

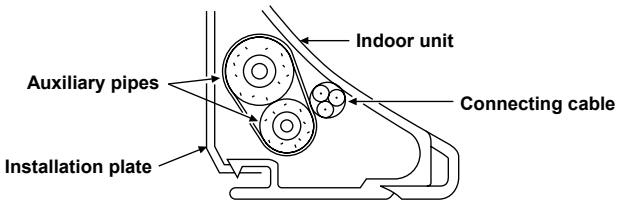

- Carefully arrange pipes so that any pipe does not stick out of the rear plate of the indoor unit.
- Carefully connect the auxiliary pipes and connecting pipes to each other and cut off the insulating tape wound on the connecting pipe to avoid double-taping at the joint, moreover, seal the joint with the vinyl tape, etc.
- Since dewing results in a machine trouble, make sure to insulate both the connecting pipes. (Use polyethylene foam as insulating material.)
- When bending a pipe, carefully do it, not to crush it.

10-3-5. Indoor unit fixing

1. Pass the pipe through the hole in the wall, and hook the indoor unit on the installation plate at the upper hooks.
2. Swing the indoor unit to right and left to confirm that it is firmly hooked up on the installation plate.
3. While pressing the indoor unit onto the wall, hook it at the lower part on the installation plate. Pull the indoor unit toward you to confirm that it is firmly hooked up on the installation plate.

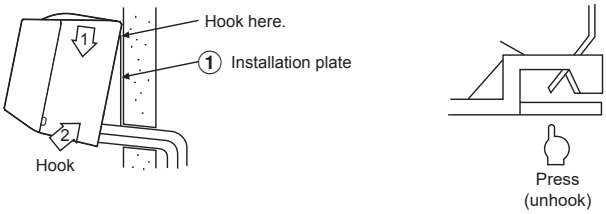

Fig. 10-3-17

- For detaching the indoor unit from the installation plate, pull the indoor unit toward you while pushing its bottom up at the specified parts.

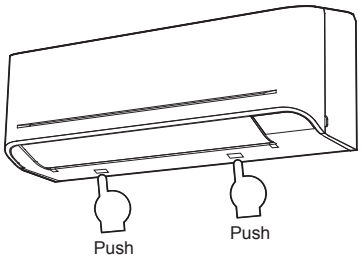

Fig. 10-3-18

10-3-6. Drainage

1. Run the drain hose sloped downwards.

NOTE

- Hole should be made at a slight downward slant on the outdoor side.

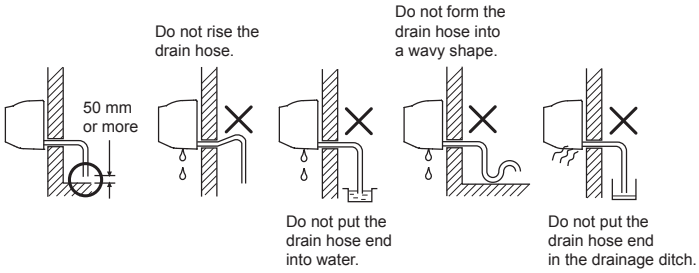

Fig. 10-3-19

2. Put water in the drain pan and make sure that the water is drained out of doors.
3. When connecting extension drain hose, insulate the connecting part of extension drain hose with shield pipe.

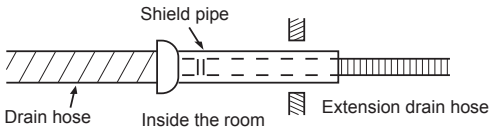

Fig. 10-3-20

CAUTION

Arrange the drain pipe for proper drainage from the unit. Improper drainage can result in dew-dropping.

This air conditioner has the structure designed to drain water collected from dew, which forms on the back of the indoor unit, to the drain pan.
Therefore, do not store the power cord and other parts at a height above the drain guide.

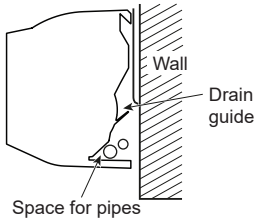

Fig. 10-3-21

10-4. Outdoor Unit

10-4-1. Installation place

- A place which provides the spaces around the outdoor unit as shown in the diagram
- A place which can bear the weight of the outdoor unit and does not allow an increase in noise level and vibration
- A place where the operation noise and discharged air do not disturb your neighbors
- A place which is not exposed to a strong wind
- A place free of a leakage of combustible gases
- A place which does not block a passage
- When the outdoor unit is to be installed in an elevated position, be sure to secure its feet.
- The allowable length of the connecting pipe.

Model	RAS-13E2AVG-E
Chargeless	Up to 15 m
Maximum length	15 m
Additional refrigerant charging	-
Maximum refrigerant charging	0.54 kg

- The allowable height of outdoor unit installation site.

Model	RAS-13E2AVG-E
Maximum height	12 m

- A place where the drain water does not raise any problems or with good drainage.
- A place where it can be installed horizontally.

Precautions for adding refrigerant

- Use a scale having a precision with at least 10 g per index line when adding the refrigerant.
  Do not use a bathroom scale or similar instrument.

CAUTION

When the outdoor unit is installed in a place where the drain water might cause any problems, Seal the water leakage point tightly using a silicone adhesive or caulking compound.

10-4-2. Precautions about installation in Regions with Snowfall and Cold Temperatures

- Do not use the supplied drain nipple for draining water. Drain the water from all the drain holes directly.
- To protect the outdoor unit from snow accumulation, install a holding frame, and attach a snow protection hood and plate.

* Do not use a double-stacked design.

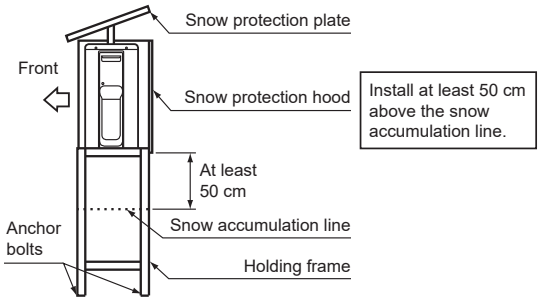

Fig. 10-4-1

CAUTION

1. Install the outdoor unit without anything blocking the air discharging.
2. When the outdoor unit is installed in a place exposed always exposed to strong wind like a coast or on a high storey of a building, secure the normal fan operation using a duct or a wind shield.
3. In particularly windy areas, install the unit such as to avoid admission of wind.
4. Installation in the following places may result in trouble.
   Do not install the unit in such places.
   - A place full of machine oil.
   - A saline-place such as the coast.
   - A place full of sulfide gas.
   - A place where high-frequency waves are likely to be generated as from audio equipment, welders, and medical equipment.

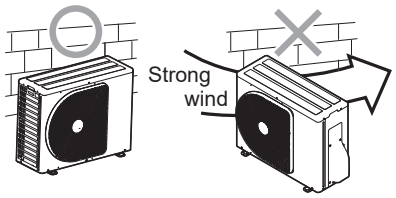

Fig. 10-4-2

Draining the Water

- Holes are provided on the base plate of the outdoor unit to ensure that the defrost water produced during heating operations is drained off eff ciently. If a centralized drain is required when installing the unit on a balcony or wall, follow the steps below to drain off the water.

1. Proceed with water-proof ng by installing the water-proof rubber caps
   in the 2 elongated holes on the base plate of the outdoor unit. [How to install the water-proof rubber caps]
   1) Place four f ngers into each cap, and insert the caps into the water drain holes by pushing them into place from the underside of the base plate.
   2) Press down on the outer circumferences of the caps to ensure that they have been inserted tightly. (Water leaks may result if the caps have not been inserted properly, if their outer circumferences lift up or the caps catch on or wedge against something.)

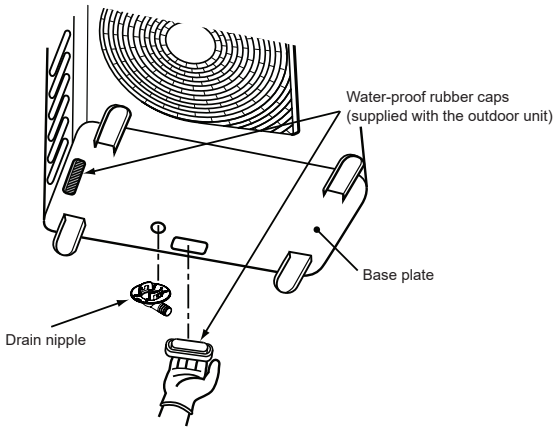

2. Install the drain nipple and a commercially available drain hose (with 16 mm inside diameter), and drain off the water.
   (For the position where the drain nipple is installed, refer to the installation diagram of the indoor and outdoor units.)
   - Check that the outdoor unit is horizontal, and route the drain hose at a downward sloped angle while ensuring that it is connected tautly.

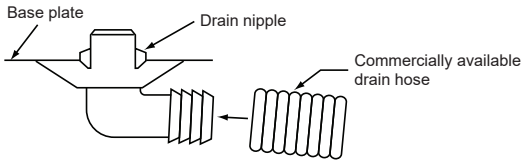

Do not use ordinary garden hose, but one can fatten and prevent water from draining.

10-4-3. Refrigerant piping connection

<Flaring>

1. Cut the pipe with a pipe cutter.

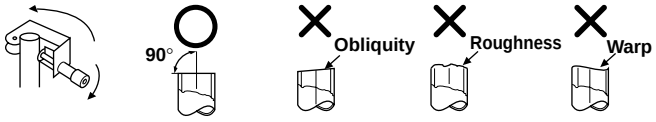

Fig. 10-4-3

2. Insert a flare nut into the pipe, and flare the pipe.
   - **Projection margin in flaring : A (Unit : mm)**

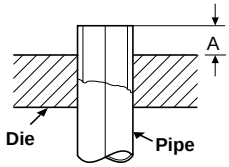

Fig. 10-4-4

RIDGID (clutch type)

Outer dia. of copper pipe	Tool used	Conventional tool used
Ø6.35	0 to 0.5	1.0 to 1.5
Ø9.52	0 to 0.5	1.0 to 1.5
Ø12.70	0 to 0.5	1.0 to 1.5
Pipes thickness	0.8 mm or more	

IMPERIAL (wing nut type)

Outer dia. of copper pipe	Tool used
Ø6.35	1.5 to 2.0
Ø9.52	1.5 to 2.0
Ø12.70	2.0 to 2.5
Pipes thickness	0.8 mm or more

CAUTION

- Do not scratch the inner surface of the flared part when removing burrs.
- Flare processing under the condition of scratches on the inner surface of flare processing part will cause refrigerant gas leak.

<Tightening connection>

Align the centers of the connecting pipes and tighten the flare nut as far as possible with your fingers. Then tighten the nut with a spanner and torque wrench as shown in the figure.

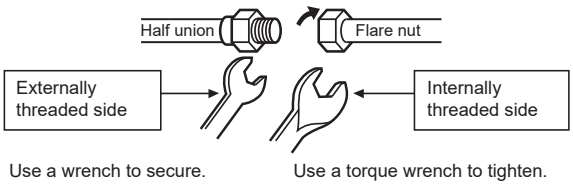

Fig. 10-4-5

CAUTION

Do not apply excess torque.
Otherwise, the nut may crack depending on the conditions.

(Unit : N•m)

Outer dia. of copper pipe	Tightening torque
Ø6.35 mm	16 to 18 (1.6 to 1.8 kgf•m)
Ø9.52 mm	30 to 42 (3.0 to 4.2 kgf•m)
Ø12.70 mm	50 to 62 (5.0 to 6.2 kgf•m)

Tightening torque of flare pipe connections
The operating pressure of R32 is higher than that of R22 and R410A (Approx. 1.6 times).
It is therefore necessary to firmly tighten the flare pipe connecting sections (which connect the indoor and outdoor units) up to the specified tightening torque. Incorrect connections may cause not only a gas leakage, but also damage to the refrigerant cycle.

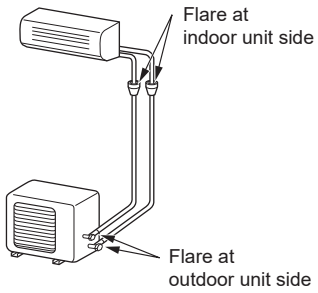

Fig. 10-4-6

Evacuating

After the piping has been connected to the indoor unit, you can perform the air purge together at once.

AIR PURGE
Evacuate the air in the connecting pipes and in the indoor unit using a vacuum pump. Do not use the refrigerant in the outdoor unit. For details, see the manual of the vacuum pump.

<Using a vacuum pump>

Be sure to use a vacuum pump with counter-flow prevention function so that inside oil of the pump does not flow backward into pipes of the air conditioner when the pump stops. (If oil inside of the vacuum pump enters into the air conditioner, which use R32, refrigeration cycle trouble may result.)

1. Connect the charge hose from the manifold valve to the service port of the gas side packed valve.
2. Connect the charge hose to the port of the vacuum pump.
3. Open fully the low pressure side handle of the gauge manifold valve.
4. Operate the vacuum pump to start evacuating. Perform evacuating for about 15 minutes if the piping length is 20 meters. (15 minutes for 20 meters) (assuming a pump capacity of 27 liters per minute. Then confirm that the compound pressure gauge reading is -101 kPa (76 cmHg).
5. Close the low pressure side valve handle of gauge manifold.
6. Open fully the valve stem of the packed valves (both side of Gas and Liquid).
7. Remove the charging hose from the service port.
8. Securely tighten the caps on the packed valves.

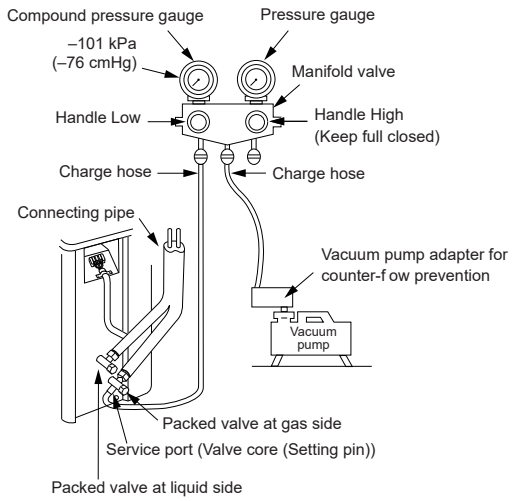

Fig. 10-4-7

CAUTION

- **KEEP IMPORTANT 7 POINTS FOR PIPING WORK**
  (1) Take away dust and moisture (inside of the connecting pipes).
  (2) Tighten the connections (between pipes and unit).
  (3) Evacuate the air in the connecting pipes using a VACUUM PUMP.
  (4) Check gas leak (connected points).
  (5) Be sure to fully open the packed valves before operation.
  (6) Reusable mechanical connectors and flared joints are not allowed indoors. When mechanical connectors are reused indoors, sealing parts shall be renewed. When flared joints are reused indoors, the flare part shall be refabricated.
  (7) Don't operate air conditioner in case no refrigerant in the system.

<Packed valve handling precautions>

- Open the valve stem all the way out, but do not try to open it beyond the stopper.

Pipe size of Packed Valve	Size of Hexagon wrench
12.70 mm and smallers	A = 4 mm
15.88 mm	A = 5 mm

<Pump down process>

1. Turn off the Air Conditioner system.
2. Connect the charge hose from the manifold valve to the service port of the packed valve at gas side.
3. Turn on the Air Conditioner system in cooling operation more than 10 minutes.
4. Check the operating pressure of the system should be normal value. (Ref. with product specification)
5. Release the valve rod cap of both service valves.
6. Use the Hexagon wrench to turning the valve rod of Liquid side fully close.
   (*Make sure no entering air into the system)
7. Continue operate Air Conditioner system until the gauge of manifold dropped into the range of 0.5 - 0 kgf/cm^2
8. Use the Hexagon wrench to turning the valve rod of Gas side fully close. And turn off the Air Conditioner system immediately thereafter.
9. Remove the gauge manifold from the service port of the packed valve.
10. Securely tighten the valve rod cap to the both service valves.

CAUTION

Should be check the compressor operating condition while pumping down process. It must not any abnormal sound, more vibration. It is abnormal condition appears and must turn off the Air Conditioner immediately.

- Securely tighten the valve cap with torque in the following table

Cap	Cap Size (H)	Torque
Valve Rod Cap	H17 - H19	14~18 N.m (1.4 to 1.8 kgf·m)
	H22 - H30	33~42 N.m (3.3 to 4.2 kgf·m)
Service Port Cap	H14	8~12 N.m (0.8 to 1.2 kgf·m)
	H17	14~18 N.m (1.4 to 1.8 kgf·m)

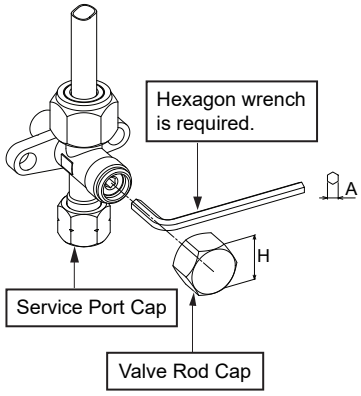

Fig. 10-4-8

10-5. Electrical works

Model	RAS-B13E2KVG-E1
Power source	50Hz, 220 – 240V Single phase
Maximum running current	7.4A
Circuit breaker rating	15A
Power supply cable	H07RN-F or 60245 IEC66 (1.25 mm^2 or more)
Connecting cable	

10-5-1. Wiring Connection

<Indoor unit>

Wiring of the connecting cable can be carried out without removing the front panel.

1. Remove the air inlet grille.
   Open the air inlet grille upward and pull it toward you.
2. Remove the terminal cover and cord clamp.
3. Insert the connecting cable (according to the local cords) into the pipe hole on the wall.
4. Take out the connecting cable through the cable slot on the rear panel so that it protrudes about 20 cm from the front.
5. Insert the connecting cable fully into the terminal block and secure it tightly with screws.
6. Tightening torque : 1.2 N·m (0.12 kgf·m)
7. Secure the connecting cable with the cord clamp.
8. Fix the terminal cover and air inlet grille on the indoor unit.

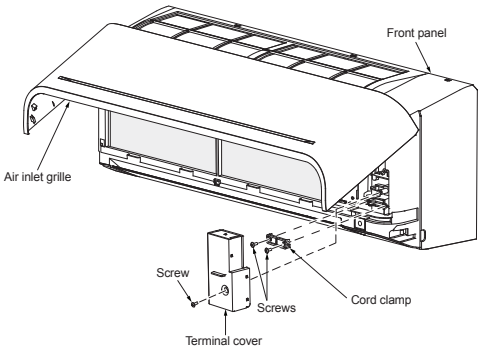

Fig. 10-5-1

<How to install the air inlet grille on the indoor unit>

- When attaching the air inlet grille, the contrary of the removed operation is performed.

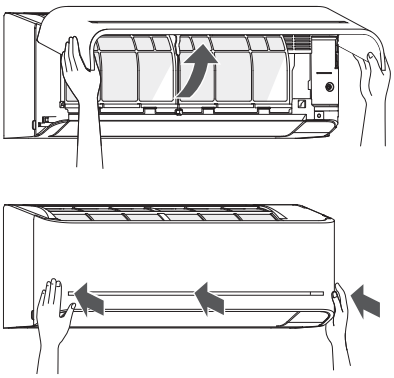

Fig. 10-5-2

<Outdoor unit>

1. Remove the valve cover, the electric parts cover and the cord clamp from the outdoor unit.
2. Connect the connecting cable to the terminal as identified by the matching numbers on the terminal block of indoor and outdoor unit.
3. Insert the power cord and the connecting cable carefully into the terminal block and secure it tightly with screws.
4. Use vinyl tape, etc. to insulate the cords which are not going to be used. Locate them so that they do not touch any electrical or metal parts.
5. Secure the power cord and the connecting cable with the cord clamp.
6. Attach the electric parts cover and the valve cover on the outdoor unit.

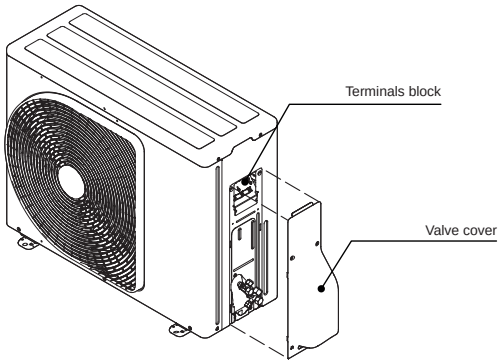

Fig. 10-5-3

10-5-2. Power Supply and Connecting Cable Connection

In Case of Indoor Unit Connect With 1:1 Outdoor Unit

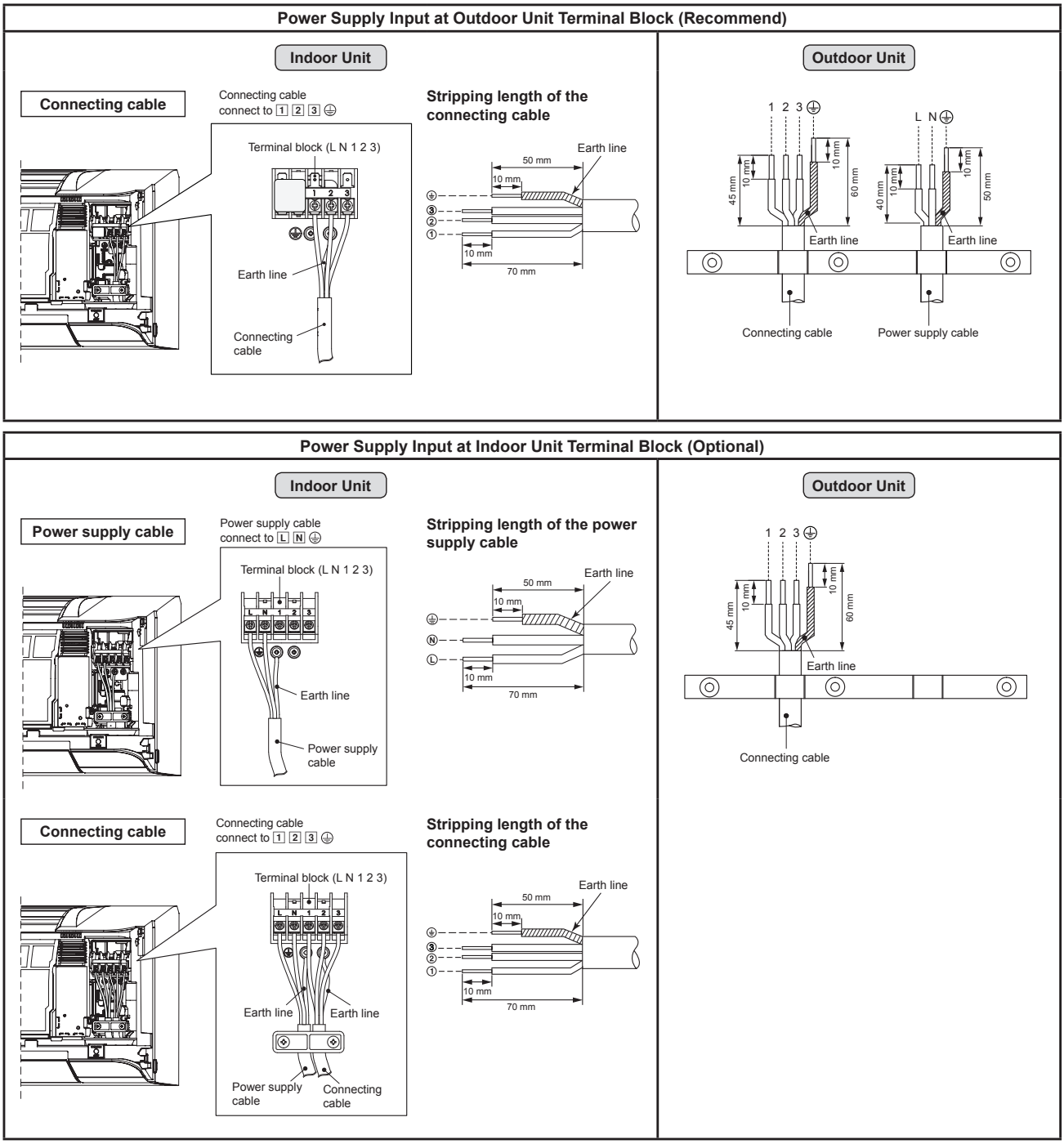

10-5-3. Power supply input Wiring Diagram for 1:1 Outdoor Unit

Power input at Outdoor Terminal Block (Recommend)

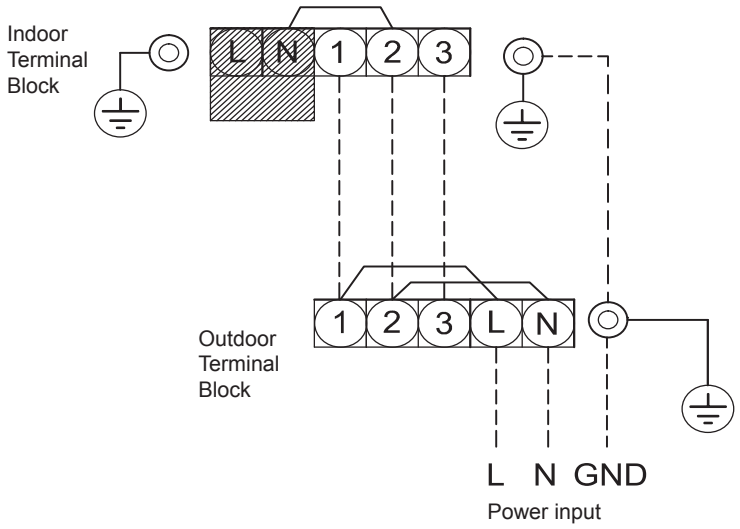

Power input at Indoor Terminal Block (Optional)

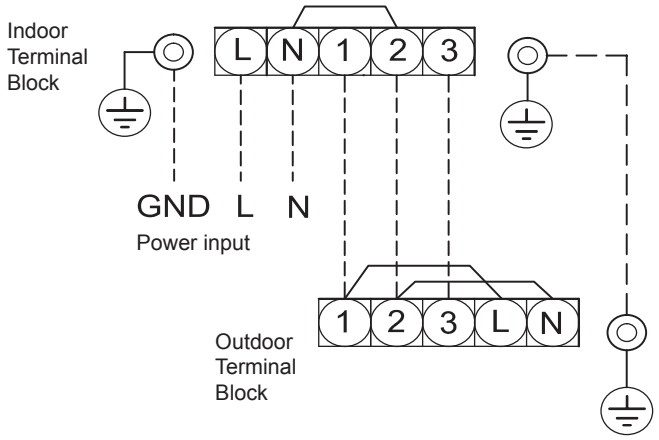

CAUTION

1. The power supply must be same as the rated of air conditioner.
2. Prepare the power source for exclusive use with air conditioner.
3. Circuit breaker must be used for the power supply line of this air conditioner.
4. Be sure to comply power supply and connecting cable for size and wiring method.
5. Every wire must be connected firmly.
6. Perform wiring works so as to allow a general wiring capacity.
7. Wrong wiring connection may cause some electrical part burn out.
8. Incorrect or incomplete wiring is carried out, it will cause an ignition or smoke.
9. This product can be connected to main power supply.
   Connection to fixed wiring : A switch which disconnects all poles and has a contact separation at least 3mm must be incorporated in the fixed wiring.

10-5-4. In Case of Indoor Unit Connect With Inverter Multi System (IMS)

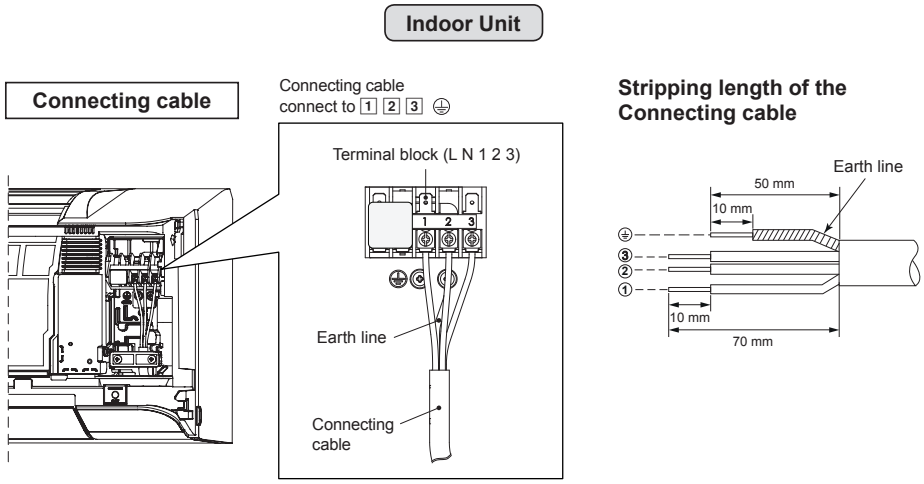

Power supply input Wiring Diagram for Inverter Multi System (IMS)

Power input at Outdoor Terminal Block

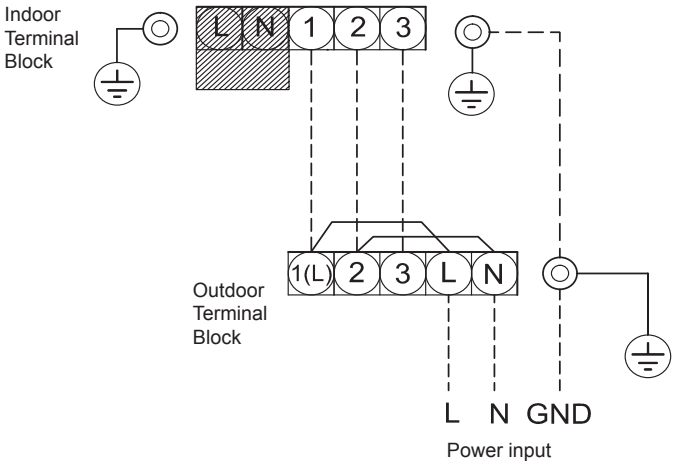

CAUTION

1. The power supply must be same as the rated of air conditioner.
2. Prepare the power source for exclusive use with air conditioner.
3. Circuit breaker must be used for the power supply line of this air conditioner.
4. Be sure to comply power supply and connecting cable for size and wiring method.
5. Every wire must be connected firmly.
6. Perform wiring works so as to allow a general wiring capacity.
7. Wrong wiring connection may cause some electrical part burn out.
8. Incorrect or incomplete wiring is carried out, it will cause an ignition or smoke.
9. This product can be connected to main power supply.
   Connection to fixed wiring : A switch which disconnects all poles and has a contact separation at least 3mm must be incorporated in the fixed wiring.

10-6. Others

10-6-1. Gas leak test

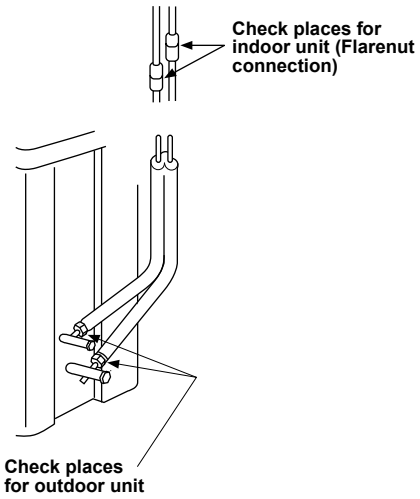

Fig. 10-6-1

- Check the flare nut connections for the gas leak with a gas leak detector or soap water.

10-6-2. Remote Control A-B Selection

- When two indoor units are installed in the same room or adjacent two rooms, if operating a unit, two units may receive the remote control signal simultaneously and operate. In this case, the operation can be preserved by setting either one remote control to B setting. (Both are set to A setting in factory shipment.)
- The remote control signal is not received when the settings of indoor unit and remote control are different.
- There is no relation between A setting/B setting and A room/B room when connecting the piping and cables.

To separate using of remote control for each indoor unit in case of 2 air conditioner are installed near.

Remote Control B Setup.

1. Press [RESET] button on the indoor unit to turn the air conditioner ON.
2. Point the remote control at the indoor unit.
3. Push and hold [CHECK] button on the Remote Control by the tip of the pencil. “00” will be shown on the display (Picture ①).
4. Press [MODE] during pushing [CHECK]. “B” will show on the display and “00” will disappear and the air conditioner will turn OFF. The Remote Control B is memorized (Picture ②).

Note : 1. Repeat previous step to reset Remote Control to be A.
2. Remote Control A have not “A” display.
3. Default setting of Remote Control from factory is A.

Fig. 10-6-2

Adhesion of B label (When setting to B)

- Be sure to adhere the B label ⑫ on the cover terminal same as the below figure.

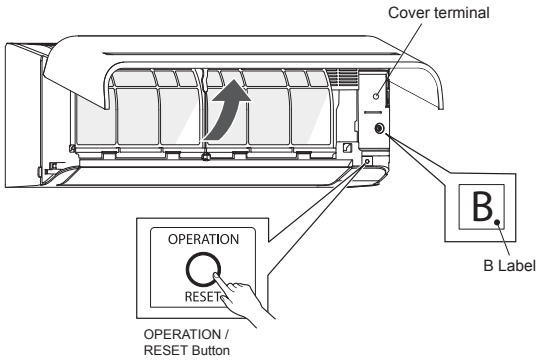

Fig. 10-6-3

10-6-3. Test operation

To switch the TEST RUN (COOL) mode, press [RESET] button for 10 sec. (The beeper will make a short beep.)

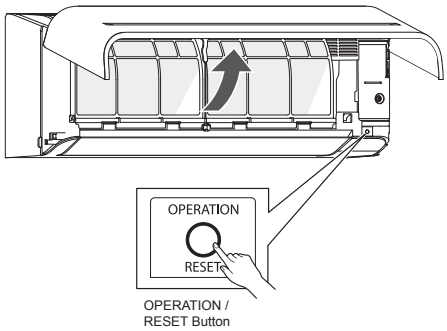

Fig. 10-6-4

10-6-4. Auto Restart Function Setting

This product is designed so that, after a power failure, it can restart automatically in the same operating mode as before the power failure.

Information

The product is shipped with Auto Restart function in the ON position. Turn it OFF if this function is not required.

<How to turn OFF the Auto Restart Function>

- Press and hold the [OPERATION] button on the indoor unit for 3 seconds (3 beep sounds but OPERATION lamp does not blink).

<How to turn ON the Auto Restart Function>

- Press and hold the [OPERATION] button on the indoor unit for 3 seconds (3 beep sounds and OPERATION lamp blink 5 time/sec for 5 seconds).

NOTE

- In case of ON timer or OFF timer are set, AUTO RESTART OPERATION does not activate.

11. HOW TO DIAGNOSE THE TROUBLE

The pulse motor circuits are mounted to both indoor and outdoor units. Therefore, diagnose troubles according to the trouble diagnosis procedure as described below. (Refer to the check points in servicing written on the wiring diagrams attached to the indoor/outdoor units.)

Table 11-1

No.	Troubleshooting Procedure
1	First Confirmation
2	Primary Judgment
3	Judgment by Flashing LED of Indoor Unit
4	Self-Diagnosis by Remote Controller
5	Judgment of Trouble by Every Symptom

No.	Troubleshooting Procedure
6	How to Check Simply the Main Parts
7	Troubleshooting
8	How to Diagnose Trouble in Outdoor Unit
9	How to Check Simply the Main Parts
10	How to Simply Judge Whether Outdoor Fan Motor is Good or Bad

◆ Precautions when handling the new inverter

⚠ CAUTION: HIGH VOLTAGE

The high voltage circuit is incorporated.

Be careful to do the check service, as the electric shock may be caused in case of touching parts on the P.C. board by hand.

The new inverter will be incorporated starting with this unit.

◆ The control circuitry has an uninsulated construction.

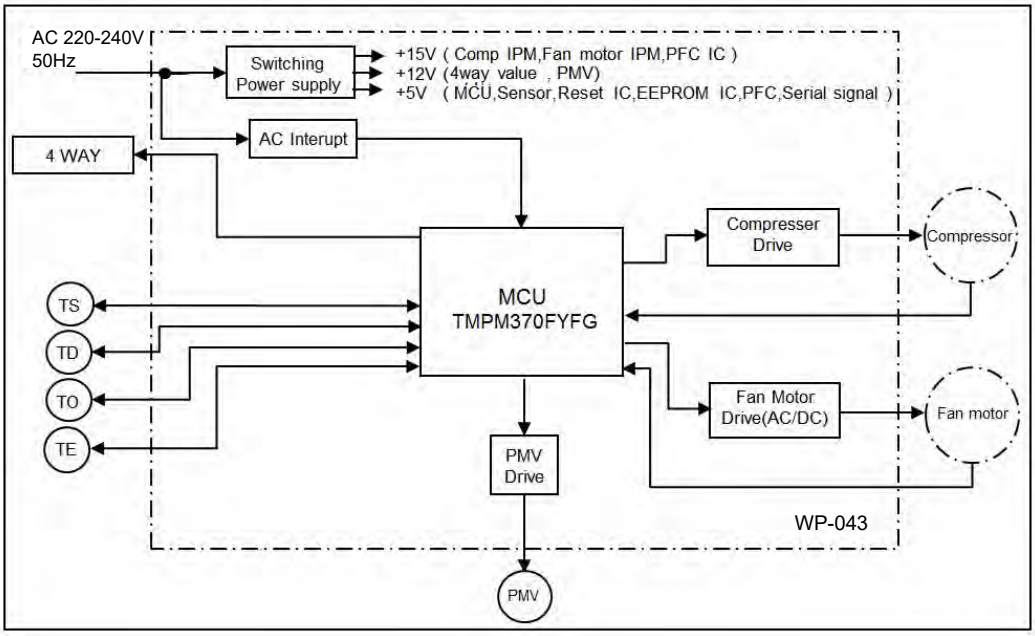

Fig. 11-1

⚠ CAUTION

A high voltage (equivalent to the supply voltage) is also energized to ground through the sensors, PMV and other low-voltage circuits. The sensor leads and other wires are covered with insulated tubes for protection. Nevertheless, care must be taken to ensure that these wires are not pinched.

Take sufficient care to avoid directly touching any of the circuit parts without first turning off the power.

At times such as when the circuit board is to be replaced, place the circuit board assembly in a vertical position.

Laying the board flat on an electrically conductive object (such as the top panel of the air conditioner's outdoor unit) while a charge is still retained by the electrolytic capacitors of the inverter's main circuit may cause short-circuiting between the electrolytic capacitors and secondary circuit components and result in damage to the components.

Fig. 11-2

Do NOT lay the circuit board assembly flat.

◆ Precautions when inspecting the control section of the outdoor unit

NOTE :

A large-capacity electrolytic capacitor is used in the outdoor unit controller (inverter). Therefore, if the power supply is turned off, charge (charging voltage DC280 to 380V) remains and discharging takes a lot of time. After turning off the power source, if touching the charging section before discharging, an electrical shock may be caused. Discharge the electrolytic capacitor completely by using soldering iron, etc.

< Discharging method >

1. Remove the inverter cover (plating) by opening four mounting claws.
2. As shown below, connect the discharge resistance (approx. 100Ω40W) or plug of the soldering iron to voltage between + – terminals of the C-07 (“WARNING ELECTRIC SHOCK” is indicated.) electrolytic capacitor (760μF/400V) on P.C. board, and then perform discharging.

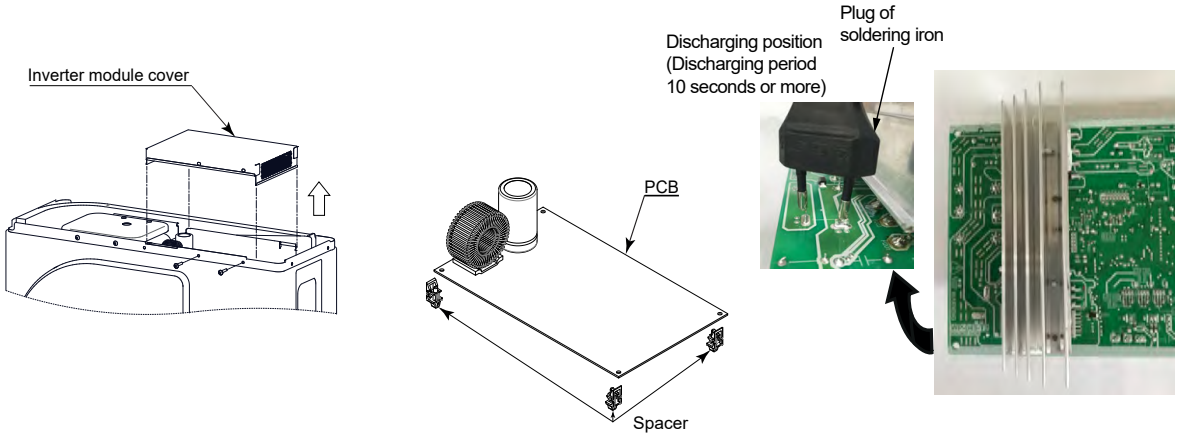

Fig. 11-3

11-1. First Confirmation

11-1-1. Confirmation of Power Supply

Confirm that the power breaker operates (ON) normally.

11-1-2. Confirmation of Power Voltage

Confirm that power voltage is AC 220–230–240 ± 10%.

If power voltage is not in this range, the unit may not operate normally.

11-1-3. Operation Which is not a Trouble (Program Operation)

For controlling the air conditioner, the program operations are built in the microcomputer as described in the following table.

If a claim is made for running operation, check whether or not it meets to the contents in the following table.

When it does, we inform you that it is not trouble of equipment, but it is indispensable for controlling and maintaining of air conditioner.

Table 11-1-1

No.	Operation of air conditioner	Description
1	When power breaker is turned “ON”, the operation indicator (White) of the indoor unit flashes.	The OPERATION lamp of the indoor unit flashes when power source is turned on. If [⏻] button is operated once, flashing stops. (Flashes also in power failure)
2	Compressor may not operate even if the room temperature is within range of compressor-ON.	The compressor does not operate while compressor restart delay timer (3-minutes timer) operates. The same phenomenon is found after power source has been turned on because 3-minutes timer operates.
3	In Dry and ECO mode, FAN (air flow) display does not change even though FAN (air flow select) button is operated.	The air flow indication is fixed to [AUTO].
4	Increasing of compressor motor speed stops approx. 30 seconds after operation started, and then compressor motor speed increases again approx. 30 seconds after.	For smooth operation of the compressor, the compressor motor speed is restricted to Max. 41 rps for 2 minutes, and Max.91 rps for 2 minutes to 3 minutes, respectively after the operation has started.
5	In AUTO mode, the operation mode is changed.	After selecting Cool or Heat mode, select an operation mode again if the compressor keeps stop status for 15 minutes.
6	In HEAT mode, the compressor motor speed does not increase up to the maximum speed or decreases before the temperature arrives at the set temperature.	The compressor motor speed may decrease by high-temp. release control (Release protective operation by temp.-up of the indoor heat exchanger) or current release control.

11-2. Primary Judgment

To diagnose the troubles, use the following methods.

1) Judgment by flashing LED of indoor unit
2) Self-diagnosis by service check remote controller
3) Judgment of trouble by every symptom

Firstly use the method 1) for diagnosis. Then, use the method 2) or 3) to diagnose the details of troubles.

11-3. Judgment by Flashing LED of Indoor Unit

While the indoor unit monitors the operation status of the air conditioner, if the protective circuit operates, the contents of self-diagnosis are displayed with block on the indoor unit indication section.

Table 11-3-1

Indoor indication lamp flashes.

Which lamp does flash?

Item	Check code	Block display	Description for self-diagnosis
A	—	OPERATION Flashing display (1 Hz)	Power failure (when power is ON)
B	00	OPERATION Flashing display (5 Hz)	Protective circuit operation for indoor P.C. board
C	01	OPERATION TIMER (White) Flashing display (5 Hz)	Protective circuit operation for connecting cable and serial signal system
D	02	OPERATION Flashing display (5 Hz)	Protective circuit operation for outdoor P.C. board
E	03	OPERATION TIMER Flashing display (5 Hz)	Protective circuit operation for others (including compressor)
F	33	OPERATION / TIMER	Release status display
		Normal / Normal	Nothing
		Flash 1 Hz / None	Current release
		Flash 2 Hz 2 times every 1 sec / None	TD release
		None / Flash 1 Hz	TC release

NOTES :

1. The contents of items B and C and a part of item E are displayed when air conditioner operates.
2. When item B and C, and item B and a part of item E occur concurrently, priority is given to the block of item B.
3. The check codes can be confirmed on the remote controller for servicing.

11-4. Self-Diagnosis by Remote Controller (Check Code)

1. If the lamps are indicated as shown B to E in Table 11-3-1, execute the self-diagnosis by the remote controller.
2. When the remote controller is set to the service mode, the indoor controller diagnoses the operation condition and indicates the information of the self-diagnosis on the display of the remote controller with the check codes. If a fault is detected, all lamps on the indoor unit will flash at 5Hz and it will beep for 10 seconds (Beep, Beep, Beep ...). The timer lamp usually flashes (5Hz) during self-diagnosis.

11-4-1. How to Use Remote Controller in Service Mode

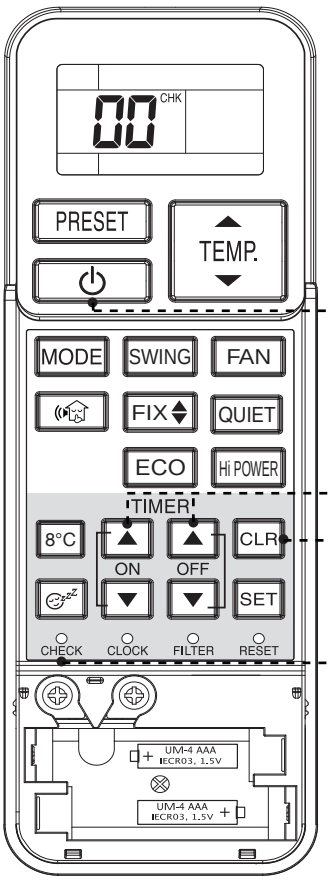

1 **Press [CHECK] button with a tip of pencil to set the remote controller to the service mode.**

- " 00 " is indicated on the display of the remote controller.

2 **Press [ON ▲] or [OFF ▲] button**

If there is no fault with a code, the indoor unit will beep once (Beep) and the display of the remote controller will change as follows :

00 → 01 → 02 ··· 1d → 1E → 33

- The TIMER indicator of the indoor unit flashes continuously. (5 times per 1 sec.)
- Check the unit with all 52 check codes 00 to 33) (as shown in Table-11-3-1.
- Press [ON▼] or [OFF ▼] button to change the check code backward.

If there is a fault, the indoor unit will beep for 10 seconds (Beep, Beep, Beep...).

Note the check code on the display of the remote controller.

- 2-digits alphanumeric will be indicated on the display.
- All indicators on the indoor unit will flash. (5 times per 1 sec.)

3 **Press [CLR] button. After service finish for clear** service code in memory.

- "7F" is indicated on the display of the remote control.

4 **Press [⏻] button to release the service mode.**

- The display of the remote controller returns to as it was before service mode was engaged.

Alphanumeric characters are used for the check codes.

5 is 5.	6 is 6.
A is A.	b is B.
C is C.	d is D.

Fig. 11-4-1

11-4-2. Caution at Servicing

1. After using the service mode of remote controller finished, press the [⏻] button to reset the remote controller to normal function.
2. After finished the diagnosis by the remote controller, turn OFF power supply and turn its ON again to reset the air conditioner to normal operation. However, the check codes are not deleted from memory of the microcomputer.
3. After servicing finished, press [CLR] button of remote controller under service mode status to send code "7F" to the indoor unit. The check code stored in memory is cleared.

Table 11-4-1

Block distinction		Operation of diagnosis function				Action and Judgment
Check code	Block	Check code	Cause of operation	Air conditioner status	Display flashing error	
00	Indoor P.C. board.	0C	TA sensor ; The room temperature sensor is short-Circuit or disconnection.	Operation continues.	Flashes when error is detected.	1. Check the sensor TA and connection. 2. In case of the sensor and its connection is normal, check the P.C. board.
		0d	TC sensor ; The heat exchanger temperature sensor of the indoor unit is out of place, disconnection, short-circuit or migration.	Operation continues.	Flashes when error is detected.	1. Check the sensor TC and connection. 2. In case of the sensor and its connection is normal, check the P.C. board.
		0E	Gas detector sensor failure	Outdoor Unit "OFF" Indoor Unit continue fan only operation for 250 minute or "OFF".	Flashes when error is detected.	1. Check Gas sensor shortage / open. 2. Check Gas sensor disconnect.
		11	Fan motor of the indoor unit is failure, lock-rotor, short-circuit, disconnection, etc. Or its circuit on P.C. board has problem.	All OFF	Flashes when error is detected.	1. Check the fan motor and connection. 2. In case of the motor and its connection is normal, check the P.C. board.
		12	Other trouble on the indoor P.C. board.	Depend on cause of failure.	Depend on cause of failure.	1. Reset power supply. 2. Replace P.C. board.
		25	Refrigerant leakge is detected	Operation stops	"A" LED is flushing Beep sounds Fan forced operation	Check leakage Replace new sensor
		26	Gas detector sensor life time	Operation continues.	Flashes when error is detected.	Replace new sensor.

Block distinction		Operation of diagnosis function				Action and Judgment
Check code	Block	Check code	Cause of operation	Air conditioner status	Display flashing error	
01	Serial signal and connecting cable.	04	1) Defective wiring of the connecting cable or miss-wiring. 2) Operation signal has not send from the indoor unit when operation start. 3) Outdoor unit has not send return signal to the indoor unit when operation started. 4) Return signal from the outdoor unit is stop during operation. ● Some protector (hardware, if exist) of the outdoor unit open circuit of signal. ● Signal circuit of indoor P.C. board or outdoor P.C. board is failure in some period.	Indoor unit operates continue. Outdoor unit stop.	Flashes when error is detected. Flashing stop and outdoor unit start to operate when the return signal from the outdoor unit is normal.	1) to 3) The outdoor unit never operate. ● Check connecting cable and correct if defective wiring. ● Check 25A fuse of inverter P.C. board. ● Check 3.15A fuse of inverter P.C. board. ● Check operation signal of the indoor unit by using diode. Measure voltage at terminal block of the indoor unit between No.2 and No.3 (or L2 and S) If signal is varied 15-60V continuously, replace inverter P.C. board. If signal is not varied, replace indoor P.C. board. 4) The outdoor unit abnormal stop at some time. ● If the other check codes are found concurrently, check them together. ● Check protector (hardware) such as Hi-Pressure switch, Thermal-Relay, etc. ● Check refrigerant amount or any possibility case which may caused high temperature or high pressure. ● Check operation signal of the indoor unit by using diode. Measure voltage at terminal block of the indoor unit between No.2 and No.3 (or L2 and S) If signal is varied 15-60V continuously, replace inverter P.C. board. If signal is not varied, replace indoor P.C. board.

Note : Operation signal of the indoor unit shall be measured in the sending period as picture below.

Sending signal of the indoor unit when have not return signal from the outdoor unit.

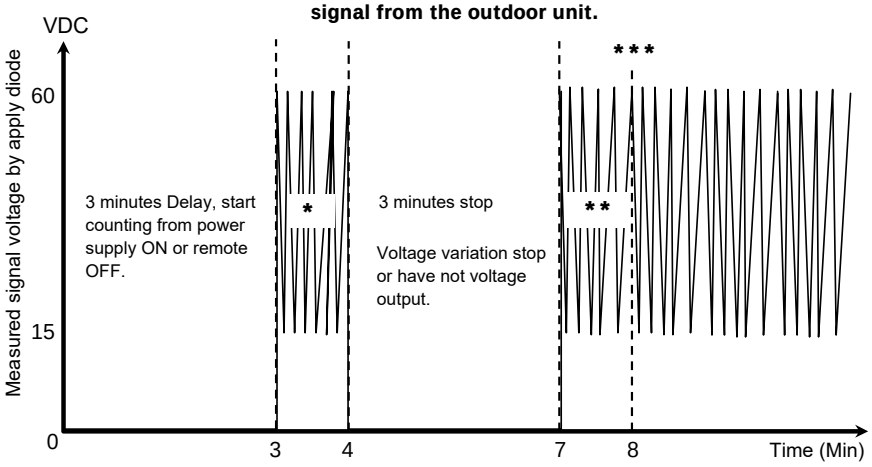

* Signal send only 1 minute and stop. Because of return signal from outdoor unit has not received.

** Signal resend again after 3 minutes stop. And the signal will send continuously.

*** 1 minute after resending, the indoor unit display flashes error.

Block distinction		Operation of diagnosis function				Action and Judgment
Check code	Block	Check code	Cause of operation	Air conditioner status	Display flashing error	
02	Outdoor P.C. board	14	Current on inverter circuit is over limit in short time. ● Inverter P.C. board is failure, IGBT shortage, etc. ● Compressor current is higher than limitation, lock rotor, etc.	All OFF	Flashes after error is detected 8 times*.	1. Remove connecting lead wire of the compressor, and operate again. 2. If outdoor fan does not operate or operate but stop after some period, replace the inverter P.C. board. 3. If outdoor fan operates normally, measure 3-Phase output of inverter P.C. board (150-270VAC) at the connecting lead wire of compressor. 4. If 3-Phase output is abnormal, replace inverter P.C.Board. 5. If 3-Phase output is normal, replace compressor. (lock rotor, etc.)
		16	Compressor position-detect circuit error or short-circuit between winding of compressor.	All OFF	Flashes after error is detected 8 times*.	1. Remove connecting lead wire of the compressor, and operate again. 2. If outdoor fan does not operate or operation but stop after some period, replace the inverter P.C. board. 3. If outdoor fan operates normally, measure resistance of compressor winding. If circuit is shortage, replace the compressor.
		17	Current-detect circuit of inverter P.C. board error.	All OFF	Flashes after error is detected 4 times*.	Even if trying to operate again, all operations stop, replace inverter P.C. board.
		18	TE or TS sensor; abnormal. Out of place, disconnection, shortage, or misconnection (TE sensor is connected to TS connector, TS sensor is connected to TE sensor connector) TE sensor; Outdoor heat exchanger temperature sensor TS sensor; Suction pipe temperature sensor	All OFF	Flashes after error is detected 4 times*.	1. Check sensors, TE, TS connection. In case of sensors and it's connection is normal, check the inverter P.C. board 2. Check 4way valve operation/position. In case TE, TS detected temperature relationship are different from normal operation, "18" might be detected.
		19	TD sensor ; Discharge pipe temperature sensor is disconnection or shortage.	All OFF	Flashes after error is detected 4 times*.	1. Check sensors TD and connection. 2. In case of the sensor and its connection is normal, check the inverter P.C. board.
		1A	Outdoor fan failure or its drive-circuit on the inverter P.C. board failure.	All OFF	Flashes after error is detected 8 times*.	1. Check the motor, measure winding resistance, shortage or lock rotor. 2. Check the inverter P.C. board.
		1b	TO sensor ; The outdoor temperature sensor is disconnection or shortage.	Operation continues.	Record error after detected 4 times*. But does not flash display.	1. Check sensors TO and connection. 2. In case of the sensor and its connection is normal, check the inverter P.C. board.

Block distinction		Operation of diagnosis function				Action and Judgment
Check code	Block	Check code	Cause of operation	Air conditioner status	Display flashing error	
02	Outdoor P.C. board	1C	Compressor drive output error. (Relation of voltage, current and frequency is abnormal) ● Overloading operation of compressor caused by over-charge refrigerant, P.M.V. failure, etc. ● Compressor failure (High current).	All OFF	Flashes after error is detected 8 times*.	1. Check installation conditions such as packed valve opening, refrigerant amount and power supply (rate ±10%, both of operation and non operation condition). 2. Check P.M.V. by measure the resistance of the coil and confirm its operation (sound of initial operation, etc.) 3. Observe any possibility cause which may affect operation load of compressor. 4. Operate again. If compressor operation is failure when 20 seconds passed (count time from operation starting of compressor), replace compressor.
	* 4 or 8 times ; When first error is detected, error is count as 1 time, then once operation is stop and re-started. After re-starting operation within 6 minutes, if same error is detected, error count is add (count become 2 times) When error count comes 4 or 8 times, record error to check code. But after re-starting operation, if no error is detected and air conditioner can operate more than 6 minutes, error count is cleared.					
03	The others (including compressor)	07	Return signal of the outdoor unit has been sent when operation start. But after that, signal is stop some time. ● Instantaneous power failure. ● Some protector (hardware) of the outdoor unit open circuit of signal. ● Signal circuit of indoor P.C. board or outdoor P.C. board is failure in some period.	Indoor unit operates continue. Outdoor unit stop.	Flashes when error is detected. Flashing stop and outdoor unit start to operate when the return signal from the outdoor unit is normal.	1. Check power supply (Rate ± 10%) 2. If the air conditioner repeat operates and stop with interval of approx. 10 to 40 minutes. ● Check protector (hardware) such as Hi-Pressure switch, Thermal-Relay, etc. ● Check refrigerant amount, packed valve opening and any possibility cause which may affect high temperature or high pressure. 3. Check operation signal of the indoor unit by using diode. Measure voltage at terminal block of the indoor unit between No.2 and No.3 (or L2 and S) If signal is varied 15-60V continuously, replace inverter P.C. board. If signal is not varied, replace indoor P.C. board.

Block distinction		Operation of diagnosis function				Action and Judgment
Check code	Block	Check code	Cause of operation	Air conditioner status	Display flashing error	
03	The others (including compressor)	1d	Compressor does not rotate. Because of missed wiring, missed phase or shortage.	All OFF	Flashes after error is detected 8 times*.	1. Remove connecting lead wire of the compressor, and operate again. 2. If outdoor fan does not operate or operation but stop after some period, replace the inverter P.C. board. 3. If outdoor fan operates normally, measure 3-Phase output of inverter P.C. board (150-270VAC) at the connecting lead wire of compressor. 4. If 3-Phase output is abnormal, replace inverter P.C.Board. 5. If 3-Phase output is normal, measure resistance of compressor winding. 6. If winding is shortage, replace the compressor.
		1E	Discharge temperature exceeded 117°C.	All OFF	Flashes after error is detected 4 times*.	1. Check sensors TD. 2. Check refrigerant amount. 3. Check P.M.V. by measure the resistance of the coil and confirm its operation (sound of initial operation, etc.) 4. Observe any possibility cause which may affect high temperature of compressor.
		1F	Compressor is high current though operation Hz is decreased to minimum limit. • Installation problem. • Instantaneous power failure. • Refrigeration cycle problem. • Compressor break down. • Compressor failure (High current).operation, etc.)	All OFF	Flashes after error is detected 8 times*.	1. Check installation conditions such as packed valve opening, refrigerant amount and power supply (rate ±10%, both of operation and non operation condition). 2. Check P.M.V. by measure the resistance of the coil and confirm its operation (sound of initial operation, etc.) 3. Observe any possibility cause which may affect high current of compressor. 4. If 1, 2 and 3 are normal, replace compressor.

Block distinction		Operation of diagnosis function				Action and Judgment
Check code	Block	Check code	Cause of operation	Air conditioner status	Display flashing error	
03	The others (including compressor)	21	Return signal of the outdoor unit has been sent when operation start. But after that, signal is stop some time. ● Instantaneous power failure. ● Some protector (hardware) of the outdoor unit open circuit of signal. ● Signal circuit of indoor P.C. board or outdoor P.C. board is failure in some period. ● TE, TC high tmperature TE for cooling operation TC for heating operation.	Indoor unit operates continue. Outdoor unit stop.	Flashes when error is detected 11 times*. Flashing stop and outdoor unit start to operate when the return signal from the outdoor unit is normal.	1. Check power supply (Rate ±10%) 2. If the air conditioner repeat operat and stop with interval of approx. 10 to 40 minutes. ● Check protector (hardware) such as Hi-Pressure switch, Thermal-Relay, etc. ● Check refrigerant amount, packed valve opening and any possibility cause which may affect high temperature or high pressure. 3. Check operation signal of the indo unit by using diode. Measure voltage at terminal block of the indoor unit between No.2 and No.3 (or L2 and S) If signal is varied 15-60V continuously, replace inverter P.C. board. If signal is not varied, replace indoor P.C. board. 4. Check and clean heat exchanger area Indoor and Outdoor unit.
	* 4, 8 or 11 times ; When first error is detected, error is count as 1 time, then once operation is stop and re-started. After re-starting operation within 6 minutes, if same error is detected, error count is add (count become 2 times) When error count comes 4, 8 or 11 times, record error to check code. But after re-starting operation, if no error is detected and air conditioner can operate more than 6 minutes, error count is cleared.					

11-5. Judgment of Trouble by Every Symptom

11-5-1. Indoor Unit (Including Remote Controller)

(1) Power is not turned on (Does not operate entirely)

<Primary check>

1. Is the supply voltage normal?
2. Is the normal voltage provided to the outdoor unit?
3. Is the crossover cable connected properly?
4. Is the fuse (F01) blown?

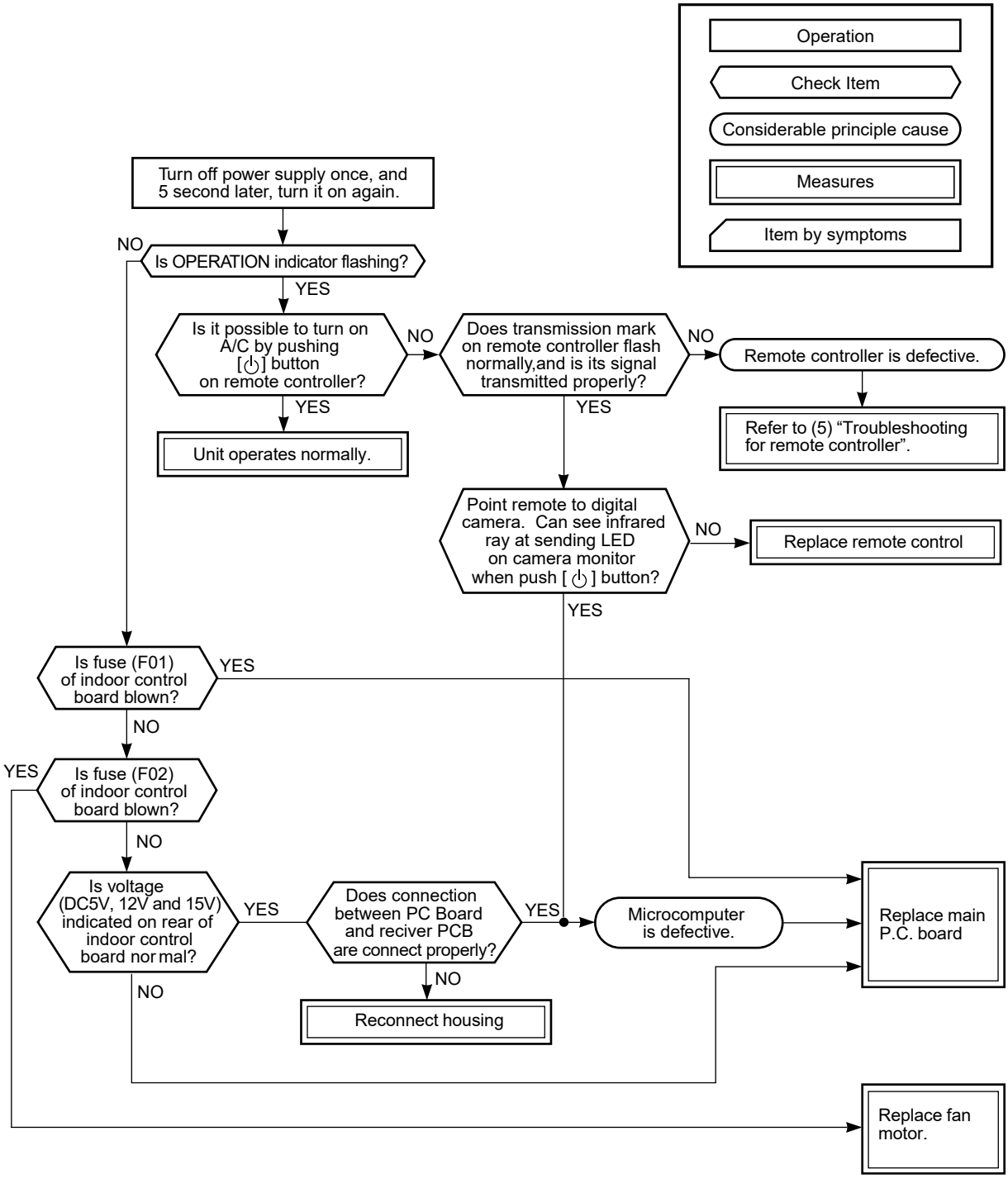

- Be sure to disconnect the motor connector CN36 after shut off the power supply, or it will be a cause of damage of the motor.

(3) Only the indoor motor fan does not operate

<Primary check>

1. Is it possible to detect the power supply voltage (AC220–240V) between ① and ② on the terminal block?
2. Does the indoor fan motor operate in cooling operation?
   (In heating operation, the indoor fan motor does not operate for approximately 10 minutes after it is turned on, to prevent a cold air from blowing in.)

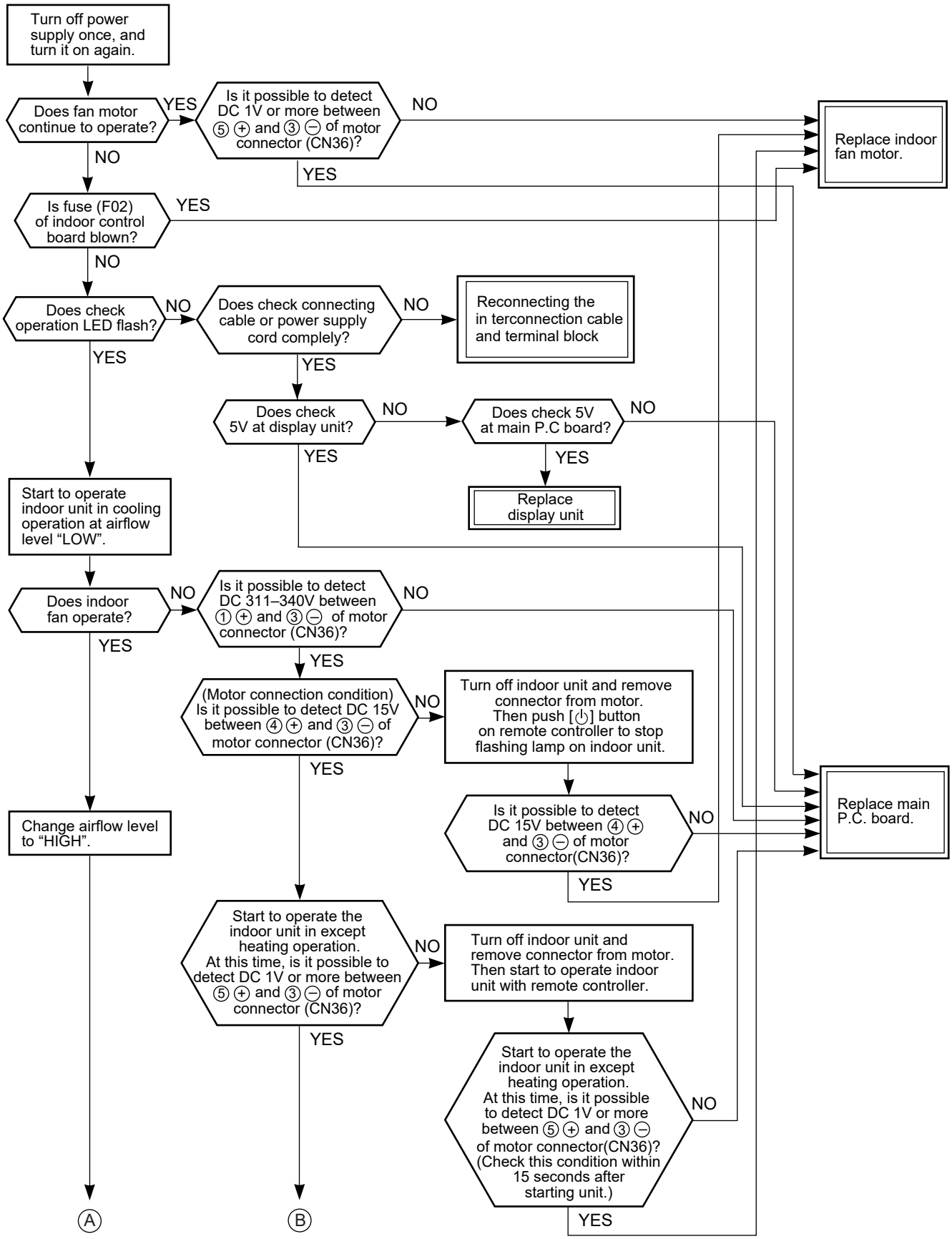

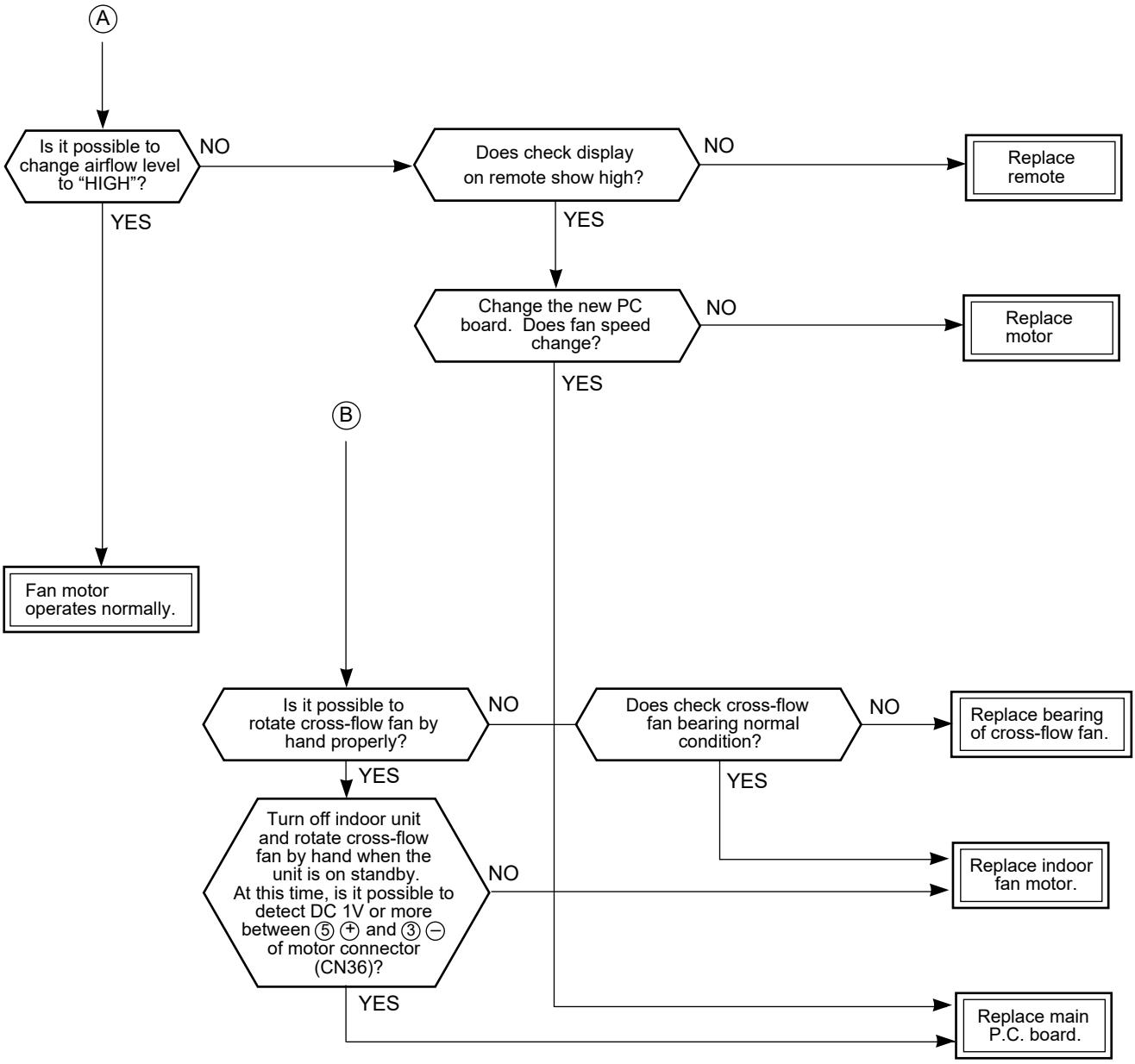
A
Is it possible to change airflow level to “HIGH”?
NO
YES
Does check display on remote show high?
NO
Replace remote
YES
Change the new PC board. Does fan speed change?
NO
Replace motor
YES
Fan motor operates normally.
B
Is it possible to rotate cross-flow fan by hand properly?
NO
YES
Does check cross-flow fan bearing normal condition?
NO
Replace bearing of cross-flow fan.
YES
Turn off indoor unit and rotate cross-flow fan by hand when the unit is on standby. At this time, is it possible to detect DC 1V or more between ⑤ ⊕ and ③ ⊖ of motor connector (CN36)?
NO
Replace indoor fan motor.
YES
Replace main P.C. board.

(4) Indoor fan motor automatically starts to rotate by turning on power supply

[For DC fan motor]

<Cause>

The IC is built in the indoor fan motor. Therefore the P.C. board is also mounted to inside of the motor.
If the P.C. board is soldered imperfectly or the IC is defective, the fan motor may automatically rotate by turning on power supply.

<Inspection procedure>

1. Remove the front panel. (Remove 2 screws.)
2. Remove the cover of the fan motor lead wires.
3. Check DC voltage with CN36 connector while the fan motor is rotating.

NOTE :

- Do not disconnect the connector while the fan motor is rotating.
- Use a thin test rod.

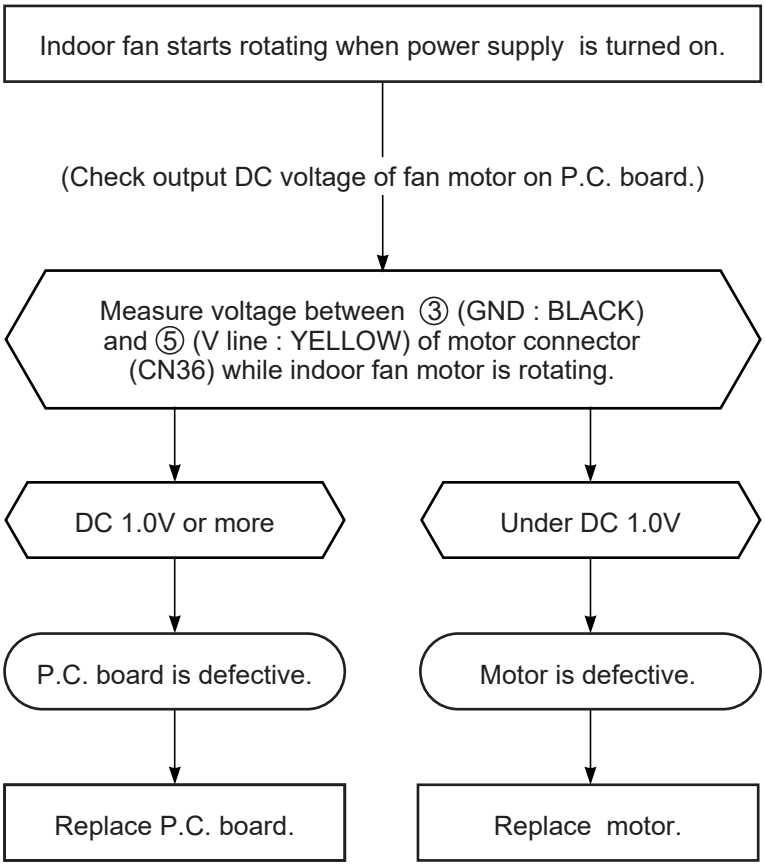

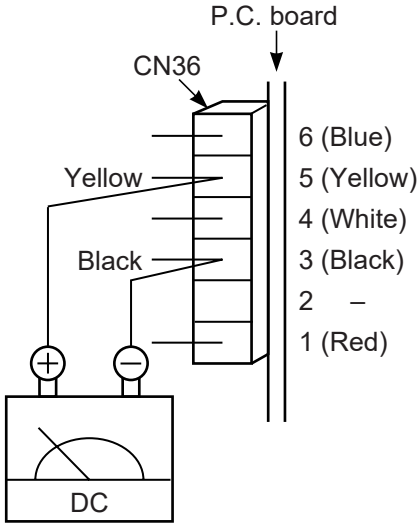

(5) Troubleshooting for remote controller

<Primary check>

Check that A or B selected on the main unit is matched with A or B selected on the remote controller.

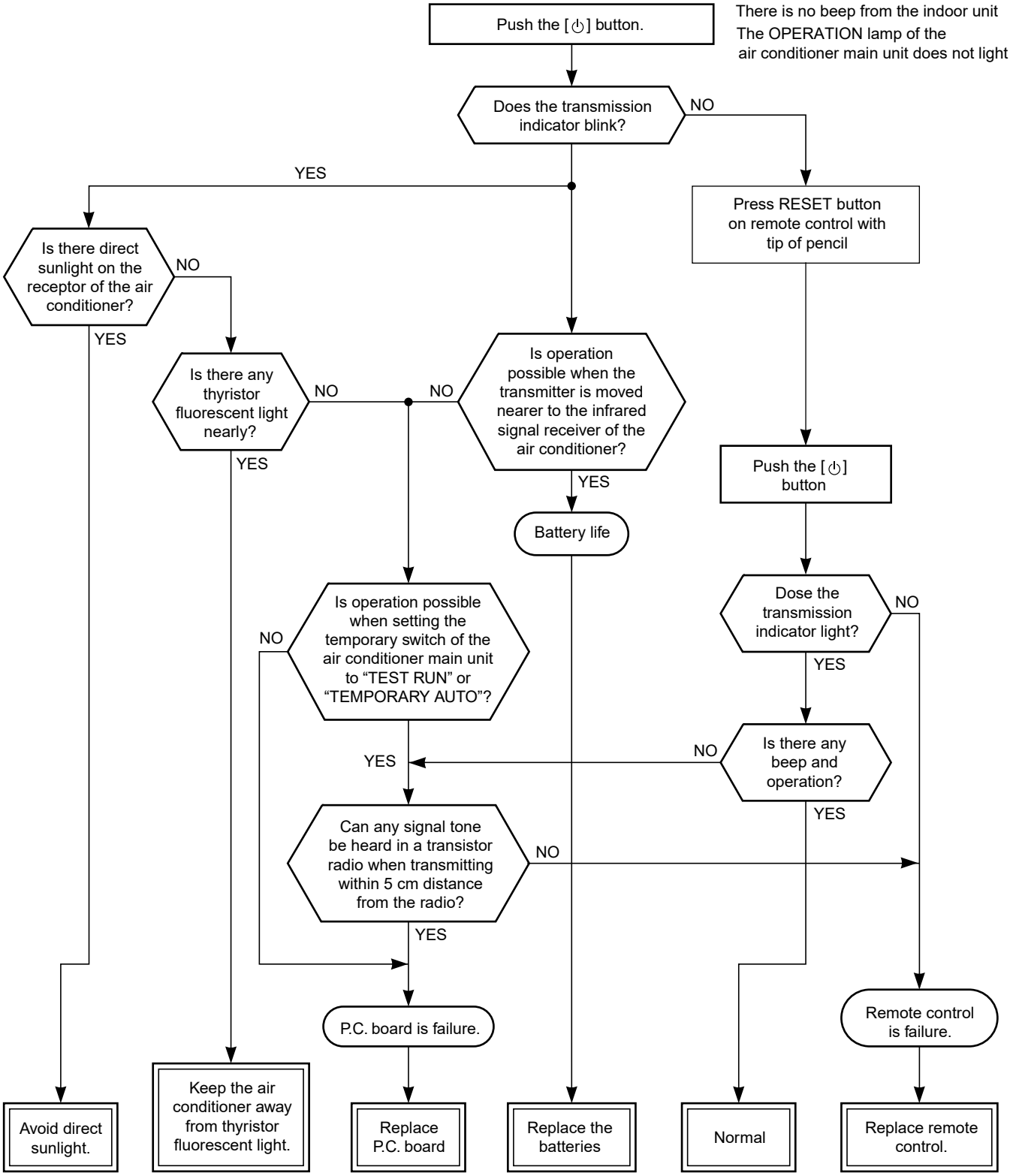

11-5-2. Wiring Failure (Interconnecting and Serial Signal Wire)

(1) Outdoor unit does not operate

1) Is the voltage between ② and ③ of the indoor terminal block varied?
   Confirm that transmission from indoor unit to outdoor unit is correctly performed based upon the following diagram.

NOTE:

- Measurement should be performed 2 minutes and 30 seconds after starting of the operation.
- Be sure to prepare a diode for judgment.

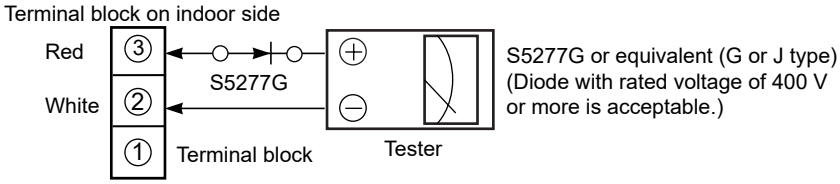

Normal time : Voltage swings between DC15 and 60V. ..... Inverter Assembly check (**11-7-1.**)
Abnormal time : Voltage does not vary.

(2) Outdoor unit stops in a little while after operation started

<Check procedure> Select phenomena described below.

1) The outdoor unit stops 10 to 20 minutes after operation started, and 10 minutes or more are required to restart the unit.

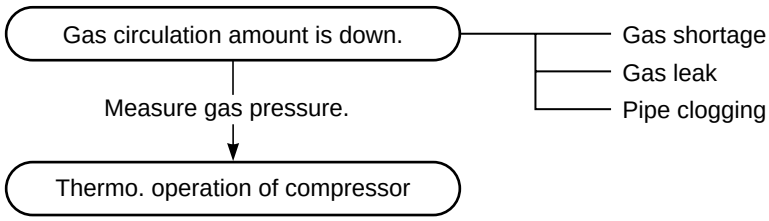

2) If the unit stops once, it does not operate until the power will be turned on again.

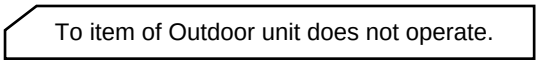

3) The outdoor unit stops 10 minutes to 1 hour after operation started, and an alarm is displayed.
   (Discharge temp. error check code 03, 1E Sensor temp. error check code 02, 1C)

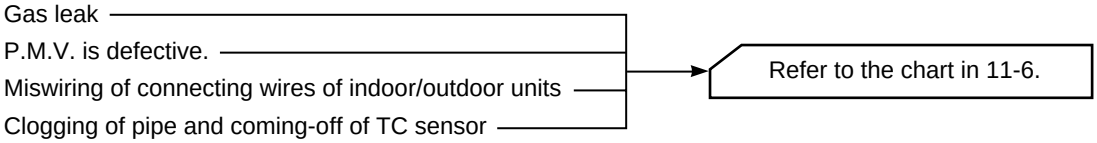

11-6. How to Check Simple the Main Parts

<Check procedure>

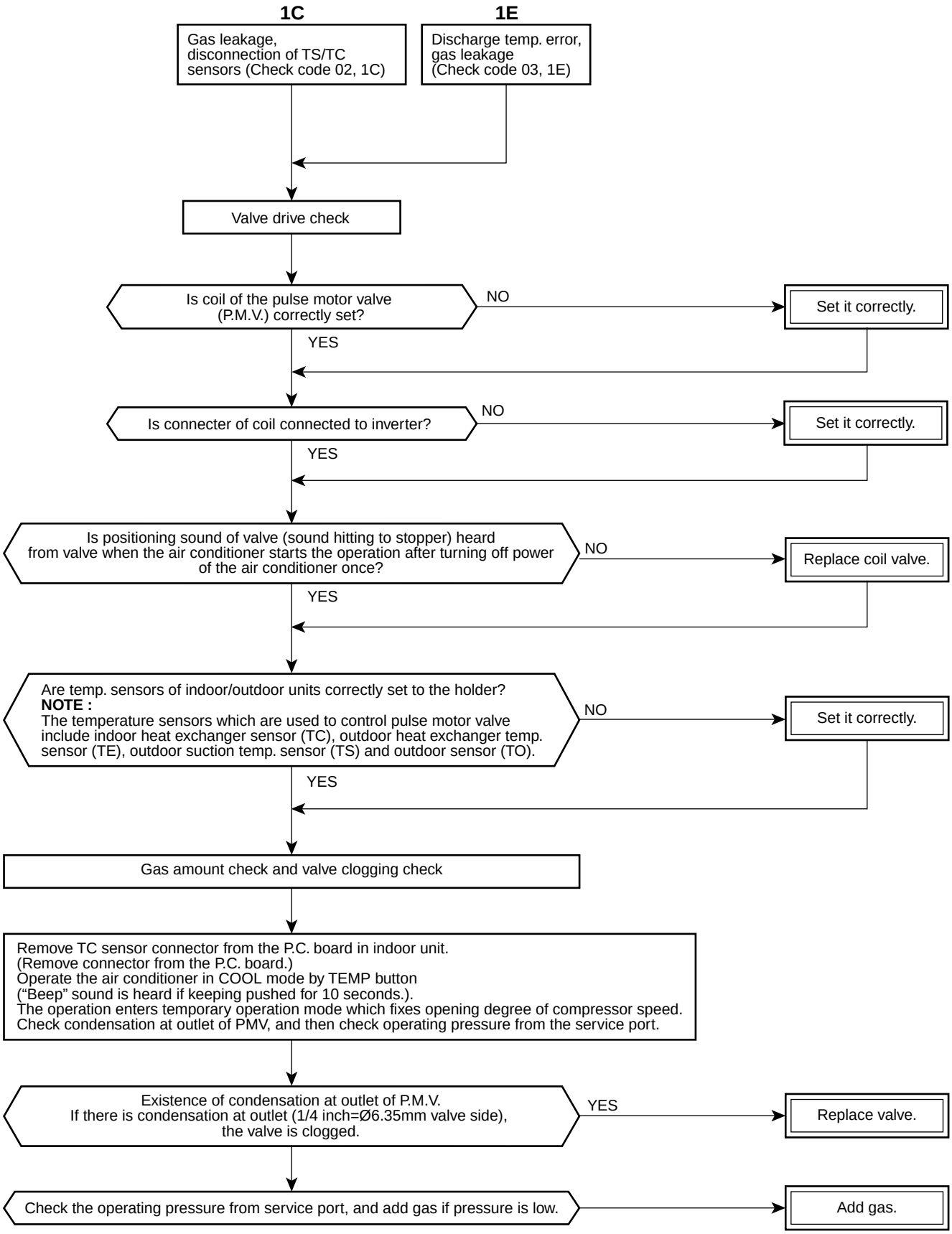

11-7. How to Diagnose Trouble in Outdoor Unit

11-7-1. Summarized Inner Diagnosis of Inverter Assembly

Table 11-7-1

Diagnosis/Process flowchart	Item	Contents	Summary
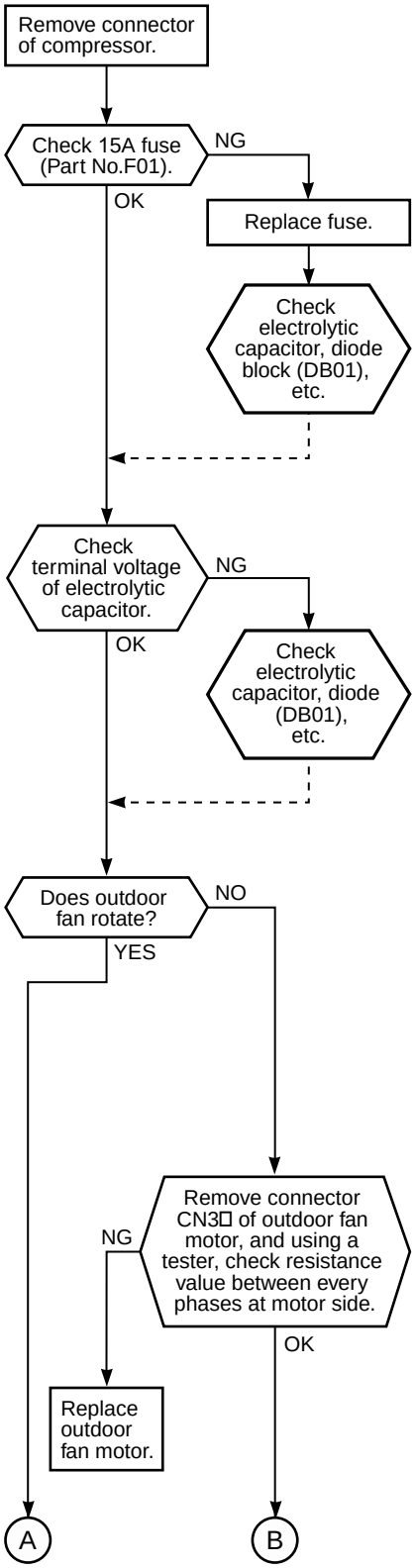	Preparation Check Check Operation Measure-ment Check Stop Check Measure-ment	Turn “OFF” the power supply breaker, and remove 3P connector which connects inverter and compressor. • Check whether 15A fuse on the control board assembly is blown or not.(F01) Turn on the power breaker, and operate the air conditioner in COOL mode by time shortening. Measure terminal voltage of the electrolytic capacity. 760μF:400V After operation, turn off the power breaker after 2 minutes 20 seconds passed, and discharge the electrolytic capacitor by soldering iron. Check voltage between motor phases. • Is not winding between ①-②, ②-③, or ①-③ opened or short-circuited? • Is not frame grounded with ①, ②, or ③?	If fuse was blown, be sure to check the electrolytic capacitor and diode block. (DB01) • Connect discharge resistance (approx. 100Ω, 40W) or soldering iron (plug) between +, – terminals of the electrolytic capacitor (760μF) of C07 (with printed WARNING ELECTRIC SHOCK) on P.C. board. 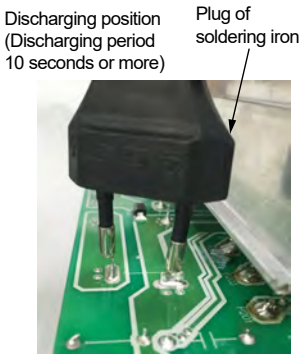 OK if 760μF →DC290 to 400V Remove CN31 while pushing the part indicated by an arrow because CN31 is a connector with lock. 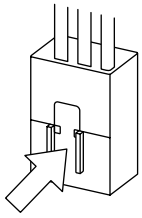 → Resistance between phases should be approx 33.7 ± 1.7Ω → Should be 100MΩ or more.

Diagnosis/Process flowchart	Item	Contents	Summary
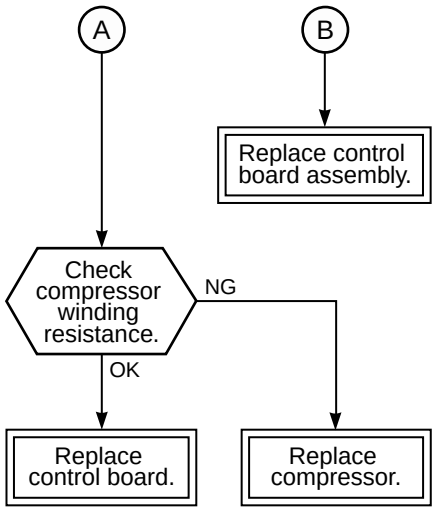	Check	Check winding resistance between phases of compressor, and resistance between outdoor frames by using a tester.	
		• Is not grounded.	→ OK if 20MΩ or more
		• Is not short-circuited between windings.	→ OK if about 2.18Ω
		• Winding is not opened.	→ (Check by a digital tester.)
	Operation	Remove connector CN3□ of the outdoor fan motor, turn on the power supply breaker, and perform the operation. (Stops though activation is prompted.) Check operation within 2 minutes 20 seconds after activation stopped.	

11-8. How to Check Simply the Main Parts

11-8-1. How to Check the P.C. Board (Indoor Unit)

(1) Operating precautions

1) When removing the front panel or the P.C. board, be sure to shut off the power supply breaker.
2) When removing the P.C. board, hold the edge of the P.C. board and do not apply force to the parts.
3) When connecting or disconnecting the connectors on the P.C. board, hold the whole housing. Do not pull at the lead wire.

(2) Inspection procedures

1) When a P.C. board is judged to be defective, check for disconnection, burning, or discoloration of the copper foil pattern or this P.C. board.
2) The P.C. board consists of the following 2 parts

a. Main P.C. board part :

DC power supply circuit, Indoor fan motor control circuit, CPU and peripheral circuits, buzzer, and Driving circuit of louver.

b. Indication unit of infrared ray receiving infrared ray receiving circuit, LED :

To check defect of the P.C. board, follow the procedure described below.

(3) Check procedures

Table 11-8-1

No.	Procedure	Check points	Causes
1	Turn off the power supply breaker and remove the P.C. board assembly from electronic parts base. Remove the connecting cables from the terminal block.	Check whether or not the fuse (F01) is blown.	Impulse voltage was applied or the indoor fan motor short-circuited.
2	Remove the connector of the motor and turn on the power supply breaker. If OPERATION indicator flashes (once per second), it is not necessary to check steps (1 to 4) in the right next column.	Check power supply voltage : 1. Between Pin 4 of CN30 and CN3□ (AC 220–240V) 2. Between ⊕ and ⊖ of C03 (DC 310–340V) 3. Between 15V and GND 4. Between 12V and GND 5. Between 5V and GND	1. The terminal block or the crossover cable is connected wrongly. 2. The fuse (F01), line filter (L01), resistor (R03), or the diode (DB01) is defective. 3. IC11, IC15, Q102, C117 and T01 are defective. 4. IC11, C109 and T01 are defective. 5. IC11, IC14 and T01 are defective.
3	Push [⏻] button once to start the unit. (Do not set the mode to On-Timer operation.)	Check power supply voltage : 1. Between CN28 and CN31 (DC 15–60V)	IC52 and IC53 are defective.
4	Shorten the restart delay timer and start unit.	Check whether or not all indicators (OPERATION,TIMER, HI-POWER, ECO, Wireless adapter) are lit for 3 seconds and they return to normal 3 seconds later.	The indicators are defective or the housing assembly (CN10) is defective.
5	Push [⏻] button once to start the unit. • Shorten the restart delay timer. • Set the operation mode to COOL. • Set the fan speed level to AUTO. • Set the preset temperature much lower than the room temperature. (The unit (compressor) operates continuously in the above condition.)	1. Check whether or not the compressor operates. 2. Check whether or not the OPERATION indicator flashes.	1. The temperature of the indoor heat exchanger is extremely low. 2. The connection of the heat exchanger sensor is loose. (The connector is disconnected.) (CN62) 3. The heat exchanger sensor and the P.C. board are defective. (Refer to Table 11-4-1.) 4. The main P.C. board is defective.
6	If the above condition (No. 5) still continues, start the unit in the following condition. • Set the operation mode to HEAT. • Set the preset temperature much higher than room temperature.	1. Check whether or not the compressor operates. 2. Check whether or not the OPERATION indicator flashes.	1. The temperature of the indoor heat exchanger is extremely high. 2. The connection of the heat exchanger sensor short-circuited. (CN62) 3. The heat exchanger sensor and the P.C. board are defective. (Refer to Table 11-4-1.) 4. The main P.C. board is defective
7	Connect the motor connector to the motor and turn on the power supply. Start the unit the following condition. • Set the fan speed level to HIGH. (The unit (compressor) operates continuously in the above condition in No. 5.)	1. Check it is impossible to detect the voltage (AC120V or higher voltage) between red and black lead of the motor. 2. The motor does not operate or the fan motor does not rotate with high speed. (But it is possible to receive the signal from the remote controller.) 3. The motor rotates but vibrates strongly.	1. The indoor fan motor is defective. (Protected operation of P.C. board.) 2. The P.C. board is defective. 3. The connection of the motor connector is loose.

11-8-2. P .C . Board Layout

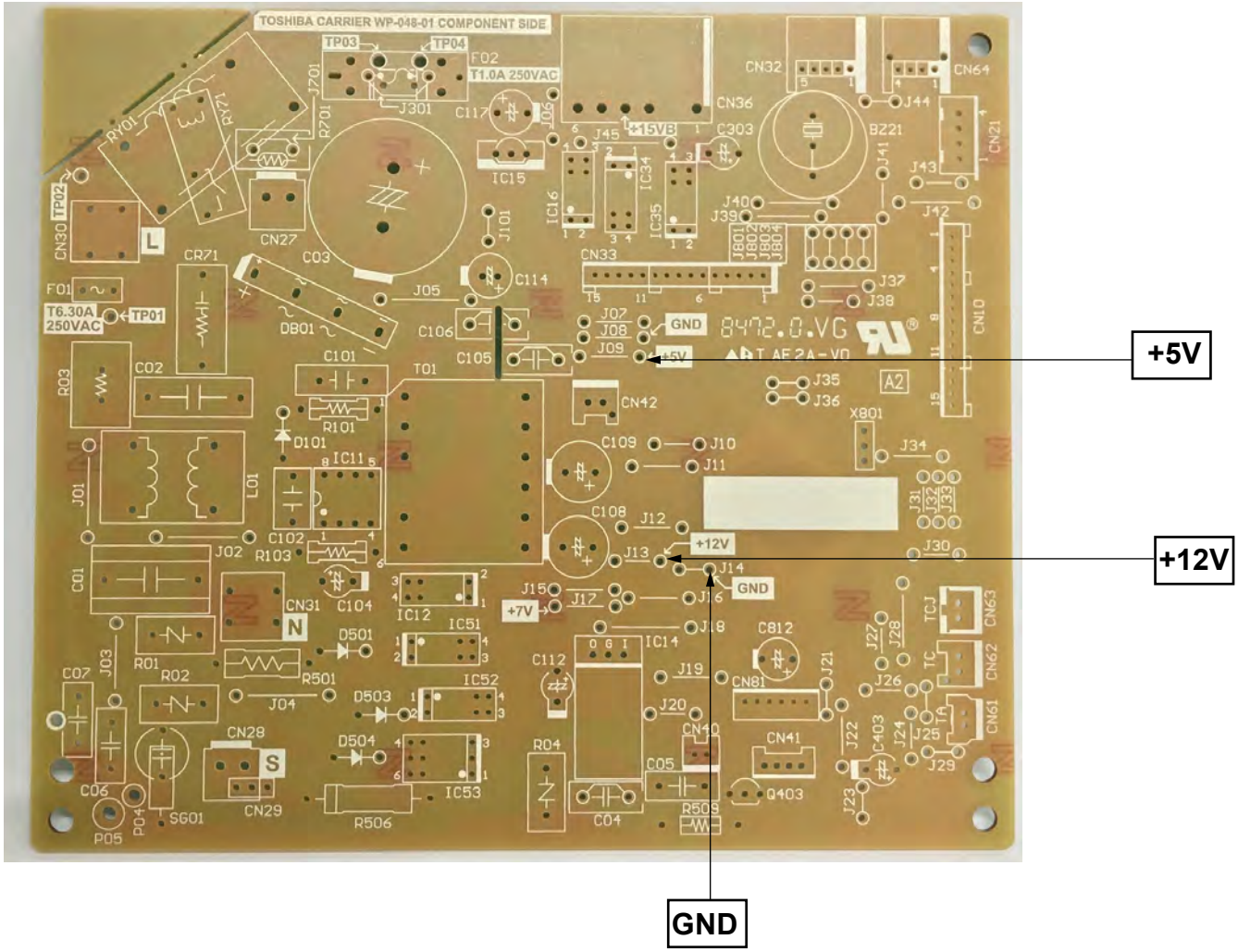

[1] Sensor characteristic table

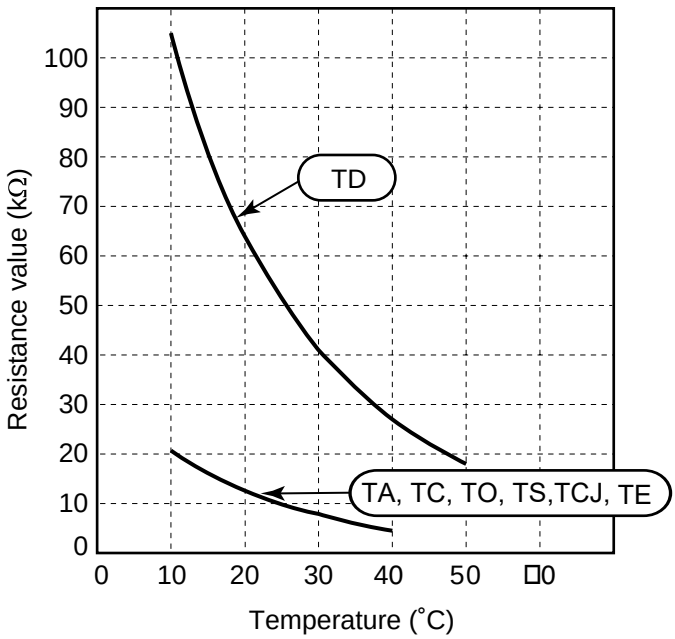

TD	: Discharge temp. sensor
TA	: Room temp. sensor
TC, TCJ	: Heat exchanger temp. sensor
TO	: Outdoor temp. sensor
TS	: Suction temp. sensor
TE	: Outdoor heat exchanger temp sensor

11-8-3. Indoor Unit (Other Parts)

<table>
<tr><th>No.</th><th>Part name</th><th>Checking procedure</th></tr>
<tr><td>1</td><td>Room temp. (TA) sensor
Heat exchanger (TC, TCJ) sensor</td><td>Disconnect the connector and measure the resistance value with tester.
(Normal temp.)
<table>
<tr><th>Sensor \ Temperature</th><th>10°C</th><th>20°C</th><th>25°C</th><th>30°C</th><th>40°C</th></tr>
<tr><td>TA, TC, TCJ (kΩ)</td><td>20.7</td><td>12.6</td><td>10.0</td><td>7.9</td><td>4.5</td></tr>
</table></td></tr>
<tr><td>2</td><td>Remote controller</td><td>Refer to 11-5-1. (5).</td></tr>
<tr><td>3</td><td>Louver motor
24BYJ48-ST</td><td>Measure the resistance value of each winding coil by using the tester.
(Under normal temp. 25°C)
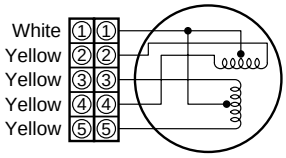

<table>
<tr><th>Position</th><th>Resistance value</th></tr>
<tr><td>1 to 2
1 to 3
1 to 4
1 to 5</td><td>200Ω ± 7%</td></tr>
</table>
at 25°C</td></tr>
<tr><td>4</td><td>Indoor fan motor</td><td>Refer to 11-5-1. (3) and (4).</td></tr>
</table>

11-8-4. Outdoor Unit

<table>
<tr><td>1</td><td>Compressor

Model : KSK75D43UEZA</td><td>Measure the resistance value of each winding by using the tester.
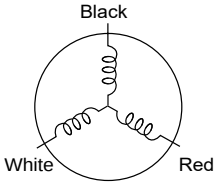

<table>
<tr><th rowspan="2">Position</th><th>Resistance value</th></tr>
<tr><th>KSK75D43UEZA</th></tr>
<tr><td>Red - White</td><td rowspan="3">2.18Ω</td></tr>
<tr><td>White - Black</td></tr>
<tr><td>Black - Red</td></tr>
</table>
at 20°C</td></tr>
<tr><td>2</td><td>Fan motor</td><td>Measure the resistance value of winding by using the tester.
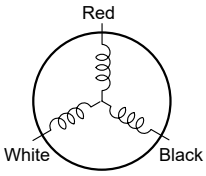

<table>
<tr><th rowspan="2">Position</th><th>Resistance value</th></tr>
<tr><th>WDF-340-A43-1</th></tr>
<tr><td>Red - White</td><td rowspan="3">33.7 ± 1.7Ω</td></tr>
<tr><td>White - Black</td></tr>
<tr><td>Black - Red</td></tr>
</table>
at 20°C</td></tr>
<tr><td>3</td><td>4-Way valve coil</td><td>Measure the resistance value of winding by using the tester.
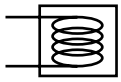
<table>
<tr><td>Model :
DXQ-939</td><td>Resistance value :
1450 ± 150Ω</td></tr>
</table>
at 20°C</td></tr>
<tr><td>4</td><td>Pulse Modulating Valve (PMV) coil

Model : PQ-M10012-000313</td><td>Measure the resistance value of winding by using the tester.
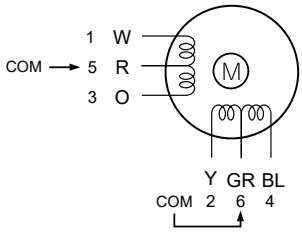

<table>
<tr><th>Position</th><th>Resistance value</th></tr>
<tr><td>Red - White</td><td>42 to 50Ω</td></tr>
<tr><td>Red - Orange</td><td>42 to 50Ω</td></tr>
<tr><td>Gray- Yellow</td><td>42 to 50Ω</td></tr>
<tr><td>Gray- Blue</td><td>42 to 50Ω</td></tr>
</table>
Under 20°C</td></tr>
<tr><td>5</td><td>Outside air temp. sensor (TO)
Discharge temp. sensor (TD)
Suction temp. sensor (TS)
Exchanger temp. sensor (TE)</td><td>Disconnect the connector, and measure resistance value with the tester.
(Normal temperature)
<table>
<tr><th>Sensor \ Temperature</th><th>10°C</th><th>20°C</th><th>30°C</th><th>40°C</th><th>50°C</th></tr>
<tr><td>TD (kΩ)</td><td>105</td><td>64</td><td>41</td><td>27</td><td>18</td></tr>
<tr><td>TO, TS, TE (kΩ)</td><td>20.7</td><td>12.6</td><td>7.9</td><td>4.5</td><td>3.4</td></tr>
</table></td></tr>
</table>

11-8-5. Checking Method for Each Part

<table>
<tr><th>No.</th><th>Part name</th><th>Checking procedure</th></tr>
<tr><td>1</td><td>Electrolytic capacitor</td><td>
1. Turn OFF the power supply breaker.
2. Discharge all three capacitors completely.
3. Check that safety valve at the bottom of capacitor is not broken.
4. Check that vessel is not swollen or exploded.
5. Check that electrolytic liquid does not blow off.
6. Check that the normal charging characteristics are show in continuity test by the tester.
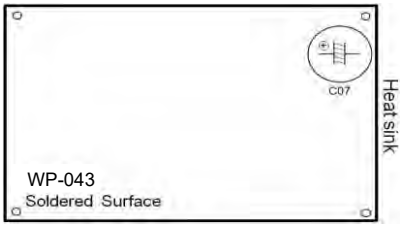

C07 → 760μF/ 400V
<table>
<tr><th>Case that product is good</th></tr>
<tr><td>Pointer swings once, and returns slowly. When performing test once again under another polarity, the pointer should return.</td></tr>
</table>
</td></tr>
<tr><td>2</td><td>Converter module</td><td>
1. Turn OFF the power supply breaker.
2. Discharge all three capacitors completely.
3 Check that the normal rectification characteristics are shown in continuity test by the tester.
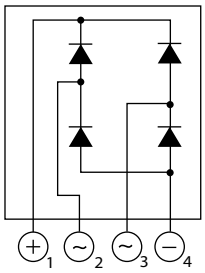

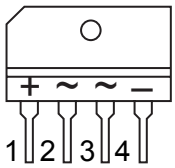

(DB01)
Diode check
<table>
<tr><th colspan="2">Tester rod</th><th>Resistance value in good product</th></tr>
<tr><td>⊕1</td><td>⊖4</td><td rowspan="5">50kΩ or more
(0Ω in trouble)</td></tr>
<tr><td>⊖2</td><td rowspan="2">⊖4</td></tr>
<tr><td>⊖3</td></tr>
<tr><td rowspan="2">⊕1</td><td>⊖2</td></tr>
<tr><td>⊖3</td></tr>
</table>
</td></tr>
</table>

11-9. How to Simply Judge Whether Outdoor Fan Motor is Good or Bad

1. Symptom

- Outdoor fan motor does not rotate.
- Outdoor fan motor stops within several tens seconds though it started rotating.
- Outdoor fan motor rotates or does not rotate according to the position where the fan stopped, etc.

Remote controller check code “02 : Outdoor block, 1A : Outdoor fan drive system error”

2. Cause

The following causes are considered when the outdoor fan motor does not normally rotate.

1) Mechanical lock of the outdoor fan motor
2) Winding failure of the outdoor fan motor
3) Position-detect circuit failure inside of the outdoor fan motor
4) Motor drive circuit failure of the outdoor P.C. board

3. How to simply judge whether outdoor fan motor is good or bad

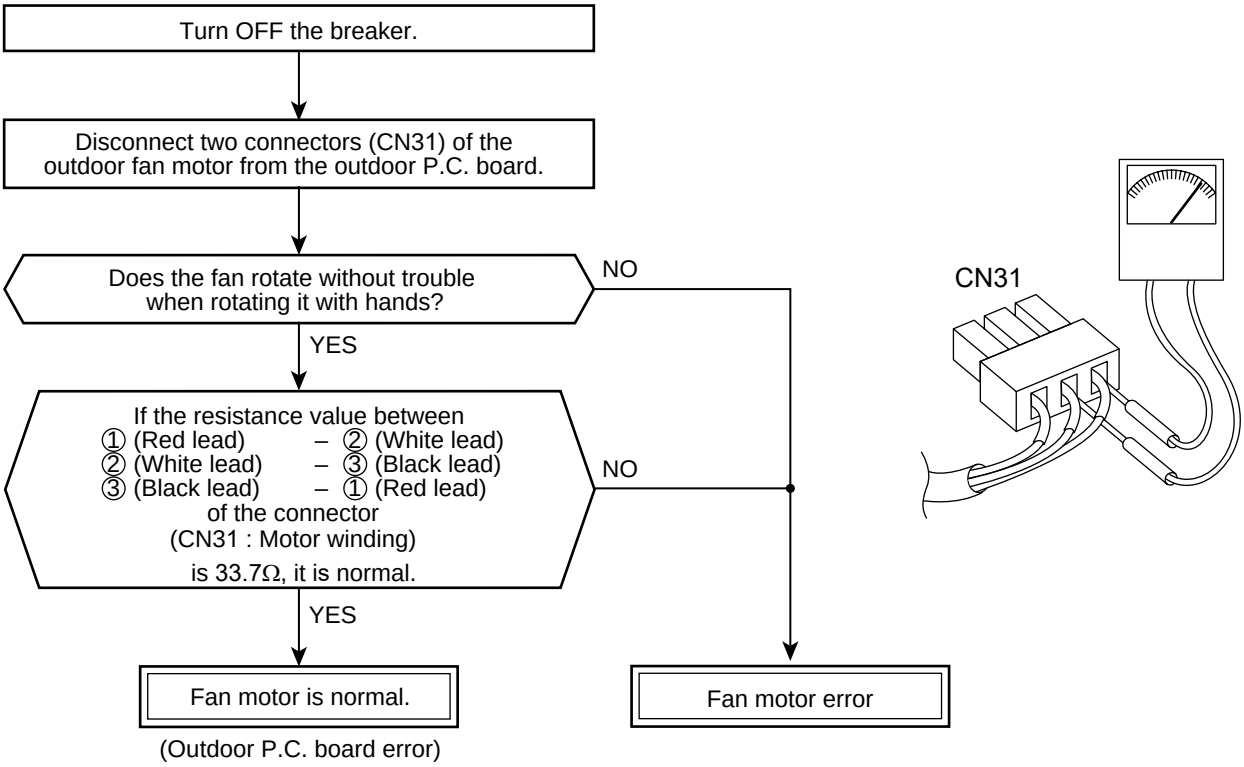

NOTE :

However, GND circuit error inside of the motor may be accepted in some cases when the above check is performed.

When the fan motor does not become normal even if P.C. board is replaced, replace the outdoor fan motor.

12. HOW TO REPLACE THE MAIN PARTS

WARNING

- Since high voltages pass through the electrical parts, turn off the power without fail before proceeding with the repairs.
  Electric shocks may occur if the power plug is not disconnected.
- After the repairs have been completed (after the front panel and cabinet have been installed), perform a test run, and check for smoking, unusual sounds and other abnormalities.
  If this check is omitted, a fire and/or electric shocks may occur.
  Before proceeding with the test run, install the front panel and cabinet.
- Ensure that the following steps are taken when doing repairs on the refrigerating cycle.
  1. Do not allow any naked flames in the surrounding area.
     If a gas stove or other appliance is being used, extinguish the flames before proceeding.
     If the flames are not extinguished, they may ignite any oil mixed with the refrigerant gas.
  2. Do not use welding equipment in an airtight room.
     Carbon monoxide poisoning may result if the room is not properly ventilated.
  3. Do not bring welding equipment near flammable objects.
     Flames from the equipment may cause the flammable objects to catch fire.
- **If keeping the power on is absolutely unavoidable while doing a job such as inspecting the circuitry, wear rubber gloves to avoid contact with the live parts.**
  Electric shocks may be received if the live parts are touched.
  High-voltage circuits are contained inside this unit.
  Proceed very carefully when conducting checks since directly touching the parts on the control circuit board may result in electric shocks.

12-1. Indoor Unit

No.	Part name	Procedures	Remarks
①	Air inlet grille	1) Stop operation of the air conditioner and turn off its main power supply. 2) Open the air inlet grille and push it up until the air inlet grille take off. **<Remark>** If you do not have enough space for push the air inlet grille up until it take off, you can push the arms of air inlet grille toward the outside, and remove the air inlet grille. 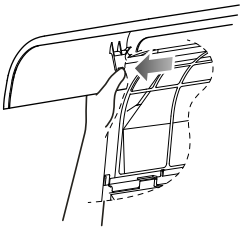	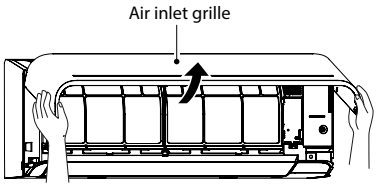
②	Air filters	1) Follow to the procedure in the item ①. 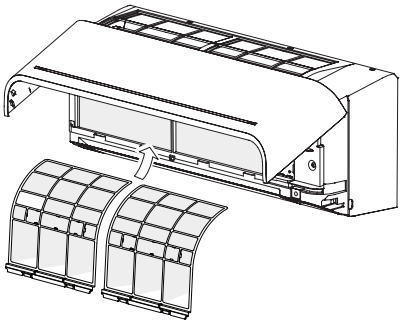 2) Remove the left and the right air filters from the front panel.	

No.	Part name	Procedures	Remarks
③	Front panel	1) Stop operation of the air conditioner and turn off its main power supply. 2) Open two screw caps and securely remove screws (2 pcs.) at the front panel. 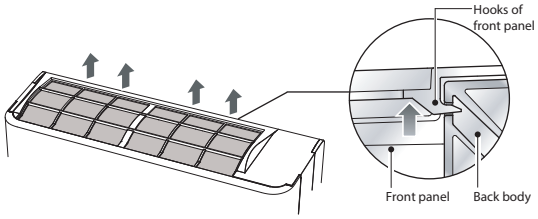 3) Take off the hooks of front panel from top side of the back body. 4) Slightly open the lower part of the front panel then pull the upper part of the front panel toward you to remove it as shown on figure.	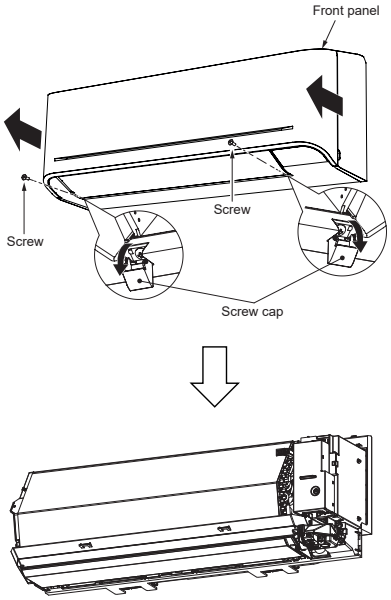
④	Electric part box assembly	1) Follow the procedure item③. 2) Remove screw holding the electric part cover. 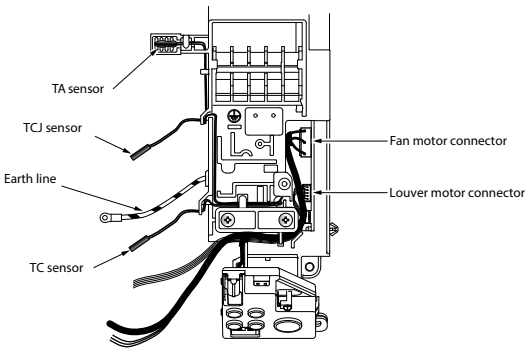 3) Disconnect the connectors for the fan motor and louver motor from P.C. board assembly. 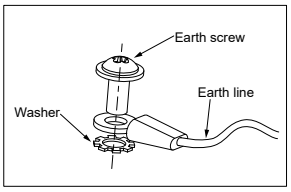 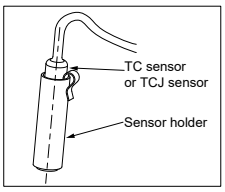 4) Remove the earth screw and earth line from evaporator. 5) Pull out TC and TCJ sensor from sensor holder of the evaporator. 6) Remove the 2 fixing screws that secures the electric parts box assembly, unit display assembly and remove the electric parts box assembly.	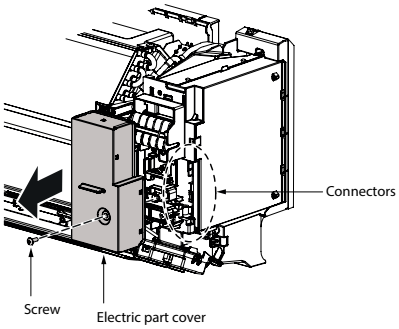 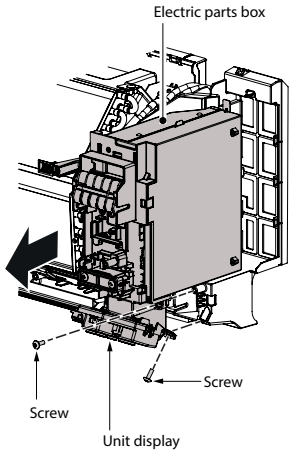

No.	Part name	Procedures	Remarks
⑤	Horizontal louver	1) Remove shaft of the horizontal louver from the back body. (First remove 2 the center shafts then remove the other shafts.)	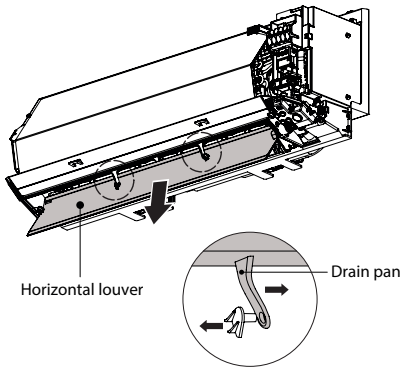
⑥	Fan motor	1) Follow the procedure item ③and④. 2) Loosen the set screw of the cross flow fan. 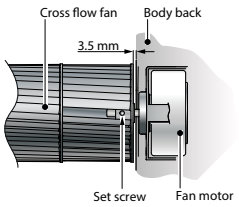 3) Remove 2 fixing screws of the motor band. 4) Pull the motor band and the fan motor outward. **<To re-installation>** - Check the type name of fan motor. - Keep connector position and arrange fan motor wires follow figure. 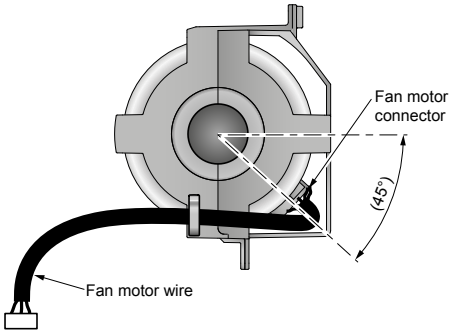	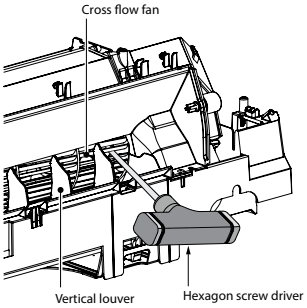 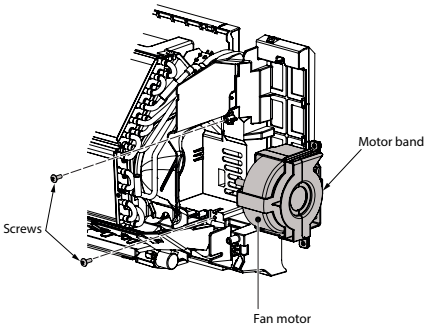

No.	Part name	Procedures	Remarks
⑦	Drain pan assembly	1) Follow the procedure item ③. 2) Remove screw holding the electric part cover. 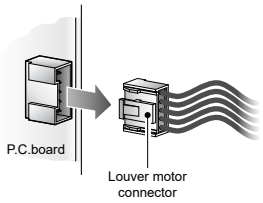 3) Disconnect the louver motor connector (5P) from P.C. board assembly. 4) Remove fixing screws of the unit display and remove unit display. 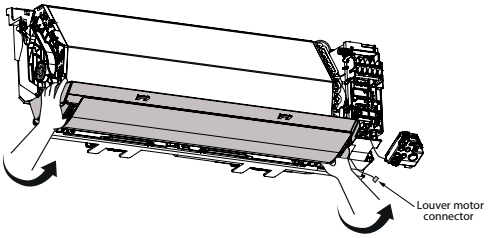 5) Remove the drain pan from the back body. **<To re-installation>** - Press the drain pan into the back body - Please make sure ribs of drain pan in left and right side must be install to lock position. - Press the center arm of drain pan to back body.	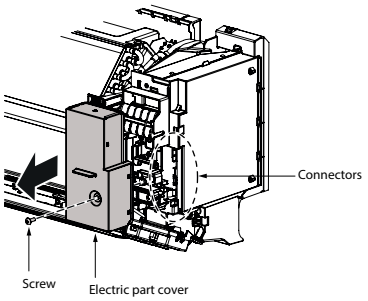 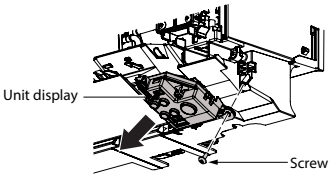 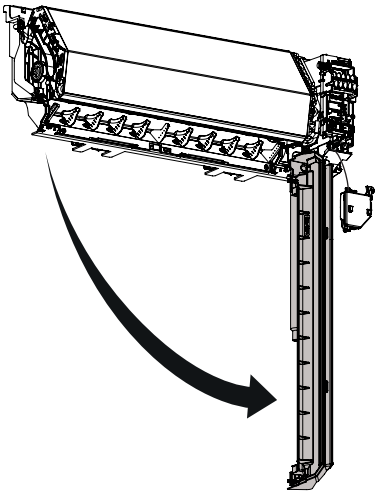

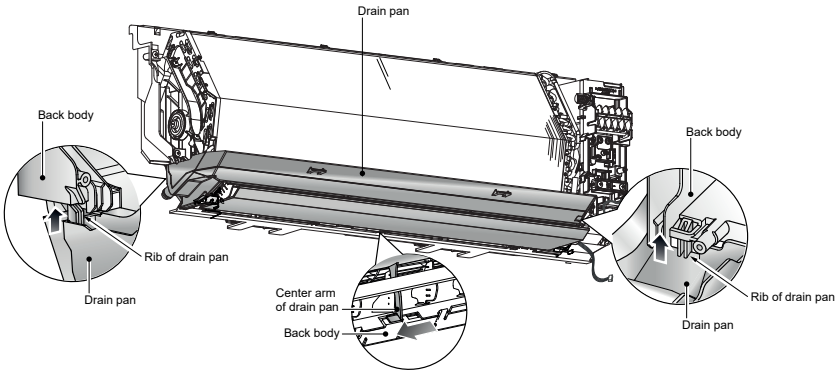

No.	Part name	Procedures	Remarks
⑧	Drain hose	1) Follow the procedure item ③. 2) The drain hose can be removed by removing the screw securing the drain hose and then pulling out the drain hose. 3) When removing the drain hose, be careful of any sharp edges of steel plate. The edges can injuries. 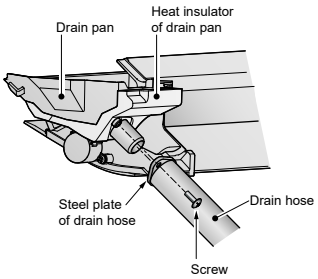 **<To re-installation>** - To install the drain hose, insert the drain hose firmly until the connection part contacts with heat insulator, and then secure it with original screw.	
⑨	Vertical louver assembly	1) Follow the procedure item ③and ⑦. 2) Remove 2 fixing screws from the base vertical louver then remove the vertical louver assembly from the body back.	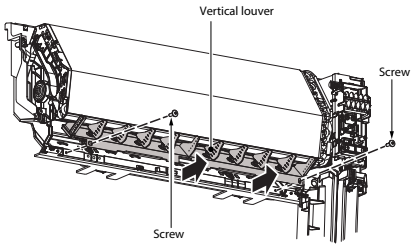

No.	Part name	Procedures	Remarks
⑩	Cross flow fan	1) Follow the procedure item③and④. 2) Loosen the set screw of the cross flow fan. 3) Remove 4 fixing screws from the bearing base then remove it from the main unit. 4) Lift up the heat exchanger follow the figure. Pull out the left hand side until the cross flow fan is released from the shaft of the fan motor and then pull out the lower side of heat exchanger follow the figure. **<To re-installation>** 1) To incorporate the fan motor and the motor into the position in the following figure. - Install the cross flow fan so that the right end of the 1st joint from the right of the Cross flow fan is keep 3.5mm from closed wall of the main unit. 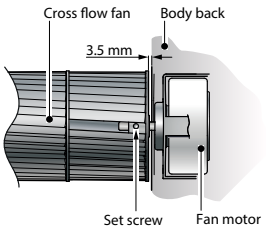 - Holding the set screw, install the cross flow fan so that flat area on shaft of the fan motor comes to the mounting hole of the set screw.	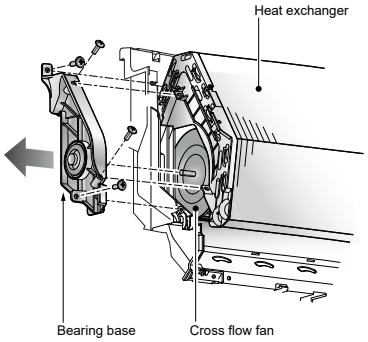 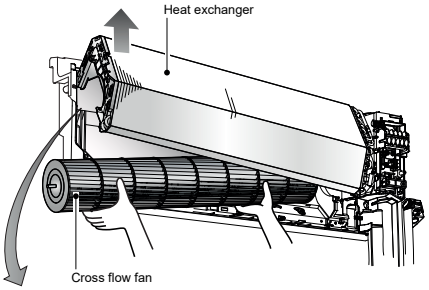

No.	Part name	Procedures	Remarks
⑪	Heat exchanger (Evaporator)	1) Follow the procedure in item③and④. 2) Remove 2 fixing screws at the left side of the heat exchanger. 3) Remove fixing screw at the upper right side of the heat exchanger. 4) Remove the pipe holder from the rear side of the main unit. 5) Pull out the right hand side until the locking slot of heat exchanger is released from the hook of the motor cover then pull out the upper side of heat exchanger. 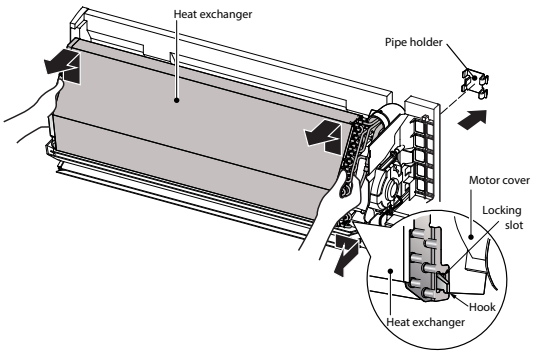 **<To re-installation>** - Please make sure that the hook of motor cover must be installed into the locking slot of heat exchanger. 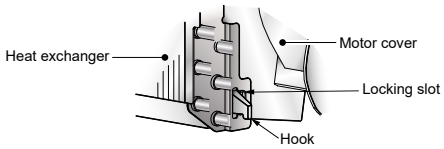 	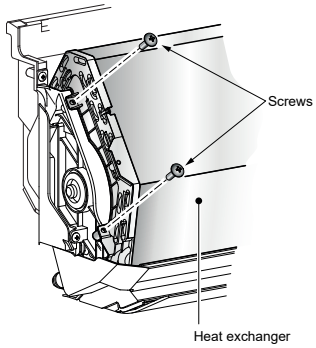 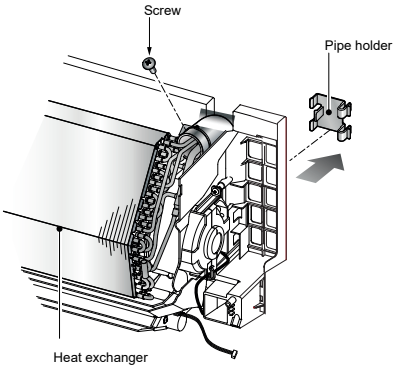

Microcomputer

No.	Part name	Procedure	Remarks
①	Common procedure	1) Turn the power supply off to stop the operation of air-conditioner. 2) Remove the front panel. • Remove the 2 fixing screws. 3) Remove the electrical part base.	Replace terminal block, microcomputer ass'y and the P.C. board ass'y.

12-2. Outdoor Unit

No.	Part name	Procedures	Remarks
①	Common procedure	**1. Detachment** 1) Stop operation of the air conditioner, and turn off the main switch and breaker of the air conditioner. 2) Remove the valve cover. (ST2T∅4 x 10L 1 pc) • After removing screw, remove the valve cover pulling it downward. 3) Remove the wiring cover (ST2T∅4 x 10L 2 pcs.), and then remove the power cord, connecting cable, and cord clamp (ST2T∅4 x 16L 3 pcs.). 4) Remove the upper cabinet. (ST2T∅4 x 10L 5 pcs.) • After removing screws, remove the upper cabinet pulling it upward. 2) **Attachment** 1) Attach the upper cabinet. (ST2T∅4 x 10L 5 pcs.) • Hook the rear side of the upper cabinet to the claw of the front cabinet, and then place it on the front cabinet. 2) After connecting the power cord and connecting cable, attach the cord clamp and wiring cover. • Put the wiring cover into the front cabinet, and insert the claw which has been hooked to the lower part into the square hole, and then fix it with screw. (ST2T∅4 x 10L 2 pc.) 3) Attach the valve cover. (ST2T∅4 x 10L 1 pc.) • Insert the upper part to the front cabinet, set the hook claw of the valve cover to square holes (at three positions) of the main unit, and attach it pushing upward.	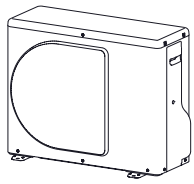 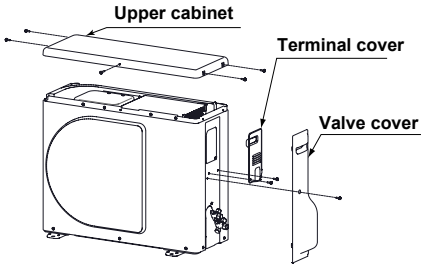 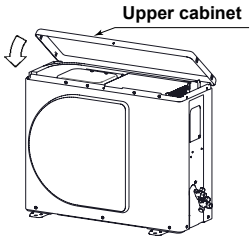
②	Front cabinet	**1. Detachment** 1) Perform work of item 1 of ①. 2) Remove upper screw (ST2T∅4 x 10L 4 pcs.) of the front cabinet, and lower screws (ST2T∅4 x 10L 8 pcs.) of the front cabinet. • Both side of front cabinet envelop the unit, so remove it by pulling sideward. 3) **Attachment** 1) Assemble front cabinet to the unit. 2) Attach the removed screws to the original positions.	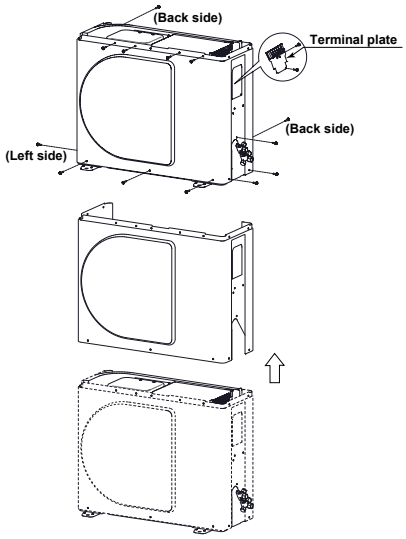

No.	Part name	Procedure	Remarks
③	Inverter assembly	1) Perform work of item 1 in ①. 2) Remove screw (ST2TØ4×10L 2 pcs.) of the upper part of the front cabinet. • Disconnect connectors all connector on P.C. board. • Take off P.C. board out from spacer under P.C. board. • If there is no space above the unit, perform work of 1 in ②. **Be careful to check the inverter because high-voltage circuit is incorporated in it.** 3) Perform discharging by connecting ⊕, ⊖ polarity by discharging resistance (approx. 100Ω40W) or plug of soldering iron to ⊕, ⊖ terminals a of the C07 (printed "CAUTION HIGH VOLTAGE" is attached.) electrolytic capacitor (760μF) on P.C. board. **Be careful to discharge the capacitor because the electrolytic capacitor cannot naturally discharge and voltage remains according to trouble type in some cases.** **NOTE** **This capacitor is one with mass capacity. Therefore, it is dangerous that a large spark generates if short-circuiting between ⊕, ⊖** 4) Remove screw (ST2TØ4 x 10L 4pcs.) fixing the terminal part of inverter box to the main body. 5) Remove the front cabinet by performing step 1 in ② , and remove the fixing screws (ST2TØ4 x 10L) for securing the main body and inverter box. 6) Disconnect connectors of various lead wires. **Requirement** **As each connector has a lock mechanism, avoid to remove the connector by holding the lead wire, but by holding the connector.**	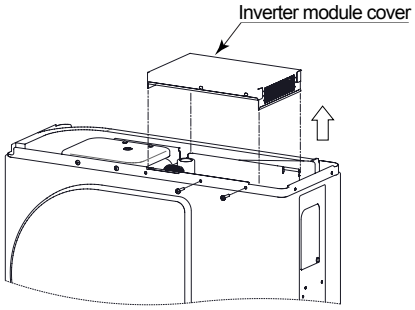 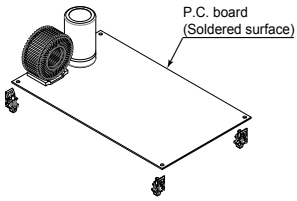 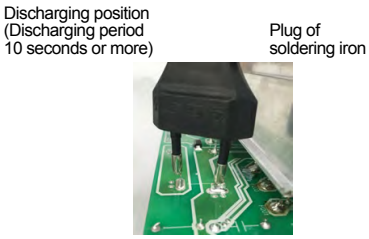 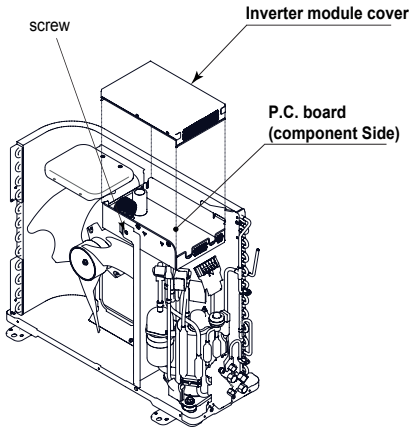 The connector is one with lock, so remove it while pushing the part indicated by an arrow. 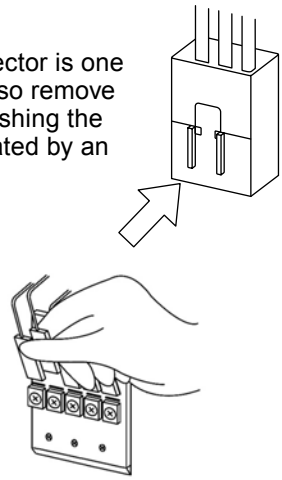 Be sure to remove the connector by holding the connector, not by pulling the lead wire.

No.	Part name	Procedures	Remarks
④	Fan motor	1) Perform work of item 1 of ① and 1 of ②. 2) Remove the flange nut fixing the fan motor and the propeller fan. • Flange nut is loosened by turning clockwise. (To tighten the flange nut, turn counter-clockwise.) 3) Remove the propeller fan. 4) Disconnect the connector for the fan motor from the inverter. 5) Remove the fixing screws (4 pcs.) holding the fan motor by hand so that it does not fall. 6) Cut the motor lead at the point which is 100 mm apart from the connector toward the fan. 7) Use the connector used for the inverter, and pinch the lead wires using the closed end splice.	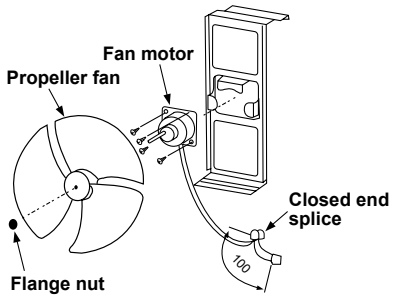
⑤	Compressor	1) Perform work of item 1 of ①, 1 of ② and ③. 2) Extract refrigerant gas. 3) Remove the partition board. (ST2T∅4 x 10L 3 pcs.) 4) Remove the sound-insulation material. 5) Remove the terminal cover of the compressor, and disconnect the lead wire of the compressor thermo and the compressor from the terminal. 6) Remove the pipe connected to the compressor with a burner. • Make sure the flame does not touch the 4 way valve. 7) Remove the fixing screw of the base plate and heat exchanger. (ST2T∅4 x 10L 2 pcs.) 8) Pull upward the refrigeration cycle. 9) Remove the nut fixing the compressor to the base plate.	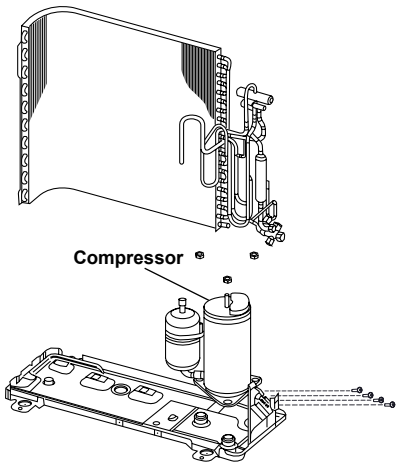

No.	Part name	Procedures	Remarks
⑥	Fan guard	**1. Detachment** 1) Perform work of item 1 of ① and 1 of ②. **Requirement:** **Perform the work on a corrugated cardboard, cloth, etc. to prevent scratches to the product.** 2) Remove the front cabinet, and place it down so that the fan guard side faces downwards. 3) Remove the hooking claws by pushing a minus screwdriver according to the arrow mark in the right figure, and remove the fan guard. **2. Attachment** 1) Insert the claws of the fan guard in the hole of the front cabinet. Push the hooking claws (8 positions) by your hand and fix the claws. **Requirement:** **This completes all the attaching work. Check that all the hooking claws are fixed to the specified positions.**	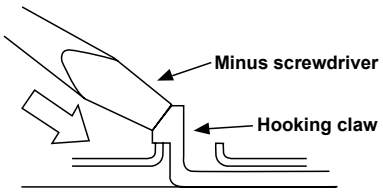
⑦	Pulse Modulating Valve coil	**1. Detachment** 1) Perform work of item 1 of ① and 1 of ② 2) Turn the coil by 180 degrees then remove by pull it upward. **2. Attachment** 1) Insert the coil at position which perpendicular with pipe of PMV then turn the coil by 180 degrees. **Make sure that lead wire of coil is opposite with pipe of PMV**	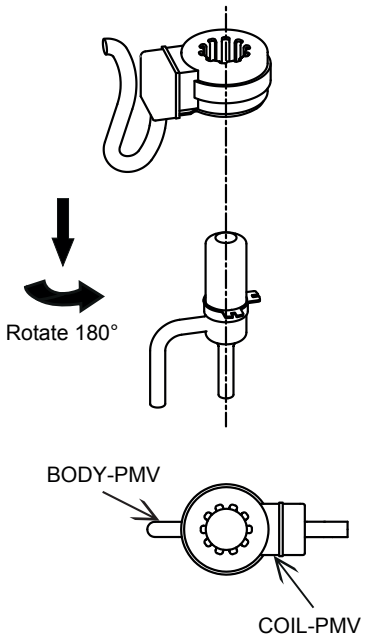

No.	Part name	Procedure	Remarks
⑧	Control board assembly	1. Disconnect the leads and connectors connected to the other parts from the control board assembly. 1) Leads • 3 leads (black, white, orange) connected to terminal block. • Lead connected to compressor : Disconnect the connector (3P). 2) Connectors CN31 : Outdoor fan motor (3P: white)* (* : See **Note**) CN72 : 4-way valve (2P: yellow)* CN61 : TE sensor (2P: white)* CN73 : PMV (6P: white) CN64 : TS sensor (3P: white)* CN62 :TD sensor (3P: white)* CN63 : TO sensor (2P: white) **NOTE** These connectors have a disconnect prevention mechanism: as such, the lock on their housing must be released before they are disconnected. 2. Remove the control board assembly from the spacer. (Remove the heat sink and control board assembly while keeping them screwed together.) 3. Remove the two fixing screws used to secure the heat sink and control board assembly. 4. Mount the new control board assembly. **NOTE** When mounting the new control board assembly, ensure that the P.C. board is inserted properly into the spacer support.	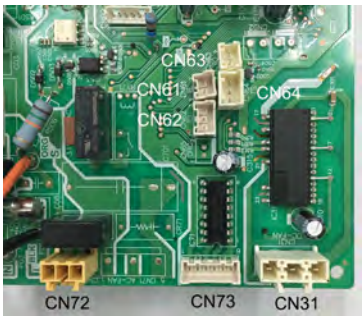 CN31,CN72,CN61,CN73,CN64, CN62 and CN63 are connectors with locking mechanisms: as such, to disconnect them, they must be pressed in the direction of the arrow while pulling them out. 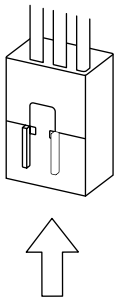

13. EXPLODED VIEWS AND PARTS LIST

13-1. Indoor Unit

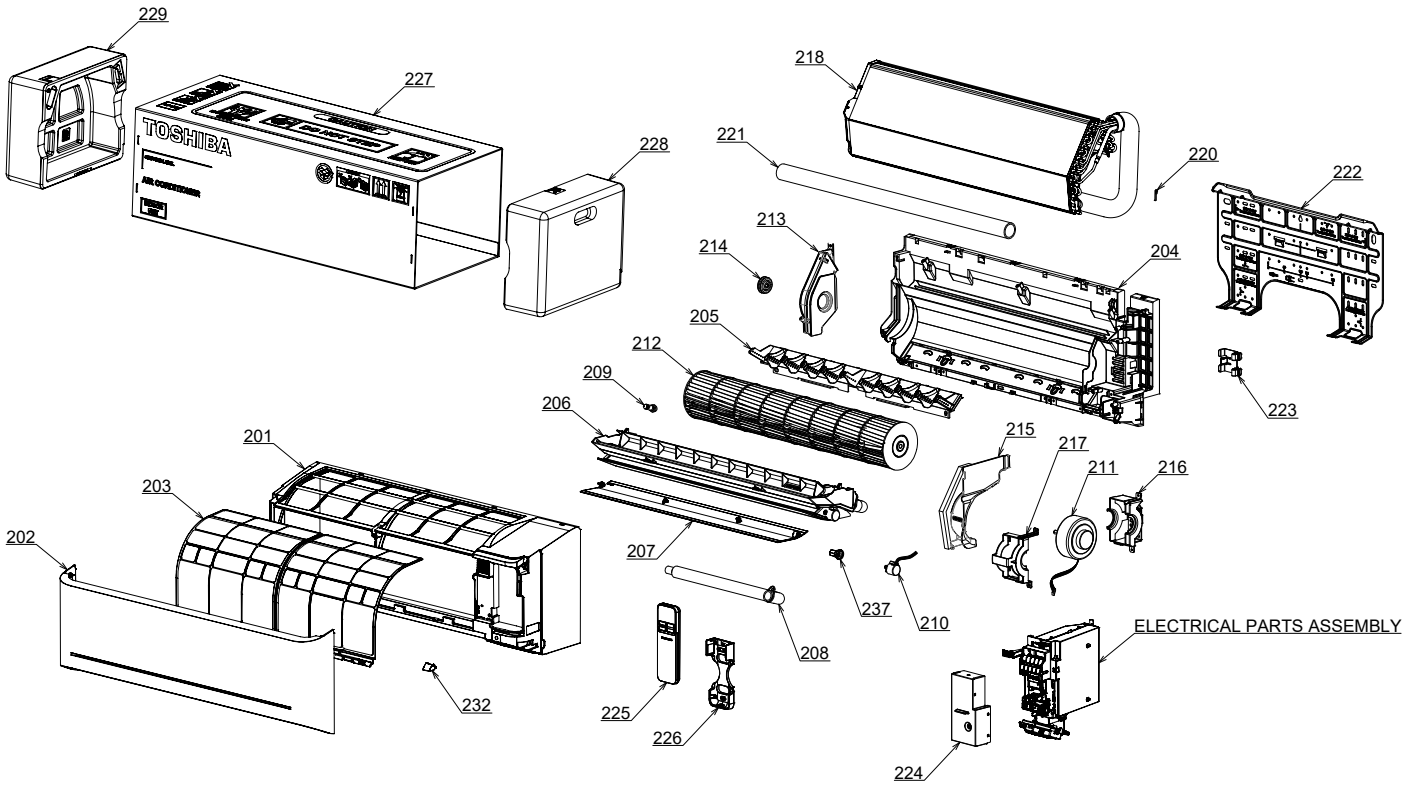

Location No.	Part No.	Description
201	43T00863	FRONT PANEL ASSY
202	43T09613	GRILLE OF AIR INLET ASSY
203	43T80357	AIR FILTER
204	43T03417	BACK BODY ASSY
205	43T22343	VERTICAL LOUVER ASSY
206	43T72357	DRAIN PAN ASSY
207	43T22345	HORIZONTAL LOUVER
208	43T70321	DRAIN HOSE
209	43T79322	DRAIN CAP
210	43T21478	MOTOR; STEPPING
211	43T21543	FAN MOTOR
212	43T20344	CROSS FLOW FAN ASSY
213	43T39365	BASE BEARING
214	43T22312	BEARING ASSY, MOLD
215	43T39364	MOTOR COVER

Location No.	Part No.	Description
216	43T39441	MOTOR BAND BACK ASSY
217	43T39369	MOTOR BAND FRONT
218	43T44830	REFRIGERANT CYCLE ASSEMBLY
220	43T19333	HOLDER, SENSOR
221	43T11341	PIPE-SHIELD
222	43T82332	INSTALLATION PLATE
223	43T49368	PIPE HOLDER
224	43T62360	TERMINAL COVER ASSY
225	43T66433	WIRELESS REMOCO (WH-TG01NE)
226	43T83305	HOLDER, REMOTE CONTROL
227	43T91305	PACKING SLEEVE
228	43T91306	PACKING CUSHION RIGHT
229	43T91307	PACKING CUSHION LEFT
232	4301V149	CAP-SCREW
237	4301V148	COVER-AXIS

13-2. Indoor Unit (Part-E)

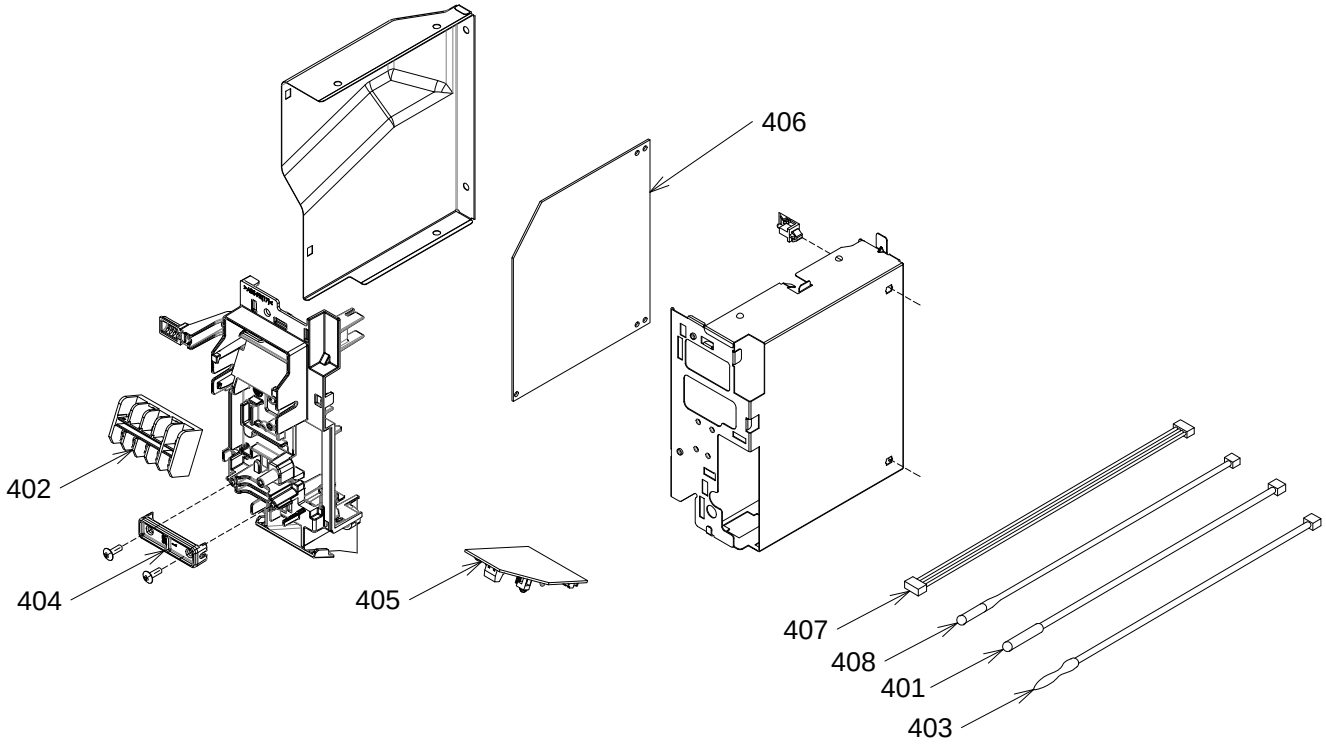

Location No.	Part No.	Description
401	43T50394	TEMPERATURE SENSOR
402	43T6V673	TERMINAL(5P-TF)
403	43T50392	SENSOR,THERMOSTAT
404	43T62340	CORD-CLAMP

Location No.	Part No.	Description
405	43T6W440	PC BOARD ASSY:WRS-LED
406	43TN9935	PC BOARD (WP-048)
407	43T60502	HOUSING-WiFi
408	43T50603	TEMPERATURE SENSOR

13-3. Outdoor Unit

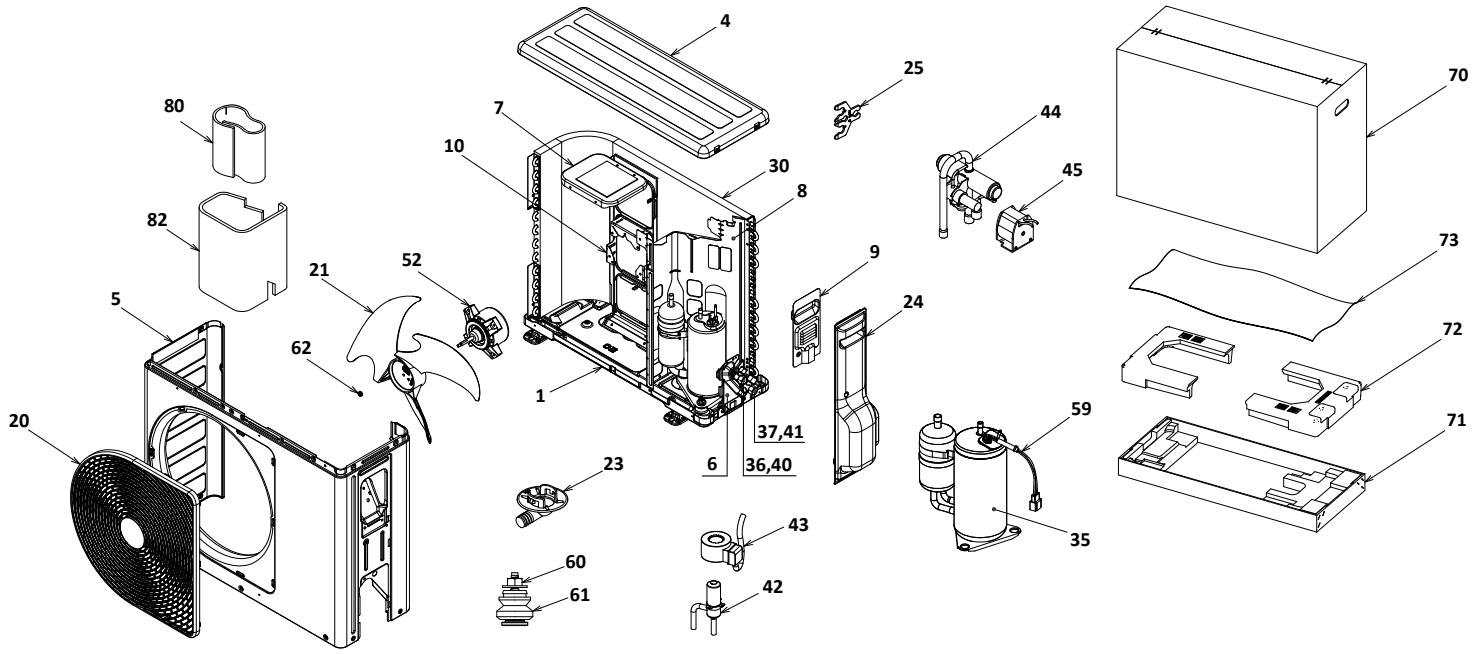

Location No.	Part No.	Description
1	43T42388	BASE PLATE ASSEMBLY
4	43T00734	UPPER CABINET ASSEMBLY
5	43T00683	FRONT CABINET ASSEMBLY
6	43T00448	FIXING PLATE VALVE
7	43T39334	MOTOR BASE CONNECTION PLATE
8	43T04325	PARTITION ASSEMBLY
9	43T62378	TERMINAL COVER ASSEMBLY
10	43T39325	MOTOR BASE
20	43T19363	FAN GUARD
21	43T20324	PROPELLER FAN
23	43T79325	DRAIN NIPPLE
24	43T19337	PACKED VALVE COVER
25	43T63376	HOLDER, SENSOR
30	43T43654	CONDENSER ASSEMBLY
35	43T41533	COMPRESSOR
36	43T47403	BONNET, 6.35 DIA
37	43T47404	BONNET, 9.52 DIA

Location No.	Part No.	Description
40	43T46540	VALVE; PACKED 6.35 DIA
41	43T46541	VALVE; PACKED 9.52 DIA
42	43T46469	BODY PMV
43	43T63360	COIL PMV
44	43T46470	4 WAY VALVE
45	43T63361	4 WAY VALVE COIL
52	43T21460	MOTOR FAN
59	43T60498	LEAD ASSY, COMPRESSOR
60	43T97001	NUT
61	43T49327	RUBBER CUSHION
62	43T47001	NUT FLANGE
70	43T91310	CARTON BOX
71	43T91303	ASM-FBBRD-UD
72	43T91302	CUSHION-PKG-UPR
73	43T91301	PE SHEET
80	43T04458	SOUND INSULATION INSIDE
82	43T04459	SOUND INSULATION OUTSIDE

13-4. Outdoor Unit (Part-E)

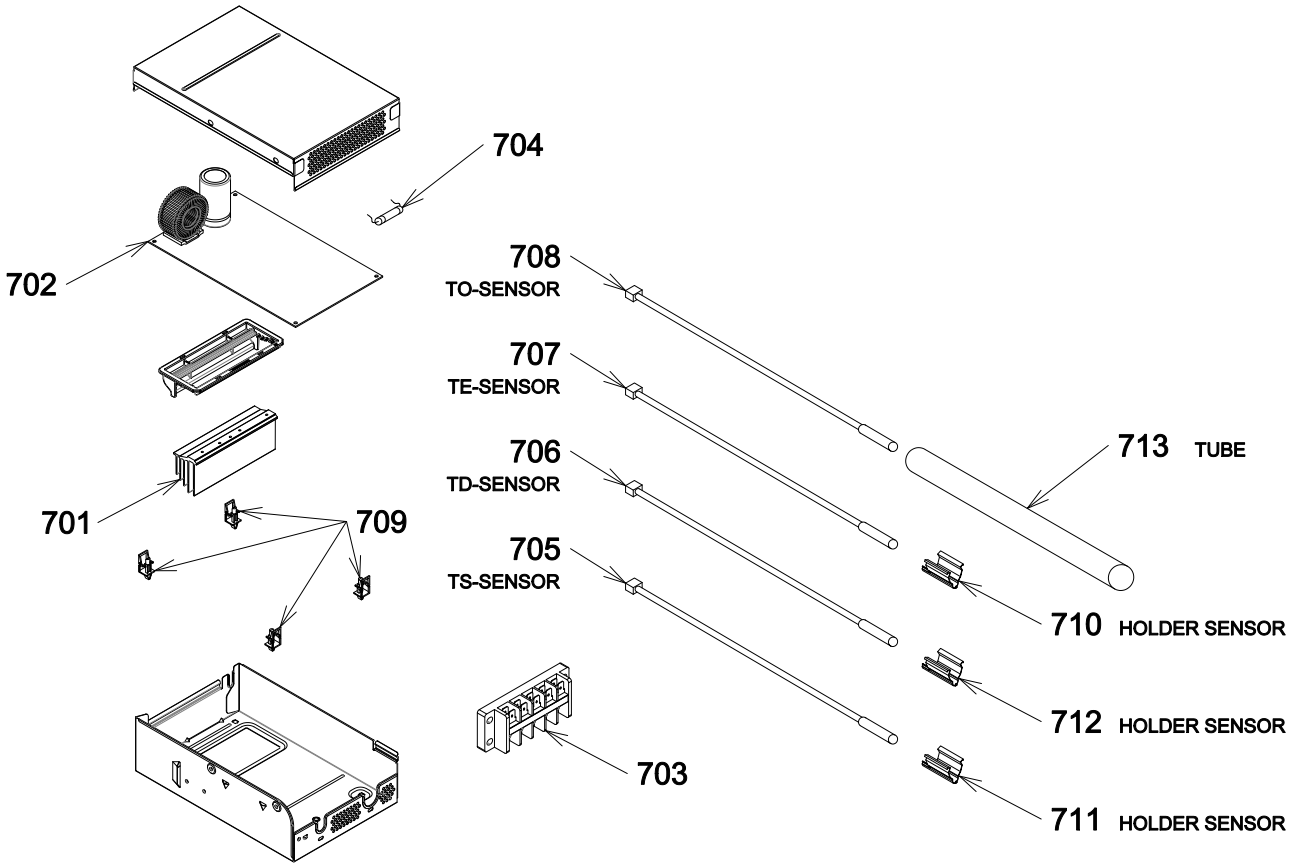

Location No.	Part No.	Description
701	43T67311	HEATSINK
702	43TN9515	PC BOARD (WP-043)
703	43T60392	TERMINAL-5P
704	43T60459	FUSE
705	43T50412	TC-SENSOR
706	43T50334	TEMPERATURE SENSOR
707	43T50352	TEMPERATURE SENSOR

Location No.	Part No.	Description
708	43T50360	TC-SENSOR(TO)
709	43T95304	SPACER-KGES
710	43T63318	HOLDER SENSOR
711	43T63316	HOLDER,SENSOR
712	43T63317	HOLDER,SENSOR
713	43T62401	TUBE

Toshiba Carrier (Thailand) Co., Ltd.

144/9 MOO 5, BANGKADI INDUSTRIAL PARK, TIVANON ROAD, TAMBOL BANGKADI,
AMPHUR MUANG, PATHUMTHANI 12000, THAILAND.