FILE NO. SVM-22013-3

TOSHIBA

AIR CONDITIONER (MULTI TYPE)

SERVICE MANUAL

Indoor unit

<1-way cassette type>

MMU-UP0151YHP-E(TR)
MMU-UP0181YHP-E(TR)
MMU-UP0241YHP-E(TR)
MMU-UP0271YHP-E(TR)

R32 or R410A

Revised on Aug, 2022

CONTENTS

PRECAUTIONS FOR SAFETY 6

1. SPECIFICATIONS 14

2. CONSTRUCTION VIEWS (EXTERNAL VIEWS) 17

3. WIRING DIAGRAMS 18

4. PARTS RATING 19

5. REFRIGERANT CYCLE DIAGRAM 20

6. CONTROL OUTLINE 21

7. COMMUNICATION TYPE, MODEL NAMES AND THE MAXIMUM NUMBER OF CONNECTABLE UNITS 30

7-1. This air conditioning (U series) has new communication specifications, and TU2C-Link (U series) and TCC-Link (other than U series) differ in a communication type. For the communication type and the model names such as each unit or remote controllers, refer to the following table. 30

7-2. If TU2C-Link (U series) is combined with TCC-Link (other than U series), the wiring specifications and the maximum number of connectable indoor units during group control operation will be changed. 30

8. APPLIED CONTROL AND FUNCTIONS (INCLUDING CIRCUIT CONFIGURATION) 31

8-1. Indoor controller block diagram (MCC-1643) 31

8-1-1. In Case of Connection of Wired Remote Controller 31

8-1-2. In Case of Connection of Wireless Remote Controller 32

8-1-3. Connection of Both Wired Remote Controller and Wireless Remote Controller 33

8-2. Indoor Print Circuit Board 34

8-3. Test run of indoor unit 36

8-4. Method to set indoor unit function DN code 40

8-5. Applied control of indoor unit 46

9. TROUBLESHOOTING 65

9-1. Overview 65

9-2. Troubleshooting method 66

9-3. Troubleshooting based on information displayed on remote controller 72

9-4. Check Codes Displayed on Remote Controller and SMMS series Outdoor Unit (7-Segment Display on I/F Board) and Locations to Be Checked 77

9-5. Diagnostic Procedure for Each Check Code (Indoor Unit) 92

9-6. Sensor characteristics 100

9-7. Maintenance list 101

10. P.C. BOARD EXCHANGE PROCEDURES 102

11. DETACHMENTS 109

12. EXPLODED VIEWS AND PARTS LIST 117

Please read carefully through these instructions that contain important information which complies with the “Machinery” Directive (Directive 2006/42/EC), and ensure that you understand them.

Definition of Qualified Installer or Qualified Service Person

The air conditioner must be installed, maintained, repaired and removed by a qualified installer or qualified service person. When any of these jobs is to be done, ask a qualified installer or qualified service person to do them.
A qualified installer or qualified service person is an agent who has the qualifications and knowledge described in the table below.

Agent	Qualifications and knowledge which the agent must have
Qualified installer (*1)	• The qualified installer is a person who installs, maintains, relocates and removes the air conditioners made by Toshiba Carrier Corporation. He or she has been trained to install, maintain, relocate and remove the air conditioners made by Toshiba Carrier Corporation or, alternatively, he or she has been instructed in such operations by an individual or individuals who have been trained and is thus thoroughly acquainted with the knowledge related to these operations. • The qualified installer who is allowed to do the electrical work involved in installation, relocation and removal has the qualifications pertaining to this electrical work as stipulated by the local laws and regulations, and he or she is a person who has been trained in matters relating to electrical work on the air conditioners made by Toshiba Carrier Corporation or, alternatively, he or she has been instructed in such matters by an individual or individuals who have been trained and is thus thoroughly acquainted with the knowledge related to this work. • The qualified installer who is allowed to do the refrigerant handling and piping work involved in installation, relocation and removal has the qualifications pertaining to this refrigerant handling and piping work as stipulated by the local laws and regulations, and he or she is a person who has been trained in matters relating to refrigerant handling and piping work on the air conditioners made by Toshiba Carrier Corporation or, alternatively, he or she has been instructed in such matters by an individual or individuals who have been trained and is thus thoroughly acquainted with the knowledge related to this work. • The qualified installer who is allowed to work at heights has been trained in matters relating to working at heights with the air conditioners made by Toshiba Carrier Corporation or, alternatively, he or she has been instructed in such matters by an individual or individuals who have been trained and is thus thoroughly acquainted with the knowledge related to this work.
Qualified service person (*1)	• The qualified service person is a person who installs, repairs, maintains, relocates and removes the air conditioners made by Toshiba Carrier Corporation. He or she has been trained to install, repair, maintain, relocate and remove the air conditioners made by Toshiba Carrier Corporation or, alternatively, he or she has been instructed in such operations by an individual or individuals who have been trained and is thus thoroughly acquainted with the knowledge related to these operations. • The qualified service person who is allowed to do the electrical work involved in installation, repair, relocation and removal has the qualifications pertaining to this electrical work as stipulated by the local laws and regulations, and he or she is a person who has been trained in matters relating to electrical work on the air conditioners made by Toshiba Carrier Corporation or, alternatively, he or she has been instructed in such matters by an individual or individuals who have been trained and is thus thoroughly acquainted with the knowledge related to this work. • The qualified service person who is allowed to do the refrigerant handling and piping work involved in installation, repair, relocation and removal has the qualifications pertaining to this refrigerant handling and piping work as stipulated by the local laws and regulations, and he or she is a person who has been trained in matters relating to refrigerant handling and piping work on the air conditioners made by Toshiba Carrier Corporation or, alternatively, he or she has been instructed in such matters by an individual or individuals who have been trained and is thus thoroughly acquainted with the knowledge related to this work. • The qualified service person who is allowed to work at heights has been trained in matters relating to working at heights with the air conditioners made by Toshiba Carrier Corporation or, alternatively, he or she has been instructed in such matters by an individual or individuals who have been trained and is thus thoroughly acquainted with the knowledge related to this work.

Definition of Protective Gear

When the air conditioner is to be transported, installed, maintained, repaired or removed, wear protective gloves and 'safety' work clothing.
In addition to such normal protective gear, wear the protective gear described below when undertaking the special work detailed in the table below.
Failure to wear the proper protective gear is dangerous because you will be more susceptible to injury, burns, electric shocks and other injuries.

Work undertaken	Protective gear worn
All types of work	Protective gloves 'Safety' working clothing
Electrical-related work	Gloves to provide protection for electricians Insulating shoes Clothing to provide protection from electric shock
Work done at heights (50 cm or more)	Helmets for use in industry
Transportation of heavy objects	Shoes with additional protective toecap
Repair of outdoor unit	Gloves to provide protection for electricians

The important contents concerned to the safety are described on the product itself and on this Service Manual. Please read this Service Manual after understanding the described items thoroughly in the following contents (Indications / Illustrated marks), and keep them.

[Explanation of indications]

Indication	Explanation
⚠ DANGER	Indicates contents assumed that an imminent danger causing a death or serious injury of the repair engineers and the third parties when an incorrect work has been executed.
⚠ WARNING	Indicates possibilities assumed that a danger causing a death or serious injury of the repair engineers, the third parties, and the users due to troubles of the product after work when an incorrect work has been executed.
⚠ CAUTION	Indicates contents assumed that an injury or property damage (*) may be caused on the repair engineers, the third parties, and the users due to troubles of the product after work when an incorrect work has been executed.

* Property damage: Enlarged damage concerned to property, furniture, and domestic animal / pet

[Explanation of illustrated marks]

Indication	Explanation
⃠	Indicates prohibited items (Forbidden items to do) The sentences near an illustrated mark describe the concrete prohibited contents.
●	Indicates mandatory items (Compulsory items to do) The sentences near an illustrated mark describe the concrete mandatory contents.
△	Indicates cautions (Including danger / warning) The sentences or illustration near or in an illustrated mark describe the concrete cautious contents.

MEANING OF SYMBOLS DISPLAYED ON THE UNIT

	WARNING (Risk of fire)	This mark is for R32 refrigerant only. Refrigerant type is written on nameplate of outdoor unit. In case that refrigerant type is R32, this unit uses a flammable refrigerant. Ir refrigerant leaks and comes in contact with fire or heating part, it will create harmful gas and there is risk of fire.
	Read the OWNER'S MANUAL carefully before operation.	
	Service personnel are required to carefully read the OWNER'S MANUAL and INSTALLATION MANUAL before operation.	
	Further information is available in the OWNER'S MANUAL, INSTALLATION MANUAL, and the like.	

Warning Indications on the Air Conditioner Unit

[Confirmation of warning label on the main unit]

Confirm that labels are indicated on the specified positions
If removing the label during parts replace, stick it as the original.

Warning indication	Description
WARNING **ELECTRICAL SHOCK HAZARD** Disconnect all remote electric power supplies before servicing.	**WARNING** **ELECTRICAL SHOCK HAZARD** Disconnect all remote electric power supplies before servicing.
WARNING Moving parts. Do not operate unit with grille removed. Stop the unit before the servicing.	**WARNING** Moving parts. Do not operate unit with grille removed. Stop the unit before the servicing.
CAUTION High temperature parts. You might get burned when removing this panel.	**CAUTION** High temperature parts. You might get burned when removing this panel.
CAUTION Do not touch the aluminum fins of the unit and ionizer PIN of Air purifier. Doing so may result in injury.	**CAUTION** Do not touch the aluminium fins of the unit and ionizer PIN of Air purifier. Doing so may result in injury.
CAUTION **BURST HAZARD** Open the service valves before the operation, otherwise there might be the burst.	**CAUTION** **BURST HAZARD** Open the service valves before the operation, otherwise there might be the burst.

PRECAUTIONS FOR SAFETY

The manufacturer shall not assume any liability for the damage caused by not observing the description of this manual.

⚠ DANGER

Turn off breaker	Before carrying out the installation, maintenance, repair or removal work, be sure to set the circuit breaker for both the indoor and outdoor units to the OFF position. Otherwise, electric shocks may result.
	Before opening the intake grille of the indoor unit or service panel of the outdoor unit, set the circuit breaker to the OFF position. Failure to set the circuit breaker to the OFF position may result in electric shocks through contact with the interior parts. Only a qualified installer (*1) or qualified service person (*1) is allowed to remove the intake grille of the indoor unit or service panel of the outdoor unit and do the work required.
	Before opening the electric box cover set the circuit breaker to the OFF position. Failure to set the circuit breaker to the OFF position may result in injury through contact with the rotation parts. Only a qualified installer (*1) or qualified service person (*1) is allowed to remove the electric box cover and do the work required.
	Before starting to repair the outdoor unit fan or fan guard, be absolutely sure to set the circuit breaker to the OFF position, and place a “Work in progress” sign on the circuit breaker.
	When cleaning the filter or other parts of the indoor unit, set the circuit breaker to OFF without fail, and place a “Work in progress” sign near the circuit breaker before proceeding with the work.
	When you have noticed that some kind of trouble (such as when a check code display has appeared, there is a smell of burning, abnormal sounds are heard, the air conditioner fails to cool or heat or water is leaking) has occurred in the air conditioner, do not touch the air conditioner yourself but set the circuit breaker to the OFF position, and contact a qualified service person. Take steps to ensure that the power will not be turned on (by marking “out of service” near the circuit breaker, for instance) until qualified service person arrives. Continuing to use the air conditioner in the trouble status may cause mechanical problems to escalate or result in electric shocks or other failure.
Electric shock hazard	When you access inside of the electric cover to repair electric parts, wait for about five minutes after turning off the breaker. Do not start repairing immediately.Otherwise you may get electric shock by touching terminals of high-voltage capacitors. Natural discharge of the capacitor takes about five minutes.
	When checking the electric parts, removing the cover of the electric parts box of Indoor Unit and/or service panel of Outdoor Unit inevitably to determine the failure, use gloves to provide protection for electricians, insulating shoes, clothing to provide protection from electric shock and insulating tools. Be careful not to touch the live part. Electric shock may result. Only “Qualified service person” is allowed to do this work.
Prohibition	Place a “Work in progress” sign near the circuit breaker while the installation, maintenance, repair or removal work is being carried out. There is a danger of electric shocks if the circuit breaker is set to ON by mistake.
	When checking the electric parts, removing the cover of the electric parts box of Indoor Unit and/or front panel of outdoor unit inevitably to determine the failure, put a sign “Do not enter” around the site before the work. Failure to do this may result in third person getting electric shock.
	Before operating the air conditioner after having completed the work, check that the electrical parts box cover of the indoor unit and service panel of the outdoor unit are closed, and set the circuit breaker to the ON position. You may receive an electric shock if the power is turned on without first conducting these checks.
Stay on protection	If, in the course of carrying out repairs, it becomes absolutely necessary to check out the electrical parts with the electrical parts box cover of one or more of the indoor units and the service panel of the outdoor unit removed in order to find out exactly where the trouble lies, wear insulated heat-resistant gloves, insulated boots and insulated work overalls, and take care to avoid touching any live parts. You may receive an electric shock if you fail to heed this warning. Only qualified service person (*1) is allowed to do this kind of work.

(*1) Refer to the “Definition of Qualified Installer or Qualified Service Person”

⚠WARNIG

General	Before starting to repair the air conditioner, read carefully through the Service Manual, and repair the air conditioner by following its instructions.
	Only qualified service person (*1) is allowed to repair the air conditioner. Repair of the air conditioner by unqualified person may give rise to a fire, electric shocks, injury, water leaks and / or other problems.
	Do not use any refrigerant different from the one specified for complement or replacement. Otherwise, abnormally high pressure may be generated in the refrigeration cycle, which may result in a failure or explosion of the product or an injury to your body.
	Only a qualified installer (*1) or qualified service person (*1) is allowed to carry out the electrical work of the air conditioner. Under no circumstances must this work be done by an unqualified individual since failure to carry out the work properly may result in electric shocks and / or electrical leaks.
	When the air conditioner is to be transported, installed, maintained, repaired or removed, wear protective gloves and 'safety' work clothing.
	To connect the electrical wires, repair the electrical parts or undertake other electrical jobs, wear gloves to provide protection for electricians, insulating shoes and clothing to provide protection from electric shocks. Failure to wear this protective gear may result in electric shocks.
	Electrical wiring work shall be conducted according to law and regulation in the community and Installation Manual. Failure to do so may result in electrocution or short circuit.
	Use wiring that meets the specifications in the Installation Manual and the stipulations in the local regulations and laws. Use of wiring which does not meet the specifications may give rise to electric shocks, electrical leakage, smoking and/or a fire.
	Only a qualified installer (*1) or qualified service person (*1) is allowed to undertake work at heights using a stand of 50 cm or more or to remove the intake grille of the indoor unit to undertake work.
	When working at heights, use a ladder which complies with the ISO 14122 standard, and follow the procedure in the ladder's instructions. Also wear a helmet for use in industry as protective gear to undertake the work.
	Before working at heights, put a sign in place so that no-one will approach the work location, before proceeding with the work. Parts and other objects may fall from above, possibly injuring a person below. While carrying out the work, wear a helmet for protection from falling objects.
	When executing address setting, test run, or troubleshooting through the checking window on the electric parts box, put on insulated gloves to provide protection from electric shock. Otherwise you may receive an electric shock.
	Do not touch the aluminum fin of the unit. You may injure yourself if you do so. If the fin must be touched for some reason, first put on protective gloves and safety work clothing, and then proceed.
	Do not climb onto or place objects on top of the outdoor unit. You may fall or the objects may fall off the outdoor unit and result in injury.
	Use forklift truck to carry in the air conditioner units and use winch or hoist at installation of them.
	When transporting the air conditioner, wear shoes with protective toe caps, protective gloves and other protective clothing.
	When transporting the air conditioner, do not hold the bands around the packing carton. You may injure yourself if the bands should break.
	Be sure that a heavy unit (10 kg or heavier) such as a compressor is carried by four persons.
Check earth wires.	Before troubleshooting or repair work, check the earth wire is connected to the earth terminals of the main unit, otherwise an electric shock is caused when a leak occurs.If the earth wire is not correctly connected, contact an electric engineer for rework.
	After completing the repair or relocation work, check that the ground wires are connected properly.
	Connect earth wire. (Grounding work) Incomplete grounding causes an electric shock. Do not connect earth wires to gas pipes, water pipes, and lightning rods or ground wires for telephone wires.

(*1) Refer to the "Definition of Qualified Installer or Qualified Service Person"

Prohibition of modification.	Do not modify the products.Do not also disassemble or modify the parts. It may cause a fire, electric shock or injury.
Use specified parts.	When any of the electrical parts are to be replaced, ensure that the replacement parts satisfy the specifications given in the Service Manual (or use the parts contained on the parts list in the Service Manual). Use of any parts which do not satisfy the required specifications may give rise to electric shocks, smoking and / or a fire.
Do not bring a child close to the equipment.	If, in the course of carrying out repairs, it becomes absolutely necessary to check out the electrical parts with the electrical parts box cover of one or more of the indoor units and the service panel of the outdoor unit removed in order to find out exactly where the trouble lies, put a sign in place so that no-one will approach the work location before proceeding with the work. Third-party individuals may enter the work site and receive electric shocks if this warning is not heeded.
Insulating measures	Connect the cut-off lead wires with crimp contact, etc., put the closed end side upward and then apply a watercut method, otherwise a leak or production of fire is caused at the users' side.
No fire	When performing repairs using a gas burner, replace the refrigerant with nitrogen gas because the oil that coats the pipes may otherwise burn. When repairing the refrigerating cycle, take the following measures. 1) Be attentive to fire around the cycle. When using a gas stove, etc., be sure to put out fire before work; otherwise the oil mixed with refrigerant gas may catch fire. 2) Do not use a welder in the closed room. When using it without ventilation, carbon monoxide poisoning may be caused. 3) Do not bring inflammables close to the refrigerant cycle, otherwise fire of the welder may catch the inflammables.
Refrigerant	The refrigerant used by this air conditioner is the R32 or R410A.
	Check the used refrigerant name and use tools and materials of the parts which match with it. For the products which use R32 or R410A refrigerant, the refrigerant name is indicated at a position on the outdoor unit where is easy to see. To prevent miss charging, the route of the service port is changed from one of the former R22.
	Do not use any refrigerant different from the one specified for complement or replacement. Otherwise, abnormally high pressure may be generated in the refrigeration cycle, which may result in a failure or explosion of the product or an injury to your body.
	For an air conditioner which uses R32 or R410A, never use other refrigerant than R32 or R410A. For an air conditioner which uses other refrigerant (R22, etc.), never use R32 or R410A. If different types of refrigerant are mixed, abnormal high pressure generates in the refrigerating cycle and an injury due to breakage may be caused.
	When the air conditioner has been installed or relocated, follow the instructions in the Installation Manual and purge the air completely so that no gases other than the refrigerant will be mixed in the refrigerating cycle. Failure to purge the air completely may cause the air conditioner to malfunction.
	Do not charge refrigerant additionally. If charging refrigerant additionally when refrigerant gas leaks, the refrigerant composition in the refrigerating cycle changes resulted in change of air conditioner characteristics or refrigerant over the specified standard amount is charged and an abnormal high pressure is applied to the inside of the refrigerating cycle resulted in cause of breakage or injury. Therefore if the refrigerant gas leaks, recover the refrigerant in the air conditioner, execute vacuuming, and then newly recharge the specified amount of liquid refrigerant. In this time, never charge the refrigerant over the specified amount.
	When recharging the refrigerant in the refrigerating cycle, do not mix the refrigerant or air other than R32 or R410A into the specified refrigerant. If air or others is mixed with the refrigerant, abnormal high pressure generates in the refrigerating cycle resulted in cause of injury due to breakage.
	After installation work, check the refrigerant gas does not leak. If the refrigerant gas leaks in the room, poisonous gas generates when gas touches to fire such as fan heater, stove or cooking stove though the refrigerant gas itself is innocuous.
	Never recover the refrigerant into the outdoor unit. When the equipment is moved or repaired, be sure to recover the refrigerant with recovering device. The refrigerant cannot be recovered in the outdoor unit; otherwise a serious accident such as breakage or injury is caused.

Assembly / Wiring	After repair work, surely assemble the disassembled parts, and connect and lead the removed wires as before. Perform the work so that the cabinet or panel does not catch the inner wires. If incorrect assembly or incorrect wire connection was done, a disaster such as a leak or fire is caused at user's side.
Insulator check	After the work has finished, be sure to use an insulation tester set (500VMΩ) to check the resistance is 1 MΩ or more between the charge section and the non-charge metal section (Earth position). If the resistance value is low, a disaster such as a leak or electric shock is caused at user's side.
Ventilation	When the refrigerant gas leaks during work, execute ventilation. If the refrigerant gas touches to a fire, poisonous gas generates. A case of leakage of the refrigerant and the closed room full with gas is dangerous because a shortage of oxygen occurs. Be sure to execute ventilation.
	If refrigerant gas has leaked during the installation work, ventilate the room immediately. If the leaked refrigerant gas comes in contact with fire, noxious gas may generate.
	After installation work, check the refrigerant gas does not leak. If the refrigerant gas leaks in the room, poisonous gas generates when gas touches to fire such as fan heater, stove or cooking stove though the refrigerant gas itself is innocuous.
Compulsion	When the refrigerant gas leaks, find out the leaked position and repair it surely. If the leaked position cannot be found out and the repair work is interrupted, reclaim and tighten the service valve, otherwise the refrigerant gas may leak into the room. The poisonous gas generates when gas touches to fire such as fan heater, stove or cooking stove though the refrigerant gas itself is innocuous. When installing equipment which includes a large amount of charged refrigerant in a sub-room, it is necessary that the concentration does not the limit even if the refrigerant leaks. If the refrigerant leaks and exceeds the limit concentration, an accident of shortage of oxygen is caused.
	Tighten the flare nut with a torque wrench in the specified manner. Excessive tighten of the flare nut may cause a crack in the flare nut after a long period, which may result in refrigerant leakage.
	Nitrogen gas must be used for the airtight test.
	The charge hose must be connected in such a way that it is not slack.
	For the installation / moving / reinstallation work, follow to the Installation Manual. If an incorrect installation is done, a trouble of the refrigerating cycle, water leak, electric shock or fire is caused.
Check after repair	Once repair work has been completed, check for refrigerant leaks, and check the insulation resistance and water drainage. Then perform a trial run to check that the air conditioner is running properly.
	After repair work has finished, check there is no trouble. If check is not executed, a fire, electric shock or injury may be caused. For a check, turn off the power breaker.
	After repair work (installation of front panel and cabinet) has finished, execute a test run to check there is no generation of smoke or abnormal sound. If check is not executed, a fire or an electric shock is caused. Before test run, install the front panel and cabinet.
	Be sure to fix the screws back which have been removed for installation or other purposes.
Do not operate the unit with the valve closed.	Check the following matters before a test run after repairing piping. • Connect the pipes surely and there is no leak of refrigerant. • The valve is opened. Running the compressor under condition that the valve closes causes an abnormal high pressure resulted in damage of the parts of the compressor and etc. and moreover if there is leak of refrigerant at connecting section of pipes, the air is sucked and causes further abnormal high pressure resulted in burst or injury.
Check after reinstallation	Only a qualified installer (*1) or qualified service person (*1) is allowed to relocate the air conditioner. It is dangerous for the air conditioner to be relocated by an unqualified individual since a fire, electric shocks, injury, water leakage, noise and / or vibration may result.
	Check the following items after reinstallation. 1) The earth wire is correctly connected. 2) The power cord is not caught in the product. 3) There is no inclination or unsteadiness and the installation is stable. If check is not executed, a fire, an electric shock or an injury is caused.
	When carrying out the reclaim work shut down the compressor before disconnecting the refrigerant pipe. Disconnecting the refrigerant pipe with the service valve left open and the compressor still operating will cause air, etc. to be sucked in, raising the pressure inside the refrigeration cycle to an abnormally high level, and possibly resulting in rupture, injury, etc.

(*1) Refer to the "Definition of Qualified Installer or Qualified Service Person"

Cooling check	When the service panel of the outdoor unit is to be opened in order for the compressor or the area around this part to be repaired immediately after the air conditioner has been shut down, set the circuit breaker to the OFF position, and then wait at least 10 minutes before opening the service panel. If you fail to heed this warning, you will run the risk of burning yourself because the compressor pipes and other parts will be very hot to the touch. In addition, before proceeding with the repair work, wear the kind of insulated heat-resistant gloves designed to protect electricians.
	Take care not to get burned by compressor pipes or other parts when checking the cooling cycle while running the unit as they get heated while running. Be sure to put on gloves providing protection for heat.
	When the service panel of the outdoor unit is to be opened in order for the fan motor, reactor, inverter or the areas around these parts to be repaired immediately after the air conditioner has been shut down, set the circuit breaker to the OFF position, and then wait at least 10 minutes before opening the service panel. If you fail to heed this warning, you will run the risk of burning yourself because the fan motor, reactor, inverter heat sink and other parts will be very hot to the touch. In addition, before proceeding with the repair work, wear the kind of insulated heat-resistant gloves designed to protect electricians.
Installation	Only a qualified installer or service person is allowed to do installation work. Inappropriate installation may result in water leakage, electric shock or fire.
	Before starting to install the air conditioner, read carefully through the Installation Manual, and follow its instructions to install the air conditioner.
	Be sure to use the company-specified products for the separately purchased parts. Use of non-specified products may result in fire, electric shock, water leakage or other failure. Have the installation performed by a qualified installer.
	Do not supply power from the power terminal block equipped on the outdoor unit to another outdoor unit. Capacity overflow may occur on the terminal block and may result in fire.
	Do not install the air conditioner in a location that may be subject to a risk of expire to a combustible gas. If a combustible gas leaks and becomes concentrated around the unit, a fire may occur.
	Install the indoor unit at least 2.5 m above the floor level since otherwise the users may injure themselves or receive electric shocks if they poke their fingers or other objects into the indoor unit while the air conditioner is running.
	Install a circuit breaker that meets the specifications in the Installation Manual and the stipulations in the local regulations and laws.
	Install the circuit breaker where it can be easily accessed by the agent.
	If you install the unit in a small room, take appropriate measures to prevent the refrigerant from exceeding the limit concentration even if it leaks. Consult the dealer from whom you purchased the air conditioner when you implement the measures. Accumulation of highly concentrated refrigerant may cause an oxygen deficiency accident.
	Do not place any combustion appliance in a place where it is directly exposed to the wind of air conditioner, otherwise it may cause imperfect combustion.

Explanations given to user

If you have discovered that the fan grille is damaged, do not approach the outdoor unit but set the circuit breaker to the OFF position, and contact a qualified service person to have the repairs done.
Do not set the circuit breaker to the ON position until the repairs are completed.

Relocation

- Only a qualified installer (*1) or qualified service person (*1) is allowed to relocate the air conditioner.
  It is dangerous for the air conditioner to be relocated by an unqualified individual since a fire, electric shocks, injury, water leakage, noise and / or vibration may result.
- When carrying out the reclaim work shut down the compressor before disconnecting the refrigerant pipe.
  Disconnecting the refrigerant pipe with the service valve left open and the compressor still operating will cause air, etc. to be sucked in, raising the pressure inside the refrigeration cycle to an abnormally high level, and possibly resulting in rupture, injury, etc.

(*1) Refer to the “Definition of Qualified Installer or Qualified Service Person”

Declaration of Conformity

Manufacturer: TOSHIBA CARRIER (THAILAND) CO., LTD.
144 / 9 Moo 5, Bangkadi Industrial Park, Tivanon Road, Tambol Bangkadi,
Amphur Muang, Pathumthani 12000, Thailand

TCF holder: TOSHIBA CARRIER EUROPE S.A.S
Route de Thil 01120 Montluel FRANCE

Hereby declares that the machinery described below:

Generic Denomination: Air Conditioner

Model / type: MMU-UP0151YHP-E(TR), MMU-UP0181YHP-E(TR),
MMU-UP0241YHP-E(TR), MMU-UP0271YHP-E(TR)

Commercial name: Super Modular Multi System Air Conditioner
Super Heat Recovery Multi System Air Conditioner
Mini-Super Modular Multi System Air Conditioner (MiNi-SMMS series)

Complies with the provisions of the Machinery Directive (Directive 2006/42/EC) and the regulations transposing into national law

Name	:	Masaru Takeyama
Position	:	GM, Quality Assurance Dept.
Date	:	14 March, 2022
Place issued	:	Thailand

NOTE

This declaration becomes invalid if technical or operational modifications are introduced without the manufacturer's consent.

Declaration of Conformity

Manufacturer: TOSHIBA CARRIER (THAILAND) CO., LTD.
144 / 9 Moo 5, Bangkadi Industrial Park, Tivanon Road, Tambol Bangkadi,
Amphur Muang, Pathumthani 12000, Thailand

TCF holder: TOSHIBA CARRIER UK LTD.
Porsham Close Belliver Industrial Estate Roborough Plymouth Devon
PL6 7DB United Kingdom

Hereby declares that the machinery described below:

Generic Denomination: Air Conditioner

Model / type: MMU-UP0151YHP-E(TR), MMU-UP0181YHP-E(TR),
MMU-UP0241YHP-E(TR), MMU-UP0271YHP-E(TR)

Commercial name: Super Modular Multi System Air Conditioner
Super Heat Recovery Multi System Air Conditioner
Mini-Super Modular Multi System Air Conditioner (MiNi-SMMS series)

Complies with the provisions of the Supply of Machinery (Safety) Regulations 2008

Name	:	Masaru Takeyama
Position	:	GM, Quality Assurance Dept.
Date	:	14 March, 2022
Place issued	:	Thailand

NOTE

This declaration becomes invalid if technical or operational modifications are introduced without the manufacturer's consent.

Specifications

Model	Sound power level (dBA)		Weight (kg) Main unit (Ceiling panel)
	Cooling	Heating	
MMU-UP0151YHP-E(TR)	*	*	15 (5)
MMU-UP0181YHP-E(TR)	*	*	15 (5)
MMU-UP0241YHP-E(TR)	*	*	16 (5)
MMU-UP0271YHP-E(TR)	*	*	16 (5)

* Under 70 dBA

1. SPECIFICATIONS

1-way cassette type

Model name				MMU-UP0151YHP-E MMU-UP0151YHP-TR	MMU-UP0181YHP-E MMU-UP0181YHP-TR	MMU-UP0241YHP-E MMU-UP0241YHP-TR	MMU-UP0271YHP-E MMU-UP0271YHP-TR
Cooling Capacity			(kW)	4.50	5.60	7.10	8.00
Heating Capacity			(kW)	5.00	6.30	8.00	9.00
Electrical characteristics	Power supply			1Ph. 230V(220V-240V) ~ 50Hz. & 1Ph. 220V(208V-230V) ~ 60Hz.			
	Running current		(A)	0.25	0.26	0.34	0.41
	Power consumption		(kW)	0.025	0.027	0.042	0.050
Appearance	Main unit			Zinc hot dipping steel plate			
	Ceiling panel	Model name		RBC-UY42P-E			
		Panel Color		White			
Outer diamension	Main unit	Height	(mm)	150			
		Width	(mm)	1180			
		Depth	(mm)	450			
	Ceiling panel	Height	(mm)	30			
		Width	(mm)	1410			
		Depth	(mm)	530			
Total weight	Main unit		(kg)	15		16	
	Ceiling panel		(kg)	1			
Heat exchanger				Finned tube			
Fan unit	Fan			Cross flow fan			
	Standard air flow	H/M/L	(m^3/hr)	750/630/500	800/650/500	940/760/600	1000/860/720
	Motor		(W)	42		59	
Air filter				Standard filter attached (Long life filter)			
Controller				-	-	-	-
Sound pressure level	H/M/L		(dBA)	39/36/34	40/37/33	46/42/37	47/44/42
Sound power level	H/M/L		(dBA)	54/51/49	55/52/48	61/57/52	62/59/57
Connecting pipe	Gas side		(mm)	12.70	12.70	15.90	15.90
	Liquid		(mm)	6.35	6.35	9.52	9.52

• New Refrigerant (R32 or R410A)

This air conditioner adopts a new HFC type refrigerant (R32 or R410A) which does not deplete the ozone layer.

1. Safety Caution Concerned to New Refrigerant

The pressure of R32 or R410A is high 1.6 times of that of the former refrigerant (R22).
Accompanied with change of refrigerant, the refrigerating oil has been also changed.
Therefore, be sure that water, dust, the former refrigerant or the former refrigerating oil is not mixed into the refrigerating cycle of the air conditioner with new refrigerant during installation work or service work.
If an incorrect work or incorrect service is performed, there is a possibility to cause a serious accident.
Use the tools and materials exclusive to R32 or R410A to purpose a safe work.

2. Cautions on Installation/Service

(1) Do not mix the other refrigerant or refrigerating oil.
For the tools exclusive to R32 or R410A, shapes of all the joints including the service port differ from those of the former refrigerant in order to prevent mixture of them.

(2) As the use pressure of the new refrigerant is high, use material thickness of the pipe and tools which are specified for R32 or R410A.

(3) In the installation time, use clean pipe materials and work with great attention so that water and others do not mix in because pipes are affected by impurities such as water, oxide scales, oil, etc.
Use the clean pipes.
Be sure to brazing with flowing nitrogen gas. (Never use gas other than nitrogen gas.)

(4) For the earth protection, use a vacuum pump for air purge.

(5) R32 or R410A refrigerant is azeotropic mixture type refrigerant.
Therefore use liquid type to charge the refrigerant. (If using gas for charging, composition of the refrigerant changes and then characteristics of the air conditioner change.)

3. Pipe Materials

For the refrigerant pipes, copper pipe and joints are mainly used.
It is necessary to select the most appropriate pipes to conform to the standard.
Use clean material in which impurities adhere inside of pipe or joint to a minimum.

(1) Copper pipe

<Piping>
The pipe thickness, flare finishing size, flare nut and others differ according to a refrigerant type.
When using a long copper pipe for R32 or R410A, it is recommended to select “Copper or copper-base pipe without seam” and one with bonded oil amount 40mg/10m or less.
Also do not use crushed, deformed, discolored (especially inside) pipes. (Impurities cause clogging of expansion valves and capillary tubes.)

<Flare nut>
Use the flare nuts which are attached to the air conditioner unit.

(2) Joint
The flare joint and socket joint are used for joints of the copper pipe.
The joints are rarely used for installation of the air conditioner.
However clear impurities when using them.

4. Tools

(1) Required Tools for R32 or R410A

Mixing of different types of oil may cause a trouble such as generation of sludge, clogging of capillary, etc. Accordingly, the tools to be used are classified into the following three types.

1) Tools exclusive for R32 or R410A (Those which cannot be used for conventional refrigerant (R22))

2) Tools exclusive for R32 or R410A, but can be also used for conventional refrigerant (R22)

3) Tools commonly used for R32 or R410A and for conventional refrigerant (R22)

The table below shows the tools exclusive for R32 or R410A and their interchangeability.

Tools exclusive for R32 or R410A (The following tools for R410A are required.

Tools whose specifications are changed for R32 or R410A and their interchangeability

No.	Used tool	Usage	R32 or R410A airconditioner installation		Conventional air conditioner installation
			Existence of new equipment for R32 or 410A	Whether conventional equipment can be used	Whether new equipment can be used with conventional refrigerant
①	Flare tool	Pipe flaring	Yes	∗(Note 1)	Yes
②	Copper pipe gauge for adjusting projection margin	Flaring by conventional flare tool	Yes	∗(Note 1)	∗(Note 1)
③	Torque wrench	Connection of flare nut	Yes	No	No
④	Gauge manifold	Evacuating, refrigerant charge, run check, etc.	Yes	No	No
⑤	Charge hose				
⑥	Vacuum pump adapter	Vacuum evacuating	Yes	No	Yes
⑦	Electronic balance for refrigerant charging	Refrigerant charge	Yes	Yes	Yes
⑧	Refrigerant cylinder	Refrigerant charge	Yes	No	No
⑨	Leakage detector	Gas leakage check	Yes	No	Yes
⑨	Charging cylinder	Refrigerant charge	(Note 2)	No	No

(Note 1) When flaring is carried out for R32 or R410A using the conventional flare tools, adjustment of projection margin is necessary. For this adjustment, a copper pipe gauge, etc. are necessary.
(Note 2) Charging cylinder for R32 or R410A is being currently developed.

General tools (Conventional tools can be used.)

In addition to the above exclusive tools, the following equipments which serve also for R22 are necessary as the general tools.

1) Vacuum pump
   Use vacuum pump by attaching vacuum pump adapter.
2) Torque wrench
3) Pipe cutter
4) Reamer
5) Pipe bender
6) Level vial
7) Screwdriver (+, –)
8) Spanner or Monkey wrench
9) Hole core drill
10) Hexagon wrench (Opposite side 4mm)
11) Tape measure
12) Metal saw

Also prepare the following equipments for other installation method and run check.

1) Clamp meter
2) Thermometer
3) Insulation resistance tester
4) Electroscope

2. CONSTRUCTION VIEWS (EXTERNAL VIEWS)

1-way cassette type

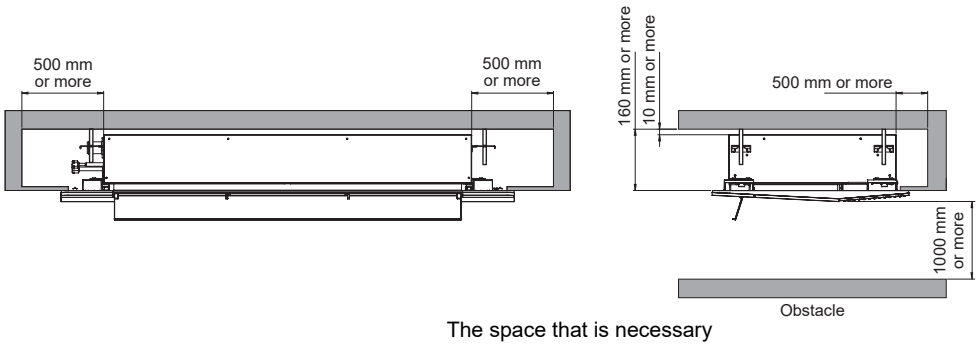

The space that is necessary
for equipping and service

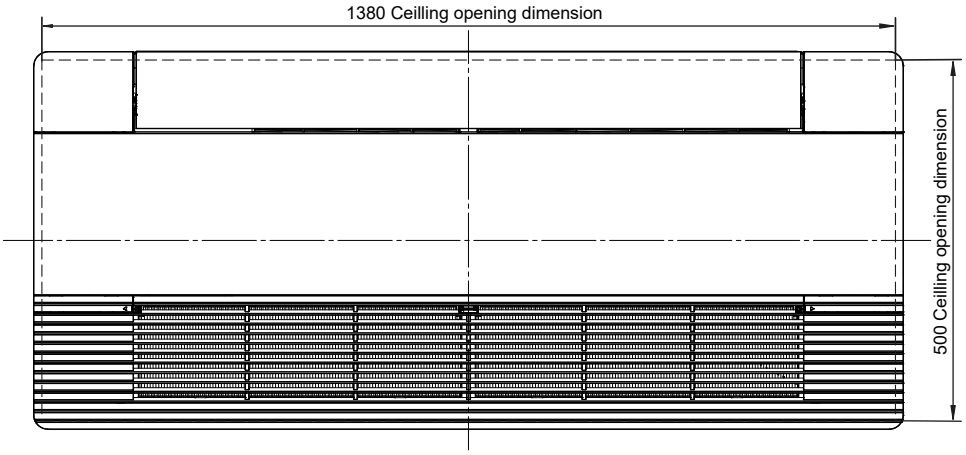

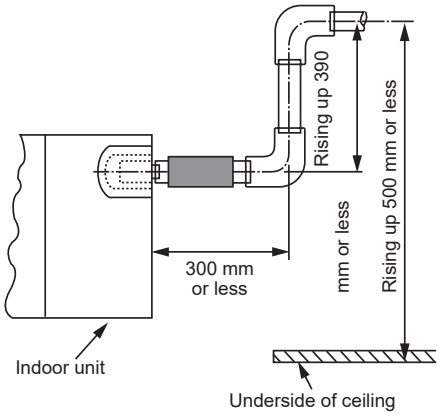

Drain upstanding size

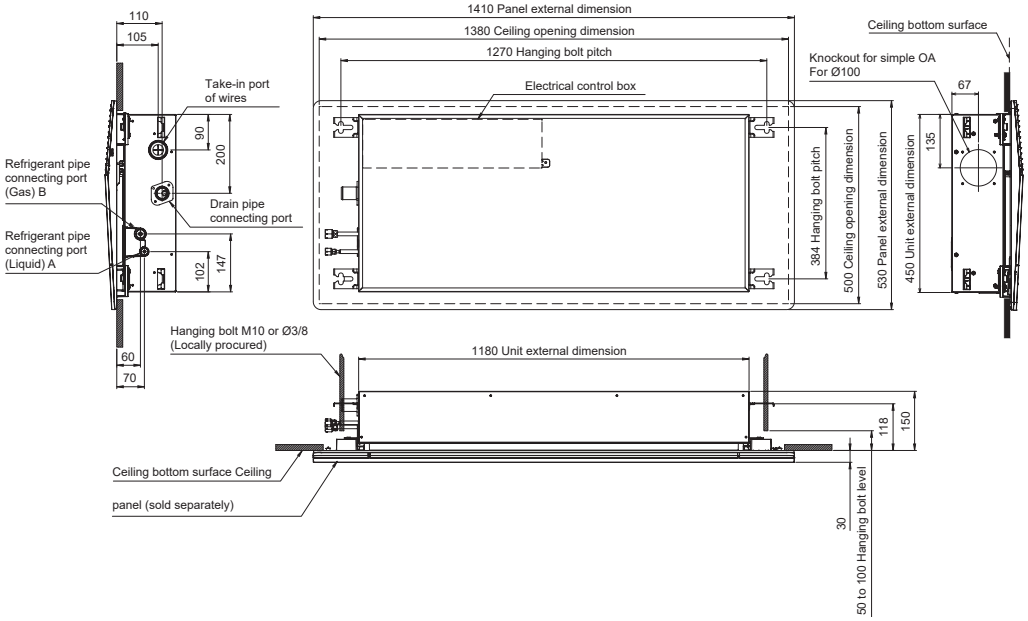

Model MMU-	A	B
UP0151, UP0181	Ø6.35	Ø12.7
UP0241, UP0271	Ø9.52	Ø15.88

3. WIRING DIAGRAM

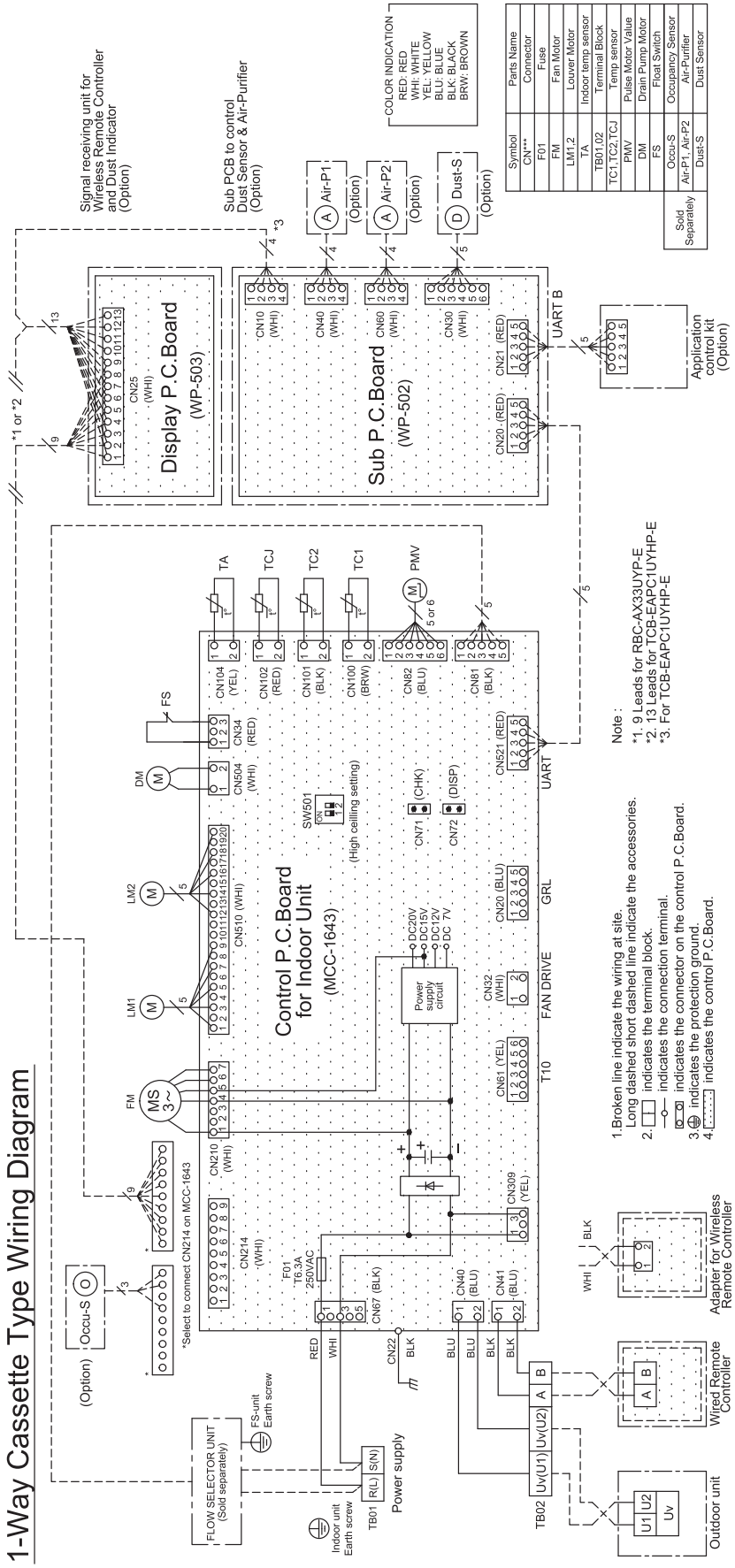

4. PARTS RATING

Model	MMU-			
	UP015	UP018	UP024	UP027
Fan motor	ICF-340-30-6A		ICF-280-61-3	
Motor for horizontal grille	24BYJ48-ST			
Pulse motor valve	PAM-B40YGTF-1			
TA sensor	Lead wire length : 218 Vinyl tube			
TC1 sensor	Ø4 size lead wire length : 1000 mm Vinyl tube (Brown)			
TC2 sensor	Ø6 size lead wire length : 1000 mm Vinyl tube (Black)			
TCJ sensor	Ø6 size lead wire length : 1000 mm Vinyl tube (Red)			
Float switch	FS-0359-601			
Drain pump motor	PMD-08D12TF-2			

5. REFRIGERANT CYCLE DIAGRAM

Indoor unit

(UP015, UP018)

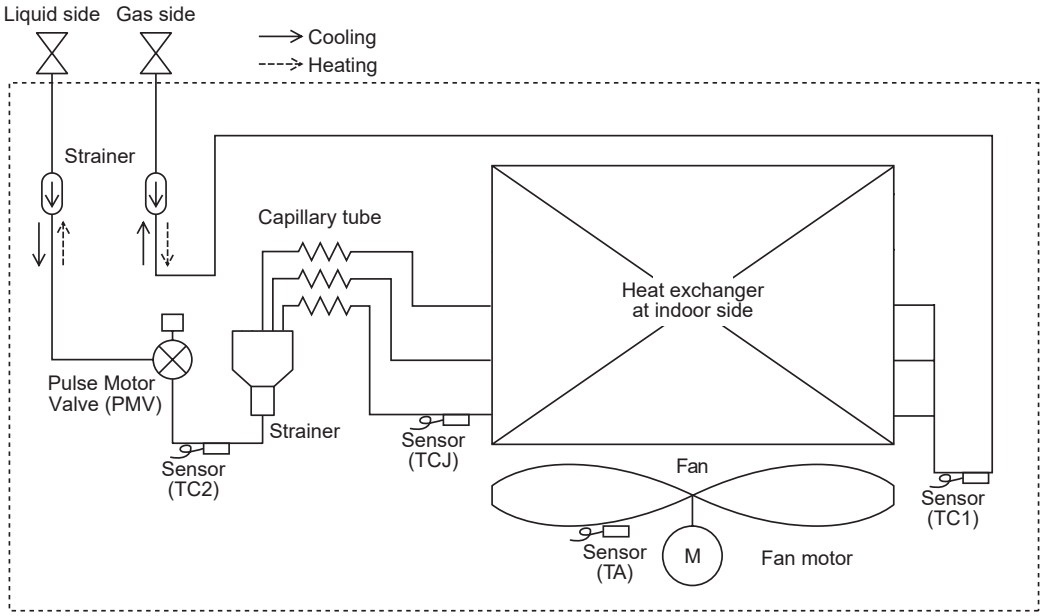

(UP024, UP027)

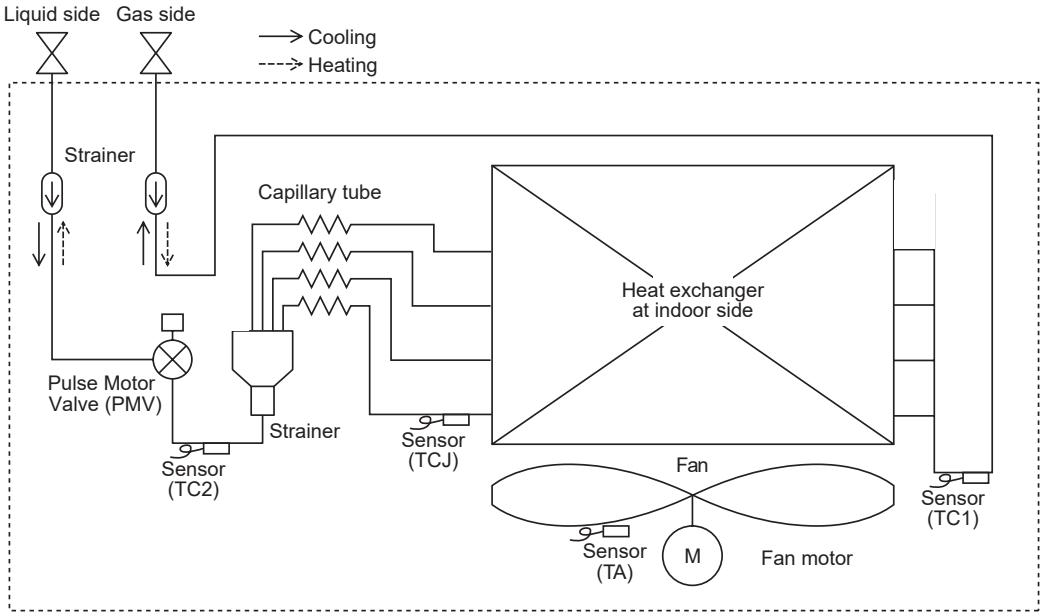

Explanation of functional parts in indoor unit

Functional part name		Functional outline
Pulse Motor Valve	PMV	(Connector CN82 (6P): Blue) 1) Controls superheat in cooling operation 2) Controls subcool in heating operation 3) Recovers refrigerant oil in cooling operation 4) Recovers refrigerant oil in heating operation
Temp. Sensor	TA	(Connector CN104 (2P): Yellow) 1) Detects indoor suction temperature
	TC1	(Connector CN100 (3P): Brown) 1) Controls PMV superheat in cooling operation
	TC2	(Connector CN101 (2P): Black) 1) Controls PMV subcool in heating operation
	TCJ	(Connector CN102 (2P): Red) 1) Controls PMV superheat in cooling operation

6. CONTROL OUTLINE

Control Specifications

<table>
<tr><th>No.</th><th>Item</th><th>Outline of specifications</th><th>Remarks</th></tr>
<tr><td>1</td><td>When power supply is reset</td><td>1) Distinction of outdoor unit
When the power supply is reset, the outdoors are distinguished and the control is selected according to the distinguished result.
2) Setting of indoor fan speed and existence of air direction adjustment
Based on EEPROM data, select setting of the indoor fan speed and the existence of air direction adjustment.
3) If resetting the power supply during occurrence of a trouble, the check code is once cleared. After ON/OFF button of the remote controller was pushed and the operation was resumed, if the abnormal status continues, the check code is again displayed on the remote controller.</td><td></td></tr>
<tr><td>2</td><td>Operation mode selection</td><td>1) Based on the operation mode selecting command from the remote controller, the operation mode is selected.
<table>
<tr><th>Remote controller command</th><th>Control outline</th></tr>
<tr><td>STOP</td><td>Air conditioner stops.</td></tr>
<tr><td>FAN</td><td>Fan operation</td></tr>
<tr><td>COOL</td><td>Cooling operation</td></tr>
<tr><td>DRY</td><td>Dry operation</td></tr>
<tr><td>HEAT</td><td>Heating operation</td></tr>
<tr><td>AUTO
(Heat recovery system outdoor unit type)</td><td>• TA and Ts automatically select COOL/HEAT operation mode for operation.
• The operation is performed as shown in the following figure according to TA value at the first time only.
(In the range of Ts – 1 < TA < Ts + 1, Cooling thermostat OFF (Fan) / Setup air volume operation continues.)</td></tr>
</table>
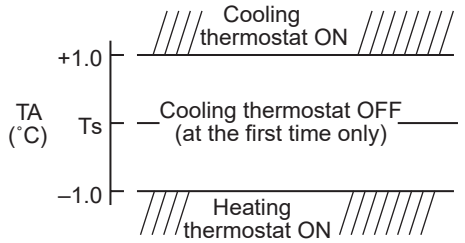

∗ Only Heat recovery system outdoor unit type can select automatic mode. While a wireless remote controller is used, the mode is notified by “Pi Pi” (two times) receiving sound and the alternate flashing of [TIMER] and [READY]. To clear the alternate flashing, change the mode on the wireless remote controller.</td><td>TA: Room temp.
Ts: Setup temp.</td></tr>
<tr><td>3</td><td>Room temp. control</td><td>1) Adjustment range: Remote controller setup temperature (˚C)
<table>
<tr><th></th><th>COOL/DRY</th><th>HEAT</th><th>AUTO∗</th></tr>
<tr><td>Wired type</td><td>18 to 29</td><td>18 to 29</td><td>18 to 29</td></tr>
<tr><td>Wireless type</td><td>17 to 30</td><td>17 to 30</td><td>17 to 30</td></tr>
</table></td><td>∗ For Heat recovery system outdoor unit type</td></tr>
</table>

<table>
<tr><th>No.</th><th>Item</th><th>Outline of specifications</th><th>Remarks</th></tr>
<tr><td>3</td><td>Room temp. control (Continued)</td><td>2) Using the Item code 06, the setup temperature in heating operation can be compensated.
<table>
<tr><th>Setup data</th><th>0</th><th>2</th><th>4</th><th>6</th></tr>
<tr><td>Setup temp. compensation</td><td>+0˚C</td><td>+2˚C</td><td>+4˚C</td><td>+6˚C</td></tr>
</table>
Setting at shipment
<table>
<tr><th>Model</th><th>Set data</th></tr>
<tr><td>Floor standing cabinet, Floor standing concealed, Floor standing</td><td>0</td></tr>
<tr><td>Other models</td><td>2</td></tr>
</table></td><td>Shift of return air temperature in heating operation

Except while sensor of the remote controller is controlled
(Code No. [32], “0001”)</td></tr>
<tr><td>4</td><td>Automatic capacity control</td><td>1) Based on the difference between TA and Ts, the operation capacity is determined by the outdoor unit.
 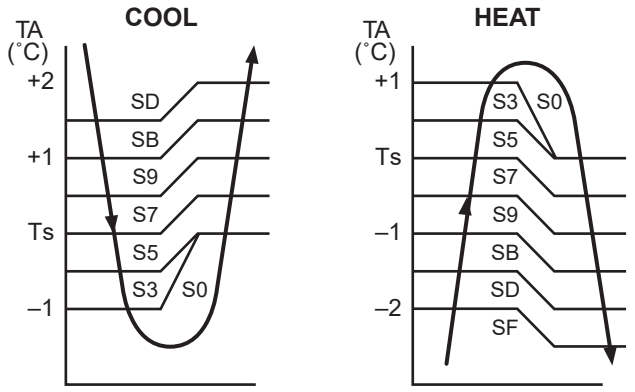
</td><td>Ts: Setup temp.
TA: Room temp.</td></tr>
<tr><td>5</td><td>Automatic cooling/heating control</td><td>1) The judgment of selecting COOL/HEAT is carried out as shown below. When +1.5 exceeds against Tsh 10 minutes and after thermostat OFF, heating operation (Thermostat OFF) exchanges to cooling operation.
Description in the parentheses shows an example of cooling ON/OFF.
 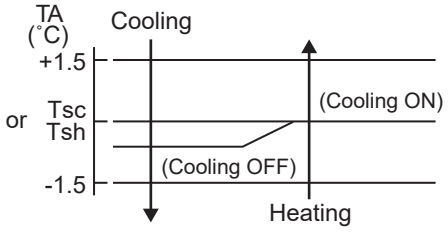

When –1.5 lowers against Tsc 10 minutes and after thermostat OFF, cooling operation (Thermostat OFF) exchanges to heating operation.
2) For the automatic capacity control after judgment of cooling/heating, see Item 4.
3) For temperature compensation of room temp. control in automatic heating, see Item 3.</td><td>∗ For Heat recovery system outdoor unit type
Tsc: Setup temp. in cooling operation
Tsh: Setup temp. in heating operation + temp. compensation of room temp. control</td></tr>
</table>

No.	Item	Outline of specifications	Remarks
6	Fan speed selection	1) By the command from remote control, fan speed is changed. ((HH), (H+), (H), (L+), (L) or [AUTO]) 2) When the fan speed mode [AUTO] is selected, the fan speed varies by the difference between TA and Ts. **<COOL>** 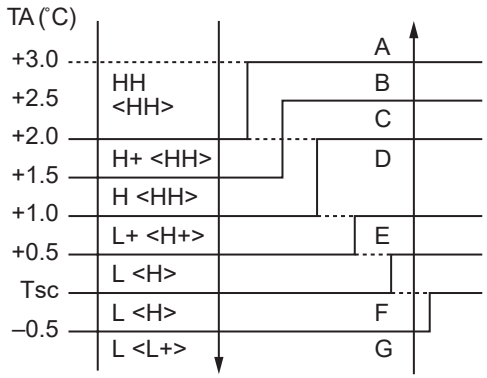 < > : Indicate automatic cooling.	HH > H+ > H > L+ > L > UL Depending on the remote controller used, (H+) and (L+) cannot be selected. For Floor Standing Concealed Type,or Floor Standing Cabinet Type, (HH), (H), (L) or [AUTO] can be selected regardless of remote controller models.
		• Fan speed mode [AUTO] in case when remote controller sensor works is equal to that in case when indoor unit sensor works. • If the fan speed has been changed once, it is not changed for 3 minutes. However when the air volume is changed, the fan speed changes. • When cooling operation has started, select a downward slope for the fan speed, that is, the high position. • If the temperature is just on the difference boundary, the fan speed does not change	Code No. [32] 0000: Indoor unit sensor (Main unit) 0001: Remote controller sensor
		<HEAT> 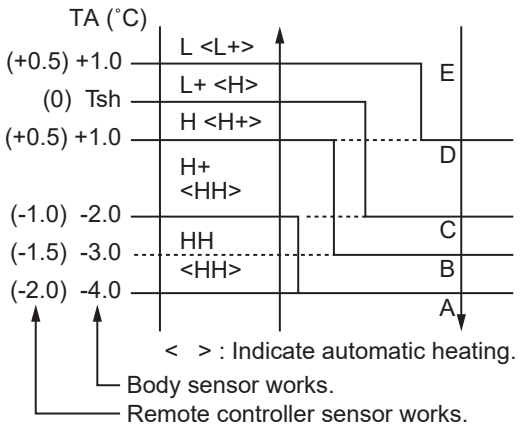 < > : Indicate automatic heating. Value in the parentheses indicates one when sensor of the remote controller works. Value without parentheses indicates one when sensor of the indoor unit sensor works. • Once the fan speed changes, it doesn't change for 3 minutes. However, you can change the fan speed using the remote controller. • When heating operation has started, select an upward slope for the fan speed, that is, the high position. • If the temperature is just on the difference boundary, the fan speed does not change. • In TC2 ≥ 60˚C, the fan speed increases by 1 step.	TC2: Temperature of indoor heat exchanger sensor

No.	Item	Outline of specifications	Remarks
6	Fan speed selection (Continued) :		Selection of high ceiling type CODE No. : [5d] or selection of high ceiling on P.C. board SW501

CODE No. [5d]	Standard		Type 1	
	0000		0001	
SW501 (1)/(2)	OFF/OFF		ON/OFF	
Tap	COOL	HEAT	COOL	HEAT
F1				
F2			HH	HH
F3				H+
F4			H+	
F5		HH		H
F6	HH		H	
F7	H+	H+		
F8		H		L+
F9	H		L+	L
FA		L+	L	
FB	L+	L		
FC	L			
FD		LL		LL

3) In heating operation, the mode changes to [LL] if thermostat is turned off.

No.	Item	Outline of specifications	Remarks
7	Prevention of cold air discharge	1. In heating operation, the higher temperature of TC2 sensor and TCJ sensor is compared with temperature of TC1 sensor and then the lower temperature is used to set the upper limit of the fan tap. • When B zone has continued for 6 minutes, the operation shifts to C zone. • In defrost time, the control point is set to +6˚C. 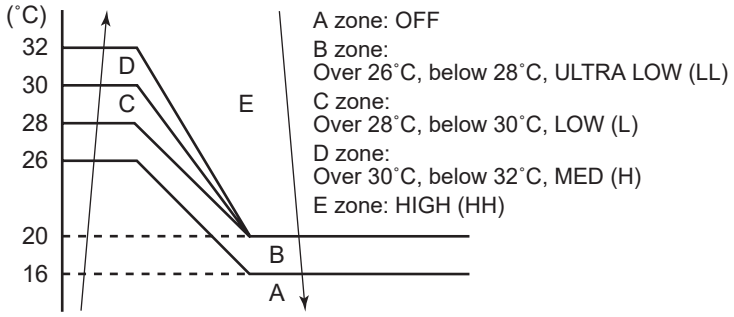 	TCJ: Temperature of indoor heat exchanger sensor • In D and E zones, priority is given to remote controller fan speed setup. • In A zone " ❄ " is displayed.
8	Freeze prevention control (Low temp. release)	1. In all cooling operation, the air conditioner operates as described below based upon temp. detected by TC1, TC2 and TCJ sensors. • When "J" zone is detected for 5 minutes, the thermostat is forcedly off. • In "K" zone, the timer count is interrupted, and held. • When "*I*"zone is detected, the timer is cleared and the operation returns to the normal operation. • If "J" zone continues, operation of the indoor fan in LOW mode continues until it reaches the "*I*"zone. It is reset when the following conditions are satisfied. **Reset conditions** 1) TC1 ≥ 12˚C and TC2 ≥ 12˚C and TCJ ≥ 12˚C 2) 20 minutes passed after stop. 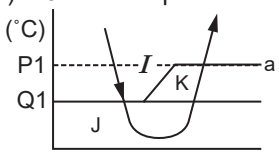 | | TC1 | TC2, TCJ | | P1 | 10˚C (5˚C) | –10˚C | | Q1 | 0˚C | –14˚C | 2. In all cooling operation, the air conditioner operates as described below based upon temp. detected by TC2 and TCJ sensors. • When "M" zone is detected for 45 minutes, the thermostat is forcedly off. • In "N" zone, the timer count is interrupted and held. • When shifting to "M" zone again, the timer count restarts and continues. • If "L"zone is detected, the timer is cleared and the operation returns to normal operation. **Reset conditions** 1) TC1 ≥ 12˚C and TC2 ≥ 12˚C and TCJ ≥ 12˚C 2) 20 minutes passed after stop. 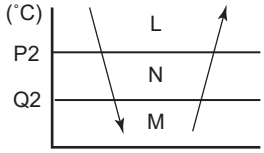 | | TC2, TCJ | | P2 | 5˚C | | Q2 | –2.0˚C |	TC1: Temperature of indoor heat exchanger sensor **( ) value:** When the power supply is turned on, the forced thermostat becomes OFF if the temperature is less than this indicated temperature.

No.	Item	Outline of specifications	Remarks
9	Refrigerant (Oil) recovery control in cooling operation	Indoor units during stop/thermostat OFF or FAN operation perform following controls when a refrigerant (compressor oil) recovery signal is received from outdoor unit at the cooling operation, (1) Opening the indoor unit PMV at constant valve opening. (For a maximum of about 4 minutes) (2) Operating the drain pump for about one minute, during recovery control and after the control finished. Also, indoor unit fan or louvers may operate depending on the indoor unit type.	Control is performed per two hours or when the outdoor unit determines its need.(It varies depending on the indoor units connected.)
10	Refrigerant (Oil) recovery control in heating operation	Indoor units during stop/thermostat OFF or FAN operation perform following controls when a refrigerant (compressor oil) recovery signal is received from outdoor unit at the heating operation, (1) Opening the indoor unit PMV at constant valve opening. (For a maximum of about 20 minutes) (2) TC2 temperature is detected to close its PMV. Also, the fan, louvers, drain pump may operate for about one minute after recovery control finished depending on indoor unit types, until the number of recovery control reaches the predetermined number. NOTE The PMV, indoor fan, or louvers may operate through the outdoor unit instruction. For its detail, refer to the outdoor unit service guide.	Indoor unit during cooling thermostat OFF or FAN operation stops the indoor fan and displays "Operation standby ⏻". Control is performed per one hour or when the outdoor unit determines its need.(It varies depending on the indoor units connected.)
11	Compensation control for short intermittent operation	1) For 3 minutes after start of operation, the operation is forcedly continued even if the unit enters in Thermostat-OFF condition. 2) However the thermostat is OFF giving prior to COOL/HEAT selection, READY ❋ for operation and protective control.	Usually the priority is given to 5 minutes at outdoor controller side.
12	Drain pump control	1) In cooling operation (including DRY operation), this control anytime operates the drain pump. 2) During operation of the drain pump, if the float switch operates, the drain pump continuously operates and a check code is issued. 3) During stop status of the drain pump, if the float switch operates, the thermostat is forcedly off and this control operates the drain pump. After continuous operation of the float switch for approx. 5 minutes, this control stops the operation and a check code is issued.	Check Code [P10] • A model with a drain pump : 4-way, 1-way Concealed Duct High Static Duct Fresh air
13	Elimination of retained heat	1) When the unit stopped from [HEAT] operation, the indoor fan operates with [L] for approx. 30 seconds.	
14	HA control	1) ON/OFF operation is available by input of HA signal from the remote site when connected to remote controller or the remote ON/OFF interface. 2) HA control outputs ON/OFF status to HA terminal. 3) The input-output specifications of HA conform to JEMA standard.	When using HA terminal (CN61) for the remote ON/OFF, a connector sold separately is necessary. In case of group operation, use the connector to connect HA terminal to either master or follower indoor unit.

<table>
<tr><th>No.</th><th>Item</th><th>Outline of specifications</th><th>Remarks</th></tr>
<tr><td>15</td><td>Alarm output setup</td><td>The alarm output from the indoor P.C. board is output in each indoor unit during group control, but it can be set so as to be output in the header unit and follower units.
Following the table below, register the setting data in DN Code "79".
<table>
<tr><th>DN</th><th>Alarm output of the header indoor unit</th><th>Setting data</th></tr>
<tr><td rowspan="2">79</td><td>Not including the state of follower units</td><td>0000 (Factory default)</td></tr>
<tr><td>Including the state of follower units</td><td>0001</td></tr>
</table></td><td>Connector CN61
(Refer to 8-3-1,8-3-2. Optional connector specifications of indoor P.C.board
(MCC-1643

Be sure to change the setting data while operation stops.</td></tr>
<tr><td>16</td><td>Display of filter sign [▦]
(Not provided to the wireless type)</td><td>1) The filter sign is displayed with LC by sending the filter-reset signal to the remote controller when the specified time (150H/2500H) elapsed as a result of integration of the operation time of the indoor fan.
2) The integrated timer is cleared when the filter-reset signal is received from the remote controller.
In this time, if the specified time elapsed, the counted time is reset and the liquid crystal display is deleted.</td><td>[▦ FILTER] goes on.
The filter sign is not displayed in RBC-ASCU11-∗.</td></tr>
<tr><td>17</td><td>Display of [READY]
[HEAT READY]</td><td>< READY> Displayed on the remote controller
1) When the following check codes are indicated
• Open phase of power supply wiring [P05] was detected.
• There is an indoor unit that detected the indoor overflow [P10].
• There is an indoor unit that detected the interlock alarm [L30].
2) During Force Thermostat-OFF
• [COOL/DRY] operation is unavailable because the other indoor unit operates with [HEAT] mode.
• [HEAT] operation is unavailable because COOL priority (SW11-bit1 of the Outdoor I/F P. C. board is ON) is set and the other indoor unit operates with [COOL/DRY] mode.
3) The above indoor units that cannot operate stay in Thermostat-OFF status.
4) The indoor fan stops because the system performs [Recovery operation for heating refrigerant (Oil)].

<HEAT READY> Displayed on the remote controller
The indoor fan stops in order to prevent discharge of cool air when heating operation started or during heating operation. (including the defrost operation during thermostat-OFF)</td><td>• < READY ⏻ > display
No display for wireless type remote controller

• <HEAT READY ❀> display</td></tr>
<tr><td>18</td><td>Selection of central control mode</td><td>1) Selection of the contents that can be operated by the remote controller at the indoor unit side is possible according to setting at the central controller side.
2) Setting contents
<table>
<tr><th rowspan="2">Operation from central controller</th><th colspan="6">Operation on remote controller</th></tr>
<tr><th>ON/OFF setting</th><th>Operation selection</th><th>Timer setting</th><th>Temp. setting</th><th>Fan speed setting</th><th>Air direction setting</th></tr>
<tr><td>Individual</td><td>○</td><td>○</td><td>○</td><td>○</td><td>○</td><td>○</td></tr>
<tr><td>[Central 1]</td><td>×</td><td>○</td><td>×</td><td>○</td><td>○</td><td>○</td></tr>
<tr><td>[Central 2]</td><td>×</td><td>×</td><td>×</td><td>×</td><td>○</td><td>○</td></tr>
<tr><td>[Central 3]</td><td>○</td><td>×</td><td>○</td><td>×</td><td>○</td><td>○</td></tr>
<tr><td>[Central 4]</td><td>○</td><td>×</td><td>○</td><td>○</td><td>○</td><td>○</td></tr>
</table>
(○: Operation possible ×: Operation impossible)</td><td></td></tr>
</table>

No.	Item	Outline of specifications	Remarks
19	Louver control	1) Louver position setup • When the louver position is changed, the position moves necessarily to downward discharge position once to return to the set position. • The louver position can be set up in the following operation range. **In cooling/dry operation** **In heating/fan operation** • In group twin/triple operation, the louver positions can be set up collectively or individually. In case that HEAT refrigerant recovery control was performed in STOP status, the louver position becomes horizontal when the operation is resumed. 2) Swing setup Compact 4-way, 2-way cassette, 1-way cassette (SH) : • [SWING] is displayed and the following display is repeated. **In all operations** 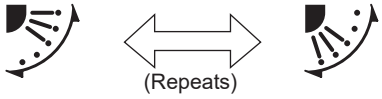 • In group operation, the louver positions can be set up collectively or individually. Floor standing : • [SWING] is displayed and the following display is repeated. **In all operations** • As for Floor standing, the vertical louver operates to a horizontal direction. (Perform vertical wind direction adjustment manually) • In group operation, the louver positions can be set up collectively or individually. 3) When the unit stopped or the warning was output, the louver is automatically set to full closed position. 4) When PRE-HEAT (Heating ready) is displayed (Heating operation started or defrost operation is performed), heating thermostat is off or self-cleaning is performed, the louver is automatically set to horizontal discharge position. * The louver which air direction is individually set or the locked louver closes fully when the unit stops and the louver is automatically set to horizontal discharge position when PRE-HEAT (Heating ready) is displayed, heating thermostat is off.	

<table>
<tr><th>No.</th><th>Item</th><th>Outline of specifications</th><th>Remarks</th></tr>
<tr><td>19</td><td>Louver control
(Continued)</td><td>• If there is the locked louver in the unit, [⊕] goes on the remote controller screen.
• While the following controls are performed, the louvers operate even if executing the louver lock.
<table>
<tr><th></th><th>Control which ignores lock</th><th>Objective louver No.</th></tr>
<tr><td></td><td>Operation stop</td><td>Full-close position</td></tr>
<tr><td></td><td>When heating operation started</td><td>Horizontal discharge position</td></tr>
<tr><td></td><td>Heating thermostat OFF</td><td>Horizontal discharge position</td></tr>
<tr><td></td><td>During defrost operation</td><td>Horizontal discharge position</td></tr>
<tr><td></td><td>Initialize operation</td><td>Full-close position</td></tr>
</table>
• The real louver corresponding to the louver No. displayed on the remote controller screen during setting of louver lock operates swinging.</td><td>For the setting operation, refer to [How to set louver lock] of Installation Manual.

It is position check operation and it does not link with the real louver and air direction setup (Illustration on the remote controller screen).</td></tr>
<tr><td>20</td><td>DC motor</td><td>1) When the fan starts, positioning is performed for the starter and the rotor. (Vibrate slightly)
2) DC motor operates according to the command from the indoor controller.
(Note) If the fan rotates by entry of outside air, etc while the air conditioner stopped, the indoor unit may operate as the fan motor stops.
(Note) If the fan lock was detected, the operation of the indoor unit stops and the check code is displayed.</td><td>Check code [P12]</td></tr>
<tr><td>21</td><td>Power saving mode</td><td>(In the case of RBC-AMT∗∗∗)
1. Push the SAVE button on the remote controller
2. The “ ” segment lights up on the wired remote controller display.
3. The requirement capacity ratio is limited to approximately 75 %.
4. If the power saving operation is enabled, the settings are retained when the operation is stopped, when the mode is changed, or when the power is reset.
The power saving operation will be enabled at the next time the operation starts.
• The operation may differ depending on the connected outdoor unit. Refer to the Service Manual of the outdoor unit.</td><td></td></tr>
</table>

7. COMMUNICATION TYPE, MODEL NAMES AND THE MAXIMUM NUMBER OF CONNECTABLE UNITS

7-1. This air conditioning (U series) has new communication specifications, and TU2C-Link (U series) and TCC-Link (other than U series) differ in a communication type. For the communication type and the model names such as each unit or remote controllers, refer to the following table.

Communication type	TU2C-Link (U series and future models)	TCC-Link (Other than U series)
Outdoor unit	MMY-M**U**P∗∗∗ ↑ This letter indicates U series model.	Other than U series MMY-MAP∗∗∗ MCY-MHP∗∗∗
Indoor unit	MM∗-**U**P∗∗∗ ↑ This letter indicates U series model.	Other than U series MM∗-AP∗∗∗
Wired remote controller	RBC-A∗∗**U**∗∗∗ ↑ This letter indicates U series model.	Other than U series
Wireless remote controller kit & receiver unit	RBC-AX**U**∗∗∗ ↑ This letter indicates U series model.	Other than U series
Remote sensor	TCB-TC∗∗**U**∗∗∗ ↑ This letter indicates U series model.	Other than U series

U series outdoor unit : SMMS-u (MMY-MUP∗∗∗)
Other than U series outdoor unit : SMMS-i, SMMS-e etc. (MMY-MAP∗∗∗)

7-2. If TU2C-Link (U series) is combined with TCC-Link (other than U series), the wiring specifications and the maximum number of connectable indoor units during group control operation will be changed.

(1) For wiring specifications, carry out the installation, maintenance, or repair according to the attached Installation Manual.

(2) For a communication type combination and the max. number of connectable indoor units, refer to the following table.

- Only when all outdoor unit, indoor unit and remote control are a U series, communication method is TU2C-LINK, and the maximum number of connectable units will be 16.

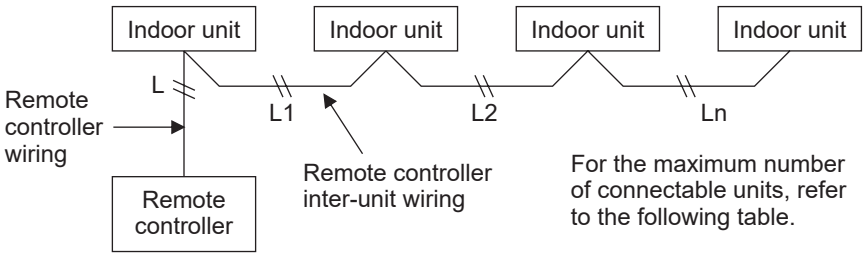

The combination of unit type and the number of the maximum connection of a communication method

	Unit type							
Outdoor unit	U series	U series	U series	U series	*	*	*	*
Indoor unit	U series	U series	*	*	U series	U series	*	*
Remote controller Remote sensor	U series	*	U series	*	U series	*	U series	*
Communication type	TU2C-Link	TCC-Link						
Maximum number of connectable units	16	8						

* Other than U series

8. APPLIED CONTROL AND FUNCTIONS (INCLUDING CIRCUIT CONFIGURATION)

8-1. Indoor controller block diagram (MCC-1643)

8-1-1. In case of connection of wired remote controller

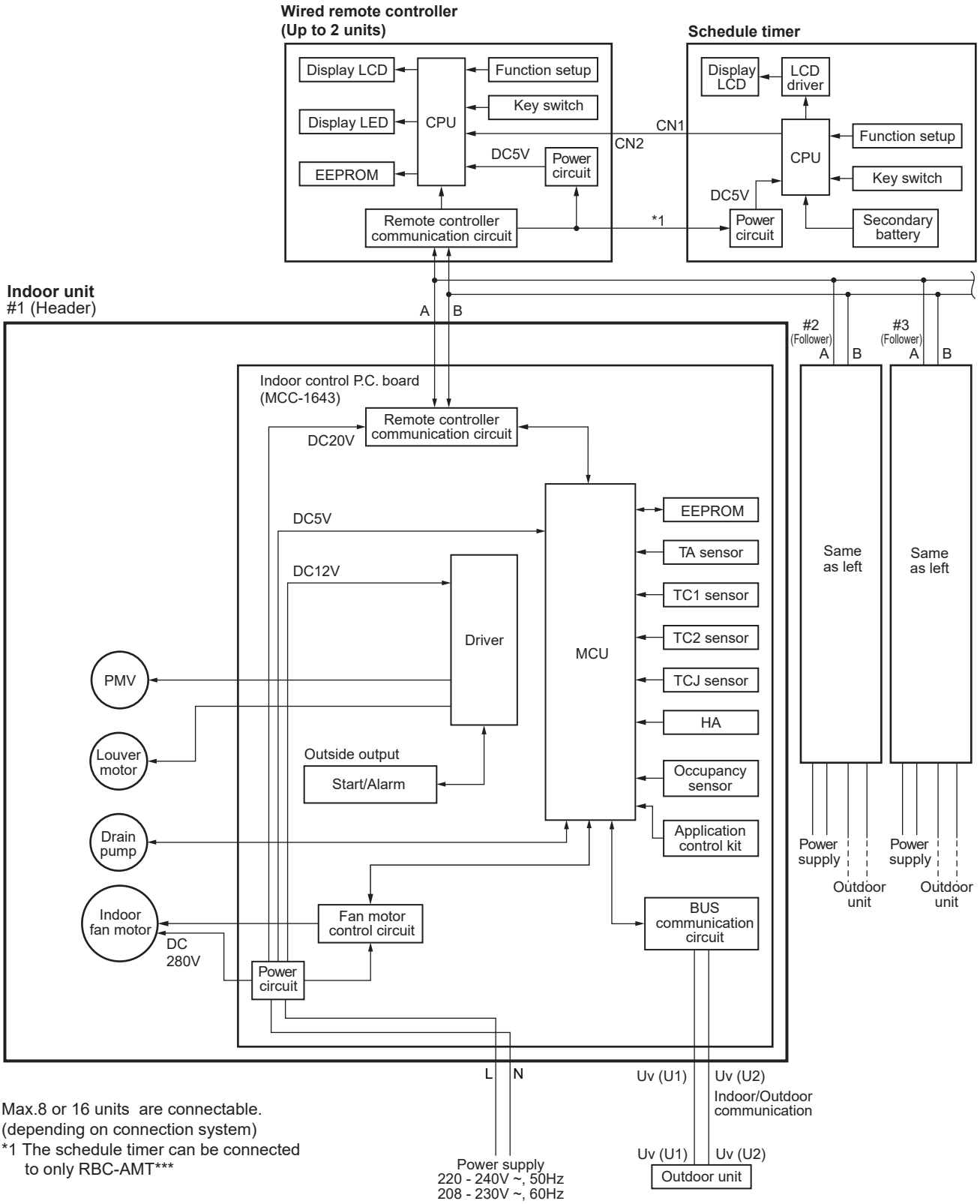

Max.8 or 16 units are connectable.
(depending on connection system)
*1 The schedule timer can be connected to only RBC-AMT***

8-1-2. In case of connection of wireless remote controller

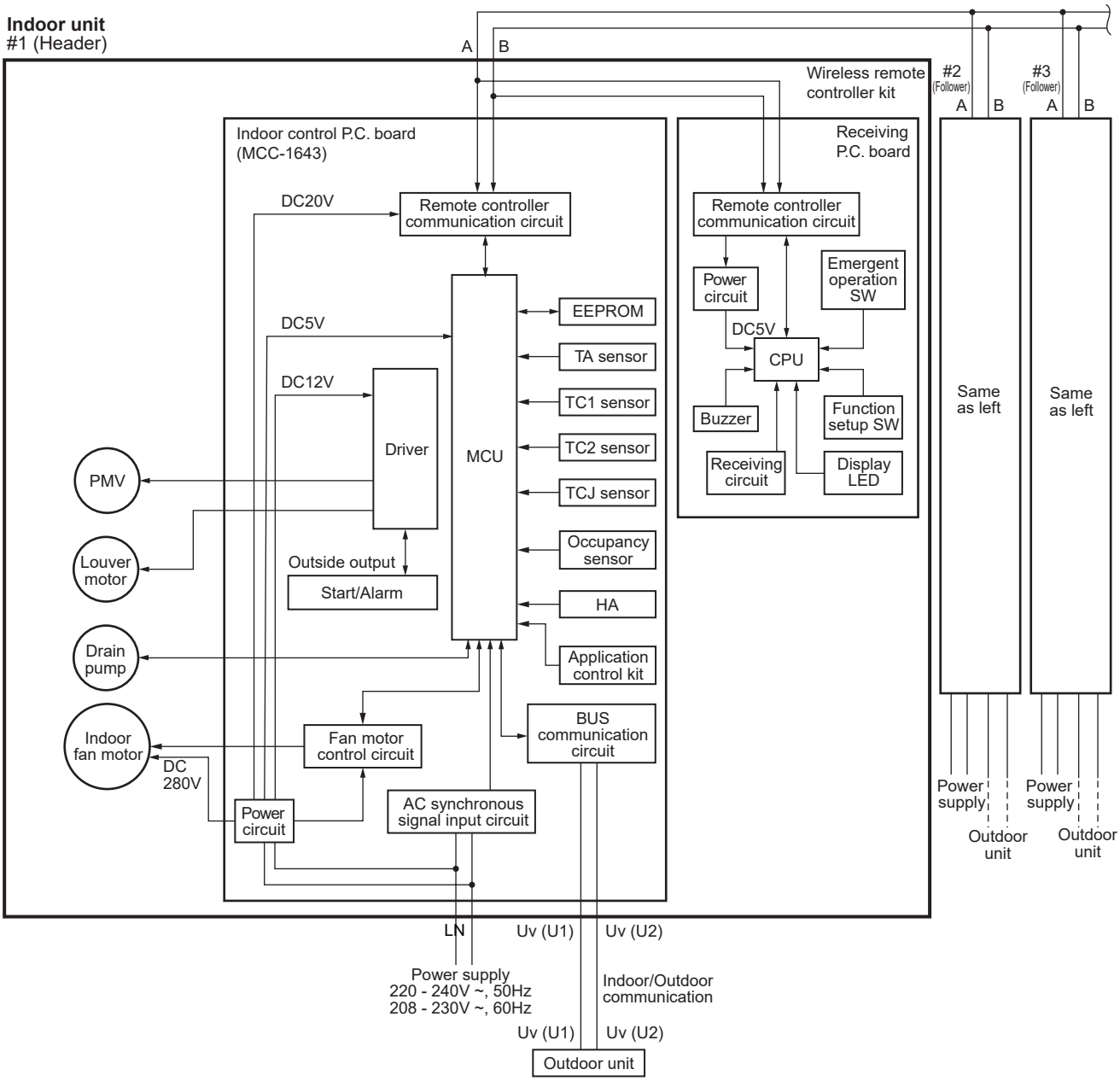

8-1-3. Connection of both wired remote controller and wireless remote controller

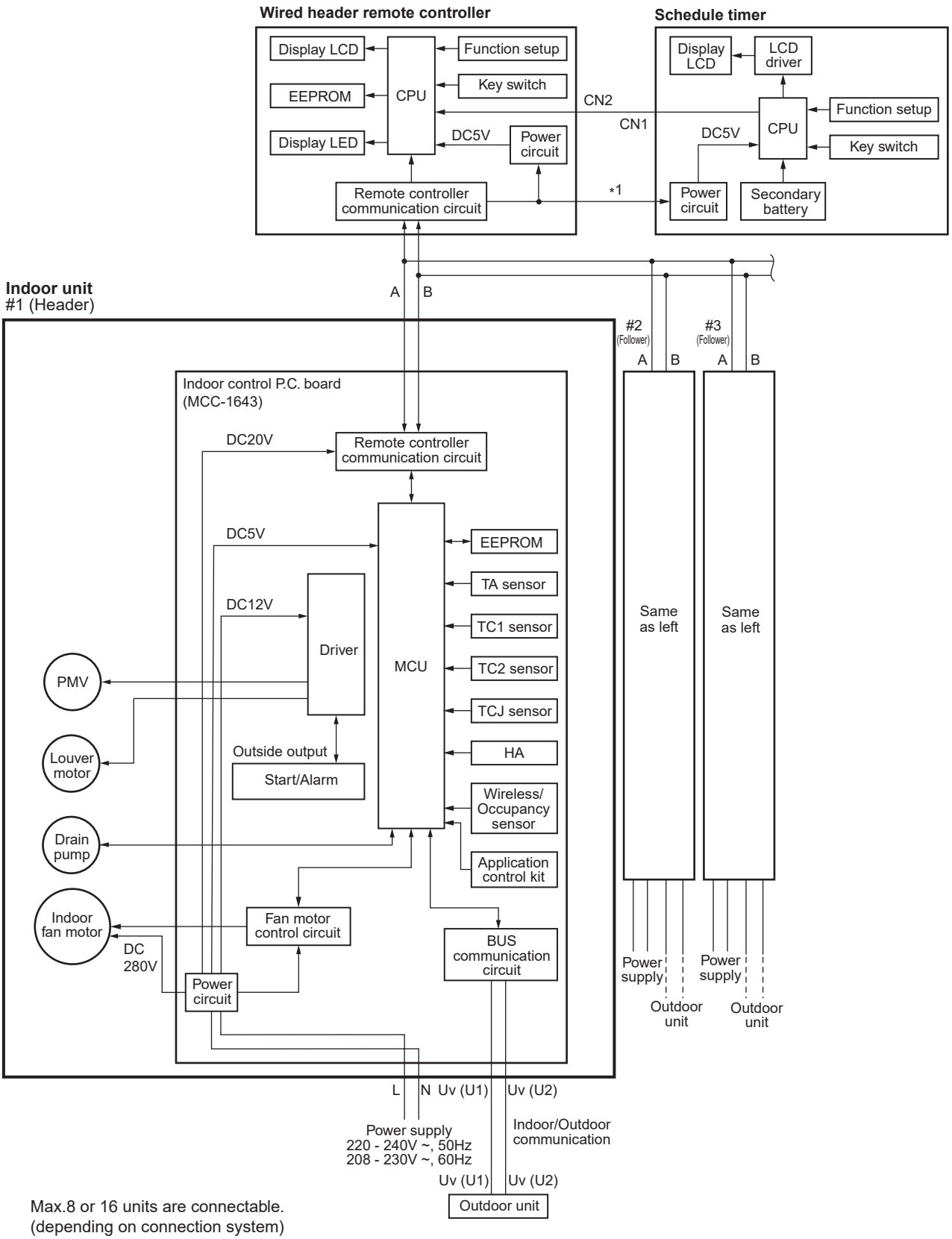

Max.8 or 16 units are connectable.
(depending on connection system)
*1 The schedule timer can be connected to only RBC-AMT∗∗∗.

8-2. Indoor Print Circuit Board

(MCC-1643)

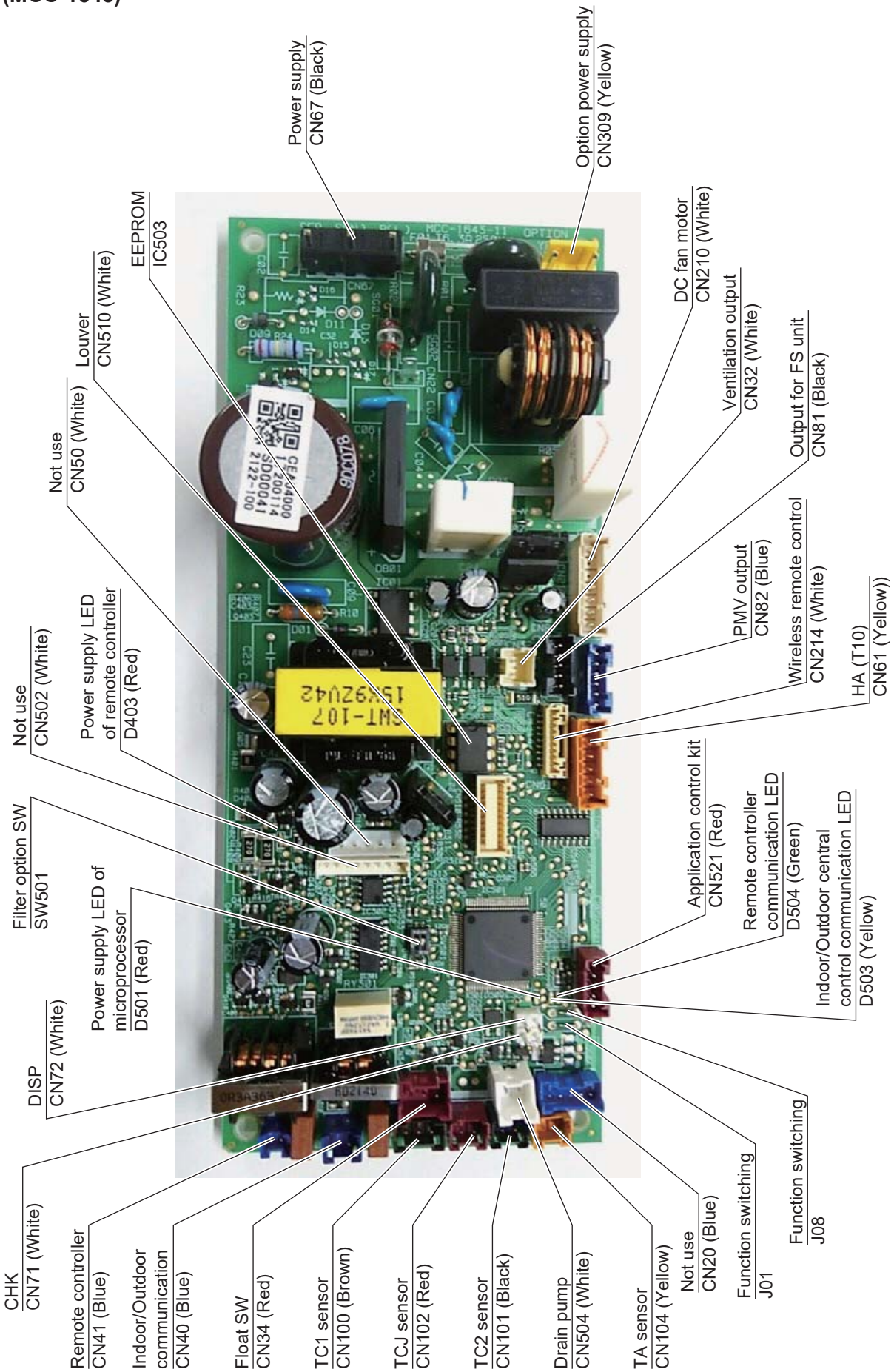

Optional connector specifications of indoor P.C. board (MCC-1643)

Connector No.	Color	Function	Compact 4-way Cassette	2-way Cassette	1-way Cassette (SH)	Floor standing	Pin No.	Specifications	Remarks
CN32	White	Ventilation output	○	○	○	○	① ②	DC12V Output (Open collector)	Setting at shipment: Interlock of ON by indoor unit operation, with OFF by stop operation * The single operation setting by FAN button on the remote controller is performed on the remote controller (DN=31).
CN34	Red	Input for float SW	●			× (With short-circuit connector)	① ② ③	DC12V NC Float SW input	Normal when between ①–③ short-circuits, but abnormal when open-circuits. (check code "P10" appears)
CN61	Yellow	HA	○	○	○	○	① ② ③ ④ ⑤ ⑥	ON/OFF input 0V（COM） Remote controller prohibited input Operation output (Open collector) DC12V（COM） Warning output (Open collector)	HA ON/OFF input (J01: YES/NO=Pulse (At shipment from factory) /Static input selection) Permission/Prohibition of remote controller operation stop is performed by input. Operation ON (Answer back of HA) Warning output ON
CN71	White	CHK Operation check	○	○	○	○	① ②	Check mode input 0V	This check is used to check indoor operation. (Performs operation of indoor fan “H” , Louver horizontal and Drain pump ON without communication with outdoor and remote controller)
CN72	White	DISP Exhibition mode	○	○	○	○	① ②	DISP mode input 0V	Communication is available by indoor unit and remote controller only (When the power is turned on). Shortening time of timer (Always)
CN81	Black	Output for Flow selector unit	△	△	△	△	① ② ③ ④ ⑤	DC12V EP valve output (Open collector) Balance valve output (Open collector) Suction valve output (Open collector) Discharge valve output (Open collector)	
CN309	Yellow	Output power supply for option	○	○	○	○	① ③	AC230V AC230V	This can be used as power supply for option devices.
CN521	Red	Connection for option P.C.board	△	△	△	△	① ② ③ ④ ⑤	DC12V DC5V Send Receive 0V	Connected Application control kit (TCB-PCUC2E)

● : Use in standard, ○ : Available, △: Use by connecting parts sold separately, × : Unavailable

* To use the functions operated by CN60, CN80, CN70 and CN73, which are provided for other P.C.board, use the Application control kit (TCB-PCUC2E) sold separately.

8-3. Test run of indoor unit

■ Cooling/Heating test run check

The test run for cooling/heating can be performed from either indoor remote controller or outdoor interface P.C. board. Refer to the Installation Manual and Service Manual of outdoor unit for the procedure of the test run from an outdoor interface P.C. board.

◆ In case of wired remote controller

<RBC-AMT∗∗∗>

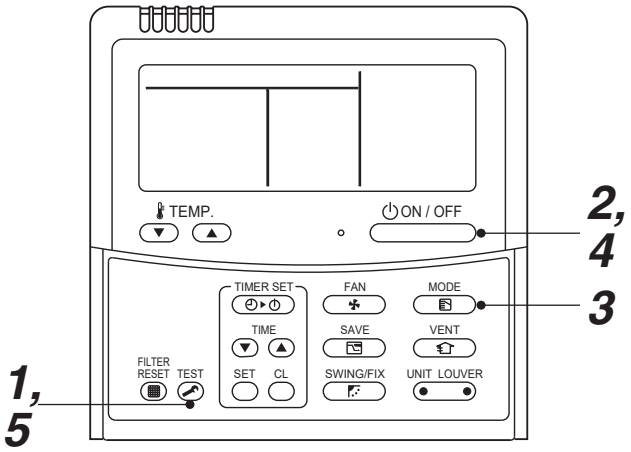

Procedure	Operation contents
1	Push [TEST] button for 4 seconds or more. [TEST] is displayed at the display part and the mode enters in TEST mode. 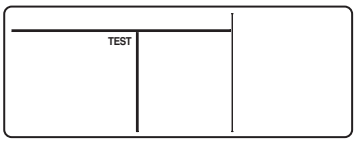
2	Push [ON/OFF] button.
3	Change the mode from [COOL] to [HEAT] using [MODE] button. • Do not use [MODE] button for other mode except [COOL]/[HEAT] modes. • The temperature cannot be adjusted during test run. • The trouble detection is performed as usual. 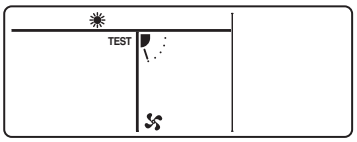
4	After test run, push [ON/OFF] button to stop the operation. (Display on the display part is same to that in Procedure 1 .)
5	Push [TEST] button to clear the TEST mode. ([TEST] display in the display part disappears and status becomes the normal stop status.) 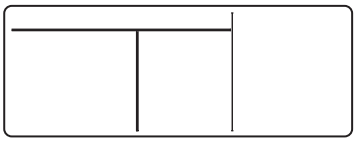

Note) The test run returns to the normal operation after 60 minutes.

<RBC-ASCU11-∗>

Be sure to stop the air conditioner before making settings.

(Change the setup while the air conditioner is not working.)

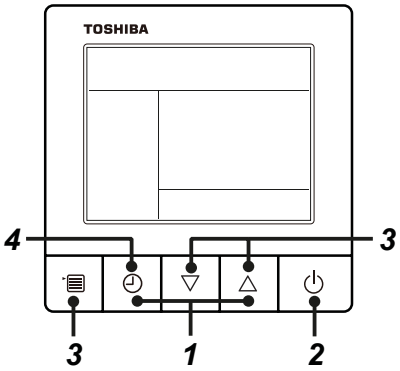

1 **Push and hold OFF timer button and [△] setting button simultaneously for 10 seconds or more. [TEST] is displayed on the display part and the test run is permitted.**

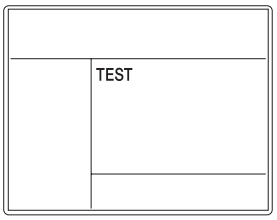

2 **Push ON/OFF button.**

3 **Push menu button to select the operation mode. Select [❄ Cool] or [☼ Heat] with [▽] [△] setting button.**

- Do not run the air conditioner in a mode other than [Cool] or [Heat].
- The temperature setting function does not work during test run.
- The check code is displayed as usual.

4 **After the test run, push OFF timer button to stop a test run.**

([TEST] disappears on the display and the air conditioner enters the normal stop mode.)

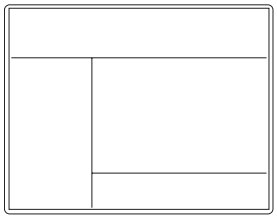

◆In case of wireless remote controller

1 Turn on the power of the air conditioner.
When power is turned on for the first time after installation, it takes approx. 5 minutes until the remote controller becomes available. In the case of subsequent power-on, it takes approx. 1 minute until the remote controller becomes available.
Execute a test run after the predetermined time has passed.

2 Push “ON/OFF” button on the remote controller, select [Cool] or [Heat] with “MODE” button, and then select [HIGH] with “FAN” button.

3

Cooling test run	Heating test run
Set the temperature to 17 ˚C with the temp. setup buttons.	Set the temperature to 30 ˚C with the temp. setup buttons.

4

Cooling test run	Heating test run
After confirming a signal receiving sound “beep” immediately set the temperature to 18 ˚C with the temp. setup buttons.	After confirming a signal receiving sound “beep” immediately set the temperature to 29 ˚C with the temp. setup buttons.

5

Cooling test run	Heating test run
After confirming a signal receiving sound “beep” immediately set the temperature to 17 ˚C with the temp. setup buttons.	After confirming a signal receiving sound “beep” immediately set the temperature to 30 ˚C with the temp. setup buttons.

6 Repeat procedures ***4*** → ***5*** → ***4*** → ***5***.
Indicators “Operation” (green), “Timer” (green), and “Ready” (orange) in the wireless receiver section flash in approx. 10 seconds, and the air conditioner starts operation. If any of these indicators does not flash, repeat procedures 2 to 5.

7 Upon completion of the test run, push “ON/OFF” button to stop operation.

<Overview of test run operations using the wireless remote controller>

▼ Cooling test run:
ON/OFF → 17 °C → 18 °C → 17 °C → 18 °C → 17 °C → 18 °C → 17 °C → (test run) → ON/OFF

▼ Heating test run:
ON/OFF → 30 °C → 29 °C → 30 °C → 29 °C → 30 °C → 29 °C → 30 °C → (test run) → ON/OFF

■ Check function for operation of indoor unit (Functions at indoor unit side)

This function is provided to check the operation of the indoor unit singly without communication with the remote controller or the outdoor unit. This function can be used regardless of operation or stop of the system. However, if using this function for a long time, a trouble of the equipment may be caused. Limit using this function within several minutes.

[How to operate]

1) Short-circuit CHK pin (CN71 on the indoor P.C. board).
   The operation mode differs according to the indoor unit status in that time.
   Normal time: Both float SW and fan motor are normal.
   Abnormal time: Either one of float SW or fan motor is abnormal.
2) Restricted to the normal time, if short-circuiting DISP pin (CN72 on the indoor P.C. board) in addition to short-circuit of CHK pin (CN71 on the indoor P.C. board), the minimum opening degree (30 pls) can be set to the indoor PMV only.
   When open DISP pin, the maximum opening degree (1500 pls) can be obtained again.
   - For the detailed positions of CHK pin (CN71 on indoor P.C. board) and DISP pin (CN72 on indoor P.C. board),
     refer to the indoor P.C. board.

[How to clear]

Open CHK pin. While the system is operating, it stops once but automatically returns to operation after several minutes.

	Short-circuit of CHK pin		
	Normal time		Abnormal time
	DISP pin open	DISP pin short circuit	
Fan motor	(H)	(H)	Stop
Indoor PMV (*)	Max. opening degree (1500 pls)	Min. opening degree (30 pls)	Min. opening degree (30 pls)
Louver	Vertical	Vertical	Immediate stop
Communication	All ignored	All ignored	All ignored
P.C. board LED	Lights	Lights	Flashes

* The actual indoor PMV opening degree may differ from the described values due to adjustment depending on PMV types.

- To exchange the indoor PMV coil, set the indoor PMV to Max. opening degree.

8-4. Method to set indoor unit function DN code

(When performing this task, be sure to use a wired remote controller.)

◆ Procedure

Be sure to stop the air conditioner before making settings

<RBC-AMT✱✱✱>

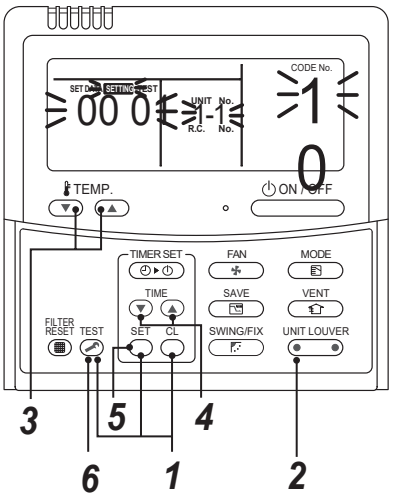

1 **Push the TEST + SET + CL buttons simultaneously and hold for at least 4 seconds.**
The unit No. displayed first is the address of the header indoor unit in group control.
Then the fan and louver of the selected indoor unit move.

2 **Each time the UNIT LOUVER button (left side of the button) is pressed, one of the indoor unit Nos. under group control is displayed in turn. Then the fan and louver of the selected indoor unit move.**

3 **Use the TEMP. button to select the CODE No. (DN code) of the desired function.**

4 **Use the TIME button to select the desired SET DATA associated with the selected function.**

5 **Push the SET button. (The display changes from flashing to steady.)**
- To change the selected indoor unit, go back to step ***2***.
- To change the selected function, go back to step ***3***.

6 **When the SET button is pushed, the system returns to normal off state.**

<RBC-ASCU11-✱>

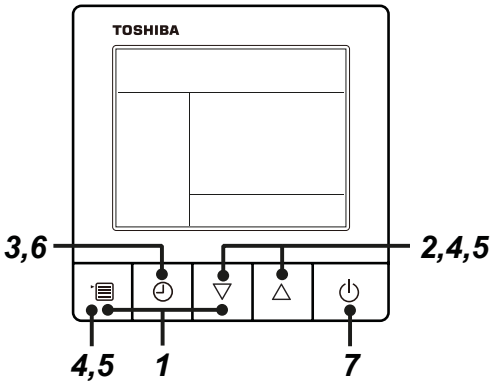

1 **Push and hold menu button and [▽] setting button simultaneously for 10 seconds or more.**
- After a while, the display flashes as shown in the figure. “ALL” is displayed as indoor unit numbers during initial communication immediately after the power has been turned on.

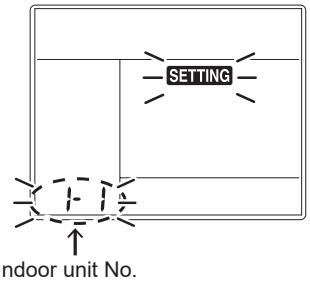

2 **Each time [▽] [△] setting button is pushed, indoor unit numbers in the group control change cyclically. Select the indoor unit to change settings for.**
- The fan of the selected indoor unit runs . The indoor unit can be confirmed for which to change settings.

3 **Push OFF timer button to confirm the selected indoor unit.**

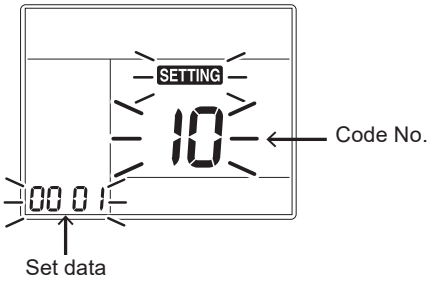

4 **Push the menu button to make Code No. [✱✳] flash. Change Code No. [✱✳] with [▽] [△] setting button.**

5 **Push the menu button to make Set data [✱✱✱✳] flash. Change Set data [✱✱✱✳] with [▽] [△] setting button.**

6 **Push OFF timer button to complete the set up.**

- To change other settings of the selected indoor unit, repeat from Procedure ***4***.

7 **When all the settings have been completed, push ON/OFF button to finish the settings. (Return to the normal mode)**

" SETTING " flashes and then the display content disappears and the air conditioner enters the normal stop mode. (The remote controller is unavailable while " SETTING " is flashing.)

- To change settings of another indoor unit, repeat from Procedure ***1***.

Indoor unit function Code No. (DN Code) table

(includes functions needed to perform applied control on site)

DN	Item	Description	At shipment
01	Filter display delay timer	0000: None 0001: 150H 0002: 2500H 0003: 5000H 0004: 10000H	Depending on model type
02	Dirty state of filter	0000: Standard 0001: High degree of dirt (Half of standard time)	0000: Standard
03	Central control address	0001: No.1 unit to 0064: No.64 unit … TCC-LINK 0001: No.1 unit to0128: No.128 unit … TU2C-LINK 00Un: Unfixed (When using U series remote controller) 0099: Unfixed (Other than U series remote controller)	00Un/0099: Unfixed *1
04	Specific indoor unit priority	0000: No priority 0001: Priority	0000: No priority
06	Heating temp. shift	0000: 0 °C 0001: +1 °C 0002: +2 °C to 0010: +10 °C (Up to +6 recommended)	Depending on model type
0b	Demand control (CN73 / CN4)	0000: Demand input 0002: Card input setup.3 0004: Card input setup.4 0005: Fire alarm input (Normal close) 0007: Card input setup.5 0009: Card input setup.2 0001: O2 sensor input 0003: Fire alarm input (Normal open) 0006: Notice cord (202) 0008: Card input setup.1	0000: Demand input
0d	Existence of [AUTO] mode	0000: Provided 0001: Not provided (Automatic selection from connected outdoor unit)	0001: Not provided
0F	Cooling only	0000: Heat pump 0001: Cooling only (No display of [AUTO] [HEAT])	0000: Heat pump
10	Type	Refer to **Type DN code "10" list**	Depending on model type
11	Indoor unit capacity	0000: Unfixed 0001 to 0044 Refer to Indoor Unit Capacity DN code "11" list	According to capacity type
12	Line address	0001: No.1 unit to 0064: No.30 unit … TCC-LINK 0001: No.1 unit to0128: No.128 unit … TU2C-LINK 00Un: Unfixed (When using U series remote controller) 0099: Unfixed (Other than U series remote controller)	00Un/0099: Unfixed *1
13	Indoor unit address	0001: No.1 unit to 0064: No.64 unit … TCC-LINK 0001: No.1 unit to0128: No.128 unit … TU2C-LINK 00Un: Unfixed (When using U series remote controller) 0099: Unfixed (Other than U series remote controller)	00Un/0099: Unfixed *1
14	Group address	0000: Individual 0001: Header unit of group 0002: Follower unit of group 00Un: Unfixed (When using U series remote controller) 0099: Unfixed (Other than U series remote controller)	00Un/0099: Unfixed *1
19	Louver type (Air direction adjustment)	0000: No louver 0001: Swing only 0004: (4-way Air Discharge Cassette type, etc.)	Depending on model type
1E	Temp difference of [AUTO] mode selection COOL → HEAT, HEAT → COOL	0000: 0 °C to 0010: 10 °C (Ts ± 5°C) Ts:Remote controller setup temp.	0003: 3 °C (Ts ±1.5 °C)
28	Automatic restart of power failure	0000: None 0001: Restart	0000: None
2A	Selection of option/Trouble input (TCB-PCUC2E: CN3)	0000: Filter input 0001: Alarm input 0002: None (Air washer, etc.)	0002: None
2E	HA terminal (CN61) select	0000: Usual 0001: Card input setup.1 (3) 0003: Card input setup.2 (4) 0002: Fire alarm input (arbiter contact) 0004: Notice cord (201) 0005: Card input setup.5	0000: Usual (HA terminal)
31	Ventilating fan control	0000: Unavailable 0001: Available	0000: Unavailable
32	TA sensor selection	0000: Body TA sensor 0001: Remote controller sensor	0000: Body TA sensor

<table>
<tr><th>DN</th><th>Item</th><th>Description</th><th>At shipment</th></tr>
<tr><td>33</td><td>Temperature unit select</td><td>0000: °C 0001: °F</td><td>0000: °C</td></tr>
<tr><td rowspan="2">5d</td><td>High-ceiling selection
(Selection of air volume)</td><td><table><tr><td></td><td>Type</td><td>UP0151, UP0181, UP0241, UP0271</td></tr><tr><td></td><td>Discharge</td><td>1-way</td></tr><tr><td>0000</td><td>Standard
(At shipment)</td><td>2.8m</td></tr><tr><td>0001</td><td>High ceiling ①</td><td>3.2m</td></tr></table></td><td>0000: Standard</td></tr>
<tr><td>Built-in filter</td><td>0000 : Standard filter (At shipment)</td><td></td></tr>
<tr><td>60</td><td>Timer setting
(wired remote controller)</td><td>0000: Available
(can be performed)
0001: Unavailable
(cannot be performed)</td><td>0000: Available</td></tr>
<tr><td>77</td><td>Dual set point</td><td>0000: Unavailable 0002: Available</td><td>0000: Unavailable</td></tr>
<tr><td>79</td><td>Alarm output setup of the header unit</td><td>0000: Not including the state of following unit
0001: Including the state of following unit</td><td>0000: Not including the state of following unit</td></tr>
<tr><td>b3</td><td>Soft cooling</td><td>0000: Unavailable 0001: Available</td><td>0001: Available</td></tr>
<tr><td>b5</td><td>Occupancy sensor/
Wireless Remote controller
Provided / None</td><td>0000: None
0001: Occupancy sensor provided
0002: Wireless remote controller provided</td><td>0000: None</td></tr>
<tr><td>b6</td><td>Occupancy sensor
Enable / Invalid
(Absence time judgment time)</td><td>0000: Invalid
0001: 30min.
0002: 60min.
0004: 120min.
0005: 150min.</td><td>0002: Enable
(60 min.)</td></tr>
<tr><td>b7</td><td>Occupancy sensor operation at absent time</td><td>0000: Stand by 0001: operation stop</td><td>0000: Stand by</td></tr>
<tr><td>CF</td><td>4-way cassette type model name</td><td>0000: Standard Model 0001: larger case model</td><td>Depending on model type</td></tr>
<tr><td>d0</td><td>Whether the power saving mode can be set by the remote controller</td><td>0000: Invalid 0001: Valid</td><td>0001: Valid</td></tr>
<tr><td>E0</td><td>Destination</td><td>0000: Japan
0003: China
0004: Global</td><td>0004: Global</td></tr>
<tr><td>E6</td><td>Wireless remote controller A-B selection</td><td>0000: A 0001: B</td><td>0000: A</td></tr>
<tr><td>F0</td><td>Swing mode</td><td>0000 : Out of sync swing
0001 : 4-way sync swing
0002 : Dual swing
0003 : Cycle swing</td><td>0000: Not including 4-way
0001: 4-way (Compact)</td></tr>
<tr><td>F1</td><td>Louver fixed position
(Louver No.1)</td><td>0000 : Release
0001 : Horizontal discharge position
0005 : Downward discharge position</td><td>0000: Not fixed</td></tr>
<tr><td>F2</td><td>Louver fixed position
(Louver No.2)</td><td>0000 : Release
0001 : Horizontal discharge position
0005 : Downward discharge position</td><td>0000: Not fixed</td></tr>
<tr><td>F3</td><td>Louver fixed position
(Louver No.3)</td><td>0000 : Release
0001 : Horizontal discharge position
0005 : Downward discharge position</td><td>0000: Not fixed</td></tr>
<tr><td>F4</td><td>Louver fixed position
(Louver No.4)</td><td>0000 : Release
0001 : Horizontal discharge position
0005 : Downward discharge position</td><td>0000: Not fixed</td></tr>
<tr><td>F6</td><td>Presence of Application control kit
(TCB-PCUC2E)</td><td>0000: None 0001: Exist</td><td>0000: None</td></tr>
<tr><td>FC</td><td>Communication protocol *2</td><td>0000 : TCC-LINK 0003:TU2C-LINK</td><td>0000: TCC-LINK</td></tr>
<tr><td>Fd</td><td>Priority operation mode
(FS unit)</td><td>0000: Heating 0001: Cooling</td><td>0000: Heating</td></tr>
<tr><td>FE</td><td>FS unit address</td><td>0001: No.1 unit to 0064: No.64 unit … TCC-LINK
0001: No.1 unit to 0128: No.128 unit … TU2C-LINK
00Un: Unfixed (When using U series remote controller)
0099: Unfixed (Other than U series remote controller)</td><td>00Un/0099: Unfixed *1</td></tr>
</table>

DN	Item	Description	At shipment
180	Notice code number 01	0000: None 0001 ~ 0255 : Notice code 0129 : Notice code (201) 0130 : Notice code (202) (0001 ~ 0255 : TU2C-LINK only)	0000: None
181	Notice code number 02		0000: None
182	Notice code number 03		0000: None
183	Notice code number 04		0000: None
184	Notice code number 05		0000: None
185	Notice code number 06		0000: None
186	Notice code number 07		0000: None
187	Notice code number 08		0000: None
188	Notice code number 09		0000: None
189	Notice code number 10		0000: None
103	Remote controller	0000 : Use 0001 : Do not use • Indoor unit production after Jun-2021 does not need this DN setting. The serial number is 12600042 or upper.	0000 : Use
1FB	Central device control state	0000: No central device control (Remote controller use is possible) 0001: Central device control (Remote controller use is impossible)	0000: No central device control
1FC	Indoor Unit terminating resistance	0000: OFF 0001: ON	0000: OFF

*1 Display order of “00Un”and “0099” varies depending on remote controller models or communication types.

For Central control address (DN [03]), Indoor unit address (DN [13]), FS unit address (DN [FE])

Remote controller	Communication type	Display order
U series	TU2C-LINK	··· ⇔ 0128 ⇔ 00Un ⇔ 0001 ⇔ ···
	TCC-LINK	··· ⇔ 0064 ⇔ 00Un ⇔ 0001 ⇔ ···
Other than U series	TCC-LINK	··· ⇔ 0064 ⇔ 0099 ⇔ 0001 ⇔ ···

For Line address (DN [12])

Remote controller	Communication type	Display order
U series	TU2C-LINK	··· ⇔ 0128 ⇔ 00Un ⇔ 0001 ⇔ ···
	TCC-LINK	··· ⇔ 0030 ⇔ 00Un ⇔ 0001 ⇔ ···
Other than U series	TCC-LINK	··· ⇔ 0030 ⇔ 0099 ⇔ 0001 ⇔ ···

For Group address (DN [14])

Remote controller	Communication type	Display order
U series	TU2C-LINK TCC-LINK	··· ⇔ 0002 ⇔ 00Un ⇔ 0000 ⇔ ···
Other than U series	TCC-LINK	··· ⇔ 0002 ⇔ 0099 ⇔ 0000 ⇔ ···

*2 Communication protocol can be automatically switched with the setup in the outdoor unit during installation.

Type
DN code "10"

Value	Type	Model
0003	1-way cassette	MMU-UP****YHP-E(TR)

Indoor Unit Capacity
DN code "11"

■ **1-way cassette type**

Value	Capacity
0000*	Invalid
0007	0151 type
0009	0181 type
0011	0241 type
0012	0271 type

* "0000" is default value stored in EEPROM mounted on service P.C. board

8-5. Applied control of indoor unit

■ Control system using Remote location ON/OFF control box (TCB-IFCB-4E2) Wiring and setting

- In the case of group control, the control system functions as long as it is connected to one of the indoor units (control P.C. board) in the group. If it is desired to access the operation and trouble statuses of other units, relevant signals must be brought to it from those units individually.

1. Control items

(1) Start / Stop input signal	Start / stop of unit
(2) In-operation signal	Output present while unit in normal operation
(3) Check code Output	present while alarm (e.g. serial communication trouble or operation of protective device for indoor / outdoor unit) being activated

2. Wiring diagram of control system using Remote location ON/OFF control box (TCB-IFCB-4E2)

Input IFCB-4E2: No-voltage ON / OFF serial signal
Output No-voltage contact (in-operation and check code indication)
Contact capacity: Max. AC 240 V, 0.5 A

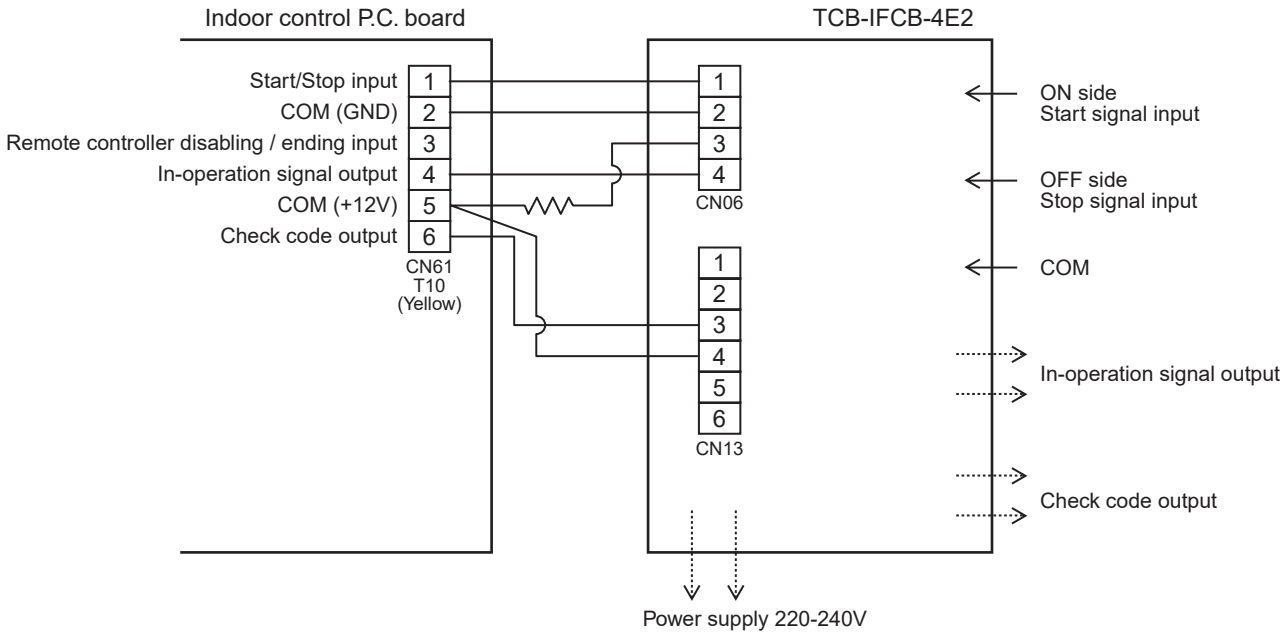

■ Ventilating fan control from remote controller [Function]

- The start / stop operation can be operated from the wired remote controller when air to air heat exchanger or ventilating fan is installed in the system.
- The fan can be operated even if the indoor unit is not operating.
- Use a fan which can receive the no-voltage normally-open contact as an outside input signal.
- In a group control, the units are collectively operated and they cannot be individually operated.

1. Operation

Handle a wired remote controller in the following procedure.

* Use the wired remote controller during stop of the system.

* Be sure to set up the wired remote controller to the header unit. (Same in group control)

* In a group control, if the wired remote controller is set up to the header unit, both header and follower units are simultaneously operable.

<RBC-AMT∗∗∗>

1 **Push concurrently SET + CL + TEST buttons for 4 seconds or more.**

The unit No. displayed firstly indicates the header indoor unit address in the group control.
In this time, the fan of the selected indoor unit turns on.

2 **Every pushing UNIT LOUVER button (left side of the button), the indoor unit numbers in group control are displayed successively.**

In this time, the fan of the selected indoor unit only turns on.

3 **Using the setup temp ▼ or ▲ button, specify the CODE No. 31.**

4 **Using the timer time ▼ or ▲ button, select the SET DATA. (At shipment: 0000)**

The setup data are as follows:

SET DATA	Handling of operation of air to air heat exchanger or ventilating fan
0000	Unavailable (At shipment)
0001	Available

5 **Push SET button. (OK if display goes on.)**

- To change the selected indoor unit, go to the procedure ***2***).
- To change the item to be set up, go to the procedure ***3***).

6 **Pushing TEST returns the status to the usual stop status.**

* The ventilating fan control may be unavailable depending on the remote controllers.
(RBC-ASCU11-∗ does not have this function.)

2. Wiring

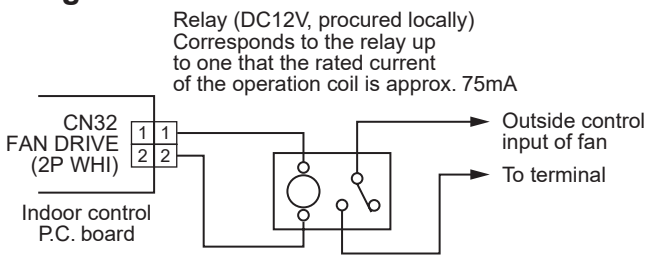

Note) Determine the cable length between the indoor control P.C. board and the relay within 2m.

■ Auto-off feature control

[Function]

- This function controls the indoor units individually. It is used when the start operation from outside is unnecessary but the stop operation is necessary.
- A card switch box or card lock helps protect customers from forgetting to turn off the indoor unit. (not including the following Card Input 3)
- It is connected with connector on the indoor control P.C. board, and switched with the Code No. and jumper wire setup for use.
- Available connectors are CN61 or CN73. For models without CN73, CN4 on the optional Application control kit (TCB-PCUC2E) can be used.

* Leaving-ON prevention control cannot be set with both CN61 and CN73 (CN4).
If both of them are set, CN73 (CN4) setting automatically turns to a factory default.

[Setup method]

(1) Wiring

Connecting to the CN61 connector

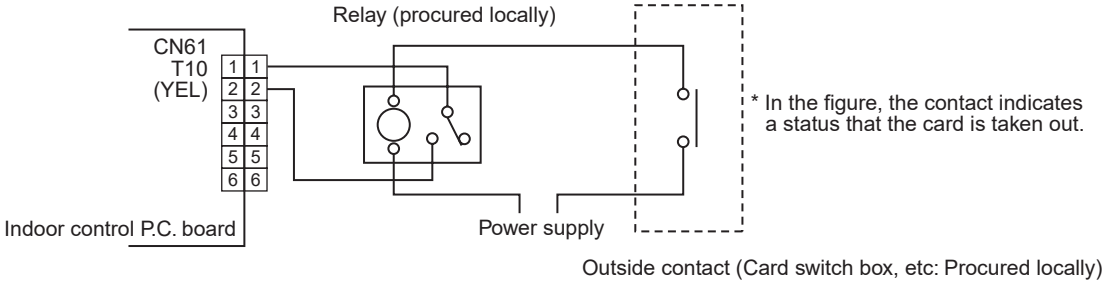

NOTE) Determine the cable length between the indoor control P.C. board and the relay within 3m.

Connecting to the Application control kit (TCB-PCUC2E, connector : CN4)

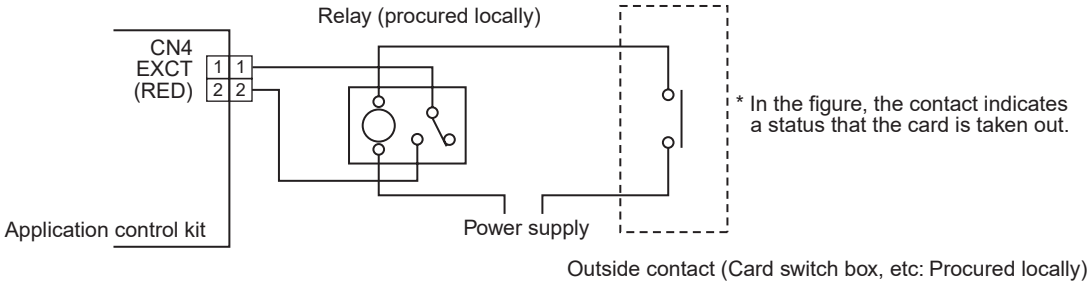

NOTE) Determine the cable length between the indoor control P.C. board and the relay within 3m.

(2) Code (DN) setup

Set Code (DN) according to “8-4. Method to set indoor unit function DN code”.

Connector	Jumper wire (J01)	Code No. (DN)	Set data	Function
CN61	Short-circuit (Factory default)	002E	0000 (Factory default)	"HA normal setup" (pulse)
			0001	"Card Input 1" setup
			0003	"Card Input 2" setup
			0005	"Card Input 5" setup
	Open-circuit (cut)		0000 (Factory default)	"HA normal setup" (Static)
			0001	"Card Input 3" setup
			0003	"Card Input 4" setup
CN73 (CN4)	Short-circuit (Factory default) or Open-circuit (cut)	000b	0000 (Factory default)	"EXCT demand" setup (Forced thermostat-OFF)
			0002	"Card Input 3" setup
			0004	"Card Input 4" setup
			0007	"Card Input 5" setup
			0008	"Card Input 1" setup
			0009	"Card Input 2" setup

* If you set “Card Input 1 to 5” for Code No. of CN61 and CN73, Code No. 000b setup becomes unavailable and the functions of Card Input 1 to 5 in CN73 cannot be used.

[Control items]

Function	External contact terminal	
	Close (Status that card is inserted)	Open (Status that card is taken out)
Card Input 1	Manual prohibition release (Manual operation)	Manual prohibition (Operation stop)
Card Input 2	Manual prohibition release (Automatic operation)	Manual prohibition (Operation stop)
Card Input 3	Operation status continues (Do nothing)	Operation status continues and setting temperature changes (COOL/DRY: 29ºC, HEAT: 18ºC)
Card Input 4	Manual prohibition release (The status returns to operating condition before removing the card.)	Manual prohibition (Operation stop)
Card Input 5	1) To change a setting temperature by changing data at DN code No. 172 to 174. 2) The operation mode can be set by changing data (0000, 0001, 0002) at DN code No. 16b. 0000: operation mode is the same at the current mode. (factory setting default) 0001: operation mode returns to the previous mode when card was inserted. (in case of the previous mode is off operation, the operation mode is also off.) 0002: operation mode starts at the same previous mode when the card was inserted. (the operation mode is on operation even the previous mode is off operation.) See contents below for DN settings and detailed operations.	1) To change a setting temperature, fan speed and wind direction by changing data at DN code No. 16C to 171. 2) The operation mode can be set by changing data (0000, 0001) at DN code No. 16A. 0000: operation mode is the same at the current mode. (factory setting default) 0001: operation automatically starts. See contents below for DN settings and detailed operations.

* For the card switch box that does not involve contact operation described above, convert signals with a relay including a normally-closed contact.

[Card input setup.5 Code (DN)]

DN	Item	Description	At shipment
16C	Open mode Set temp. (Cool, Dry)	-0015 : -15ºC to 0060 : 60ºC	0027 : 27ºC
16d	Open mode Set temp. (Heat)	-0015 : -15ºC to 0060 : 60ºC	0020 : 20ºC
16E	Open mode Set temp. (Auto)	-0015 : -15ºC to 0060 : 60ºC	0024 : 24ºC
16F	Open mode Fan speed (All operation mode)	0000 : No change 0001 : HH 0002 : H 0003 : L	0000 : No change
170	Open mode Wind direction (Cool, Dry, Fan)	0000 : No change 0001 : F1 0002 : F2 0003 : F3	0000 : No change
171	Open mode Wind direction (Heat)	0000 : No change 0001 : F1 0002 : F2 0003 : F3 0004 : F4 0005 : F5	0000 : No change
16A	Open mode Operation	0000 : No change 0001 : Run operation	0000 : No change
172	Close mode Set temp. (Cool, Dry)	-0015 : -15ºC to 0060 : 60ºC	0024 : 24ºC
173	Close mode Set temp. (Heat)	-0015 : -15ºC to 0060 : 60ºC	0024 : 24ºC
174	Close mode Set temp. (Heat)	-0015 : -15ºC to 0060 : 60ºC	0024 : 24ºC
16b	Close mode Operation	0000 : No change 0001 : Card ON mode operation 0002 : Run operation (Card ON mode setting)	0000 : No change

[The example of Card Input 5 setting]

Case.	Code No. (DN) setting									External contact terminal	
	[16A] data	[16b] data	[16C] data	[16d] data	[16F] data	[170] data	[171] data	[172] data	[173] data	Close (Status that card is inserted)	Open (Status that card is taken n out)
(1)	0000	0000	0027	0020	0000	0000	0000	0024	0024	• The operation mode continues running at the same as the current mode. • The setting temperature of cooling/dry and heating mode is changed to 24ºC and 24ºC respectively due to change in code No. 172, 173.	• The operation mode continues running at the same as the current mode. • The setting temperature of cooling/dry and heating mode is changed to 27ºC and 20ºC respectively due to change in code No. 16C, 16d.
(2)*	0000	0001	0027	0020	0003	0001	0001	0024	0024	• The operation mode is running at the same mode as the last time when the card was inserted due to change in code no. 16b. * The operation mode will be off if the mode at the last time was in off operation. Also, the fan speed will the same as the last time when the card is inserted. • The setting temperature of cooling/dry and heating mode is changed to 24ºC and 24ºC respectively due to change in code No. 172, 173.	• The operation mode continues running at the same as the current mode. • The setting temperature of cooling/dry and heating mode is changed to 27ºC and 20ºC respectively due to change in code no. 172, 173. • The fan speed for all operation modes is changed due to change in code no.16F. • The wind direction of Cooling/dry/fan and heating mode are changed due to change in code No. 170, 171 respectively.
(3)*	0000	0002	0027	0020	0003	0001	0001	0024	0024	• The operation mode is running at the same mode as the last time when the card was inserted. Also, the operation mode will be on even the mode was in off operation at the last time due to change in code no. 16B. * The fan speed will the same as the last time when the card is inserted. • The setting temperature of cooling/dry and heating mode is changed to 24ºC and 24ºC respectively due to change in code No. 172, 173.	Same operation as case (2)
(4)	0001	0000	0027	0020	0003	0001	0001	0024	0024	• The operation mode continues running at the same as the current mode. • The setting temperature of cooling/dry and heating mode is changed to 24ºC and 24ºC respectively due to change in code No. 172, 173.	• Due to change in code no. 16A, the operation mode will be as below. • When the operation is ON, the operation mode will continue running at the same as the current mode. • When the operation is OFF, the air conditioner will turn on automatically. • The setting temperature of cooling/dry and heating mode is changed to 27ºC and 20ºC respectively due to change in code No. 172, 173. • The fan speed for all operation modes is changed due to change in code no.16F. • The wind direction of Cooling/dry/fan and heating mode are changed due to change in code No. 170, 171 respectively.

* The history operation mode is only recorded when the card is inserted even if the operation mode is changed when the card is taken out, there is no related to the history operation mode.

■ Power peak-cut from indoor unit

When the relay is turned on, a forced thermostat OFF operation starts.

- For indoor P.C. boards other than MCC-1643, the “EXCT” is input with connector CN73 on the P.C. board. MCC-1643 requires Application control kit (TCB-PCUC2E) for input of a forced thermostat OFF “EXCT”. Please refer to the manual of Application control kit for a detailed setting.

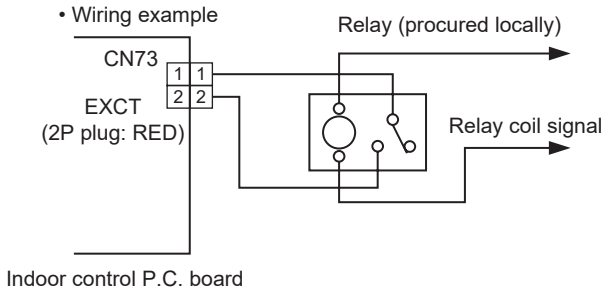

Note) Determine the cable length between the indoor or outdoor control P.C. board and the relay within 2 m.

■ Notice code signal

Notice code is a function dedicated to TU2C-Link communication.
See service manual for u series outdoor unit for details of Notice code.

[Function]

- Notice Code is issued if there is signal input to connector of outdoor unit P.C. board. This can be used in cases such as when confirming state of outdoor unit (filter clogging, etc.) by air conditioner system.
- Connector that can be used is CN61 or CN73. CN4 of separately-sold "option input/output P.C. board (TCB-PCUC2E)" can be used for models that do not have CN73.
- Used by switching functions with settings of Code No. (DN Code).
- Notice Code is continuously issued while input signal is ON.

[Setup method]

(1) Wiring

Connecting to the CN61 connector

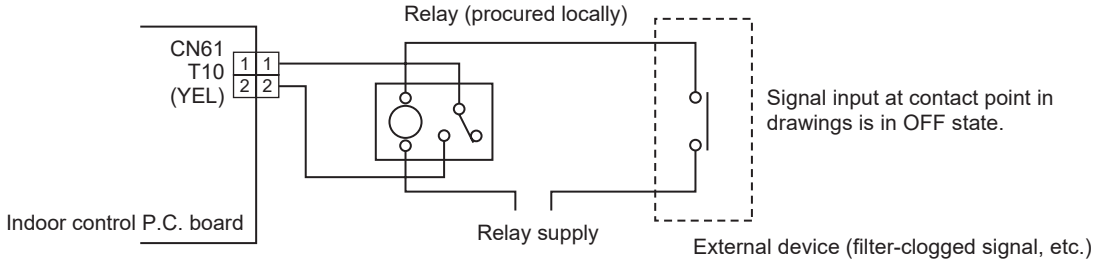

Note) Determine the cable length between the indoor control P.C. board and the relay within 3m.

Connecting to the Application control kit (TCB-PCUC2E, connector : CN4)

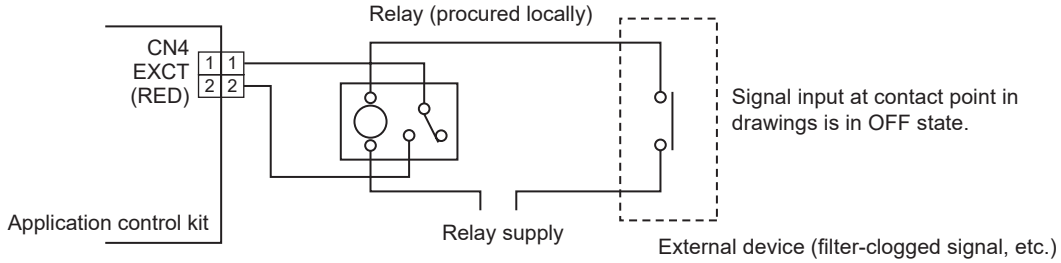

Note) Determine the cable length between the indoor control P.C. board and the relay within 3m.

(2) Code (DN) setup and Notice code
Set Code (DN) according to “8-4. Method to set indoor unit function DN code”.

Connector	Code No. (DN)	Set data	Notice code
CN61	002E	0004	201
CN73 (CN4)	000B	0006	202

* Setting of Code No. (DN Code) is necessary to display Notice code mark at remote controller.
Set data corresponding to Notice code to be used to one of Code No. 180 to 189, in accordance with following table.
In case where data other than 0000 is already set, set to other Code No. (DN Code).

Code No. (DN)	Set data	Notice code
0180 to 0189	0000	OFF (Factory default)
	0129	201
	0130	202

* It may take up to ten minutes to be displayed on remote controller after Notice code is issued.

■ Manual address setting using the remote controller

Procedure when setting indoor units' addresses first under the condition that indoor wiring has been completed and outdoor wiring has not been started (manual setting using the remote controller)

▼ Wiring example of 2 refrigerant lines

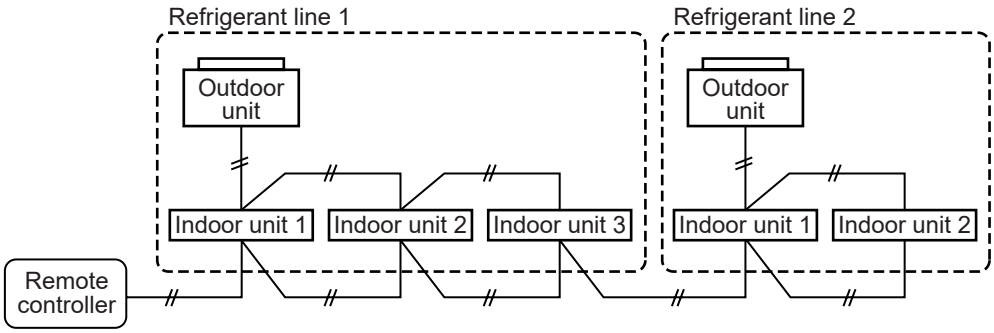

Line (system) address	1	1	1		2	2
Indoor unit address	1	2	3		1	2
Group address	1 Header unit	2 Follower unit	2 Follower unit		2 Follower unit	2 Follower unit

In the example above, disconnect the remote controller connections between the indoor units and connect a wired remote controller to the target unit directly before address setting.

<RBC-AMT∗∗∗>

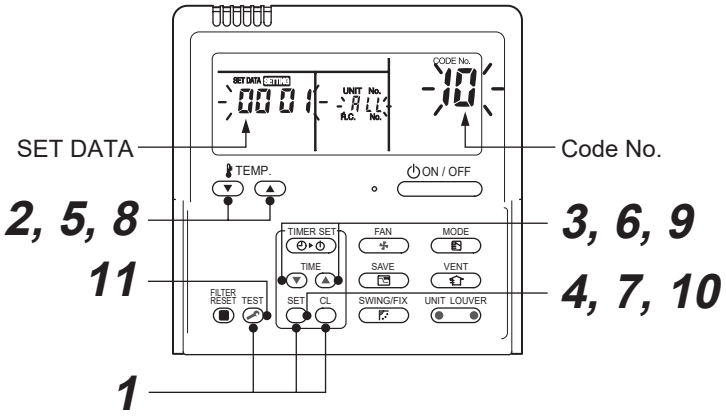

Pair the indoor unit to set and the remote controller one-to-one.

Turn on the power.

1 **Push and hold the SET, CL and TEST buttons at the same time for more than 4 seconds.**
LCD starts flashing.

<Line (system) address>

2 **Push the TEMP. ▼ / ▲ buttons repeatedly to set the CODE No. to 12 .**

3 **Push the TIME ▼ / ▲ buttons repeatedly to set a system address.**
(Match the address with the address on the interface P.C. board of the header outdoor unit in the same refrigerant line.)

4 **Push SET button.**
(It is OK if the display turns on.)

<Indoor unit address>

5 **Push the TEMP. ▼ / ▲ buttons repeatedly to set the CODE No. to 13 .**

6 **Push the TIME ▼ / ▲ buttons repeatedly to set an indoor unit address.**

7 **Push the SET button.**
(It is OK if the display turns on.)

<Group address>

8 **Push the TEMP. ▼ / ▲ buttons repeatedly to set the CODE No. to 14 .**

9 **Push the TIME ▼ / ▲ buttons repeatedly to set a group address. If the indoor unit is individual, set the address to 0000 ; header unit, 0001 ; follower unit, 0002 .**

Individual : 0000
Header unit : 0001 } In case of group control
Follower unit : 0002

10 **Push the SET button.**
(It is OK if the display turns on.)

11 **Push the TEST button.**
The address setting is complete.
(SETTING flashes. You can control the unit after SETTING has disappeared.)

<RBC-ASCU11-∗>

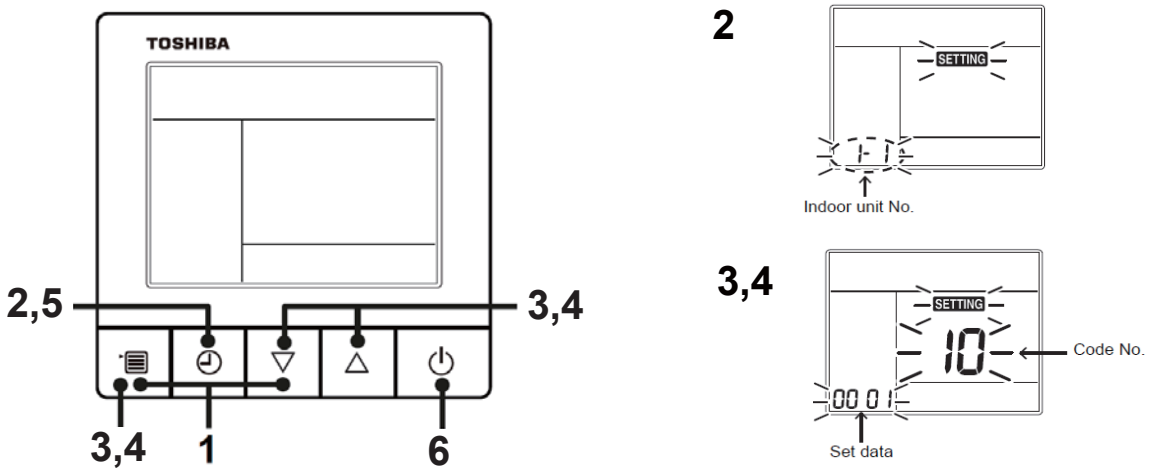

1 **Push and hold the [menu + ▽] buttons at same time for more than 10 seconds.**

2 **Push the [OFF timer] button to confirm the selected indoor unit.**

<Line (system) address>

3 **Push the [menu] button until the CODE No. flashes. And using the [▽ or △] buttons, specify the CODE No.12.**

4 **Push the [menu] button until the SET DATA flashes. And using the [▽ or △] buttons, set a system address.**

5 **Push the [OFF timer] button to confirm the SET DATA.**

<Indoor unit address>

3 **Push the [menu] button until the CODE No. flashes. And using the [▽ or △] buttons, specify the CODE No.13.**

4 **Push the [menu] button until the SET DATA flashes. And using the [▽ or △] buttons, set an indoor unit address.**

5 **Push the [OFF timer] button to confirm the SET DATA.**

<Group address>

3 **Push the [menu] button until the CODE No. flashes. And using the [▽ or △] buttons, specify the CODE No.14.**

4 **Push the [menu] button until the SET DATA flashes. And using the [▽ or △] buttons, set a group address.**
If the indoor unit is individual, set the address to 0000. (header unit : 0001, follower unit : 0002)

Individual	:0000	
Header unit	:0001	In case of group control
Follower unit	:0002	In case of group control

5 **Push the [OFF timer] button to confirm the SET DATA.**

6 **When all the settings have been completed, push the [ON/OFF] button to return to normal mode.**

NOTE

<In the case of combining with outdoor units of Super Modular Multi System u series (SMMS-u)>

- Turn ON DIP switch 1 of SW100 on the header outdoor unit interface P.C. board the lowest system address number.
- After finishing all the settings above, set the address of the central control devices. (For the setting of the central control address, refer to the installation manual of the central control devices.)

<In the case of combining with outdoor units other than Super Modular Multi System u series (SMMS-u)>

- Set a system address for the header outdoor unit of each line with SW13 and 14 of their interface P.C. boards.
- Turn off dip switch 2 of SW30 on the interface P.C. boards of all the header outdoor units connected to the same central control, except the unit that has the lowest address. (For unifying the termination of the wiring for the central control of indoor and outdoor units)
- Connect the relay connectors between the [U1, U2] and [U3, U4] terminals on the header outdoor unit of each refrigerate line.
- After finishing all the settings above, set the address of the central control devices. (For the setting of the central control address, refer to the installation manuals of the central control devices.)

■ Confirming the indoor unit addresses and the position of an indoor unit using the remote controller

◆ Confirming the numbers and positions of indoor units

To know the indoor unit addresses though position of the indoor unit is recognized

▼ When the unit is individual (the indoor unit is paired with a wired remote controller one-to-one), or it is a group-controlled one.

<RBC-AMT∗∗∗>

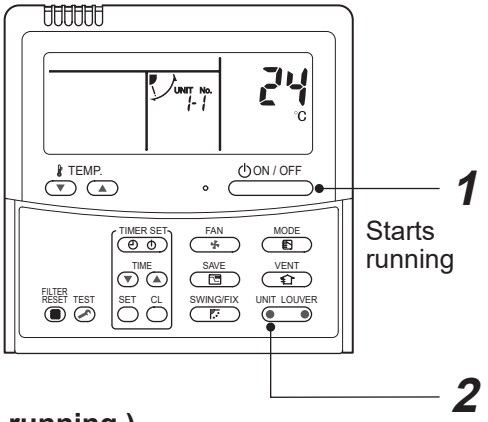

(Execute it while the units are running.)

1 Push the ON / OFF button if the units stop.

2 Push the UNIT LOUVER button (left side of the button).

A unit numbers 1-1 is indicated on the LCD (it will disappear after a few seconds). The indicated number shows the system address and indoor unit address of the unit.
When 2 or more indoor units are connected to the remote controller (group-controlled units), a number of other connected units appears each time you push the UNIT LOUVER button (left side of the button).

<RBC-ASCU11-∗>

There is no such function in the remote controller.

◆To find an indoor unit's position from its address

▼When checking unit numbers controlled as a group

<RBC-AMT∗∗∗>

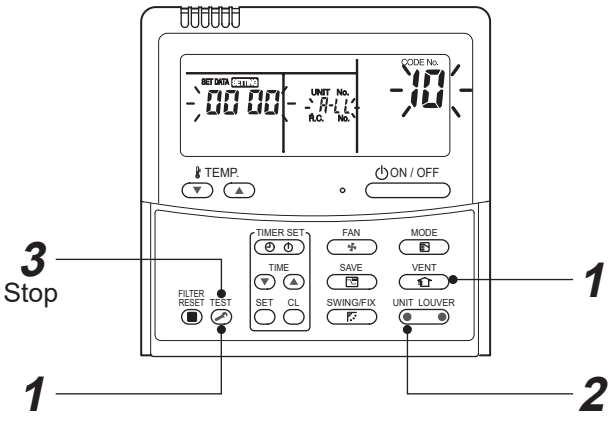

(Execute it while the units are stopped.)
The indoor unit numbers in a group are indicated one after another. The fan and louvers of the indicated units are activated.

1 Push and hold the VENT and TEST buttons at the same time for more than 4 seconds.
- ALL appears on UNIT No. on the LCD display.
- The fans and louvers of all the indoor units in the group are activated.

2 Push the UNIT LOUVER button (left side of the button). Each time you push the button, the indoor unit numbers are indicated one after another.
- The first-indicated unit number is the address of the header unit.
- Only the fan and louvers of the indicated indoor unit are activated.

3 Push the TEST button to finish the procedure.
All the indoor units in the group stop.

<RBC-ASCU11-∗>

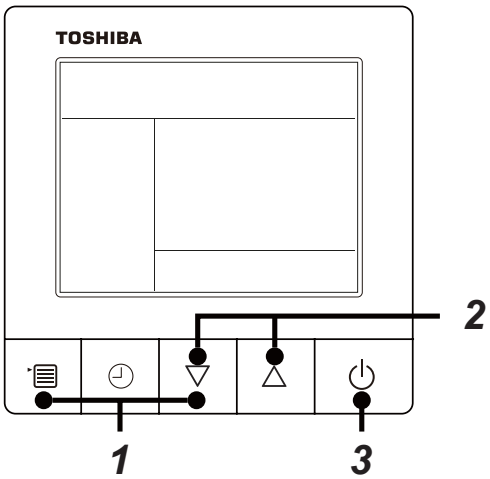

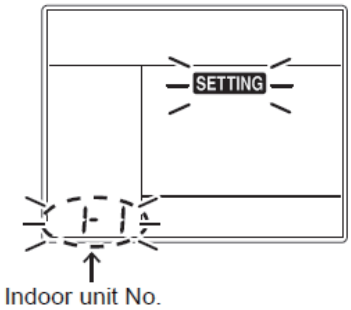

1 Push and hold the [menu + ▽] buttons at same time for more than 10 seconds. e.g.)A unit number 1-1 is indicated on the LCD. The indicated number shows the system address and indoor unit address of the unit.

2 When 2 or more indoor units are connected to the remote controller (group-controlled units), a number of other connected units appears each time you push the [▽ or △] buttons.

3 Push the [ON/OFF] button, return to the normal mode.

▼ **To check all the indoor unit addresses using an arbitrary wired remote controller.**
(When communication wirings of 2 or more refrigerant lines are interconnected for central control)

<RBC-AMT∗∗∗>

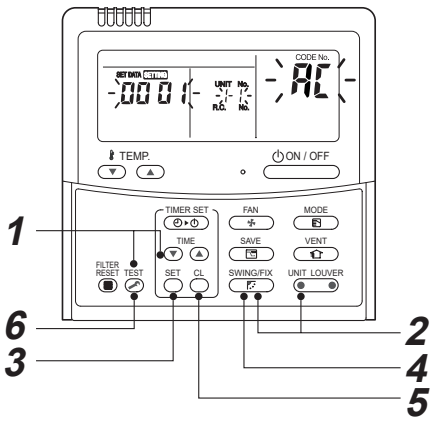

(Execute it while the units are stopped.)

You can check indoor unit addresses and positions of the indoor units in a single refrigerant line.
When an outdoor unit is selected, the indoor unit numbers of the refrigerant line of the selected unit are indicated one after another and the fan and louvers of the indicated indoor units are activated.

1 **Push and hold the TIME ▼ and TEST buttons at the same time for more than 4 seconds. At first, the line 1 and CODE No. AC (Address Change) are indicated on the LCD display. (Select an outdoor unit.)**

2 **Push the UNIT LOUVER button (left side of the button) and SWING/FIX buttons repeatedly to select a system address.**

3 **Push the SET button to confirm the system address selection.**

- The address of an indoor unit connected to the selected refrigerant line is indicated on the LCD display and its fan and louvers are activated.

4 **Push the UNIT LOUVER button (left side of the button). Each time you push the button, the indoor unit numbers of the selected refrigerant line are indicated one after another.**

- Only the fan and louvers of the indicated indoor unit are activated.

◆ To select another system address

5 **Push the CL button to return to step *2*.**

- After returning to step ***2***, select another system address and check the indoor unit addresses of the line.

6 **Push the TEST button to finish the procedure.**

<RBC-ASCU11-∗>

There is no such function in the remote controller.

◆ Changing the indoor unit address using a remote controller

To change an indoor unit address using a wired remote controller.

▼ The method to change the address of an individual indoor unit (the indoor unit is paired with a wired remote controller one-to-one), or an indoor unit in a group.
(The method is available when the addresses have already been set automatically.)

<RBC-AMT∗∗∗>

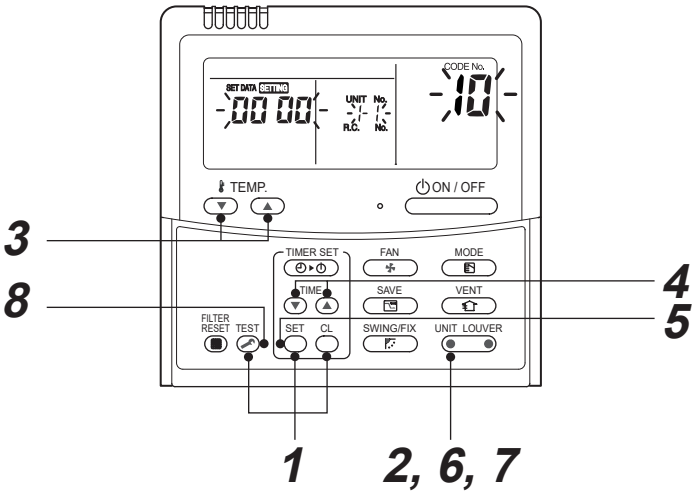

(Execute it while the units are stopped.)

1 **Push and hold the SET, CL, and TEST buttons at the same time for more than 4 seconds.**
(If 2 or more indoor units are controlled in a group, the first indicated UNIT No. is that of the head unit.)

2 **Push the UNIT LOUVER button (left side of the button) repeatedly to select an indoor unit number to change if 2 or more units are controlled in a group. (The fan and louvers of the selected indoor unit are activated.)**
(The fan of the selected indoor unit is turned on.)

3 **Push the TEMP. ▼ / ▲ buttons repeatedly to select 13 for CODE No.**

4 **Push the TIME ▼ / ▲ buttons repeatedly to change the value indicated in the SET DATA section to that you want.**

5 **Push the SET button.**

6 **Push the UNIT LOUVER button (left side of the button) repeatedly to select another indoor UNIT No. to change.**
Repeat steps ***4*** to ***6*** to change the indoor unit addresses so as to make each of them unique.

7 **Push the UNIT LOUVER button (left side of the button) to check the changed addresses.**

8 **If the addresses have been changed correctly, push the TEST button to finish the procedure.**

<RBC-ASCU11-∗>

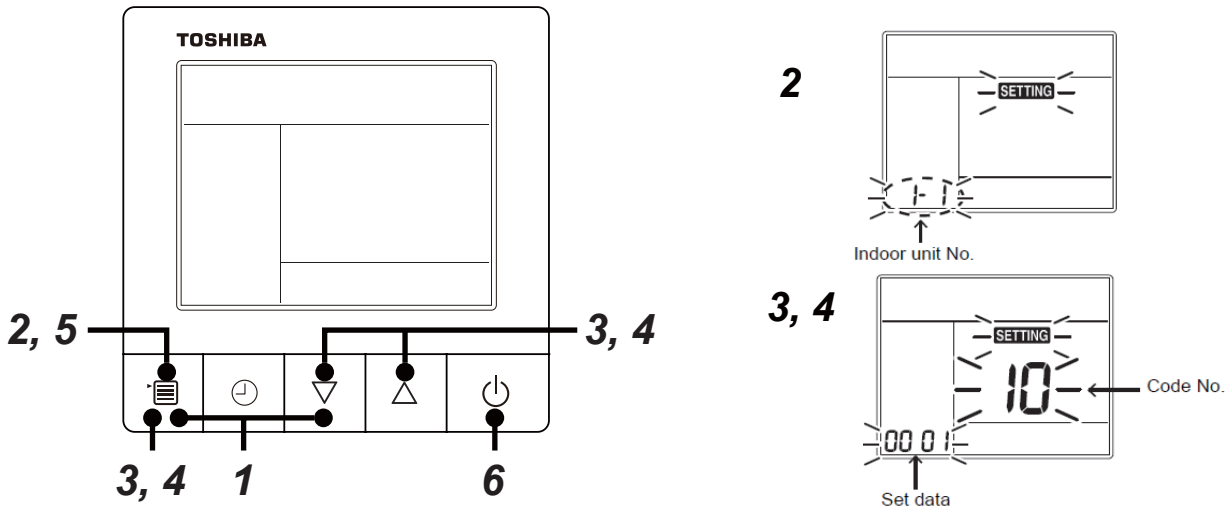

1 Push and hold the [menu + ▽] buttons at same time for more than 10 seconds.

2 Push the [OFF timer] button to confirm the selected indoor unit.

3 Push the [menu] button until the CODE No. flashes. And using the [▽ or △] buttons, specify the CODE No.13.

4 Push the [menu] button until the SET DATA flashes. And using the [▽ or △] buttons, set an indoor unit address.

5 Push the [OFF timer] button to confirm the SET DATA.

6 When all the settings have been completed, push the [ON/OFF] button, return to normal mode.

▼ **To change all the indoor unit addresses using an arbitrary wired remote controller.**
(The method is available when the addresses have already been set automatically.)

(When communication wirings of 2 or more refrigerant lines are interconnected for central control)

NOTE

You can change the addresses of indoor units in each refrigerant line using an arbitrary wired remote controller.

* Enter the address check / change mode and change the addresses.

<RBC-AMT∗∗∗>

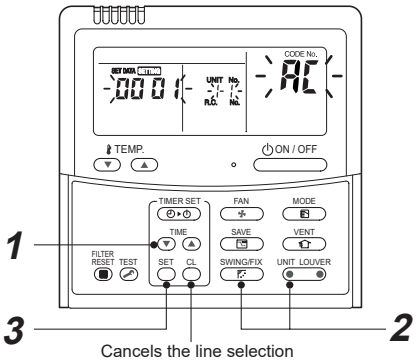

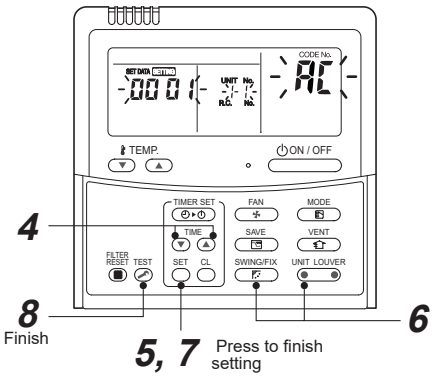

If no number appears on UNIT No., no outdoor unit exists on the line. Push button and select another line following step ***2***.

(Execute it while the units are stopped.)

1 **Push and hold the TIME ▼ / ▲ buttons at the same time for more than 4 seconds.**
At first, the line 1 and CODE No. AC (Address Change) are indicated on the LCD display.

2 **Push UNIT LOUVER button (left side of the button) and SWING/FIX buttons repeatedly to select a system address.**

3 **Push the SET button.**
- The address of one of the indoor units connected to the selected refrigerant line is indicated on the LCD display and the fan and louvers of the unit are activated.
  At first, the current indoor unit address is displayed in SET DATA.
  (No system address is indicated.)

4 **Push the TIME ▼ / ▲ buttons repeatedly to change the value of the indoor unit address in SET DATA.**
Change the value in SET DATA to that of a new address.

5 **Push the SET button to confirm the new address on SET DATA.**

6 **Push the UNIT LOUVER button (left side of the button) repeatedly to select another address to change.**
Each time you push the button, the indoor unit numbers in a refrigerant line are indicated one after another. Only the fan and louvers of the selected indoor unit are activated.
Repeat steps ***4*** to ***6*** to change the indoor unit addresses so as to make each of them unique.

7 **Push the SET button.**
(All the segments on the LCD display light up.)

8 **Push the TEST button to finish the procedure.**

<RBC-ASCU11-∗>

There is no such function in the remote controller.

◆ Check code clearing function

How to clear the check code using the wired remote controller

<RBC-AMT∗∗∗>

▼ Clearing a check code of the outdoor unit
Clear the currently detected outdoor unit for each refrigerant line to which the indoor unit controlled by the remote controller is connected. (The indoor unit check code is not cleared.)
Use the service monitoring function of the remote controller.

1. **Push and hold the CL , and TEST for 4 seconds or longer to enter the service monitoring mode.**
2. **Push the TEMP. button to set CODE No. to "FF".**
3. **The display in A of the following figure counts down as follows at 5-second intervals: "0005" → "0004" → "0003" → "0002" → "0001" → "0000".**
   The check code is cleared when "0000" appears.
   However, the display counts down from "0005" again.
4. **Push the TEST to return the display to normal.**

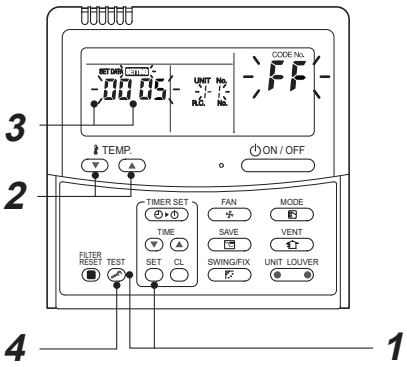

▼ Clearing a check code of the indoor unit
Push the ON / OFF button on the remote controller.
(Only the check code of the indoor unit controlled by the remote controller will be cleared.)

<RBC-ASCU11-∗>

▼ **Clearing a check code of the outdoor unit**
Clear the currently detected outdoor unit for each refrigerant line to which the indoor unit controlled by the remote controller is connected. (The indoor unit check code is not cleared.)
Use the service monitoring function of the remote controller.

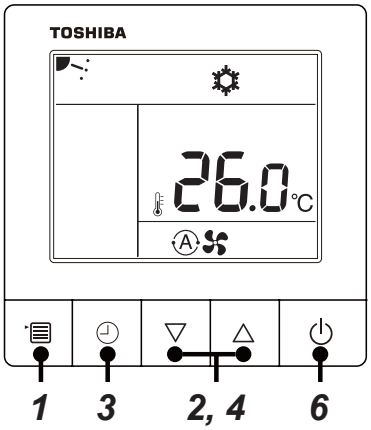

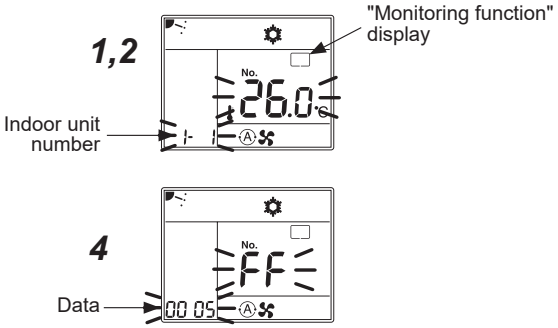

1 **Push the [menu] button for over 10 seconds.**

2 **Every pushing [▽ or △] buttons, the indoor unit numbers in group control are displayed successively.**

3 **Push the [OFF timer] button to confirm the selected indoor unit.**

4 **Every pushing [▽ or △] buttons to set CODE No. to "FF"**

5 **The display in A of the following figure counts down as follows at 5-second intervals:**
"0005" → "0004" → "0003" → "0002" → "000 1" → "0000"
The check code is cleared when "000" appears.
However, the display counts down from "005" again.

6 **After you have finished checking, push the [ON/OFF] button to return to normal mode.**

▼ **Clearing a check code of the indoor unit**
Push the ON / OFF button on the remote controller.
(Only the check code of the indoor unit controlled by the remote controller will be cleared.)

▼ Monitoring function of wired remote controller

<RBC-AMT∗∗∗>

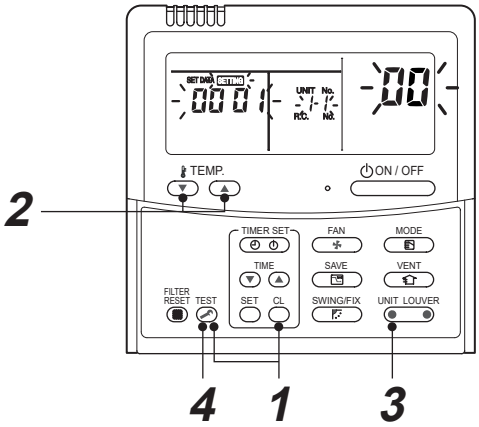

Content

Enter the service monitoring mode using the remote controller to check the sensor temperature or operation status of the remote controller, indoor unit, and outdoor unit.

1 **Push and hold the TEST, and CL for 4 seconds or longer to enter the service monitoring mode.**
The service monitor lights up. The CODE No. 00 appears at first.

2 **Push the TEMP. button to change to CODE No. of the item to monitor. Refer to the next page for CODE No.**

3 **Push the left part of the UNIT LOUVER button (left side of the button) to change to the item to monitor. Monitor the sensor temperature or operation status of the indoor unit and outdoor unit in the refrigerant line.**

4 **Push the TEST button to return the display to normal.**

<RBC-ASCU11-∗>

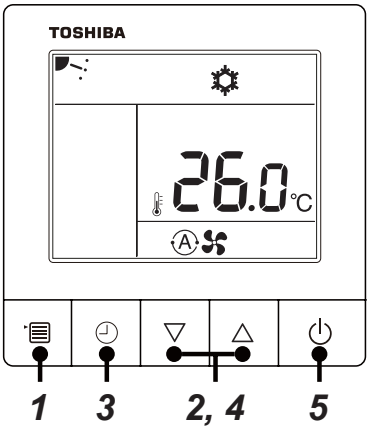

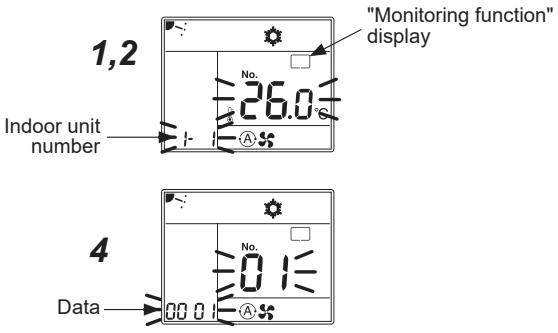

1 **Push the [menu] button for over 10 seconds. "Monitoring function" is displayed on a screen.**

2 **Every pushing [▽ or △] buttons, the indoor unit numbers in group control are displayed successively.**

3 **Push the [OFF timer] button to confirm the selected indoor unit.**

4 **Every pushing [▽ or △] buttons, CODE No. of the item is changed successively.**

5 **After you have finished checking, push the [ON/OFF] button, return to normal mode.**

◆ Indoor service monitor list

	Code No.	Data name	Display format	Unit	Remote controller display example
Indoor unit data *	00	Room temperature (Use to control)	×1	°C	
	01	Room temperature (Remote controller)	×1	°C	
	02	Indoor suction air temperature (TA)	×1	°C	
	03	Indoor coil temperature (TCJ)	×1	°C	
	04	Indoor coil temperature (TC2)	×1	°C	
	05	Indoor coil temperature (TC1)	×1	°C	
	06	Indoor discharge air temperature (TF) **	×1	°C	
	07	Indoor fan motor number of revolutions**	×1	rpm	[0600] = 600rpm
	08	Indoor PMV opening	×1/10	pls	[0150]=1500pls
	F3	Filter sign time	×1	h	[2500] = 2500h
	F9	Suction temperature of air to air heat exchanger (TSA) **	×1	℃	[0024] = 24°C
	FA	Outside air temperature (TOA) **	×1	℃	

* When the units are connected to a group, data of the header indoor unit only can be displayed.
** There is also a model which cannot be displayed.

• Refer to the service manual of an outdoor unit for "outdoor service monitor list".

9. TROUBLESHOOTING

9-1. Overview

(1) Before engaging in troubleshooting

(a) Applicable models
All Super Modular Multi System (SMMS-∗) models.
(Indoor units: MM∗-UP∗∗∗, Outdoor units: MMY-M∗P∗∗∗)

(b) Tools and measuring devices required
- Screwdrivers (Philips, flat head), spanners, long-nose pliers, nipper, pin to push reset switch, etc.
- Multimeter, thermometer, pressure gauge, etc.

(c) Things to check prior to troubleshooting (behaviors listed below are normal)

NO.	Behavior	Possible cause
1	A compressor would not start	• The air conditioner is being controlled by the 3-minute protective function. • It is in standby status though the room temperature has reached the setup temperature. • It is being operated in timer mode or fan mode. • It is being in initial communication.
2	An indoor fan would not start	• The air conditioner is being controlled by the cool air discharge preventive function in "heating"?
3	An outdoor fan would not start or would change speed for no reason	• The air conditioner is being operated in "cooling" under the low outside air temperature. • It is being operated in defrost operation.
4	An indoor fan would not stop	• The air conditioner is being controlled by function of residual heat elimination being performed as part of the air conditioner shutdown process after heating operation.
5	The air conditioner would not respond to a start/stop command from a remote controller	• The air conditioner is being operated under external or remote controller.

⚠ CAUTION

The cooling performance may be declining considerably when total operating capacity of cooling indoor units is less than 4 HP while ambient temperature is below.

(2) Troubleshooting procedure
When a problem occurs, proceed with troubleshooting in accordance with the procedure shown below.

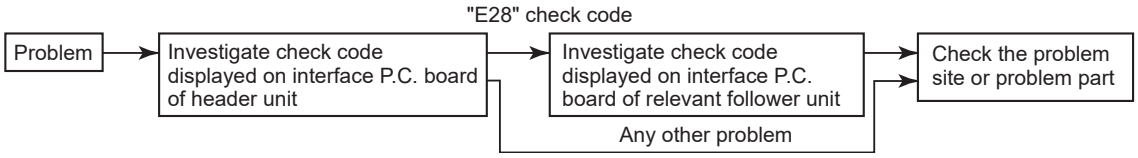

NOTE

Rather than a product trouble (see the List of Check Codes below), the problem could have been caused by a microprocessor malfunction attributable to a poor quality of the power source or an external noise. Check for possible noise sources, and shield the remote controller wiring and signal wires as necessary.

9-2. Troubleshooting method

The remote controllers (main remote controller and central control device) and the interface P.C. board of an outdoor unit are provided with an a 7-segment display (outdoor interface P.C. board) to display operational status. Using this self-diagnosis feature, the trouble site / trouble part may be identified in the event of a trouble by following the method described below.

The list below summarizes check codes detected by various devices. Analyze the check code according to where it is displayed and work out the nature of the trouble in consultation with the list.

- When investigating a trouble on the basis of a display provided on the indoor remote controller or central control device - See the “central control device or main remote controller display” section of the list.
- When investigating a trouble on the basis of a display provided on an outdoor unit - See the “Outdoor 7-segment display” section of the list.
- When investigating a trouble on the basis of a wireless remote controller-controlled indoor unit - See the “Indicator light block” section of the list.

List of check codes (indoor unit)

(Check code detected by indoor unit)

IPDU: Compressor / Fan inverter P.C. board
○: Lighting,◎: Flashing,●: Goes off
ALT.: Flashing is alternately when there are two flashing LED
SIM: Simultaneous flashing when there are two flashing LED

Check code			Display of receiving unit				Typical trouble on site	Description of check code
Remote controller display	Outdoor 7-segment display		Indicator light block					
		Sub-code	Operation	Timer	Ready	Flash		
E03	–	–	◎	●	●		Indoor-remote controller periodic communication check code	Communication from remote controller or network adaptor has been lost (so has central control communication).
E04	–	–	●	●	◎		Indoor-outdoor periodic communication check code	Signals are not being received from outdoor unit.
E08	E08	Duplicated indoor address	◎	●	●		Duplicated indoor address	Indoor unit detects address identical to its own.
E10	–	–	◎	●	●		Communication trouble between indoor unit MCU	Communication trouble between main MCU and the motor microcomputer MCU
E11	–	–	◎	●	●		Communication check code between Application control kit and indoor unit	Communication check code between Application control kit and indoor unit P.C. board
E18	–	–	◎	●	●		Check cod in periodic communication between indoor header and follower unit	Periodic communication between indoor header and follower units cannot be maintained.
F01	–	–	◎	◎	●	ALT	Indoor heat exchanger temperature sensor (TCJ) check code	Heat exchanger temperature sensor (TCJ) has been open / short-circuit.
F02	–	–	◎	◎	●	ALT	Indoor heat exchanger temperature sensor (TC2) check code	Heat exchanger temperature sensor (TC2) has been open / short-circuit.
F03	–	–	◎	◎	●	ALT	Indoor heat exchanger temperature sensor (TC1) check code	Heat exchanger temperature sensor (TC1) has been open / short-circuit.
F10	–	–	◎	◎	●	ALT	Ambient temperature sensor (TA) check code	Ambient temperature sensor (TA) has been open / short-circuit.
F11	–	–	◎	◎	●	ALT	Discharge temperature sensor (TF) check code	Discharge temperature sensor (TF) has been open / short-circuit.
F29	–	–	◎	◎	●	SIM	P.C. board or other indoor check code	Indoor EEPROM is abnormal (some other trouble may be detected).
F30	–	–	◎	◎	○	ALT	Occupancy sensor trouble	Occupancy sensor trouble has been detected.
L03	–	–	◎	●	◎	SIM	Duplicated indoor group header unit	There is more than one header unit in group.
L07	–	–	◎	●	◎	SIM	Connection of group control cable to a single indoor unit	There is at least one a single indoor unit to which group control cable is connected.
L08	L08	–	◎	●	◎	SIM	Indoor group address not set	Address setting has not been performed for one or more indoor units (also detected at outdoor unit end).
L09	–	–	◎	●	◎	SIM	Indoor capacity not set	Capacity setting has not been performed for indoor unit.
L20	–	–	◎	○	◎	SIM	Duplicated central control address	There is duplication in central control address setting.
L30	L30	Detected indoor unit No.	◎	○	◎	SIM	Indoor external check code input (interlock)	Unit shutdown has been caused by external check code input (CN80).
P01	–	–	●	◎	◎	ALT	Indoor AC fan check code	Indoor AC fan check code is detected (activation of fan motor thermal relay).
P10	P10	Detected indoor unit No.	●	◎	◎	ALT	Indoor overflow check code	Float switch has been activated.
P12	–	–	●	◎	◎	ALT	Indoor DC fan check code	• Indoor DC fan check code (e.g. overcurrent or lock-up) is detected.
P31	–	–	◎	●	◎	ALT	Other indoor unit check code	Follower unit cannot be operated due to header unit alarm (E03 /L03 / L07 / L08).

(Check code detected by remote controller)

Check code			Display of receiving unit					Typical trouble site	Description of trouble
Remote control	Outdoor 7-segment display		Indicator light block						
		Sub-code	Operation	Timer	Ready	Flash			
E01	–	–	◎	●	●			No master remote control, failure remote control communication (reception)	Signals cannot be received from indoor unit; master remote control has not been set (including two remote control).
E02	–	–	◎	●	●			Failure remote control communication (transmission)	Signals cannot be transmitted to indoor unit.
E09	–	–	◎	●	●			Duplicated master remote control	Both remote controls have been set as master remote control in two remote control (alarm and shutdown for header unit and continued operation for follower unit)

(Check code detected by central control device)

Check code			Display of receiving unit					Typical trouble site	Description of trouble
Central control	Outdoor 7-segment display		Indicator light block						
		Sub-code	Operation	Timer	Ready	Flash			
C05	–	–	No indication (when main remote control also in use)					Failure central control communication (transmission)	Central control device is unable to transmit signal due to duplication of central control device
C06	–	–						Failure central control communication (reception)	Central control device is unable to receive signal.
C12	–	–	–					Bracket alarm for general-purpose device control interface	Device connected to general-purpose device control interface is trouble.
P30 (L20)	–	–	(L20 is displayed.)					Communication Link	• Duplication addresses of indoor units in central control device • With the combination of air conditioning system, the indoor unit may detect the check code of L20

Note: The same trouble, e.g. a communication trouble, may result in the display of different check codes depending on the device that detects it. Moreover, check codes detected by the main remote controller / central control device do not necessarily have a direct impact on air conditioner operation.

Flow selector unit (FS unit) Relation

(Check code detected by indoor unit)

Check code			Display of receiving unit					Typical trouble site	Description of trouble
Main remote control	Outdoor 7-segment display		Indicator light block						
		Sub-code	Operation	Timer	Ready	Flash			
E17	–	–	◎	●	●			Communication trouble between indoor unit (s) and FS unit (s)	There is no communication from FS unit(s)
J03	–	–	●	◎	◎			Duplicated FS units	More than one FS units have been set up in one refrigerant line.
J10	–	–	●	◎	◎			FS unit overflow trouble	FS unit has been shutdown in one refrigerant line due to detection of overflow
J11	–	–	●	◎	◎			FS unit temperature sensor (TCS) trouble	FS unit temperature sensor (TCS) has been open/short-circuited.
L12	L12	–	◎	○	◎			FS unit(s) system trouble	FS unit(s) outside the application setting

List of Check Codes (Outdoor Unit)

(Check code detected by outdoor interface - typical examples)

If "HELLO" is displayed on the oudoor 7-segment for 1 minute or more, turn off the power supply once and then turn on the power supply again after passage of 30 seconds or more. When the same symptom appears, it is considered there is a possibility of I/F board trouble.

○ : Lighting, ◎ : Flashing, ● : Goes off
ALT.: Flashing is alternately when there are two flashing LED
SIM: Simultaneous flashing when there are two flashing LED

Check code			Display of receiving unit				Typical problem site	Description of problem
Outdoor 7-segment display		Central control or main remote controller display	Indicator light block					
	Sub-code		Operation ⏻	Timer ◷	Ready ☼	Flash		
E06	Number of indoor units from which signal is received normally	E06	●	●	◎		Signal lack of indoor unit	Indoor unit initially communicating normally fails to return signal (reduction in number of indoor units connected).
E07	–	(E04)	●	●	◎		Indoor-outdoor communication circuit trouble	Signal cannot be transmitted to indoor units (→ indoor units left without communication from outdoor unit).
E08	Duplicated indoor address	(E08)	◎	●	●		Duplicated indoor address	More than one indoor unit are assigned same address (also detected at indoor unit end).
E12	01: Indoor-outdoor communication 02: Outdoor-outdoor communication	E12	◎	●	●		Automatic address starting trouble	• Indoor automatic address setting is started while automatic address setting for equipment in other refrigerant line is in progress. • Outdoor automatic address setting is started while automatic address setting for indoor units is in progress.
E15	–	E15	●	●	◎		Indoor unit not found during automatic address setting	Indoor unit fails to communicate while automatic address setting for indoor units is in progress.
E16	00: Capacity over 01: Number of units connected	E16	●	●	◎		Too many indoor units connected/capacity over	Combined capacity of indoor units is too large. The maximum combined of indoor units shown in the specification table.
E19	00: No header unit 02: Two or more header units	E19	●	●	◎		Trouble in number of outdoor header units	There is no or more than one outdoor header unit in one refrigerant line.
E20	01: Connection of outdoor unit from other refrigerant line 02: Connection of indoor unit from other refrigerant line	E20	●	●	◎		Connection to other refrigerant line found during automatic address setting	Indoor unit from other refrigerant line is detected while indoor automatic address setting is in progress.
E23	–	E23	●	●	◎		Outdoor-outdoor communication transmission trouble	Signal cannot be transmitted to other outdoor units.
E25	–	E25	●	●	◎		Duplicated follower outdoor address	There is duplication in outdoor addresses set manually.
E26	Address of outdoor unit from which signal is not received normally	E26	●	●	◎		Signal lack of outdoor unit	Follower outdoor unit initially communicating normally fails to do so (reduction in number of follower outdoor units connected).
E28	Detected outdoor unit No.	E28	●	●	◎		Outdoor follower unit trouble	Outdoor header unit detects trouble relating to follower outdoor unit (detail displayed on follower outdoor unit).
E31	P.C.board (Compressor 1, 2; Fan Motor 1, 2) 01: O ; 02: O ; 03: O O ; 08: O ; 09: O O ; 0A: O O ; 0B: O O O ; 10: O P.C.board (Compressor 1, 2; Fan Motor 1, 2) 11: O O ; 12: O O ; 13: O O O ; 18: O ; 19: O O ; 1A: O O ; 1B: O O O Circle (O): Trouble P.C. board 80 : Communication trouble between MCU and Sub MCU	E31	●	●	◎		P.C. board communication trouble Sub MCU communication trouble	There is no communication between P.C. boards in inverter box.
F04	–	F04	◎	◎	○	ALT	Outdoor discharge temperature sensor (TD1) trouble	Outdoor discharge temperature sensor (TD1) has been open/short-circuited.
F05	–	F05	◎	◎	○	ALT	Outdoor discharge temperature sensor (TD2) trouble	Outdoor discharge temperature sensor (TD2) has been open/short-circuited.
F06	01: TE1 sensor 02: TE2 sensor 03: TE3 sensor	F06	◎	◎	○	ALT	Outdoor heat exchanger liquid side temperature sensor (TE1, TE2, TE3) trouble	Outdoor heat exchanger liquid side temperature sensors (TE1, TE2, TE3) have been open/short-circuited.
F07	01: TL1 sensor 02: TL2 sensor 03: TL3 sensor	F07	◎	◎	○	ALT	Outdoor liquid temperature sensor (TL1,TL2,TL3) trouble	Outdoor liquid temperature sensor (TL1,TL2,TL3) has been open/short-circuited.
F08	–	F08	◎	◎	○	ALT	Outdoor outside air temperature sensor (TO) trouble	Outdoor air temperature sensor (TO) has been open/short-circuited.
F09	01: TG1 sensor 02: TG2 sensor 03: TG3 sensor	F09	◎	◎	○	ALT	Outdoor heat exchanger gas side temperature sensor (TG1, TG2, TG3) trouble	Outdoor heat exchanger gas side temperature sensors (TG1, TG2, TG3) have been open/short-circuited.

Check code			Display of receiving unit				Typical problem site	Description of problem
Outdoor 7-segment display		Central control or main remote controller display	Indicator light block					
	Sub-code		Operation ⏻	Timer ◷	Ready ☼	Flash		
F12	01: TS1 sensor 03: TS3 sensor	F12	◎	◎	○	ALT	Outdoor suction temperature sensor (TS1,TS3) trouble	Outdoor suction temperature sensor (TS1,TS3) has been open/short-circuited.
F15	–	F15	◎	◎	○	ALT	Outdoor temperature sensor (TE1,TL1) wiring trouble	Wiring trouble in outdoor temperature sensors (TE1,TL1) has been detected.
F16	–	F16	◎	◎	○	ALT	Outdoor pressure sensor (Pd, Ps) wiring trouble	Wiring trouble in outdoor pressure sensors (Pd, Ps) has been detected.
F23	–	F23	◎	◎	○	ALT	Low pressure sensor (Ps) trouble	Output voltage of low pressure sensor (Ps) is zero.
F24	–	F24	◎	◎	○	ALT	High pressure sensor (Pd) trouble	Output voltage of high pressure sensor (Pd) is zero or provides abnormal readings when compressors have been turned off.
F31	–	F31	◎	◎	○	SIM	Outdoor EEPROM trouble	Outdoor EEPROM is failure (alarm and shutdown for header unit and continued operation for follower unit)
H05	–	H05	●	◎	●		Outdoor discharge temperature sensor (TD1) wiring trouble	Wiring/installation trouble or detachment of outdoor discharge temperature sensor (TD1) has been detected.
H06	–	H06	●	◎	●		Activation of low-pressure protection	Low pressure (Ps) sensor detects abnormally low operating pressure.
H07	–	H07	●	◎	●		Low oil level protection	Temperature sensor for oil level detection (TK1,TK2) detects abnormally low oil level.
H08	01: TK1 sensor trouble 02: TK2 sensor trouble	H08	●	◎	●		Trouble in temperature sensor for oil level detection (TK1,TK2)	Temperature sensor for oil level detection (TK1,TK2) has been open/short-circuited.
H15	–	H15	●	◎	●		Outdoor discharge temperature sensor (TD2) wiring trouble	Wiring/installation trouble or detachment of outdoor discharge temperature sensor (TD2) has been detected.
H16	01: TK1 oil circuit trouble 02: TK2 oil circuit trouble	H16	●	◎	●		Oil level detection circuit trouble	No temperature change is detected by temperature sensor for oil level detection (TK1,TK2) despite compressor having been started.
L04	–	L04	◎	○	◎	SIM	Duplicated outdoor refrigerant line address	Identical refrigerant line address has been assigned to outdoor units belonging to different refrigerant piping systems.
L06	Number of priority indoor units (check code L05 or L06 depending on individual unit)	L05	◎	●	◎	SIM	Duplicated priority indoor unit (as displayed on priority indoor unit)	More than one indoor unit have been set up as priority indoor unit.
		L06	◎	●	◎	SIM	Duplicated priority indoor unit (as displayed on indoor unit other than priority indoor unit)	More than one indoor unit have been set up as priority indoor unit.
L08	–	(L08)	◎	●	◎	SIM	Indoor group address not set	Address setting have not been performed for one or more indoor units (also detected at indoor end).
L10	–	L10	◎	○	◎	SIM	Outdoor capacity not set	Outdoor unit capacity has not been set (after P.C. board replacement).
L17	–	L17	◎	○	◎	SIM	Outdoor model incompatibility trouble	Old model outdoor unit has been connected.
L23	–	L23	◎	○	◎	SIM	SW setting mistake	
L28	–	L28	◎	○	◎	SIM	Too many outdoor units connected	More than five outdoor units have been connected.

Check code			Display of receiving unit				Typical problem site	Description of problem
Outdoor 7-segment display		Central control or main remote controller display	Indicator light block					
	Sub-code		Operation	Timer	Ready	Flash		
L29	<table><tr><th></th><th colspan="4">P.C.board</th><th></th><th colspan="4">P.C.board</th></tr><tr><th></th><th colspan="2">Compressor</th><th colspan="2">Fan Motor</th><th></th><th colspan="2">Compressor</th><th colspan="2">Fan Motor</th></tr><tr><th></th><th>1</th><th>2</th><th>1</th><th>2</th><th></th><th>1</th><th>2</th><th>1</th><th>2</th></tr><tr><td>01</td><td>O</td><td></td><td></td><td></td><td>11</td><td>O</td><td></td><td></td><td>O</td></tr><tr><td>02</td><td></td><td>O</td><td></td><td></td><td>12</td><td></td><td>O</td><td></td><td>O</td></tr><tr><td>03</td><td>O</td><td>O</td><td></td><td></td><td>13</td><td>O</td><td>O</td><td></td><td>O</td></tr><tr><td>08</td><td></td><td></td><td>O</td><td></td><td>18</td><td></td><td></td><td></td><td>O</td></tr><tr><td>09</td><td>O</td><td></td><td>O</td><td></td><td>19</td><td>O</td><td></td><td></td><td>O</td></tr><tr><td>0A</td><td></td><td>O</td><td>O</td><td></td><td>1A</td><td></td><td>O</td><td></td><td>O</td></tr><tr><td>0B</td><td>O</td><td>O</td><td>O</td><td></td><td>1B</td><td>O</td><td>O</td><td></td><td>O</td></tr><tr><td>10</td><td></td><td></td><td></td><td>O</td><td></td><td></td><td></td><td></td><td></td></tr></table>Circle (O): Trouble P.C. board	L29	◎	○	◎	SIM	Trouble in number of P.C. boards	There are insufficient number of P.C. board in inverter box.
L30	Detected indoor unit No.	(L30)	◎	○	◎	SIM	Indoor external trouble input (interlock)	Indoor unit has been shut down for external trouble input in one refrigerant line (detected by indoor unit).
P03	–	P03	◎	●	◎	ALT	Outdoor discharge (TD1) temperature trouble	Outdoor discharge temperature sensor (TD1) has detected abnormally high temperature.
P05	00: Power detection trouble 01: Open phase 02: Power supply miswiring	P05	◎	●	◎	ALT	Power detection trouble /Open phase detection /Power supply miswiring detection	Open phase is detected when power is turned on. Inverter DC voltage is too high (overvoltage) or too low (undervoltage).
P07	1 : Compressor 1 heat sink trouble 2 : Compressor 2 heat sink trouble	P07	◎	●	◎	ALT	Heat sink overheating trouble	Temperature sensor built into IPM (TH) detects overheating.
	04: Heat sink dew condensation						Heat sink dew condensation trouble	Outdoor liquid temperature sensor (TL2) has detected abnormally low temperature.
P10	Indoor unit No. detected	(P10)	●	◎	◎	ALT	Indoor unit overflow	Indoor unit has been shutdown in one refrigerant line due to detection of overflow (detected by indoor unit).
P11	–	P11	●	◎	◎	ALT	Outdoor heat exchanger freeze trouble	Remaining frost on outdoor heat exchanger has been detected repeatedly.
P13	–	P13	●	◎	◎	ALT	Outdoor liquid backflow detection trouble	State of refrigerant cycle circuit indicates liquid backflow operation.
P15	01: TS condition 02: TD condition	P15	◎	●	◎	ALT	Gas leak detection	Outdoor suction temperature sensor (TS1) detects sustained and repeated high temperatures that exceed standard value.
P17	–	P17	◎	●	◎	ALT	Outdoor discharge (TD2) temperature trouble	Outdoor discharge temperature sensor (TD2) detects abnormally high temperature.
P19	Outdoor unit No. detected	P19	◎	●	◎	ALT	4-way valve reversing trouble	Abnormality in refrigerating cycle is detected during heating operation.
P20	–	P20	◎	●	◎	ALT	Activation of high-pressure protection	High pressure (Pd) sensor detects high pressure that exceeds standard value.

MG-CTT: Magnet contactor

(Check code detected by Inverter of Compressor featuring in outdoor unit - typical examples)

Check code			Display of receiving unit				Typical problem site	Description of proplem
Outdoor 7-segment display		Central control or main remote controller display	Indicator light block					
	Sub-code		Operation	Timer	Ready	Flash		
F13	1∗: Compressor 1 2∗: Compressor 2	F13	◎	◎	○	ALT	Trouble in temperature sensor built into indoor IPM (TH)	Temperature sensor built into indoor IPM (TH) has been open/short-circuited.
H01	1∗: Compressor 1 2∗: Compressor 2	H01	●	◎	●		Compressor breakdown	Inverter current (Idc) detection circuit detects overcurrent.
H02	1∗: Compressor 1 2∗: Compressor 2	H02	●	◎	●		Compressor trouble (lockup)	Compressor lockup is detected
H03	1∗: Compressor 1 2∗: Compressor 2	H03	●	◎	●		Current detection circuit trouble	Abnormal current is detected while inverter compressor is turned off.
P04	01: Compressor 1 02: Compressor 2	P04	◎	●	◎	ALT	Activation of high-pressure SW	High-pressure SW is activated.
P05	01: Compressor 1 side 02: Compressor 2 side	P05	◎	●	◎	ALT	Compressor Vdc trouble	Inverter DC voltage is too high (overvoltage) or too low (undervoltage).
P07	01: Compressor 1 side 02: Compressor 2 side	P07	◎	●	◎	ALT	Heat sink overheat trouble	Temperature sensor built into IPM (TH) detects overheating.
P11	–	P11	●	◎	◎	ALT	Outdoor heat exchanger freeze trouble	Remaining frost on outdoor heat exchanger has been detected repeatedly.
P22	1∗: Fan P.C. board 1 2∗: Fan P.C. board 2	P22	◎	●	◎	ALT	Outdoor fan P.C. board trouble	Outdoor fan P.C. board detects trouble.
P26	1∗: Compressor 1 2∗: Compressor 2	P26	◎	●	◎	ALT	Activation of IPM, compressor short-circuit protection	Short-circuit protection for compressor motor driver circuit components is activated (momentary overcurrent).
P29	1∗: Compressor 1 2∗: Compressor 2	P29	◎	●	◎	ALT	Compressor position detection circuit trouble	Compressor motor position detection trouble is detected.

Note: The above check codes are examples only, and different check codes may be displayed depending on the outdoor unit configuration

9-3. Troubleshooting based on information displayed on remote controller

<RBC-AMT∗∗∗>

(1) Checking and testing

When a trouble occurs to an air conditioner, a check code and indoor unit No. are displayed on the display window of the remote controller.
Check codes are only displayed while the air conditioner is in operation.
If the display has already disappeared, access check code history by following the procedure described below.

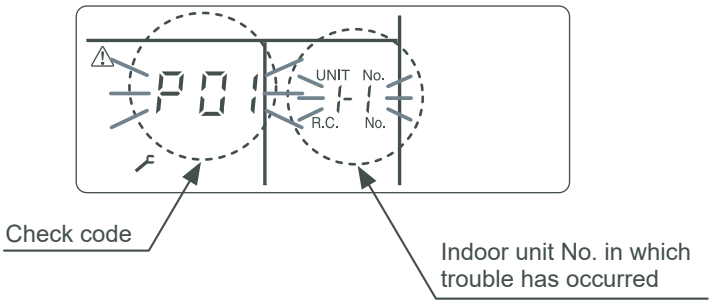

(2) Trouble history

The trouble history access procedure is described below (up to four check codes stored in memory).
Check code history can be accessed regardless of whether the air conditioner is in operation or shut down.

<Procedure> To be performed when system at rest

1 Invoke the SERVICE CHECK mode by pressing the TEST + SET buttons simultaneously and holding for at least 4 seconds.

The letters "SERVICE CHECK" light up, and the check code "01" is displayed, indicating the trouble history. This is accompanied by the indoor unit No. to which the trouble history is related and a check code.

2 To check other trouble history items, press the TEMP. button to select another check code.

Check code "01" (latest) → Check code "04" (oldest)
Note: Trouble history contains four items.

3 When the TEST button is pushed, normal display is restored.

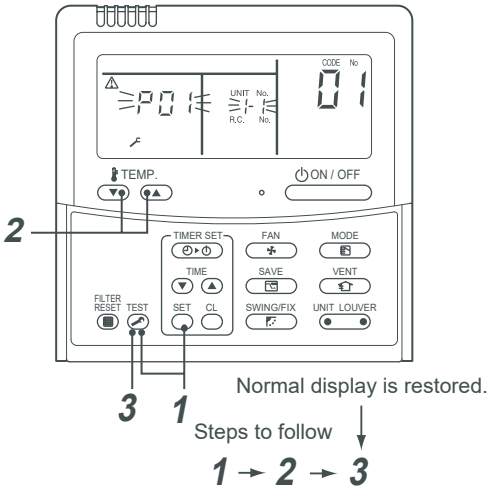

⚠ CAUTION

Do not push the CL button as it would erase the whole trouble history of the indoor unit.

<RBC-ASCU11-∗>

(1) Confirmation and check

If a problem occurs with the air conditioner, the OFF timer indicator alternately shows the check code and the indoor Unit No. in which the problem occurred.

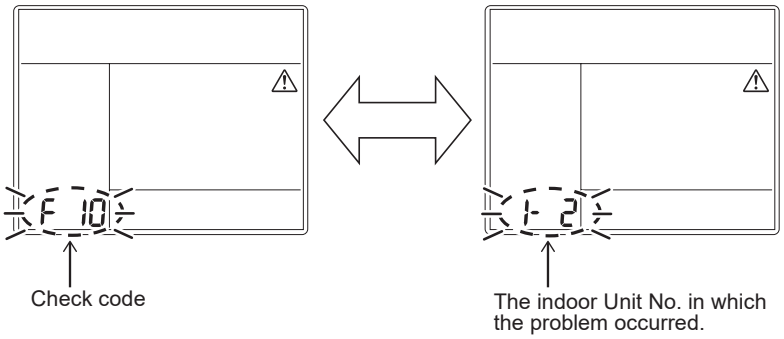

(2) Troubleshooting history and confirmation

You can check the troubleshooting history with the following procedure if a problem occurs with the air conditioner.
(The troubleshooting history records up to 4 incidents.)

You can check it during operation or when operation is stopped.

- If you check the troubleshooting history during OFF timer operation, the OFF timer will be canceled.

Procedure	Description of operation
1	Push the OFF timer button for over 10 seconds and the indicators appear as an image indicating the troubleshooting history mode has been entered. If [Service check] is displayed, the mode enters in the troubleshooting history mode. • [01: Order of troubleshooting history] appears in the temperature indicator. • The OFF timer indicator alternately shows the [check code] and the [indoor Unit No.] in which the problem occurred. 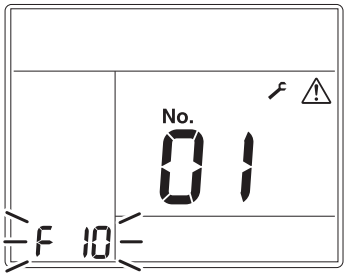
2	Each time the setting button is pushed, the recorded troubleshooting history is displayed in sequence. The troubleshooting history appears in order from [01] (newest) to [04] (oldest). **⚠ CAUTION** In the troubleshooting history mode, DO NOT push the Menu button for over 10 seconds, doing so deletes the entire troubleshooting history of the indoor unit. 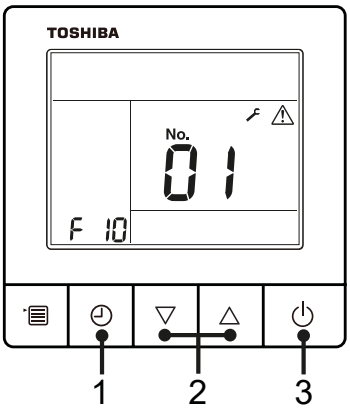
3	After you have finished checking, push the ON/OFF button to return to the regular mode. • If the air conditioner is operating, it remains operated even after the ON/OFF button has been pushed. To stop its operation, push the ON/OFF button again.

How to read displayed information

<7-segment display symbols>

<Corresponding alphanumerical letters>

0 1 2 3 4 5 6 7 8 9 A b C d E F H J L P

Using indoor unit indicators (receiving unit light block) (wireless type)

To identify the check code, check the 7-segment display on the header unit. To check for check codes not displayed on the 7-segment display, consult the “List of Check Codes (Indoor Unit)” in “9-2. Troubleshooting method”.

●: Goes off ○: Lighting ☼: Blinking (0.5 seconds)

Light block	Check code	Cause of trouble		
Operation ● Timer ● Ready ● All lights out	–	Power turned off or trouble in wiring between receiving and indoor units		
Operation ☼ Timer ● Ready ● Blinking	E01	Trouble reception	Receiving unit	Trouble or poor contact in wiring between receiving unit and indoor units
	E02	Trouble transmission		
	E03	Loss of communication		
	E08	Duplicated indoor unit No. (address)		Setting trouble
	E09	Duplicated master remote controller		
	E10	Communication trouble between indoor unit MCU		
	E11	Communication trouble between Application control kit and indoor unit P.C. board		
	E12	Automatic address starting trouble		
	E18	Trouble or poor contact in wiring between indoor units, indoor power turned off		
Operation ● Timer ● Ready ☼ Blinking	E04	Trouble or poor contact in wiring between indoor and outdoor units (loss of indoor-outdoor communication)		
	E06	Trouble reception in indoor-outdoor communication (dropping out of indoor unit)		
	E07	Trouble transmission in indoor-outdoor communication		
	E15	Indoor unit not found during automatic address setting		
	E16	Too many indoor units connected / overloading		
	E19	Trouble in number of outdoor header units		
	E20	Detection of refrigerant piping communication trouble during automatic address setting		
	E23	Trouble transmission in outdoor-outdoor communication		
	E25	Duplicated follower outdoor address		
	E26	Trouble reception in outdoor-outdoor communication, dropping out of outdoor unit		
	E28	Outdoor follower unit trouble		
	E31	P.C. board communication trouble		
Operation ● Timer ☼ Ready ☼ Alternate blinking	P01	Indoor AC fan trouble		
	P10	Indoor overflow trouble		
	P11	Outdoor heat exchanger freezing trouble		
	P12	Indoor DC fan trouble		
	P13	Outdoor liquid backflow detection trouble		
Operation ☼ Timer ● Ready ☼ Alternate blinking	P03	Outdoor discharge (TD1) temperature trouble		
	P04	Activation of outdoor high-pressure SW		
	P05	Open phase / power failure Inverter DC voltage (Vdc) trouble MG-CTT trouble		
	P07	Outdoor heat sink overheating trouble - Poor cooling of electrical component (IGBT) of outdoor unit		
	P15	Gas leak detection - insufficient refrigerant charging		
	P17	Outdoor discharge (TD2) temperature trouble		
	P18	Outdoor discharge (TD3) temperature trouble		
	P19	Outdoor 4-way valve reversing trouble		
	P20	Activation of high-pressure protection		
	P22	Outdoor fan P.C. board trouble		
	P26	Outdoor IPM, Compressor short-circuit trouble		
	P29	Compressor position detection circuit trouble		
	P31	Shutdown of other indoor unit in group due to trouble (group follower unit trouble)		

MG-CTT: Magnet contactor

Light block	Check code	Cause of trouble	
Operation Timer Ready Alternate blinking	F01	Heat exchanger temperature sensor (TCJ) trouble	Indoor unit temperature sensor trouble
	F02	Heat exchanger temperature sensor (TC2) trouble	
	F03	Heat exchanger temperature sensor (TC1) trouble	
	F10	Ambient temperature sensor (TA) trouble	
	F11	Discharge temperature sensor (TF) trouble	
Operation Timer Ready Alternate blinking	F04	Discharge temperature sensor (TD1) trouble Discharge	Outdoor unit temperature sensor trouble
	F05	temperature sensor (TD2) trouble	
	F06	Heat exchanger temperature sensor (TE1, TE2) trouble	
	F07	Liquid temperature sensor (TL) trouble	
	F08	Outside air temperature sensor (TO) trouble	
	F09	TG1,TG2 or TG3 sensor trouble	
	F12	Suction temperature sensor (TS1) trouble	
	F13	Heat sink sensor (TH) trouble	
	F15	Wiring trouble in heat exchanger sensor (TE1) and liquid temperature sensor (TL) Outdoor unit temperature sensor wiring / installation trouble	
	F16	Wiring trouble in outdoor high pressure sensor (Pd) and low pressure sensor (Ps) Outdoor pressure sensor wiring trouble	
	F22	Outdoor discharge temperature sensor (TD3) trouble	Outdoor unit pressure sensor trouble
	F23	Low pressure sensor (Ps) trouble	
	F24	High pressure sensor (Pd) trouble	
	F30	Occupancy sensor trouble	
	F31	Indoor unit EEPROM trouble	
Operation Timer Ready Synchronized blinking	F29	Failure in indoor EEPROM	
Operation Timer Ready Blinking	H01	Compressor breakdown	Outdoor unit compressor related trouble
	H02	Compressor lockup	
	H03	Current detection circuit trouble	
	H04	Comp. 1 case thermostat operation	
	H05	Wiring / installation trouble or detachment of outdoor discharge temperature sensor (TD1)	
	H06	Abnormal drop in low-pressure sensor (Ps) reading	Protective shutdown of outdoor unit
	H07	Abnormal drop in oil level	
	H08	Trouble in temperature sensor for oil level detection circuit (TK1, TK2, TK3, TK4 or TK5)	
	F14	Comp. 2 case thermostat operation	
	H15	Wiring / installation trouble or detachment of outdoor discharge temperature sensor (TD2)	
	H16	Oil level detection circuit trouble - Trouble in outdoor unit TK1, TK2, TK3, TK4 or TK5 circuit	
	H25	Wiring / installation trouble or detachment of outdoor discharge temperature sensor (TD3)	
Operation Timer Ready Synchronized blinking	L02	Model mismatched of indoor and outdoor unit	
	L03	Duplicated indoor group header unit	
	L05	Duplicated priority indoor unit (as displayed on priority indoor unit)	
	L06	Duplicated priority indoor unit (as displayed on indoor unit other than priority indoor unit)	
	L07	Connection of group control cable to a single indoor unit	
	L08	Indoor group address not set	
	L09	Indoor capacity not set	
Operation Timer Ready Synchronized blinking	L04	Duplicated outdoor refrigerant line address	
	L10	Outdoor capacity not set	
	L17	Outdoor model incompatibility trouble	
	L18	Flow selector units trouble	
	L20	Duplicated central control address	
	L28	Too many outdoor units connected	
	L29	Trouble in number of P.C. boards	
	L30	Indoor external interlock trouble (External abnormal input)	

Light block	Check code	Cause of trouble
Operation Timer Ready Synchronized blinking	F30	Occupancy sensor trouble
	F31	Outdoor EEPROM trouble

Other (indications not involving check code)

Light block	Check code	Cause of trouble
Operation Timer Ready Synchronized blinking	–	Test run in progress
Operation Timer Ready Alternate blinking	–	Setting incompatibility (automatic cooling / heating setting for model incapable of it and heating setting for cooling-only model)

Flow selector unit (FS unit) Relation

Light block	Check code	Cause of trouble
Operation Timer Ready Blinking	E17	Communication trouble between indoor unit(s) and FS unit(s)
Operation Timer Ready Synchronized blinking	L12	FS unit(s) system trouble
	L24	FS unit(s) setting trouble
Operation Timer Ready Blinking Blinking	J03	Duplicated FS units
	J10	FS unit overflow trouble
	J11	FS unit temperature sensor(TCS) trouble

9-4. Check Codes Displayed on Remote Controller and SMMS series Outdoor Unit (7-Segment Display on I/F Board) and Locations to Be Checked

For other types of outdoor units, refer to their own service manuals.

Check code			Location of detection	Description	System status	Check code detection condition(s)	Check items (locations)
Main remote controller	Outdoor 7-segment display						
	Check code	Sub-code					
E01	—	—	Remote controller	Indoor-remote controller communication trouble (detected at remote controller end)	Stop of corresponding unit	Communication between indoor P.C. board and remote controller is disrupted.	• Check remote controller inter-unit tie cable (A/B). • Check for broken wire or connector bad contact. • Check indoor power supply. • Check for failure in indoor P.C. board. • Check remote controller address settings (when two remote controllers are in use). • Check remote controller P.C. board.
E02	—	—	Remote controller	Remote controller transmission trouble	Stop of corresponding unit	Signal cannot be transmitted from remote controller to indoor unit.	• Check internal transmission circuit of remote controller. --- Replace remote controller as necessary.
E04	—	—	Indoor unit	Indoor-outdoor communication circuit trouble (detected at indoor end)	Stop of corresponding unit	Indoor unit is not receiving signal from outdoor unit.	• Check order in which power was turned on for indoor and outdoor units. • Check indoor address setting. • Check indoor-outdoor tie cable. • Check outdoor terminator resistor setting (SW100, Bit 2).
E04	E06	No. of indoor units from which signal is received normally	I/F	Dropping out of indoor unit	All stop	**Condition 1** All indoor unit initially communicating normally fails to return signal for specified length of time. **Condition 2** Outdoor I / F board SW103, Bit4 : OFF (Factory default)	• Check power supply to indoor unit. (Is power turned on?) • Check connection of indoor-outdoor communication cable. • Check connection of communication connectors on indoor P.C. board. • Check connection of communication connectors on outdoor P.C. board. • Check for failure in indoor P.C. board. • Check for failure in outdoor P.C. board (I/F).
	—	—	Indoor unit	Indoor-outdoor communication circuit trouble	Only specified indoor units stop	**Condition 1** Indoor unit initially communicating normally fails to return signal for specified length of time.	• Check power supply to indoor unit. (Is power turned on?) • Check indoor-outdoor power-on sequence. • Check indoor address setting • Check wiring of Indoor-outdoor communication wires • Check outdoor terminator resistor setting (SW100, Bit 2).

Check code			Location of detection	Description	System status	Check code detection condition(s)	Check items (locations)
Main remote controller	Outdoor 7-segment display						
	Check code	Sub-code					
E04/E06	E06	No. of indoor units from which signal is received normally	Indoor unit	Indoor-outdoor communication circuit trouble (E04)	All stop	**Condition 1** One indoor unit or more initially communicating normally fails to return signal for specified length of time. **Condition 2** Outdoor I / F board SW103, Bit4 : ON (To switch the check code detection condition.) SW103 ON 1 2 3 4 Display on main remote controller. Indoor units unavailable for indoor / outdoor communication. :E04 Indoor units available for indoor / outdoor communication. : E06	• Check power supply to indoor unit. (Is power turned on?) • Check indoor-outdoor power-on sequence. • Check indoor address setting • Check wiring of Indoor-outdoor communication wires • Check outdoor terminator resistor setting (SW100, Bit 2).
			I/F	Dropping out of indoor unit (E06)			• Check power supply to indoor unit. (Is power turned on?) • Check connection of indoor-outdoor communication cable. • Check connection of communication connectors on indoor P.C. board. • Check connection of communication connectors on outdoor P.C. board. • Check for failure in indoor P.C. board. • Check for failure in outdoor P.C. board (I/F).
—	E07	—	I/F	Indoor-outdoor communication circuit trouble (detected at outdoor end)	All stop	Signal cannot be transmitted from outdoor to indoor units for 30 seconds continuously.	• Check outdoor terminator resistor setting (SW100, Bit 2). • Check connection of indoor-outdoor communication circuit.
E08	E08	Duplicated indoor address	Indoor unit I/F	Duplicated indoor address	All stop	More than one indoor unit are assigned same address.	• Check indoor addresses. • Check for any change made to remote controller connection (group/ individual) since indoor address setting.
E09	—	—	Remote controller	Duplicated master remote controller	Stop of corresponding unit	In two remote controller configuration (including wireless), both controllers are set up as master. (Header indoor unit is shut down with alarm, while follower indoor units continue operating.)	• Check remote controller settings. • Check remote controller P.C. boards.
E10	—	—	Indoor unit	Indoor inter-MCU communication trouble	Stop of corresponding unit	Communication cannot be established/maintained upon turning on of power or during communication.	• Check for failure in indoor P.C. board
E12	E12	01: Indoor-outdoor communication 02: Outdoor-outdoor communication	I/F	Automatic address starting trouble	All stop	• Indoor automatic address setting is started while automatic address setting for equipment in other refrigerant line is in progress. • Outdoor automatic address setting is started while automatic address setting for indoor units is in progress.	• Perform automatic address setting again after disconnecting communication cable to that refrigerant line.
E15	E15	—	I/F	Indoor unit not found during automatic address setting	All stop	Indoor unit cannot be detected after indoor automatic address setting is started.	• Check connection of indoor-outdoor communication line. • Check for trouble in indoor power supply system. • Check for noise from other devices. • Check for power failure. • Check for failure in indoor P.C. board.

Check code			Location of detection	Description	System status	Check code detection condition(s)	Check items (locations)
Main remote controller	Outdoor 7-segment display						
	Check code	Sub-code					
E16	E16	00: Capacity over 01-: No. of units connected	I/F	Too many indoor units connected	All stop	• Combined capacity of indoor units is too large. **Note:** **If this code comes up after backup setting for outdoor unit failure is performed, perform "No capacity over detected" setting.** <"No capacity over detected" setting method> Turn on SW103 / Bit 3 on I/F P.C. board of outdoor header unit. For Cooling Only model, this check code is not displayed even if it exceeds the combined capacity of indoor units. • More than 128 indoor units are connected.	• Check capacities of indoor units connected. • Check combined HP capacities of indoor units. • Check HP capacity settings of outdoor units. • Check No. of indoor units connected. • Check for failure in outdoor P.C. board (I/F).
E18	—	—	Indoor unit	Trouble in communication between indoor header and follower units	Stop of corresponding unit	Periodic communication between indoor header and follower units cannot be maintained.	• Check remote controller wiring. • Check indoor power supply wiring. • Check P.C. boards of indoor units.
E19	E19	00: No header unit 02: Two or more header units	I/F	Trouble in number of outdoor header units	All stop	• There are more than one outdoor header units in one line. • There is no outdoor header unit in one line.	Outdoor header unit is outdoor unit to which indoor-outdoor tie cable (U1,U2) is connected. • Check connection of indoor-outdoor communication line. • Check for failure in outdoor P.C. board (I/F).
E20	E20	01: Connection of outdoor unit from other line 02: Connection of indoor unit from other line	I/F	Connection to other line found during automatic address setting	All stop	Equipment from other line is found to have been connected when indoor automatic address setting is in progress.	Disconnect inter-line tie cable in accordance with automatic address setting method explained in "Address setting" section.
E23	E23	—	I/F	Outdooroutdoor communication transmission trouble	All stop	Signal cannot be transmitted to other outdoor units for at least 30 seconds continuously.	• Check power supply to outdoor units. (Is power turned on?) • Check connection of tie cables between outdoor units for bad contact or broken wire. • Check communication connectors on outdoor P.C. boards. • Check for failure in outdoor P.C. board (I/F). • Check termination resistance setting for communication between outdoor units.
E25	E25	—	I/F	Duplicated follower outdoor address	All stop	There is duplication in outdoor addresses set manually.	**Note:** **Do not set outdoor addresses manually.**
E26	E26	Address of outdoor unit from which signal is not received normally	I/F	Signal lack of outdoor unit	All stop	Outdoor unit initially communicating normally fails to return signal for specified length of time.	• Backup setting is being used for outdoor units. • Check power supply to outdoor unit. (Is power turned on?) • Check connection of tie cables between outdoor units for bad contact or broken wire. • Check communication connectors on outdoor P.C. boards. • Check for failure in outdoor P.C. board (I/F).

<table>
<tr><th colspan="3">Check code</th><th rowspan="3">Location of detection</th><th rowspan="3">Description</th><th rowspan="3">System status</th><th rowspan="3">Check code detection condition(s)</th><th rowspan="3">Check items (locations)</th></tr>
<tr><th rowspan="2">Main remote controller</th><th colspan="2">Outdoor 7-segment display</th></tr>
<tr><th>Check code</th><th>Sub-code</th></tr>
<tr><td>E28</td><td>E28</td><td>Detected outdoor unit No.</td><td>I/F</td><td>Outdoor follower unit trouble</td><td>All stop</td><td>Outdoor header unit receives trouble code from outdoor follower unit.</td><td>• Check check code displayed on outdoor follower unit.
<Convenient functions>
If SW04 is pressed and held for at least 1 second while [E28] is displayed on the 7-segment display of outdoor header unit, the fan of the outdoor unit that has been shut down due to an trouble comes on.
If SW04 and SW05 are pressed simultaneously, the fans of normal outdoor units come on.
To stop the fan or fans, press SW05 on its own.</td></tr>
<tr><td rowspan="2">E31</td><td rowspan="2">E31</td><td><table><tr><th></th><th colspan="4">P.C.board</th></tr><tr><th></th><th colspan="2">Compressor</th><th colspan="2">Fan Motor</th></tr><tr><th></th><th>1</th><th>2</th><th>1</th><th>2</th></tr><tr><td>01</td><td>O</td><td></td><td></td><td></td></tr><tr><td>02</td><td></td><td>O</td><td></td><td></td></tr><tr><td>03</td><td>O</td><td>O</td><td></td><td></td></tr><tr><td>08</td><td></td><td></td><td>O</td><td></td></tr><tr><td>09</td><td>O</td><td></td><td>O</td><td></td></tr><tr><td>0A</td><td></td><td>O</td><td>O</td><td></td></tr><tr><td>0B</td><td>O</td><td>O</td><td>O</td><td></td></tr><tr><td>10</td><td></td><td></td><td></td><td>O</td></tr><tr><td>11</td><td>O</td><td></td><td></td><td>O</td></tr><tr><td>12</td><td></td><td>O</td><td></td><td>O</td></tr><tr><td>13</td><td>O</td><td>O</td><td></td><td>O</td></tr><tr><td>18</td><td></td><td></td><td></td><td>O</td></tr><tr><td>19</td><td>O</td><td></td><td></td><td>O</td></tr><tr><td>1A</td><td></td><td>O</td><td></td><td>O</td></tr><tr><td>1B</td><td>O</td><td>O</td><td></td><td>O</td></tr></table>Circle (O): Trouble P.C. board</td><td>I/F</td><td>P.C. board communication trouble</td><td>All stop</td><td>Communication is disrupted between P.C. board in inverter box.</td><td>• Check wiring and connectors involved in communication between P.C. board I/F P.C. board for bad contact or broken wire.
• Check for failure in outdoor P.C. board (I/F, comp. P.C. board or Fan P.C. board).
• Check for external noise.</td></tr>
<tr><td>80</td><td></td><td>Communication trouble between MCU and Sub MCU</td><td>All stop</td><td>Communication between MCU and Sub MCU stopped.</td><td>• Operation of power supply reset (OFF for 60 seconds or more)
• Outdoor I/F PC board trouble check</td></tr>
<tr><td>F01</td><td>—</td><td>—</td><td>Indoor unit</td><td>Indoor TCJ sensor trouble</td><td>Stop of corresponding unit</td><td>Sensor resistance is infinity or zero (open/short circuit).</td><td>• Check connection of TCJ sensor connector and wiring.
• Check resistance characteristics of TCJ sensor.
• Check for failure in indoor P.C. board.</td></tr>
<tr><td>F02</td><td>—</td><td>—</td><td>Indoor unit</td><td>Indoor TC2 sensor trouble</td><td>Stop of corresponding unit</td><td>Sensor resistance is infinity or zero (open/short circuit).</td><td>• Check connection of TC2 sensor connector and wiring.
• Check resistance characteristics of TC2 sensor.
• Check for failure in indoor P.C. board.</td></tr>
<tr><td>F03</td><td>—</td><td>—</td><td>Indoor unit</td><td>Indoor TC1 sensor trouble</td><td>Stop of corresponding unit</td><td>Sensor resistance is infinity or zero (open/short circuit).</td><td>• Check connection of TC1 sensor connector and wiring.
• Check resistance characteristics of TC1 sensor.
• Check for failure in indoor P.C. board.</td></tr>
<tr><td>F04</td><td>F04</td><td>—</td><td>I/F</td><td>TD1 sensor trouble</td><td>All stop</td><td>Sensor resistance is infinity or zero (open/short circuit).</td><td>• Check connection of TD1 sensor connector.
• Check resistance characteristics of TD1 sensor.
• Check for failure in outdoor P.C. board (I/F).</td></tr>
</table>

Check code			Location of detection	Description	System status	Check code detection condition(s)	Check items (locations)
Main remote controller	Outdoor 7-segment display						
	Check code	Sub-code					
F05	F05	—	I/F	TD2 sensor trouble	All stop	Sensor resistance is infinity or zero (open/short circuit).	• Check connection of TD2 sensor connector. • Check resistance characteristics of TD2 sensor. • Check for failure in outdoor P.C. board (I/F).
F06	F06	01: TE1 sensor trouble 02: TE2 sensor trouble 03: TE3 sensor trouble	I/F	TE1/TE2/TE3 sensor trouble	All stop	Sensor resistance is infinity or zero (open/short circuit).	• Check connection of TE1/TE2/TE3 sensor connectors. • Check resistance characteristics of TE1/TE2/TE3 sensors. • Check for failure in outdoor P.C. board (I/F).
F07	F07	01: TL1 sensor trouble 02: TL2 sensor trouble 03: TL3 sensor trouble	I/F	TL1/TL2/TL3 sensor trouble	All stop	Sensor resistance is infinity or zero (open/short circuit).	• Check connection of TL1/TL2/TL3 sensor connector. • Check resistance characteristics of TL1/TL2/TL3 sensor. • Check for failure in outdoor P.C. board (I/F).
F08	F08	—	I/F	TO sensor trouble	All stop	Sensor resistance is infinity or zero (open/short circuit).	• Check connection of TO sensor connector. • Check resistance characteristics of TO sensor. • Check for failure in outdoor P.C. board (I/F).
F09	F09	01: TG1 sensor trouble 02: TG2 sensor trouble 03: TG3 sensor trouble	I/F	TG1/TG2/TG3 sensor trouble	All stop	Sensor resistance is infinity or zero (open/short circuit).	• Check connection of TG1/TG2/TG3 sensor connectors. • Check resistance characteristics of TG1/TG2/TG3 sensors. • Check for failure in outdoor P.C. board (I/F).
F10	—	—	Indoor unit	Indoor TA sensor trouble	Stop of corresponding unit	Sensor resistance is infinity or zero (open/short circuit).	• Check connection of TA sensor connector and wiring. • Check resistance characteristics of TA sensor. • Check for failure in indoor P.C. board.
F11	—	—	Indoor unit	Indoor TF sensor trouble	Stop of corresponding unit	Sensor resistance is infinity or zero (open/short circuit).	• Check connection of TF sensor connector and wiring. • Check resistance characteristics of TF sensor. • Check for failure in indoor P.C. board.
F12	F12	01: TS1 sensor trouble 03: TS3 sensor trouble	I/F	TS1/TS3 sensor trouble	All stop	Sensor resistance is infinity or zero (open/short circuit).	• Check connection of TS1/TS3 sensor connector • Check resistance characteristics of TS1/TS3 sensor. • Check for failure in indoor P.C. board.
F13	F13	1∗: Compressor 1 side 2∗: Compressor 2 side	Compressor P.C. board	TH sensor trouble	All stop	Sensor resistance is infinity or zero (open/short circuit).	• Failure in IPM built-in temperature sensor → Replace Compressor P.C. board.
F15	F15	—	I/F	Outdoor temperature sensor wiring trouble (TE1, TL1)	All stop	During compressor operation in HEAT mode, TL1 continuously provides temperature reading higher than indicated by TL1 by at least specified margin for 3 minutes or more.	• Check installation of TE1 and TL1 sensors. • Check resistance characteristics of TE1 and TL1 sensors. • Check for outdoor P.C. board (I/F) trouble

Check code			Location of detection	Description	System status	Check code detection condition(s)	Check items (locations)
Main remote controller	Outdoor 7-segment display						
	Check code	Sub-code					
F16	F16	—	I/F	Outdoor pressure sensor wiring trouble (Pd, Ps)	All stop	Readings of high-pressure Pd sensor and low-pressure Ps sensor are switched. Output voltages of both sensors are zero.	• Check connection of high-pressure Pd sensor connector. • Check connection of low-pressure Ps sensor connector. • Check for failure in pressure sensors Pd and Ps. • Check for trouble in outdoor P.C. board (I/F). • Check for compressor poor compression.
F23	F23	—	I/F	Ps sensor trouble	All stop	Output voltage of Ps sensor is zero.	• Check for connection trouble involving Ps sensor and Pd sensor connectors. • Check connection of Ps sensor connector. • Check for failure in Ps sensor. • Check for compressor poor compression. • Check for failure in 4-way valve. • Check for failure in outdoor P.C. board (I/F). • Check for failure in SV4 circuit.
F24	F24	—	I/F	Pd sensor trouble	All stop	Output voltage of Pd sensor is zero (sensor open-circuited). Pd > 4.15MPa despite compressor having been turned off.	• Check connection of Pd sensor connector. • Check for failure in Pd sensor. • Check for failure in outdoor P.C. board (I/F).
F29	—	—	Indoor unit	Other indoor trouble	Stop of corresponding unit	Indoor P.C. board does not operate normally.	• Check for failure in indoor P.C. board (failure EEPROM)
F31	F31	—	I/F	Outdoor EEPROM trouble	All stop *1	Outdoor P.C. board (I/F) does not operate normally.	• Check power supply voltage. • Check power supply noise. • Check for failure in outdoor P.C. board (I/F).
H01	H01	1∗: Compressor 1 side 2∗: Compressor 2 side	Compressor P.C. board	Compressor breakdown	All stop	Inverter current detection circuit detects overcurrent and shuts system down.	• Check power supply voltage. (AC380V-415V ± 10%). • Check for failure in compressor. • Check for possible cause of abnormal overloading. • Check for failure in outdoor P.C. board (Compressor).
H02	H02	1∗: Compressor 1 side 2∗: Compressor 2 side	Compressor P.C. board	Compressor trouble (lockup) MG-CTT trouble	All stop	Overcurrent is detected several seconds after startup of inverter compressor.	• Check for failure in compressor. • Check power supply voltage. (AC380V-415V ± 10%). • Check compressor system wiring, particularly for open phase. • Check connection of connectors/terminals on compressor P.C. board. • Check conductivity of case heater. (Check for refrigerant problem inside compressor.) • Check for failure in outdoor P.C. board (Compressor). • Check outdoor MG-CTT.
H03	H03	1∗: Compressor 1 side 2∗: Compressor 2 side	Compressor P.C. board	Current detection circuit trouble	All stop	Current flow of at least specified magnitude is detected despite inverter compressor having been shut turned off.	• Check current detection circuit wiring. • Check failure in outdoor P.C. board (Compressor).

*1 Total shutdown in case of header unit
Continued operation in case of follower unit

Check code			Location of detection	Description	System status	Check code detection condition(s)	Check items (locations)
Main remote controller	Outdoor 7-segment display						
	Check code	Sub-code					
H05	H05	—	I/F	TD1 sensor miswiring (incomplete insertion)	All stop	Discharge temperature of compressor 1 (TD1) does not increase despite compressor being in operation.	• Check installation of TD1 sensor. • Check connection of TD1 sensor connector and wiring. • Check resistance characteristics of TD1 sensor. • Check for failure in outdoor P.C. board (I/F).
H06	H06	—	I/F	Activation of low-pressure protection	All stop	Low-pressure Ps sensor detects operating pressure lower than 0.02MPa.	• Check service valves to confirm full opening (both gas and liquid sides). • Check outdoor PMVs for clogging (PMV1, 2, 3). • Check for failure in SV4 circuits. • Check for failure in low-pressure Ps sensor. • Check indoor filter for clogging. • Check valve opening status of indoor PMV. • Check refrigerant piping for clogging. • Check operation of outdoor fan (during heating). • Check for insufficiency in refrigerant quantity.
H07	H07	—	I/F	Low oil level protection	All stop	Operating compressor detects continuous state of low oil level for about 2 hours.	<All outdoor units in corresponding line to be checked> • Check connection and installation of TK1 and TK2 sensors. • Check resistance characteristics of TK1 and TK2 sensors. • Check for gas or oil leak in same line. • Check for refrigerant problem inside compressor casing. • Check SV3D, SV3F valves for failure. • Check oil return circuit of oil separator for clogging. • Check oil equalizing circuit for clogging.
H08	H08	01: TK1 sensor trouble 02: TK2 sensor trouble	I/F	Trouble in temperature sensor for oil level detection	All stop	Sensor resistance is infinity or zero (open/short circuit).	• Check connection of TK1 sensor connector. • Check resistance characteristics of TK1 sensor. • Check for failure in outdoor P.C. board (I/F).
					All stop	Sensor resistance is infinity or zero (open/short circuit).	• Check connection of TK2 sensor connector. • Check resistance characteristics of TK2 sensor. • Check for failure in outdoor P.C. board (I/F).
H15	H15	—	I/F	TD2 sensor miswiring (incomplete insertion)	All stop	Discharge temperature of (TD2) does not increase despite compressor 2 being in operation.	• Check installation of TD2 sensor. • Check connection of TD2 sensor connector and wiring. • Check resistance characteristics of TD2 sensor. • Check for failure in outdoor P.C. board (I/F).

Check code			Location of detection	Description	System status	Check code detection condition(s)	Check items (locations)
Main remote controller	Outdoor 7-segment display						
	Check code	Sub-code					
H16	H16	01: TK1 oil circuit trouble 02: TK2 oil circuit trouble	I/F	Oil level detection circuit trouble	All stop	No temperature change is detected by TK1 despite compressor 1 having been started.	• Check for disconnection of TK1 sensor. • Check resistance characteristics of TK1 sensor. • Check for connection trouble involving TK1 and TK2 sensors • Check for clogging in oil equalizing circuit capillary. • Check for refrigerant entrapment inside compressor.
						No temperature change is detected by TK2 despite compressor 2 having been started.	• Check for disconnection of TK2 sensor. • Check resistance characteristics of TK2 sensor. • Check for connection trouble involving TK1 and TK2 sensors • Check SV3F valve malfunction. • Check for clogging in oil equalizing circuit capillary. • Check for refrigerant entrapment inside compressor.
H17	H17	1∗: Compressor 1 side 2∗: Compressor 2 side	Compressor P.C. board	Compressor trouble (Step-out)	All stop	Judged that the synchronization could not be taken.	• Check power supply voltage. (AC380V-415V ± 10%). • Check for failure in compressor. • Check for possible cause of abnormal overloading. • Check for failure in outdoor P.C. board (compressor).
L02	L02	—	Indoor unit	Outdoor units model disagreement trouble	Stop of corresponding unit	In case of different outdoor unit (Not corresponded to Air to Air Heat Exchanger type)	• Check outdoor unit model. (Check whether the outdoor unit corresponds to Air to Air Heat Exchanger type or not.)
L03	—	—	Indoor unit	Duplicated indoor header unit	Stop of corresponding unit	There are more than one header units in group.	• Check indoor addresses. • Check for any change made to remote controller connection (group/ individual) since indoor address setting.
L04	L04	—	I/F	Duplicated outdoor line address	All stop	There is duplication in line address setting for outdoor units belonging to different refrigerant piping systems.	• Check line addresses.
L05	—	—	I/F	Duplicated priority indoor unit (as displayed on priority indoor unit)	All stop	More than one indoor units have been set up as priority indoor unit.	• Check display on priority indoor unit.
L06	L06	No. of priority indoor units	I/F	Duplicated priority indoor unit (as displayed on indoor unit other than priority indoor unit)	All stop	More than one indoor units have been set up as priority indoor unit.	• Check displays on priority indoor unit and outdoor unit.
L07	—	—	Indoor unit	Connection of group control cable to standalone indoor unit	Stop of corresponding unit	There is at least one standalone indoor unit to which group control cable is connected.	• Check indoor addresses.
L08	L08	—	Indoor unit	Indoor group / addresses not set	Stop of corresponding unit	Address setting has not been performed for indoor units.	• Check indoor addresses. **Note:** **This code is displayed when power is turned on for the first time after installation.**
L09	—	—	Indoor unit	Indoor capacity not set	Stop of corresponding unit	Capacity setting has not been performed for indoor unit.	Set indoor capacity. (DN = 11)

<table>
<tr><th colspan="3">Check code</th><th rowspan="3">Location of detection</th><th rowspan="3">Description</th><th rowspan="3">System status</th><th rowspan="3">Check code detection condition(s)</th><th rowspan="3">Check items (locations)</th></tr>
<tr><th rowspan="2">Main remote controller</th><th colspan="2">Outdoor 7-segment display</th></tr>
<tr><th>Check code</th><th>Sub-code</th></tr>
<tr><td>L10</td><td>L10</td><td>—</td><td>I/F</td><td>Outdoor capacity not set</td><td>All stop</td><td>Initial setting of I/F P.C. board has not been implemented.</td><td>• Check model setting of P.C. board for servicing outdoor I/F P.C. board.</td></tr>
<tr><td>L20</td><td>—</td><td>—</td><td>Network adaptor Indoor unit</td><td>Duplicated central control address</td><td>All stop</td><td>There is duplication in central control address setting.</td><td>• Check central control addresses.</td></tr>
<tr><td>L23</td><td>—</td><td>—</td><td>I/F</td><td>SW setting mistake</td><td>All stop</td><td>Outdoor P.C. board (I/F) does not operate normally.</td><td>• Check switch setting of outdoor P.C. board (I/F).</td></tr>
<tr><td>L28</td><td>L28</td><td>—</td><td>I/F</td><td>Too many outdoor units connected</td><td>All stop</td><td>There are more than 5 outdoor units.</td><td>• Check No. of outdoor units connected (Only up to 5 units per system allowed).
• Check communication lines between outdoor units.
• Check for failure in outdoor P.C. board (I/F).</td></tr>
<tr><td>L29</td><td>L29</td><td><table><tr><th></th><th colspan="4">P.C.board</th></tr><tr><th></th><th colspan="2">Compressor</th><th colspan="2">Fan Motor</th></tr><tr><th></th><th>1</th><th>2</th><th>1</th><th>2</th></tr><tr><td>01</td><td>O</td><td></td><td></td><td></td></tr><tr><td>02</td><td></td><td>O</td><td></td><td></td></tr><tr><td>03</td><td>O</td><td>O</td><td></td><td></td></tr><tr><td>08</td><td></td><td></td><td>O</td><td></td></tr><tr><td>09</td><td>O</td><td></td><td>O</td><td></td></tr><tr><td>0A</td><td></td><td>O</td><td>O</td><td></td></tr><tr><td>0B</td><td>O</td><td>O</td><td>O</td><td></td></tr><tr><td>10</td><td></td><td></td><td></td><td>O</td></tr><tr><td>11</td><td>O</td><td></td><td></td><td>O</td></tr><tr><td>12</td><td></td><td>O</td><td></td><td>O</td></tr><tr><td>13</td><td>O</td><td>O</td><td></td><td>O</td></tr><tr><td>18</td><td></td><td></td><td></td><td>O</td></tr><tr><td>19</td><td>O</td><td></td><td></td><td>O</td></tr><tr><td>1A</td><td></td><td>O</td><td></td><td>O</td></tr><tr><td>1B</td><td>O</td><td>O</td><td></td><td>O</td></tr></table>Circle (O): Trouble P.C. board</td><td>I/F</td><td>Trouble in No. of P.C. board</td><td>All stop</td><td>Insufficient number of P.C. board are detected when power is turned on.</td><td>• Check model setting of P.C. board for servicing outdoor I/F P.C. board.
• Check connection of UART communication connector.
• Check compressor P.C. board, fan P.C. board, and I/F P.C. board for failure.</td></tr>
<tr><td>L30</td><td>L30</td><td>Detected indoor address</td><td>Indoor unit</td><td>Indoor external interlock (External abnormal input)</td><td>Stop of corresponding unit</td><td>• Indoor unit has been shut down due to external abnormal input signal.</td><td>When external device is connected:
1) Check for trouble in external device.
2) Check for trouble in indoor P.C. board.
When external device is not connected:
1) Check for trouble in indoor P.C. board.</td></tr>
<tr><td>—</td><td>L31</td><td>—</td><td>I/F</td><td>Extended IC trouble</td><td>Continued operation</td><td>There is part failure in P.C. board (I/F).</td><td>Check outdoor P.C. board (I/F).</td></tr>
<tr><td>P01</td><td>—</td><td>—</td><td>Indoor unit</td><td>Indoor fan motor trouble</td><td>Stop of corresponding unit</td><td></td><td>• Check the lock of fan motor (AC fan).
• Check wiring.</td></tr>
<tr><td>P03</td><td>P03</td><td>—</td><td>I/F</td><td>Discharge temperature TD1 trouble</td><td>All stop</td><td>Discharge temperature (TD1) exceeds 115 ˚C.</td><td>• Check outdoor service valves (gas side, liquid side) to confirm full opening.
• Check outdoor PMVs (PMV1, 2, 3, 4) for clogging.
• Check resistance characteristics of TD1 sensor.
• Check for insufficiency in refrigerant quantity.
• Check for failure in 4-way valve.
• Check for leakage of SV4 circuit.
• Check SV4 circuit (wiring or installation trouble in SV41 or SV42).</td></tr>
</table>

Check code			Location of detection	Description	System status	Check code detection condition(s)	Check items (locations)
Main remote controller	Outdoor 7-segment display						
	Check code	Sub-code					
P04	P04	1∗: Compressor 1 side 2∗: Compressor 2 side	I/F	Activation of high-pressure SW	All stop	High-pressure SW is activated.	• Check connection of high-pressure SW connector. • Check for failure in Pd pressure sensor. • Check outdoor service valves (gas side, liquid side) to confirm full opening. • Check for failure in outdoor fan. • Check for failure in outdoor fan motor. • Check outdoor PMVs (PMV1, 2, 3) for clogging. • Check indoor/outdoor heat exchangers for clogging. • Check for short-circuiting of outdoor suction/discharge air flows. • Check for failure in outdoor P.C. board (I/F). • Check for trouble in indoor fan system (possible cause of air flow reduction). • Check opening status of indoor PMV. • Check indoor-outdoor communication line for wiring trouble. • Check for failure operation of check valve in discharge pipe convergent section. • Check gas balancing SV4 valve circuit. • Check for refrigerant overcharging.
P05	P05	00: Power detection trouble 01: Open phase 02: Power supply miswiring	I/F	Power detection trouble / Open phase detection / Power supply miswiring	All stop	• Open phase is detected when power is turned on. • Inverter DC voltage is too high (overvoltage) or too low (undervoltage).	• Check for failure in outdoor P.C. board (I/F). • Check wiring of outdoor power supply. • Check power supply voltage.
		1∗: Compressor 1 side 2∗: Compressor 2 side	Compressor P.C. board	Compressor Vdc trouble			
P07	P07	1∗: Compressor 1 side 2∗: Compressor 2 side	Compressor P.C. board	Heat sink overheating trouble	All stop	Temperature sensor built into IPM (TH) is overheated.	• Check outdoor fan system trouble. • Check IPM and heat sink for thermal performance for failure installation. (e.g. mounting screws and thermal conductivity) • Check for failure in Compressor P.C. board. (failure IPM built-in temperature sensor (TH))
		01: Compressor 1 heat sink trouble 02: Compressor 2 heat sink trouble 04: Heat sink dew condensation	I/F	Heat sink overheating trouble Heat sink dew condensation trouble	All stop	Condensation detection on heat sink has occurred four times or more in operation. Temperature sensor built into IPM (TH) is overheated.	• Check outdoor fan system trouble. • Check IPM and heat sink for thermal performance for troubled installation. (e. g. mounting screws and thermal conductivity) • Check for failure in compressor P.C. board. (failure IPM built-in temperature sensor (TH)) • Check shortage of refrigerant. • Check outdoor service valves. • Check connection of TL2 sensor. • Check resistance characteristics of TL2 sensor. • Check resistance characteristics of TO sensor. • Check malfunctions of Pd and Ps sensors. • Check outdoor I/F P.C. board malfunction. • Check PMV2 and PMV3

Check code			Location of detection	Description	System status	Check code detection condition(s)	Check items (locations)
Main remote controller	Outdoor 7-segment display						
	Check code	Sub-code					
P10	P10	Detected indoor address	Indoor unit	Indoor overflow trouble	All stop	• Float switch operates. • Float switch circuit is open-circuited or disconnected at connector.	• Check float switch connector. • Check operation of drain pump. • Check drain pump circuit. • Check drain pipe for clogging. • Check for failure in indoor P.C. board.
P11	—	—	I/F	Outdoor heat exchanger freeze trouble	All stop	• Outdoor heat exchanger remaining frost detection has occurred eight times or more due to abnormal frost formation in heating operation.	• Check shortage of refrigerant. • Check connection of TE1, TE2 and TE3 sensors. • Check resistance characteristics of TE1, TE2, and TE3 sensors. • Check disconnection of TS1 sensor. • Check resistance characteristics of TS1 sensor. • Check outdoor I/F P.C. board malfunction. • Check operation of 4 way valve. • Check operation of outdoor PMV (1, 2, 3). • Check short circuit from outlet air to inlet air.
P12	—	—	Indoor unit	Indoor fan motor trouble	Stop of corresponding unit	• Motor speed measurements continuously deviate from target value. • Overcurrent protection is activated.	• Check connection of fan connector and wiring. • Check for failure in fan motor. • Check for failure in indoor P.C. board. • Check impact of outside air treatment (OA).
P13	P13	—	I/F	Outdoor liquid backflow detection trouble	All stop	<During cooling operation> When system is in cooling operation, high pressure is detected in the unit that has been turned off. <During heating operation> When system is in heating operation, low pressure is detected to be high in unit that has been turned off.	• Check full-close operation of outdoor PMV (1, 2, 3, 4). • Check for failure in Pd or Ps sensor. • Check failure in outdoor P.C. board (I/F). • Check capillary of oil separator oil return circuit for clogging. • Check for leakage of check valve in discharge pipe
P15	P15	01: TS condition	I/F	Gas leak detection (TS1 condition)	All stop	Protective shutdown due to sustained suction temperature at or above judgment criterion for at least 10 minutes is repeated four times or more. <TS trouble judgment criterion> In cooling operation: 60 ˚C In heating operation: 40 ˚C	• Check for insufficiency in refrigerant quantity. • Check outdoor service valves (gas side, liquid side) to confirm full opening. • Check PMVs (PMV1, 2, 3, 4) for clogging. • Check resistance characteristics of TS1 sensor. • Check for failure in 4-way valve. • Check SV4 circuit for leakage
		02: TD condition	I/F	Gas leak detection (TD condition)	All stop	Protective shutdown due to sustained discharge temperature (TD1 or TD2) at or above 108 ˚C for at least 10 minutes is repeated four times or more.	• Check for insufficiency in refrigerant quantity. • Check PMVs (PMV 1, 2, 3, 4) for clogging. • Check resistance characteristics of TD1 and TD2 sensors. • Check indoor filter for clogging. • Check piping for clogging. • Check SV4 circuit (for leakage or coil installation trouble).

Check code			Location of detection	Description	System status	Check code detection condition(s)	Check items (locations)
Main remote controller	Outdoor 7-segment display						
	Check code	Sub-code					
P17	P17	—	I/F	Discharge temperature TD2 trouble	All stop	Discharge temperature (TD2) exceeds 115 ˚C.	• Check outdoor service valves (gas side, liquid side) to confirm full opening. • Check outdoor PMVs (PMV1, 2, 3, 4) for clogging. • Check resistance characteristics of TD2 sensor. • Check for failure in 4-way valve. • Check SV4 circuit for leakage. • Check SV4 circuit (for wiring or installation trouble involving SV41 and SV42).
P19	P19	Detected outdoor unit No.	I/F	4-way valve reversing trouble	All stop	Abnormal refrigerating cycle data is collected during heating operation.	• Check for failure in main body of 4-way valve. • Check for coil failure in 4-way valve and loose connection of its connector. • Check resistance characteristics of TS1 and TE1,TE2 sensors. • Check output voltage characteristics of Pd and Ps pressure sensors. • Check for wiring trouble involving TE1 and TL1 sensors.
P20	P20	—	I/F	Activation of high-pressure protection	All stop	<During cooling operation> Pd sensor detects pressure equal to or greater than 3.85 MPa. <During heating operation> Pd sensor detects pressure equal to or greater than 3.6 MPa.	• Check for failure in Pd pressure sensor. • Check service valves (gas side, liquid side) to confirm full opening. • Check for failure in outdoor fan. • Check for failure in outdoor fan motor. • Check outdoor PMV (PMV1, 2, 3, 4) for clogging. • Check indoor/outdoor heat exchangers for clogging. • Check for short-circuiting of outdoor suction/ discharge air flows. • Check for failure in outdoor P.C. board (I/F). • Check for failure in indoor fan system (possible cause of air flow reduction). • Check opening status of indoor PMV. • Check indoor-outdoor communication line for wiring trouble. • Check for troble operation of check valve in discharge pipe convergent section. • Check gas balancing SV4 valve circuit. • Check for refrigerant overcharging.

Check code			Location of detection	Description	System status	Check code detection condition(s)	Check items (locations)
Main remote controller	Outdoor 7-segment display						
	Check code	Sub-code					
P22	P22	1∗: Fan P.C. board 1 2∗: Fan P.C. board 2	Fan INV. P.C. board	Outdoor fan P.C. board trouble	All stop	Protected operation of Fan inverter P.C. board	• Check fan motor. • Check for failure in fan P.C. board. • Check connection of fan motor connector. • Check power voltage of the main power supply.
P26	P26	1∗: Compressor 1 side 2∗: Compressor 2 side	Compressor P.C. board	IPM, Compressor shortcircuit protection trouble	All stop	Overcurrent is momentarily detected during startup of compressor.	• Check connector connection and wiring on compressor P.C. board. • Check for failure in compressor (layer shortcircuit). • Check for failure in outdoor P.C. board (Compressor).
P29	P29	1∗: Compressor 1 side 2∗: Compressor 2 side	Compressor P.C. board	Compressor position detection circuit trouble	All stop	Position detection is not going on normally.	• Check wiring and connector connection. • Check for compressor layer short-circuit. • Check for failure in compressor P.C. board.
P31	—	—	Indoor unit	Other indoor trouble (group follower unit trouble)	Stop of corresponding unit	There is trouble in other indoor unit in group, resulting in detection of E07/L07/L03/L08.	• Check indoor P.C. board.

Check codes Displayed on by Central Control Device

Check code			Location of detection	Description	System status	Check code detection condition(s)	Check items (locations)
Main remote controller	Outdoor 7-segment display						
	Check code	Sub-code					
E03	—	—	Indoor unit	Indoor-remote controller communication trouble (detected at indoor end)	Stop of corresponding unit	There is no communication from remote controller (including wireless) or network adaptor.	• Check remote controller and network adaptor wiring.
C05	—		Central control device	Central control device transmission trouble	Continued operation	Central control device is unable to transmit signal.	• Check for failure in central control device. • Check for failure in central control communication line. • Check termination resistance setting.
C06	—		Central control device	Central control device reception trouble	Continued operation	Central control device is unable to receive signal.	• Check for failure in central control device. • Check for failure in central control communication line. • Check terminator resistor setting. • Check power supply for devices at other end of central control communication line. • Check failure in P.C. boards of devices at other end of central control communication line.
C12	—		General-purpose device I/F	Batch alarm for general-purpose device control interface	Continued operation	Trouble signal is input to control interface for general-purpose devices.	• Check trouble input.
P30	Differs according to nature of alarm-causing trouble		Central control device	Group control follower unit trouble	Continued operation	Trouble occurs in follower unit under group control. ([P30] is displayed on central control remote controller.)	• Check check code of unit that has generated alarm.
	(L20 displayed.)			Duplicated central control address	Continued operation	There is duplication in central control addresses.	• Check address settings.

▼ Points to Note When Servicing Compressor

(1) When checking the outputs of inverters, remove the wiring from all the compressors.

▼ How to Check Inverter Output

(1) Turn off the power supply.
(2) Remove compressor leads from the compressor P.C. board.
(The model with two compressor should remove the wiring for two sets (6 leads).
(3) Turn on the power supply and start cooling or heating operation.
(4) Check the output voltage across each pair of inverter-side. If the result is unsatisfactory according to the judgment criteria given in the table below, replace the compressor P.C. board.

No.	Measured leads	Criterion
1	CN201 - CN202	380~580V
2	CN202 - CN203	380~580V
3	CN203 - CN201	380~580V

▼ How to Check Resistance of Compressor Winding

(1) Turn off the power supply.
(2) Remove compressor leads from the compressor P.C. board. (Be sure to remove all the leads.)
(3) With each compressor, check the phase-to-phase winding resistances and winding-to-outdoor cabinet resistance using a multimeter.
- Earth trouble?
  → It is normal if the winding-to-outdoor cabinet resistance is 10MΩ or more.
- Inter-winding short circuit?
  → It is normal if the phase-to-phase resistances are in the 0.1-1.0Ω range. (Use a digital multimeter.)

▼ How to Check Outdoor Fan Motor

(1) Turn off the power supply.
(2) Remove fan motor leads from the fan P.C. board for the outdoor fan.
(3) Rotate the fan by hand. If the fan does not turn, the fan motor is faulty (locked up). Replace the fan motor. If the fan turns, measure the phase-to-phase winding resistances using a multimeter. It is normal if the measurements are in the 8.1-9.9 range. (Use a digital multimeter.)

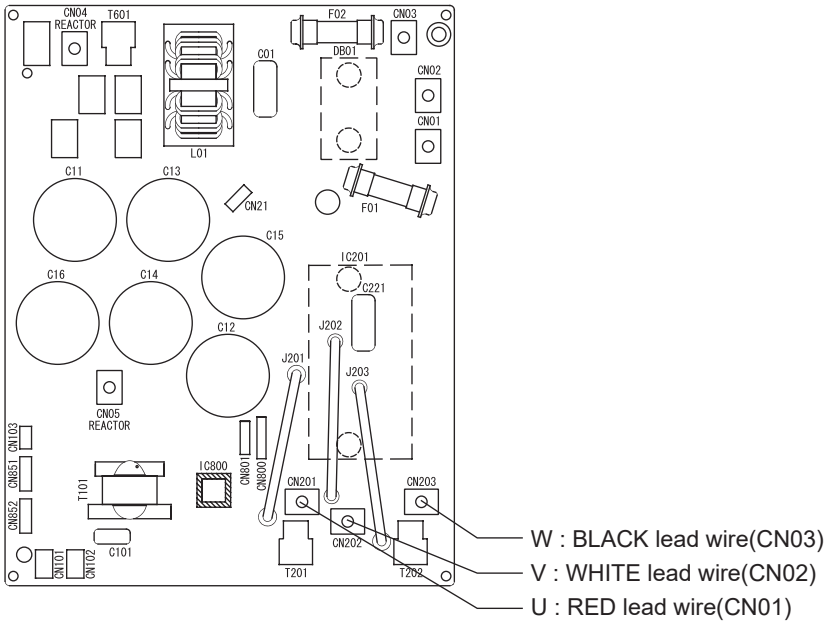

9-5. Diagnostic Procedure for Each Check Code (Indoor Unit)

Check code	Check code name	Cause
[E02]	Signal transmission trouble on the remote controller	Unable to send signals to indoor units

* The check code is not indicated on the central control device or the 7-segment indication on the outdoor unit.

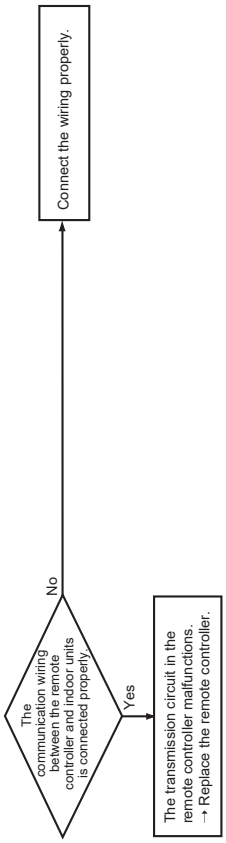

Check code	Check code name	Cause
[E03]	Communication trouble between the indoor unit and remote controller (detected on the indoor unit)	1. No signal from a wired remote control and a wireless receiving unit. 2. In case the Central remote controller is used without changing DN code [103]. (Indoor unit before May, 2021 manufacture)

- A check code [E03] is displayed when an indoor unit cannot receive the signal from a wired remote control and a wireless receiving unit. Check the communication wiring from the remote controller A and B.
- When using an air conditioner without a remote controller by indoor unit before May, 2021 manufacture, the setting change to 0001 from 0000 is requied in the DN code [103]. A check code [E03] will be displayed, if it is used without making a setting change. (Excluding High wall type)
- Since communication is impossible, this check code [E03] is not displayed on a wired remote control. Check code [E03] will be displayed on the Centrol remote controller.

Check code	Check code name	Cause
[E01]	Communication trouble between the indoor unit and remote controller (detected on the remote controller)	1. Remote controller inter-unit wire trouble 2. Indoor power trouble 3. Indoor P.C. board trouble 4. Remote controller address setup trouble 5. Remote controller P.C. board trouble

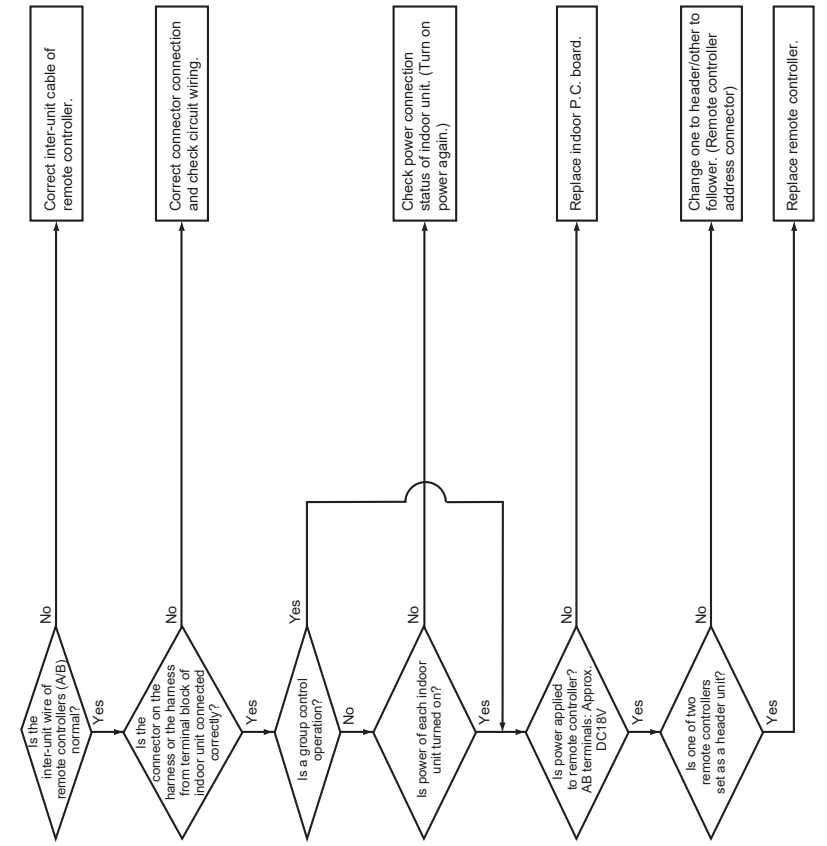

Check code	Check code name	Cause
[E04]	Indoor/Outdoor communication circuit trouble (Detected at indoor side)	1. Power of outdoor unit was firstly turned on. 2. Connection trouble of communication line between indoor and outdoor 3. Terminator resistor setup trouble on communication between indoor and outdoor 4. Address setup trouble

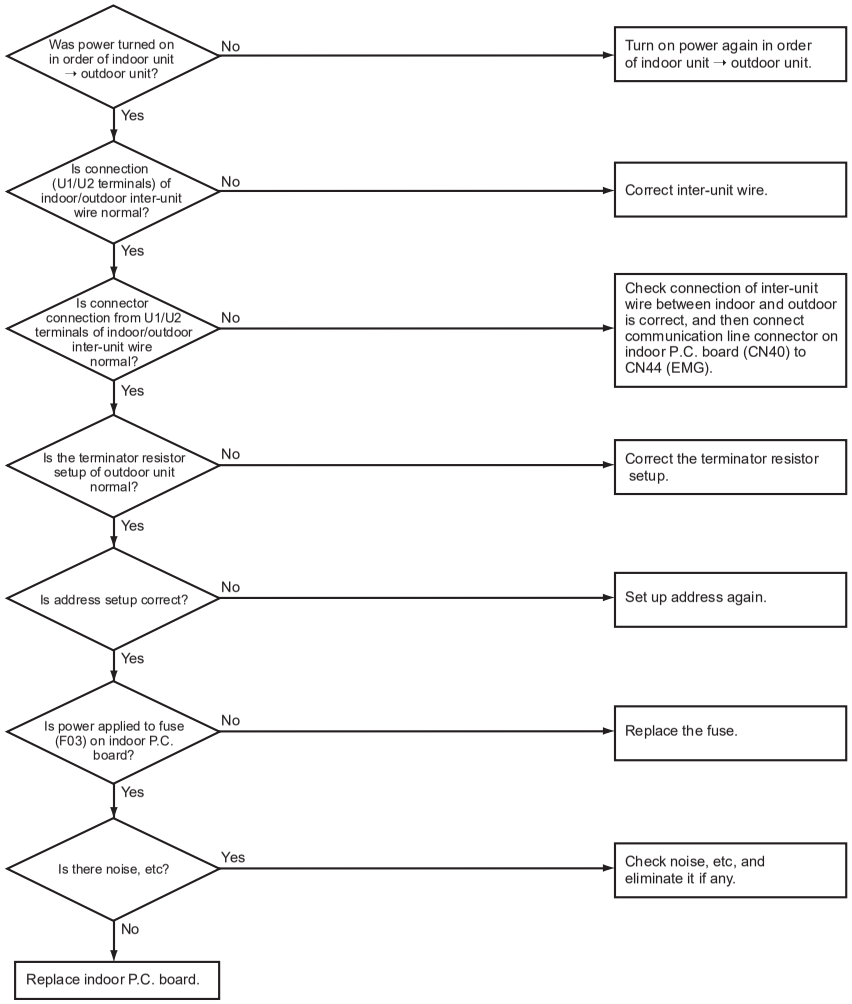

Check code	Check code name	Cause
[E08]	Duplicated indoor addresses	Indoor addresses are duplicated.

Sub-code: Duplicated indoor address

Using a wired remote controller, check the setup CODE No. (DN code) 12, 13, and 14.
When there is no address duplication, check to the following flowchart.

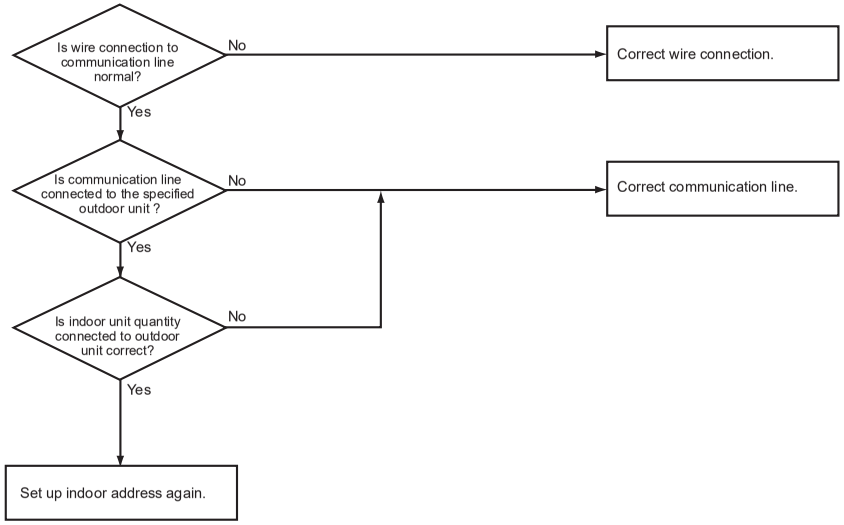

Check code	Check code name	Cause
[E09]	Duplicated header remote controller	Setup of header remote controller is duplicated.

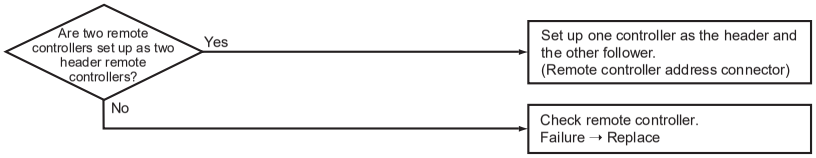

Check code	Check code name	Cause
[E10]	Communication trouble between indoor MCUs.	Indoor P.C. board trouble.

Check code	Check code name	Cause
[E11]	Communication trouble between Application control kit and Indoor unit	1.Application control kit trouble 2. Indoor P.C. board trouble

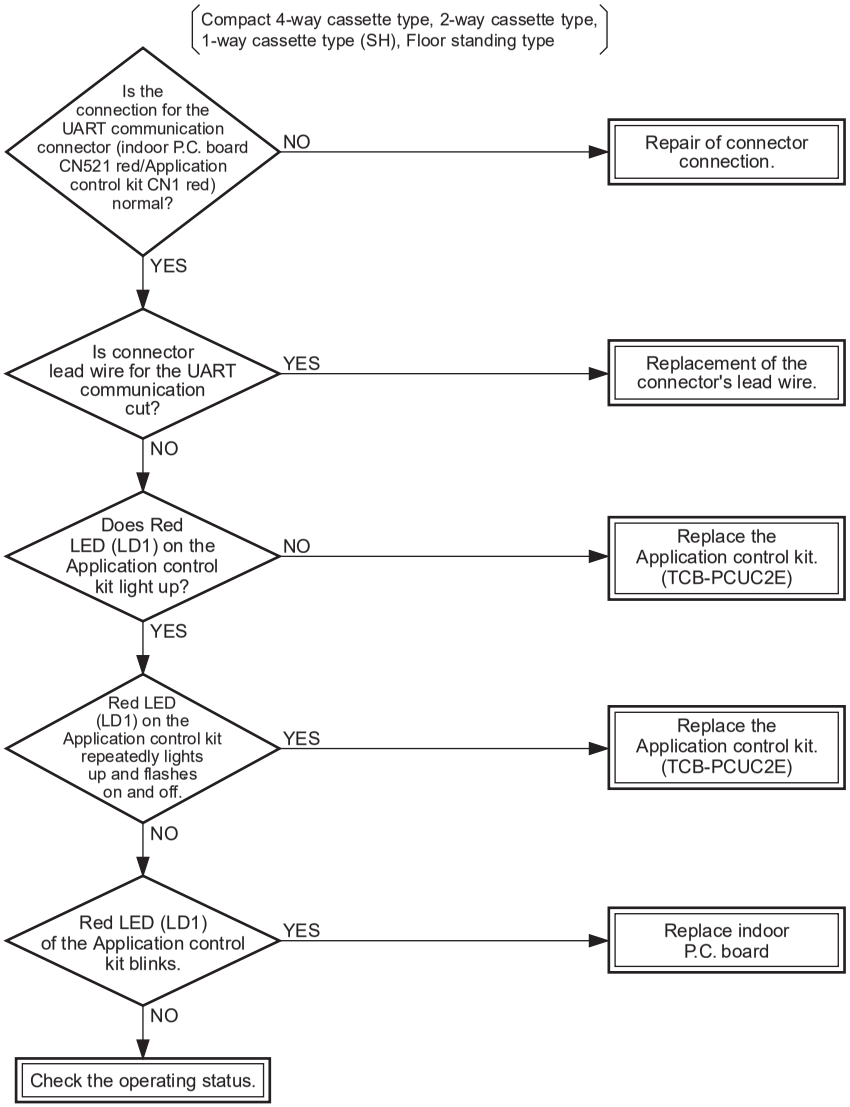

Check code	Check code name	Cause
[E18]	Communication trouble between indoor header and follower	Regular communication between indoor header and follower is unavailable.

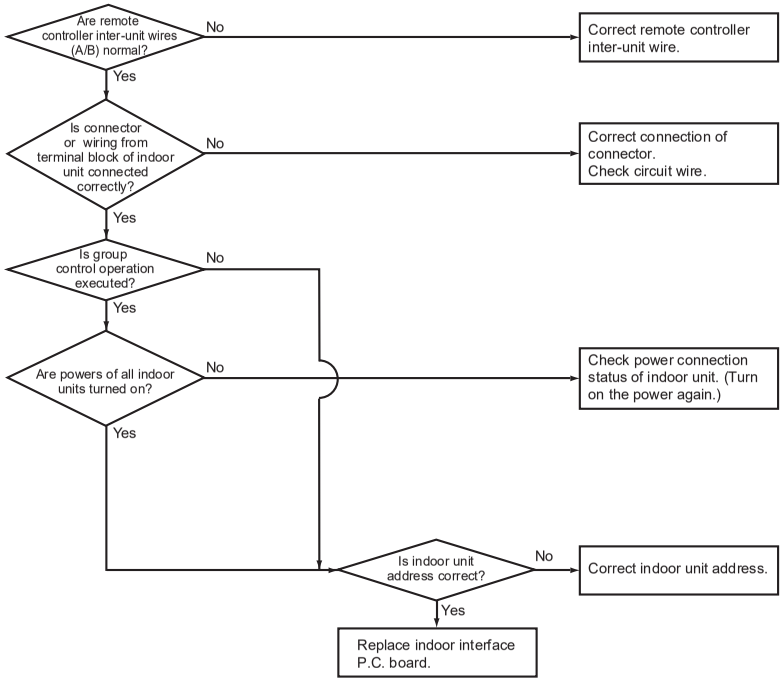

Check code	Check code name	Cause
[F01]	Indoor TCJ sensor trouble	TCJ sensor Open/Short-circuit

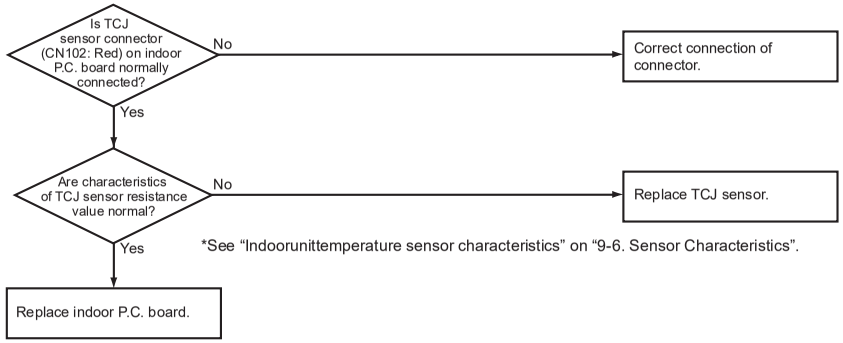

Check code	Check code name	Cause
[F02]	Indoor TC2 sensor trouble	TC2 sensor Open/Short-circuit

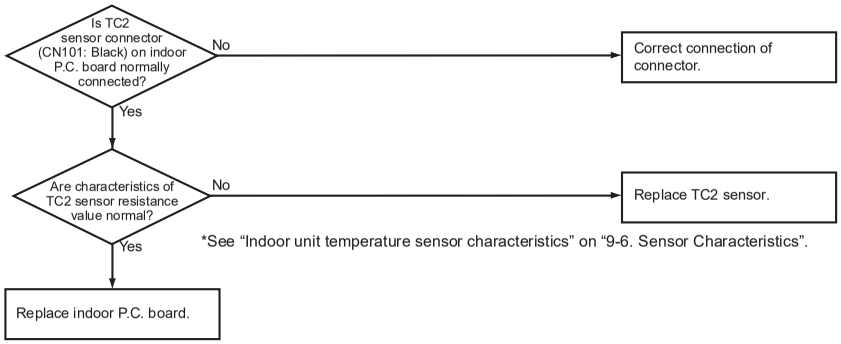

Check code	Check code name	Cause
[F03]	Indoor TC1 sensor trouble	TC1 sensor Open/Short-circuit

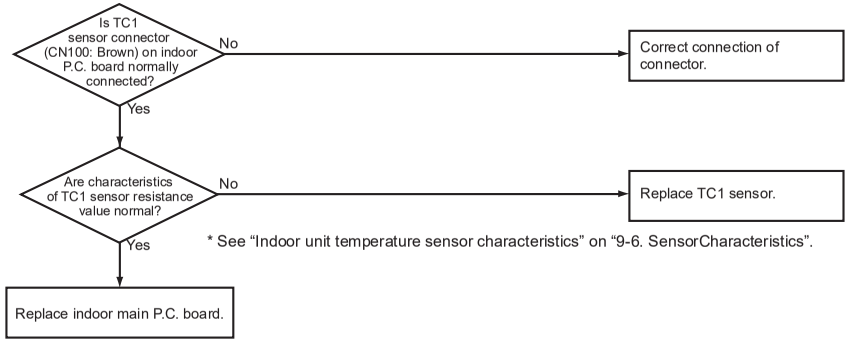

* See “Indoor unit temperature sensor characteristics” on “9-6. SensorCharacteristics”.

Check code	Check code name	Cause
[F10]	Indoor TA/TSA sensor trouble	TA sensor Open/Short-circuit

This trouble code means detection of Open/Short-circuit of TA sensor. Check disconnection of circuit for connection of connector (TA /TSA sensor : CN104, Yellow) and characteristics of sensor resistance value. (See “Indoor unit temperaturesensor characteristics” on “9-6. Sensor Characteristics”.)
If sensor is normal, replace indoor P.C. board.

Check code	Check code name	Cause
[F29]	Indoor other trouble	Indoor P.C. board trouble

This trouble is detected during operation of air conditioner of IC10 non-volatile memory (EEPROM) on indoor unit P.C.board. Replace service P.C. board.

* If EEPROM was not inserted when power was turned on or it is absolutely impossible to read/write EEPROM data, the automatic address mode is repeated.

Check code	Check code name	Cause
[F30]	Occupancy sensor trouble	1.Occupancy sensor trouble 2. Indoor P.C. board trouble

(4-way cassette type)

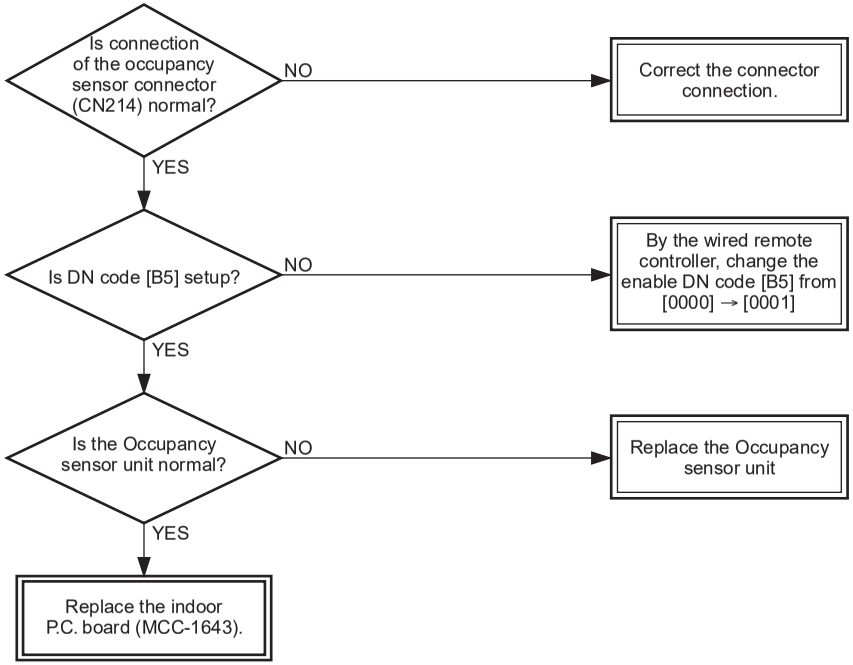

Check code	Check code name	Cause
[L03]	Duplicated indoor header units	There are two or more indoor header units in a group during group control.

1) Check whether the connection on remote controllers (group and/or individual) has been changed since the group configuration and address checking on the remote controllers finished.
2) If the group configuration and address are normal when power has been turned on, the mode automatically shifts to address setup mode. For setting up addresses again, refer to "Address setup".

Check code	Check code name	Cause
[L07]	A group line exists in an individual indoor unit	A group line is connected to an individual indoor unit.

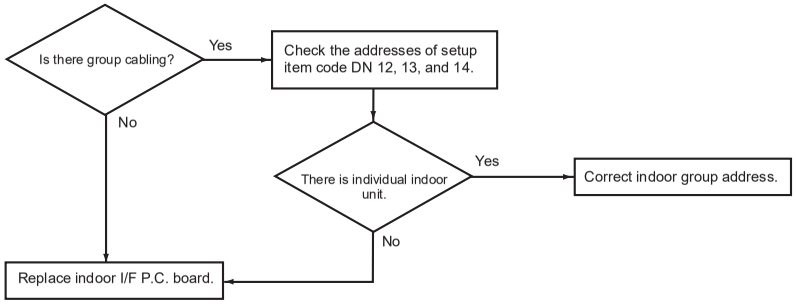

Check code	Check code name	Cause
[L08]	Indoor group / address unset	Indoor unit address is unset

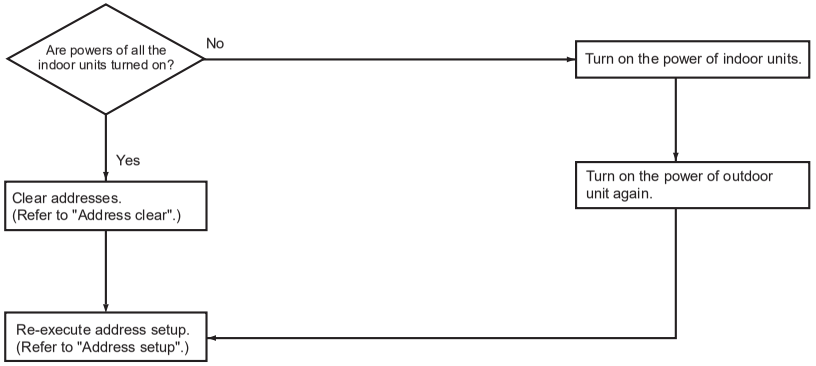

Note) This code is displayed when the power is turned on at the first time after installation. (Because the address is not yet set up)

Check code	Check code name	Cause
[L09]	Indoor capacity unset	Indoor unit's capacity is unset

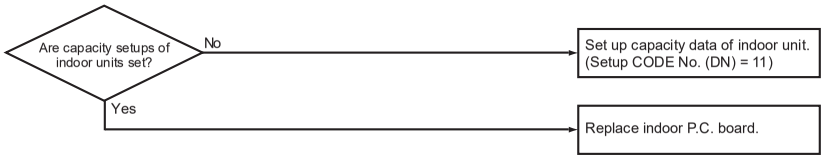

Check code	Check code name	Cause
[L20]	Duplicated central control addresses	Central control addresses are duplicated.

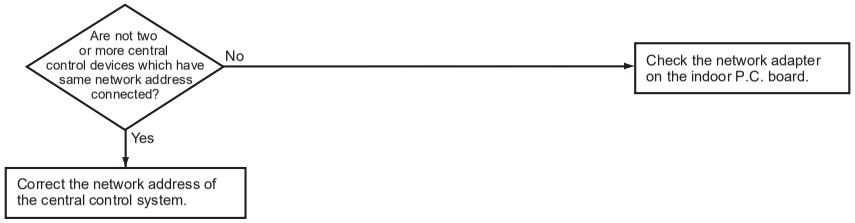

Check code	Check code name	Cause
[L30]	Interlock in indoor unit from outside	Abnormal input from the outside

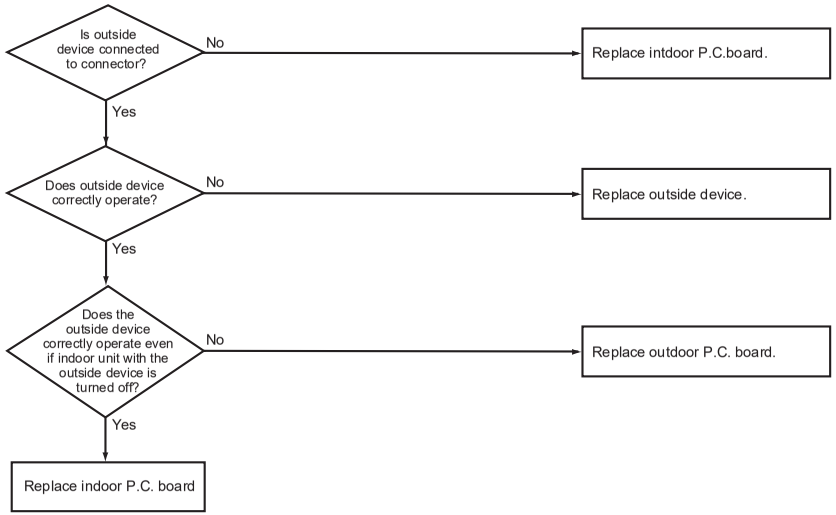

Check code	Check code name	Cause
[P10]	Water overflow in an indoor unit	1. Float SW malfunction 2. Drain pump malfunction 3. Clogging of drain pipe 4. Indoor P.C. board trouble

Sub-code: Overflowing indoor unit's address

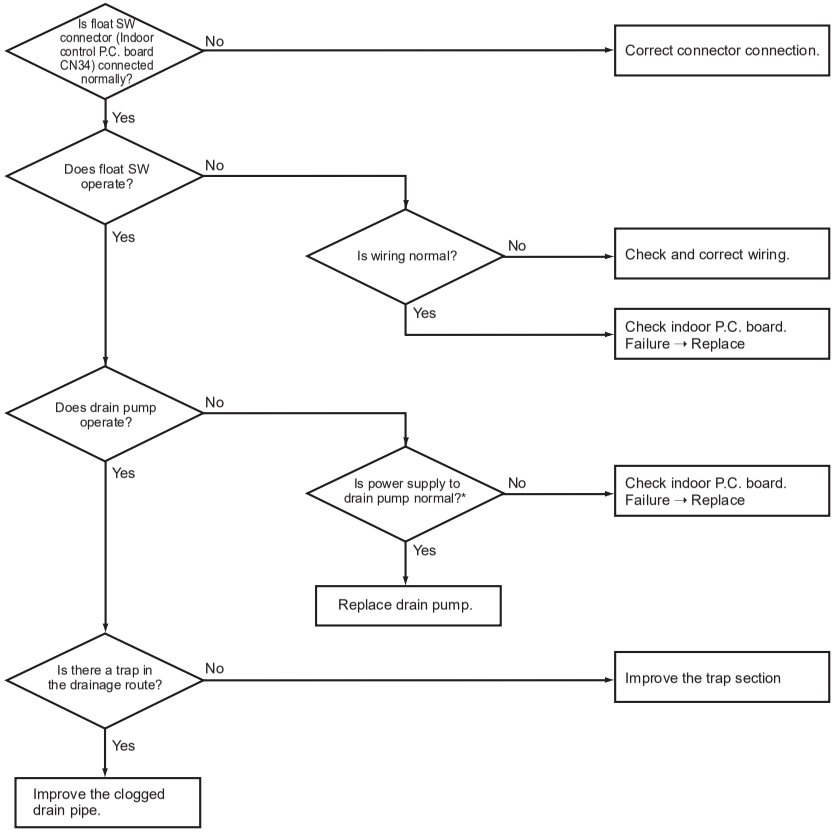

* Check there is 12V voltage of 1-2 pin of CN504 on indoor P.C. board.

Check code	Check code name	Cause
[P12]	Indoor fan motor trouble	1. Wiring trouble of fan motor connector 2. Fan motor trouble 3. Indoor P.C. board trouble

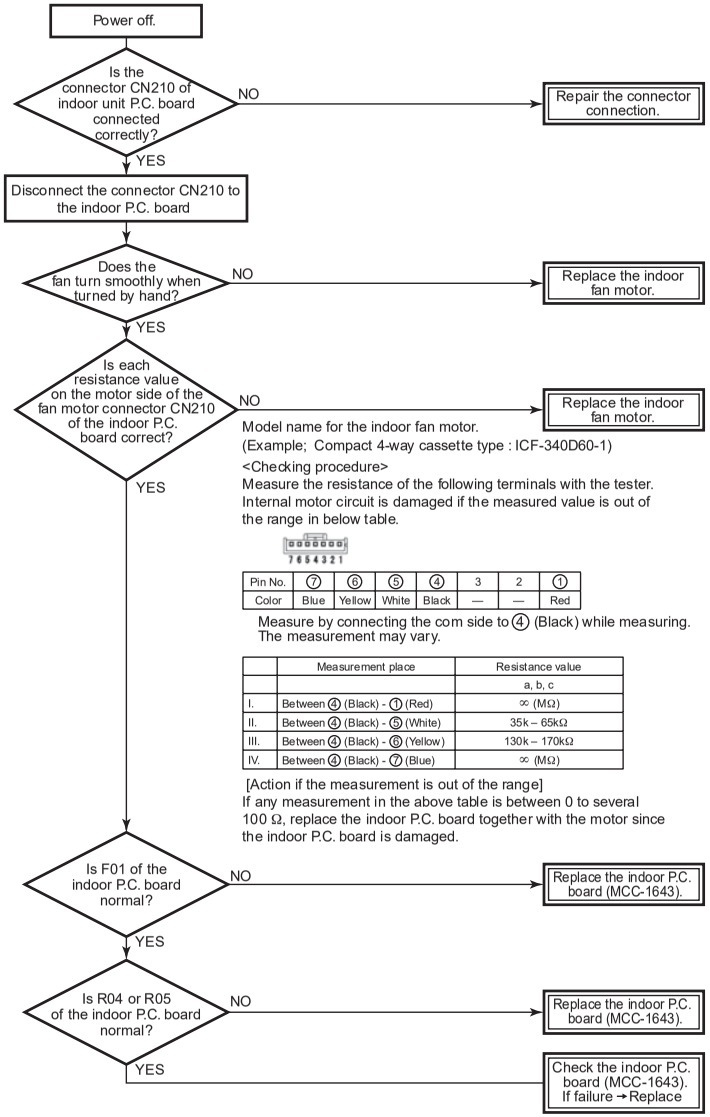

Model name for the indoor fan motor.
(Example; Compact 4-way cassette type : ICF-340D60-1)

<Checking procedure>
Measure the resistance of the following terminals with the tester.
Internal motor circuit is damaged if the measured value is out of the range in below table.

Pin No.	⑦	⑥	⑤	④	3	2	①
Color	Blue	Yellow	White	Black	—	—	Red

Measure by connecting the com side to ④ (Black) while measuring.
The measurement may vary.

	Measurement place	Resistance value
		a, b, c
I.	Between ④ (Black) - ① (Red)	∞ (MΩ)
II.	Between ④ (Black) - ⑤ (White)	35k – 65kΩ
III.	Between ④ (Black) - ⑥ (Yellow)	130k – 170kΩ
IV.	Between ④ (Black) - ⑦ (Blue)	∞ (MΩ)

[Action if the measurement is out of the range]
If any measurement in the above table is between 0 to several 100 Ω, replace the indoor P.C. board together with the motor since the indoor P.C. board is damaged.

Check code	Check code name	Cause
[P31]	Other indoor trouble (Group follower unit trouble)	Another indoor unit in the group is abnormal.

When the header unit of the group detected trouble [E03], [L03], [L07] or [L08], the follower unit of the group displays [P31] trouble and stops. There are no check code display and alarm record of the main remote controller.

Check code	Check code name	Cause
----	Wireless remote controller trouble	1. Wireless remote controller trouble 2. Indoor P.C. board trouble

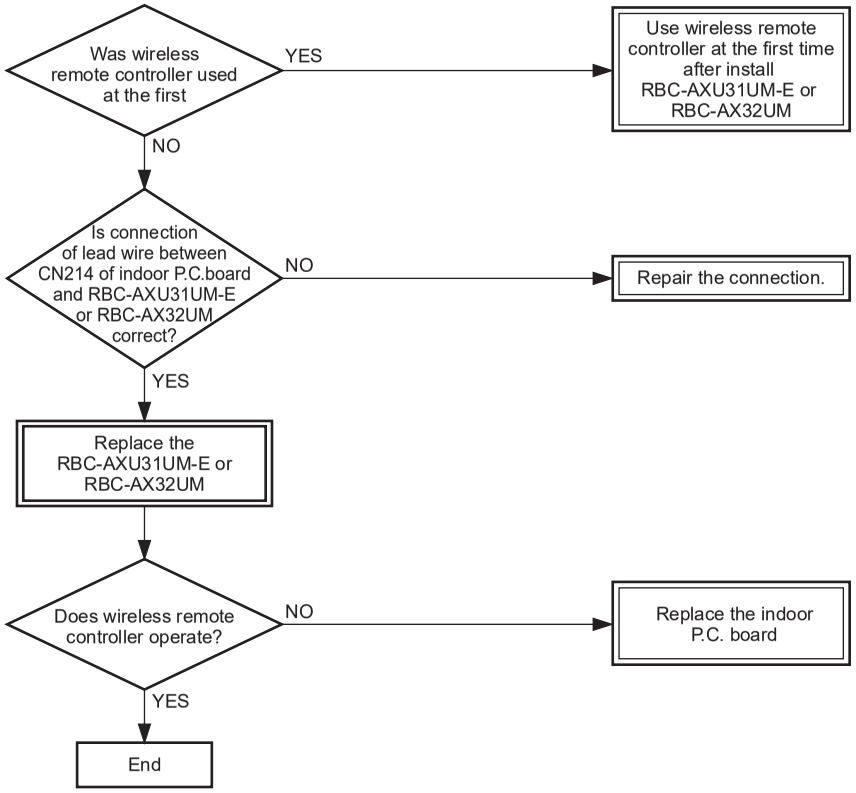

9-6. Sensor characteristics

Indoor unit

▼Temperature sensor characteristics

Indoor TA sensor

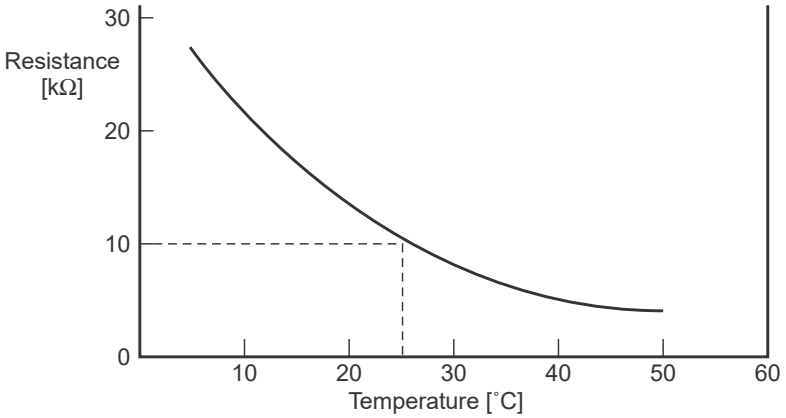

Temperature [˚C]	Resistance [kΩ]
0	33.9
5	26.1
10	20.3
15	15.9
20	12.6
25	10.0
30	8.0
35	6.4
40	5.2
45	4.2
50	3.5
55	2.6
60	2.4

Indoor TC1 sensor

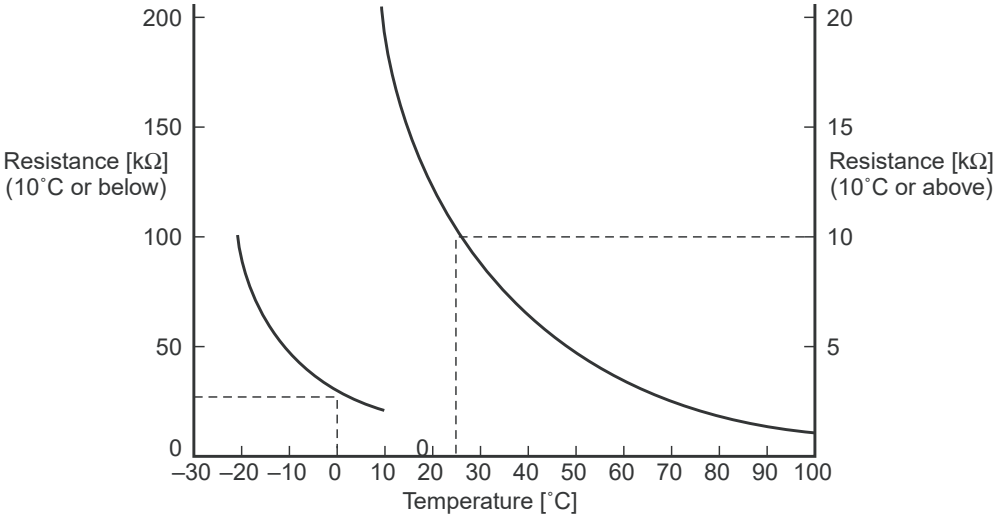

Temperature [˚C]	Resistance [kΩ]
–20	99.9
–15	74.1
–10	55.6
–5	42.2
0	32.8
5	25.4
10	19.8
15	15.6
20	12.4
25	10.0
30	8.1
35	6.5
40	5.3
45	4.4
50	3.6
55	3.0
60	2.5
65	2.1
70	1.8
75	1.5
80	1.3
85	1.1
90	1.0
95	0.8
100	0.7

Indoor TC2 and TCJ sensors

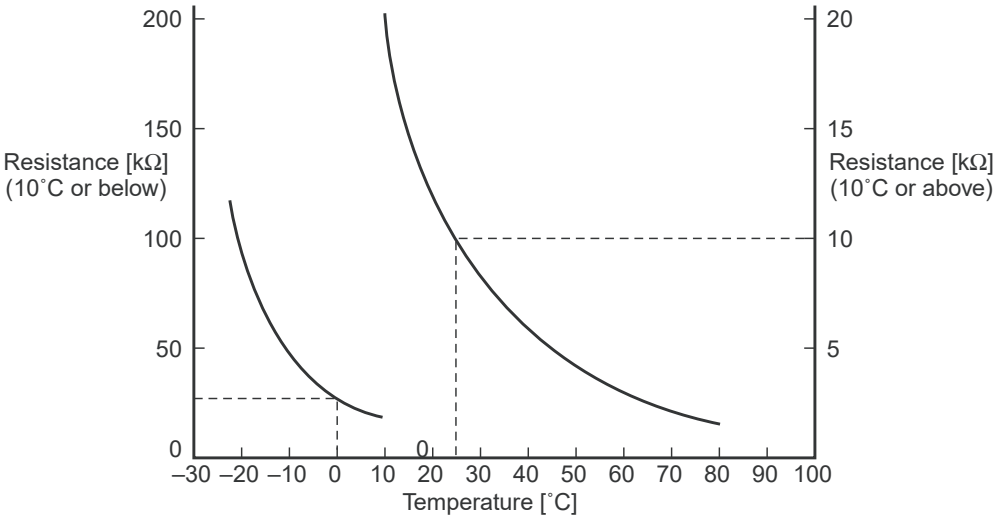

Temperature [˚C]	Resistance [kΩ]
–20	115.2
–15	84.2
–10	62.3
–5	46.6
0	35.2
5	26.9
10	20.7
15	16.1
20	12.6
25	10.0
30	8.0
35	6.4
40	5.2
45	4.2
50	3.5
55	2.8
60	2.4
65	2.0
70	1.6
75	1.4
80	1.2

9-7. Maintenance list

Aiming in environmental preservation, it is strictly recommended to clean and maintain the indoor/outdoor units of the operating air conditioning system regularly to secure effective operation of the air conditioner.
It is also recommended to maintain the units once a year regularly when operating the air conditioner for a long time.
Check periodically signs of rust or scratches, etc. on coating of the outdoor units.
Repair the defective position or apply the rust resisting paint if necessary.
If an indoor unit operates for approx. 8 hours or more per day, usually it is necessary to clean the indoor/outdoor units once three months at least.
These cleaning and maintenance should be carried out by a qualified dealer.
Although the customer has to pay the charge for the maintenance, the life of the unit can be prolonged.
Failure to clean the indoor/outdoor units regularly will cause shortage of capacity, freezing, water leakage or trouble on the compressor.

<Check list>

Part name	Object		Contents of check	Contents of maintenance
	Indoor	Outdoor		
Heat exchanger	✓	✓	• Blocking with dust, damage check	• Clean it when blocking is found.
Fan motor	✓	✓	• Audibility for sound	• When abnormal sound is heard
Filter	✓	—	• Visual check for dirt and breakage	• Clean with water if dirty • Replace if any breakage
Fan	✓	✓	• Visual check for swing and balance • Check adhesion of dust and external appearance.	• Replace fan when swinging or balance is remarkably poor. • If a large dust adheres, clean it with brush or water.
Suction/ Discharge grille	✓	—	• Visual check for dirt and scratch	• Repair or replace it if deformation or damage is found.
Drain pan	✓	—	• Check blocking by dust and dirt of drain water.	• Clean drain pan, Inclination check
Front panel, Louver	✓	—	• Check dirt and scratch.	• Cleaning/Coating with repair painting
External appearance	—	✓	• Check rust and pealing of insulator • Check pealing and floating of coating film	• Coating with repair painting

10. P.C. BOARD EXCHANGE PROCEDURES

■ Indoor unit

10-1. Replacement of indoor P.C. boards

<Note: when replacing the P.C. board for indoor unit servicing>

The nonvolatile memory (hereafter called EEPROM, IC503) on the indoor unit P.C. board before replacement includes the model specific type information and capacity codes as the factory-set value and the important setting data which have been automatically or manually set when the indoor unit is installed, such as system/indoor/group addresses, high ceiling select setting, etc.
When replacing the P.C. board for indoor unit servicing, follow the procedures below.
After replacement completes, confirm whether the settings are correct by checking the indoor unit No., Group header unit/follower unit settings and perform the cooling cycle confirmation through the trial operation.

<Replacement procedures>

CASE 1

Before replacement, the indoor unit can be turned on and the setting data can be read out by wired remote control operation.

EEPROM data read out **[1]**

⇩

Replacement of P.C. board for Indoor unit servicing and power on **[2]**

⇩

Writing the read out EEPROM data **[3]**

⇩

Power reset
(for all indoor units connected to the remote control when the group operation control is performed.)

CASE 2

The EEPROM before replacement is incomplete and the setting data cannot be read out.

Replacement of P.C. board for Indoor unit servicing and power on **[2]**

⇩

Writing the setting data to EEPROM, such as high ceiling installation setting and optional connection setting, etc., based on the customer information. **[3]**

⇩

Power reset
(for all indoor units connected to the remote control hen the group operation control is performed.)

[1] Setting data read out from EEPROM

The setting data modified on the site, other than factory-set value, stored in the EEPROM shall be read out.

<RBC-ASCU11-∗>

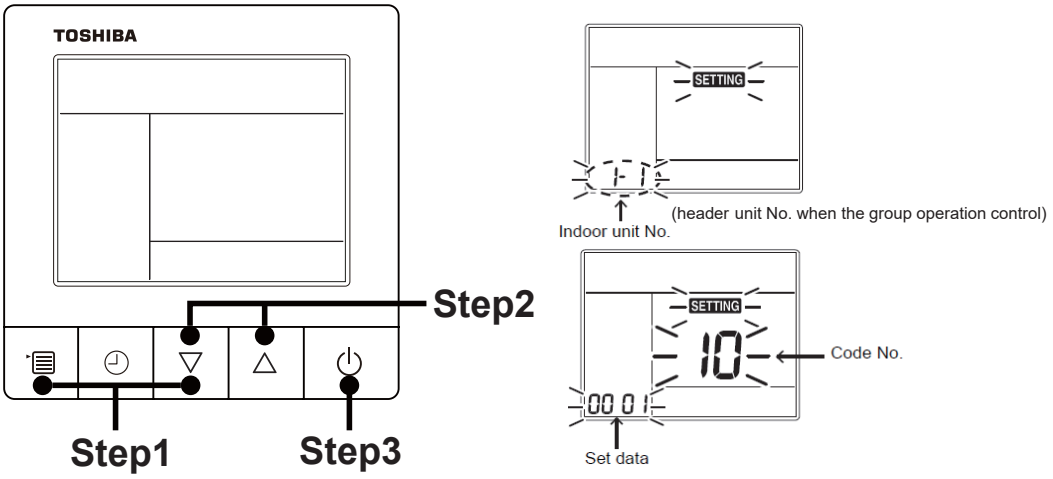

Step1 Push and hold the [menu + ▽] buttons at same time for more than 10 seconds.

* When the group operation control is performed, the unit No. displayed for the first time is the header unit No.
  At this time, the Code No. (DN) shows “10”. Also, the fan of the indoor unit selected starts its operation and the swing operation also starts if it has the louvers.

Step2 Every time when the [▽ or △] button is pushed, the indoor unit No. under the group control is displayed in order. Specify the indoor unit No. to be replaced.

1. Change the Code No. (DN) to 10 → 01 by pushing [▽ or △] buttons setting. (this is the setting for the filter sign lighting time.)
   At this time, be sure to write down the setting data displayed.
2. Change the Code No. (DN) by pushing [▽ or △] buttons.
   Similarly, be sure to write down the setting data displayed.
3. Repeat the step 2-2 to set the other settings in the same way and write down the setting data as shown in the table 1 (example).
   * The Code No. (DN) are ranged from “01” to “FE”. The Code No. (DN) may skip.

<RBC-AMT∗∗∗>

[1] Setting data read out from EEPROM

The setting data modified on the site, other than factory-set value, stored in the EEPROM shall be read out.

Step 1 Push SET , CL and TEST button on the remote controller simultaneously for more than 4 seconds.

* When the group operation control is performed, the unit No. displayed for the first time is the header unit No.
  At this time, the CODE No. (DN) shows “ 10 ”. Also, the fan of the indoor unit selected starts its operation and the swing operation also starts if it has the louvers.

Step 2 Every time when the UNIT LOUVER (left side button) button is pushed, the indoor unit No. under the group control is displayed in order. Specify the indoor unit No. to be replaced.

1. **Change e the CODE No. (DN) to 10 → 01 by pushing ▼ / ▲ buttons for the temperature setting. (this is the setting for the filter sign lighting time.)**
   At this time, be sure to write down the setting data displayed.
2. Change the CODE No. (DN) by pushing ▼ / ▲ buttons for the temperature setting.
   Similarly, be sure to write down the setting data displayed.
3. Repeat the step 2-2 to set the other settings in the same way and write down the setting data as shown in the table 1 (example).
   * The CODE No. (DN) are ranged from “ 01 ” to “ FE ”. The CODE No. (DN) may skip.

CODE No. required at least

DN	Contents
10	Type
11	Indoor unit capacity
12	System address
13	Indoor unit address
14	Group address

1. The Code No. for the Indoor unit type and Indoor unit capacity are required to set the rotation number setting of the fan.
2. If the system/indoor/group addresses are different from those before replacement, the auto-address setting mode starts and the manual resetting may be required again.
   (when the multiple units group operation including twin system.)

Step3 After writing down all setting data, push [ON/OFF] button to return to the normal stop status.
(It takes approx. 1 min until the remote controller operation is available again.)

[2] P.C. Board for indoor unit servicing replacement procedures (e.g. MCC-1643)

Step1 Replace the P.C. board to the P.C. board for indoor unit servicing.
At this time, perform the same setting of the jumper wire (J01, J08, J09) setting (cut), switch SW501, (short-circuit) connector CN34 as the setting of the P.C. board before replacement.

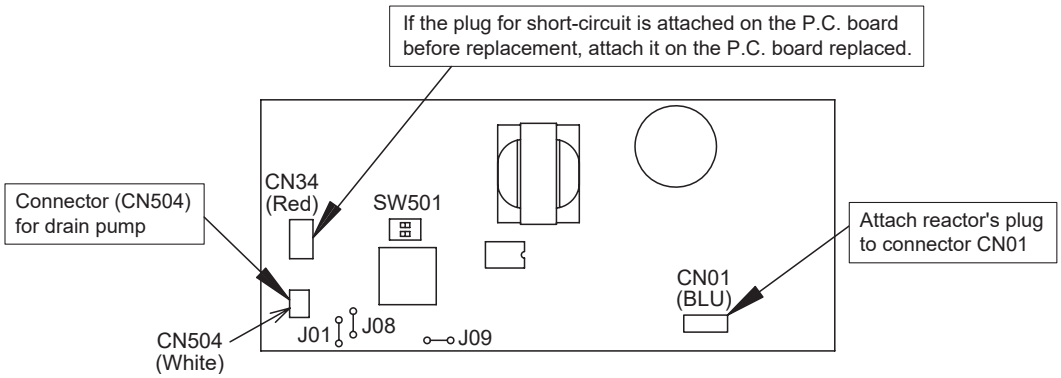

Step2 It is necessary to set indoor unit to be exchanged: Remote controller = 1 : 1
Based upon the system configuration, turn on power of the indoor unit with one of the following items.

1) Single (Individual) operation. Turn on power of the indoor units and proceed to [3].
2) Group operation
   A) In case that power of the exchanged indoor unit only can be turned on
      Turn on power of the exchanger indoor unit only and proceed to [3].
   B) In case that power of the indoor units cannot be turned on individually (Case 1)
      a) Remove temporarily the group wire connected to the terminal blocks A and B of the indoor unit.
      b) After connecting the remote controller wire only to the removed terminal block, turn on power of the indoor units and proceed to [3].
         * When the above methods cannot be used, follow to the two cases below.
   C) In case that power of the indoor units cannot be turned in individually (Case 2)
      a) Remove all CN41 connectors of the indoor units in the same group except those of the exchanged indoor unit.
      b) Turn on power of the indoor units and proceed to [3].
         * After [3] operation has finished, be sure to return the temporarily removed group wire or CN41 connector to the original connection.

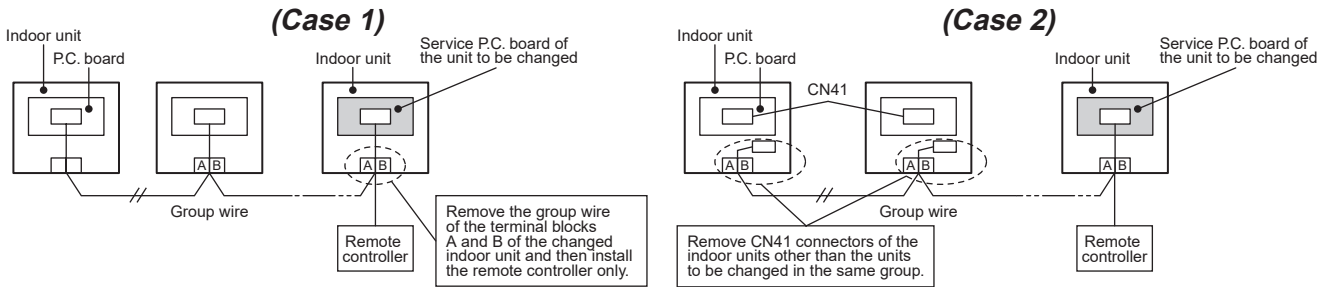

[3] Writing the setting data to EEPROM

The settings stored in the EEPROM of the P.C. board for indoor unit servicing are the factory-set values.

<RBC-ASCU11-✱>

Step 1 Push and hold the [menu + ▽] buttons at same time for more than 10 seconds.

* When the group operation control is performed, the unit No. displayed for the first time is the header unit No.
At this time, the Code No. (DN) shows “10”. Also, the fan of the indoor unit selected starts its operation and the swing operation also starts if it has the louvers.

Step 2 Every time when the [▽ or △] button is pushed, the indoor unit No. in the group control operation are displayed in order.
(The settings stored in the EEPROM of the P.C. board for indoor unit servicing are the factory-set values.)
Specify the indoor unit No. with its P.C. board replaced to the P.C. board for indoor unit servicing.
(You cannot perform this operation if “ALL” is displayed.)

Step 3 Select the Code No. (DN) can be selected by pushing the [▽ or △] [•¤ or •¢] button.

• Set the indoor unit type and capacity.
The factory-set values shall be written to the EEPROM by changing the type and capacity.

1. Push the [menu] button to make Code No. flash. And set the Code No. (DN) to10 .
2. Push the [menu] button to make SET DATA flash. And select the type by pushing the buttons.
(1-way Cassette Type is set to “0003”. Refer to table 2)
3. Push [OFF timer] button.
(The changed data is set.)
4. Change the Code No. (DN) to”11” by pushing the [▽ or △] buttons.
5. Select the capacity by pushing the [▽ or △] buttons.
(For example, 0031 Type is set to “0044”. Refer to table 3)
6. Push [OFF timer] button.
(The changed data is set.)

Step 4 Write the on-site setting data to the EEPROM, such as address setting, etc. Perform the steps 1 and 2 above again.

Step 5 Change the Code No. (DN) to “01” by pushing the [▽ or △] buttons.
(this is the setting for the filter sign lighting time.)

Step 6 Check the setting data displayed at this time with the setting data put down in [1].

1. If the setting data is different, modify the setting data by pushing the [▽ or △] buttons to the data put down in [1].
2. If the data is the same, proceed to next step.

Step 7 Change the Code No. (DN) by pushing the [▽ or △] buttons.
As described above, check the setting data and modify to the data put down in [1].

Step 8 Repeat the steps 6 and 7.

Step 9 After the setting completes, push the [ON/OFF] button to return to the normal stop status.
(It takes approx. 1 min until the remote controller operation is available again.)

<RBC-AMT∗∗∗>

Step 1 Push SET , CL and TEST buttons on the remote controller simultaneously for more than 4 seconds.

* In the group control operation, the unit No. displayed for the first time is the header unit No.. At this time, the CODE No. (DN) shows " 10 ". Also, the fan of the indoor unit selected starts its operation and the swing operation starts if it has the louvers.
(The unit No. " ALL " is displayed if the auto-address setting mode is interrupted in [2] step 2 a))

Step 2 Every time when UNIT LOUVER (left side button) button is pushed, the indoor unit No. in the group control operation are displayed in order.
(The settings stored in the EEPROM of the P.C. board for indoor unit servicing are the factory-set values.)
Specify the indoor unit No. with its P.C. board replaced to the P.C. board for indoor unit servicing.
(You cannot perform this operation if "ALL " is displayed.)

Step 3 Select the CODE No. (DN) can be selected by pushing the ▼ / ▲ button for the temperature setting.

• Set the indoor unit type and capacity.
The factory-set values shall be written to the EEPROM by changing the type and capacity.

1. Set the CODE No. (DN) to 10 . (without change)
2. Select the type by pushing ▼ / ▲ buttons for the timer setting.
(1-way Cassette Type is set to "0003 ". Refer to table 2)
3. Push SET button.
(The operation completes if the setting data is displayed.)
4. Change the CODE No. (DN) to " 11 " by pushing ▼ / ▲ buttons for the temperature setting.
5. Select the capacity by pushing ▼ / ▲ buttons for the timer setting.
(For example, 0031 Type is set to " 0044 ". Refer to table 3)
6. Push SET button.
(The setting completes if the setting data are displayed.)

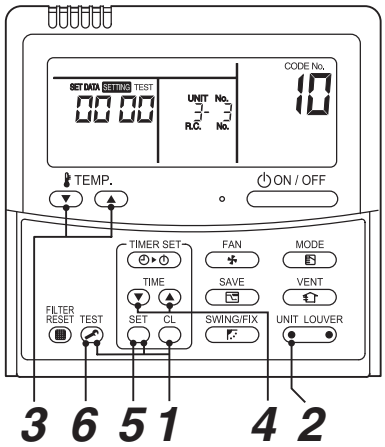

Step 4 Write the on-site setting data to the EEPROM, such as address setting, etc. Perform the steps 1 and 2 above again.

Step 5 Change the CODE No. (DN) to " 01 " by pushing ▼ / ▲ buttons for the temperature setting.
(this is the setting for the filter sign lighting time.)

Step 6 Check the setting data displayed at this time with the setting data put down in [1].

1. If the setting data is different, modify the setting data by pushing ▼ / ▲ buttons for the timer setting to the data put down in [1].
The operation completes if the setting data is displayed.
2. If the data is the same, proceed to next step.

Step 7 Change the CODE No. (DN) by pushing ▼ / ▲ buttons for the temperature setting.
As described above, check the setting data and modify to the data put down in [1].

Step 8 Repeat the steps 6 and 7.

Step 9 After the setting completes, push TEST button to return to the normal stop status.
(It takes approx. 1 min until the remote controller operation is available again.)

* The CODE No. (DN) are ranged from " 01 " to " FE ". The CODE No. (DN) is not limited to be serial No.
Even after modifying the data wrongly and pushing SET button, it is possible to return to the data before modification by pushing CL button if the CODE No. (DN) is not changed.

Table 1. Setting data (CODE No. table (example))

CODE No. (DN)	Item	Setting data	Factory-set value
01	Filter sign lighting time		Depending on Type
02	Filter pollution level		0000: standard
03	Central control address		0099: Not determined
06	Heating suction temperature shift		Depending on Type
0F	Cooling only		0000: Heat pump
10	Type		Depending on model type
11	Indoor unit capacity		Depending on capacity type
12	System address		0099: Not determined
13	Indoor unit address		0099: Not determined
14	Group address		0099: Not determined
19	Louver type (wind direction adjustment)		Depending on Type.
1E	Temperature range of cooling/heating automatic SW control point		0003: 3 deg (Ts ±1.5)
28	Power failure automatic recovery		0000: None
2b	Thermostat output SW (T10 ③)		0000: Thermostat ON
31	Ventilation fan (standalone)		0000: Not available
32	Sensor SW (Selection of static pressure)		0000: Indoor unit sensor
5d	High ceiling SW		0000: Standard
60	Timer setting (wired remote controller)		0000: Available
77	Dual set point		0000: Unavailable
b3	Soft cooling		0001: Available
b5	Occupancy sensor: Provided/None		0000: None
b6	Occupancy sensor: Enable/Invalid (Judgment time of absence)		0002: Enable (60 min.)
b7	Occupancy sensor: Operation at absent time		0000: Stand by
d0	Remote controller operation save function		0001: Enable
F0	Swing mode		0001: Standard
F1	Louver fixing position (Flap No. 1)		0000: Not fixed
F2	Louver fixing position (Flap No. 2)		0000: Not fixed
F3	Louver fixing position (Flap No. 3)		0000: Not fixed
F4	Louver fixing position (Flap No. 4)		0000: Not fixed
F6	Presence of Application control kit		0000: None
Fd	Priority operation mode (FS unit)		0000: Heating
FE	FS unit address		0099: Unfixed

Table 2. Type: Code No.10

Setting data	Type	Model name
0003	1-Way cassette Type	MMU-UP****YHP*

Table 3. Indoor unit capacity: Code No.11

Setting data	Model
0000*	Invalid
0007	0151 type
0009	0181 type
0011	0241 type
0012	0271 type

11. DETACHMENTS

No.	Part name	Procedure	Remarks
①	Air inlet grill	**CAUTION** Be sure to put on the gloves and long-sleeved shirt at disassembling work; otherwise an injury will be caused by a part, etc. **1. Detachment** 1) Stop operation of the air conditioner and then turn off switch of the breaker. 2) Loosen the screw on hook lock grille both side. 3) Slide the hook lock grille on air inlet grille in the direction of arrow 1. (Fig. 1) 4) Push the center hook of air inlet grille in the direction of arrow 2. and open the grille. (Fig. 1) 5) Release the safety strap hook from the air inlet grille. • **Do not remove the safety strap screw on the ceiling panel side.** 6) Remove the hinges on the air inlet grille from ceiling panel by slide the grille fixture (3 positions) in direction of arrow 3 then pull out the air inlet grille. (Fig. 2) **2. Attachment** 1) Attach the air inlet grille by reversing the procedure of its removal. 2) Be sure to attach the safety strap to air inlet grille.	(Fig. 1) 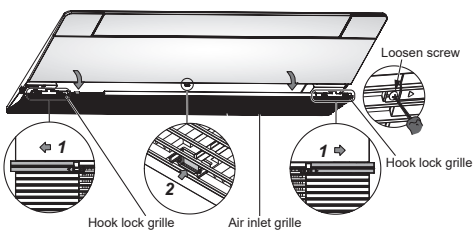 (Fig. 2) 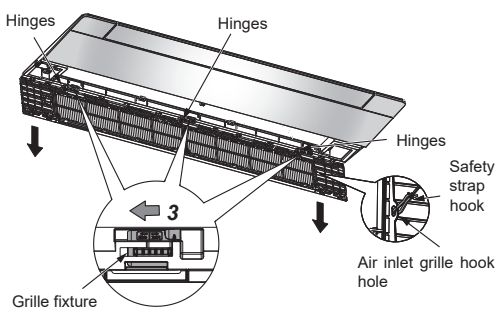
②	Electric parts cover	**1. Detachment** 1) Carry out work of item 1 of ① 2) Remove the fixing screw of the electric parts cover, and detach the electric parts cover by slide. (The electric parts cover is clamped onto the hinge.) (Fig. 3) **2. Attachment** 1) Attach the electric parts cover by slide and tighten the screw of the electric parts cover. 2) Tighten the fixing screw for fix electric parts cover.	(Fig. 3) 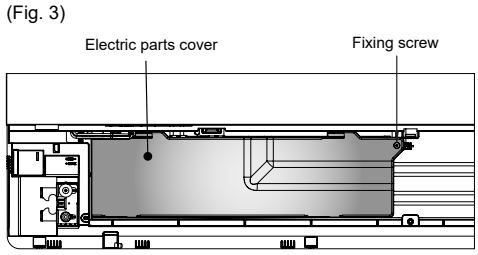

No.	Part name	Procedure	Remarks
③	Control P.C.board	**1. Detachment** 1) Carry out work of item 1 of ① and item 1 of ②. 2) Remove connectors which are connected from the control P.C. board to the other parts and then remove wiring from the clamp. CN510 : Louver motor (20P, White) CN34 : Float switch (3P, Red) CN504 : Drain pump (2P, White) CN100 : TC1 sensor (3P, Brown) CN101 : TC2 sensor (2P, Black) CN102 : TCJ sensor (2P, Red) CN210 : Fan motor (7P, White) CN82 : PMV (6P, Blue) **Note :** Unlock the lock of the housing part and then remove the connector. 3) Unlock the locks of the card edge spacer (4 positions) and then remove the control P.C. board. **2. Attachment** 1) Fix the control P.C. board to the card edge spacer. (4 positions) 2) Connect the connector removed in item 1 as before and then fix the wiring with the clamp. 3) Following to work of item 2 of ② and 2 of ① mount the electric parts box cover and the air inlet grille as before.	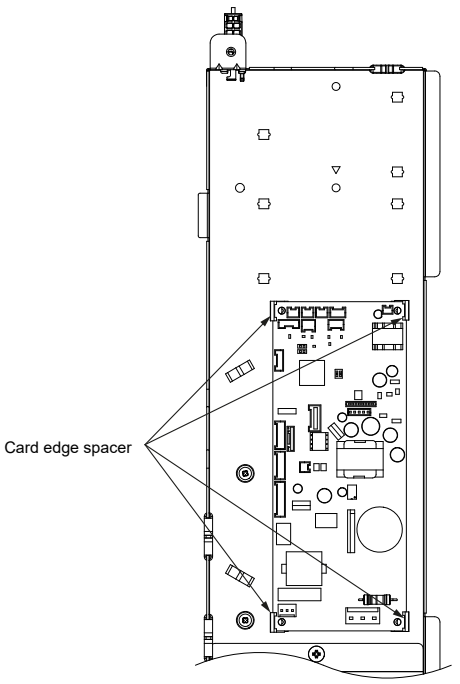
④	Adjust corner cap	**1. Detachment** 1) Pull the edge of the adjust corner cap in the direction of arrow, adjust corner cap will be release from ceiling panel. (Fig. 4) **2. Attachment** 1) Hook the strap of the adjust corner cap securely to the pin. 2) Insert the two claws A of the adjust corner cap into the rectangular holes of the ceiling panel in the direction of arrow. (Fig. 5) 3) Push the adjust corner cap so that the two claws B on the back of the cap are fitted. **CAUTION** Press the two claws B of the adjust corner cap firmly as far as they will go, and then check that the adjust corner cap is closely attached. Failure to do so may result in water leakage.	(Fig. 4) 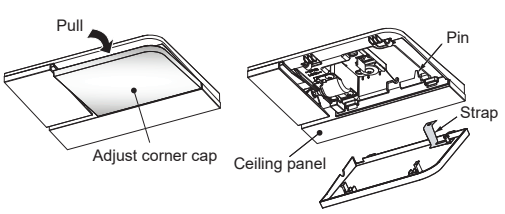 (Fig. 5) 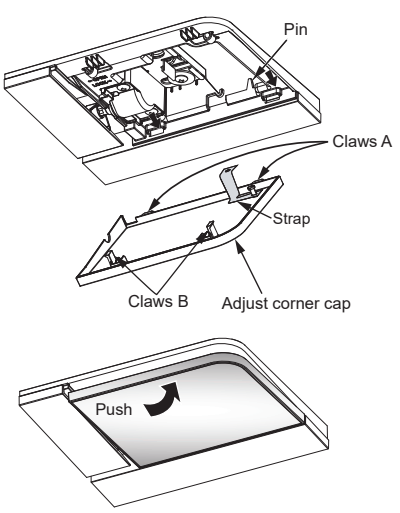

No.	Part name	Procedure	Remarks
⑤	Louver	**1. Detachment** 1) Open the louver until the end (1) then slide the louver in direction of arrow 2 until the end. (Fig. 6) 2) Pull the louver shaft A off from the shaft holder of ceiling panel then slide the louver to opposite side (3) and pull another shaft off. (Fig. 6) 3) Close the louver (4) then pull the louver off from the louver motor both side in direction of arrow 5 (1 side at a time) (Fig. 7) **2. Attachment** 1) Insert the louver hole into the louver motor shaft in direction of arrow 1 (1 side at a time) (Fig. 8) 2) Open the louver (2) and slide in direction of arrow 3 until the end then push the louver shaft A into the shaft holder of ceiling panel. (Fig. 9) 3) Slide the louver to opposite direction (4) then push another shaft to shaft holder (Fig. 9) ⚠ **CAUTION** **Make sure that the plus shape of louver motor shaft completely matches with the plus shape of louver hole.** 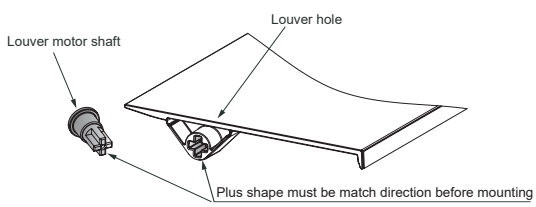 	(Fig. 6) 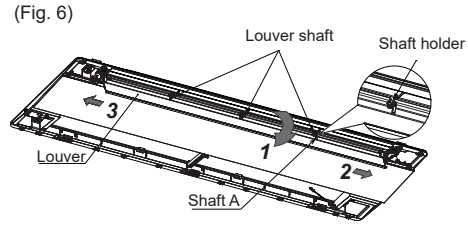 (Fig. 7) 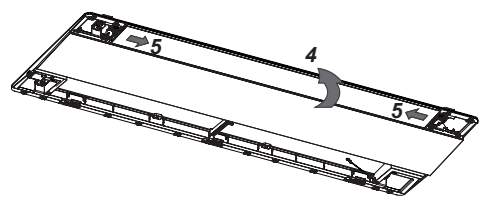 (Fig. 8) 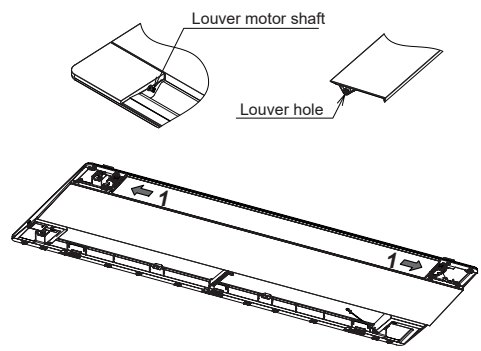 (Fig. 9) 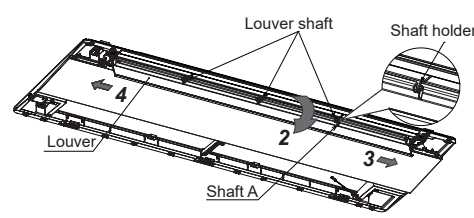

No.	Part name	Procedure	Remarks
⑥	Ceiling panel	**1. Detachment** 1) Carry out work of item 1 of ②, item 1 of ④ and Item 1 of ⑤ . 2) Remove the flap connector (CN510, White, 20P) connected to the control P.C.board and then remove the lead wire from the clamp. (Fig.10) 3) Loosen the panel fixing screw (black color) from the ceiling panel on the air inlet side and outlet side. (Fig. 11, Fig. 12 and Fig. 13) 4) Loosen the four panel fixing screws. Then slide the panel fixing bracket in the direction of arrow (open side). (Fig.14) Repeat this procedure for the four panel fixing brackets. 5) Detach the front panel hole from the panel fixing screw. (Fig. 15) 6) Remove the two movable hooks at the inside of the ceiling panel from the rectangular holes of the indoor unit. (Fig. 16) **2. Attachment** 1) Attach the ceiling panel by reversing the procedure of detaching. 2) Check that the ceiling panel is in close contact with the ceiling. • Make sure that there is no gap between indoor unit and ceiling panel and between ceiling panel and bottom of the ceiling. ⚠ **CAUTION** • Insufficient tightening of the screws may result in the following problems. Tighten the screws securely. 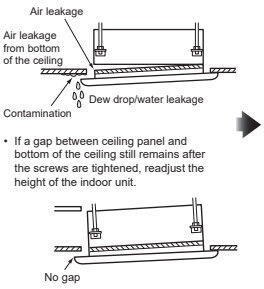 • If a gap between ceiling panel and bottom of the ceiling still remains after the screws are tightened, readjust the height of the indoor unit. The height of the indoor unit can be adjusted from the corner holes of the ceiling panel without detaching the panel, provided that the levelness of the indoor unit and the drain pipe are not affected. 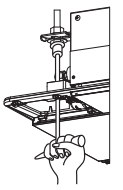 After the adjustment of height, tighten the nuts of the indoor unit securely.	(Fig. 10) 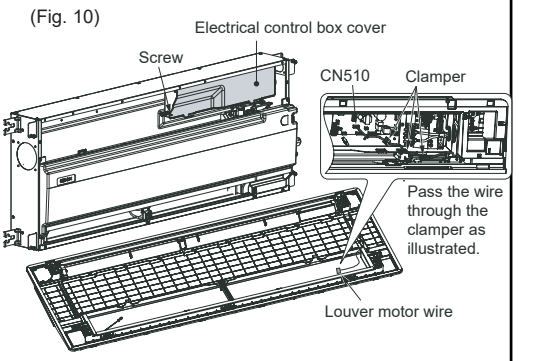 Wire Connection (For illustrative purpose, the orientation of the indoor unit is not the actual orientation.) (Fig. 11) 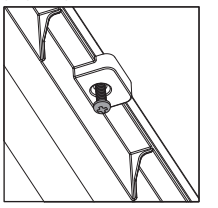 Loosen the panel fixing screw (black color) on air inlet side (2 position) (Fig. 12) 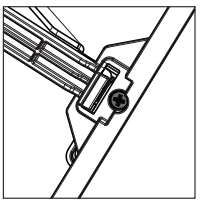 Loosen the panel fixing screw (black color) on center hook of air inlet side. (Fig. 13) 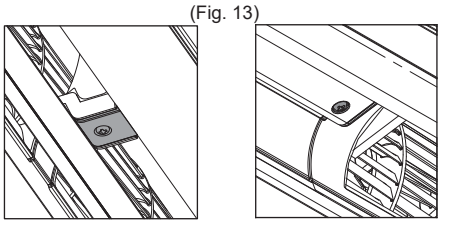 Loosen the panel fixing screw (black color) on air outlet side. (2 Positions) (Fig. 14) 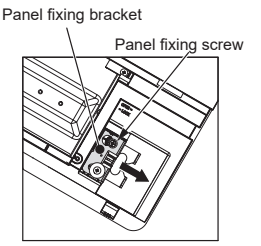 Loosen the panel fixing screw then slide the panel fixing bracket to the open side (Fig. 15) 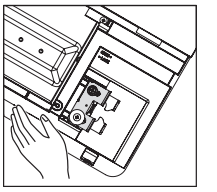 Detach the ceiling panel hole from the panel fixing screw (Fig. 16) 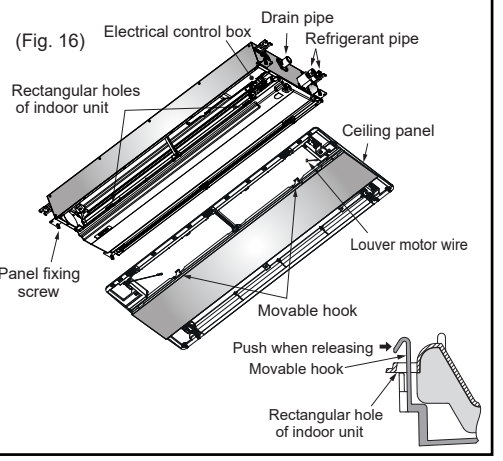

No.	Part name	Procedure	Remarks
⑦	Drain pan	**1. Detachment** 1) Carry out work of item 1 of ⑥. 2) Remove the cap drain and then drain the water accumulated in the drain pan. (Fig. 17) * When taking off the cap drain, be sure to prepare a bucket, etc. for spilled water. 3) Loosen the fixing screw (Ø4 x 10, 7 pcs.) and then remove the drain pan. (Fig. 18) **2. Attachment** 1) Tighten the fixing screw to the drain pan with the cabinet. 2) Firmly insert cap drain to drain pan.	(Fig. 17) 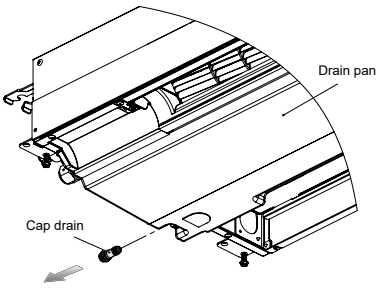 (Fig. 18) 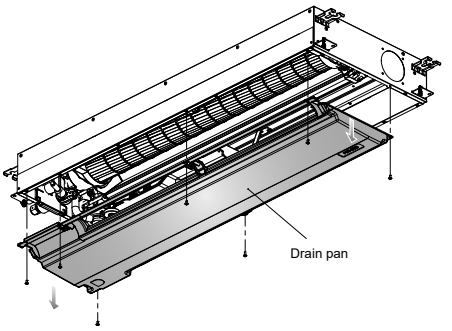
⑧	Drain pump	**1. Detachment** 1) Carry out work of item 1 of ⑦. 2) Remove the drain pump connector (CN504, White, 2P) connected to the control P.C. board and then remove the lead wire from the clamp. 3) Remove the band hose from the drain hose in the direction of arrow. (Fig. 19) 4) Remove the drain hose from drain pump in the direction of arrow. (Fig. 20) 5) Loosen the fixing screw (Ø4 x 10, 3 pcs.) and then remove the drain pump from the pump fixture. (Fig. 21) **2. Attachment** 1) Tighten the fixing screw to the the drain pump with the pump fixture. 2) Insert the drain hose to the drain pump. **Note :** Insert the drain hose up to the end of the drain pump connecting part, apply band to the white mark position of the hose. 3) Connect the drain pump connector (CN504, White, 2P) to the control P.C. board and then fix it as before with the clamp.	(Fig. 19) 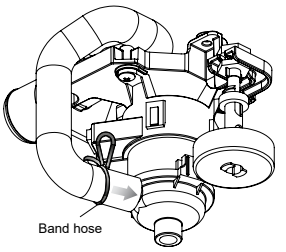 (Fig. 20) 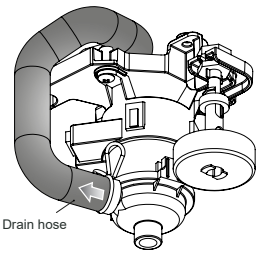 (Fig. 21) 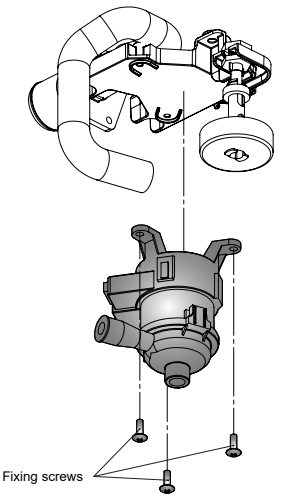

No.	Part name	Procedure	Remarks
⑨	Float switch	**1. Detachment** 1) Carry out work of item 1 of ⑦. 2) Remove the float switch connector (CN34, Red, 3P) connected to the control P.C. board and then remove the lead wire from the clamp. 3) Loosen the nut fixing float switch then float switch will be release. (Fig. 22) **2. Attachment** 1) Tighten the nut fixing float switch to the float switch with the pump fixture. 2) Connect the float switch connector (CN34, Red, 3P) to the control P.C. board and then fix it as before with the clamp.	(Fig. 22) 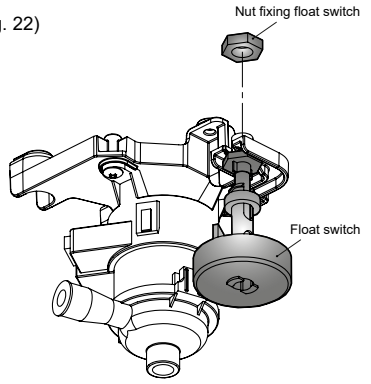
⑩	PMV coil	**1. Detachment** 1) Carry out work of item 1 of ⑦. 2) Remove the PMV coil connector (CN82, Blue, 6P) connected to the control P.C. board and then remove the lead wire from the clamp. 3) Turn the PMV coil slightly follow the direction of arrow (Fig. 23), and then remove the PMV coil follow the direction of arrow (Fig. 24) **2. Attachment** 1) Attach the PMV coil as original. **Note :** • Check the direction of the PMV coil. • Check the claw holes in the PMV coil. are securely placed into four clows on the PMV body. • Chcek position of the lock part on the binding band and the lead wire. 2) Connect the PMV coil connector (CN82, Blue, 6P) to the control P.C. board and then fix it as before with the clamp. 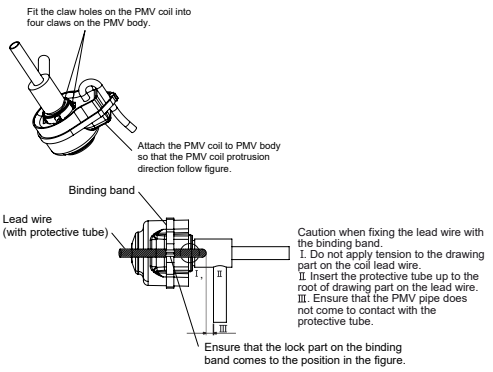 	(Fig. 23) 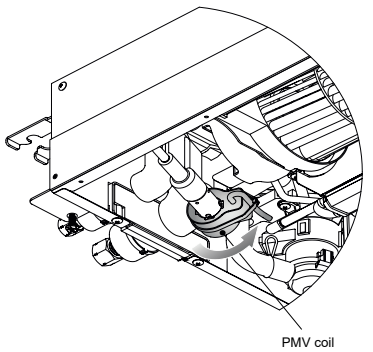 (Fig. 24) 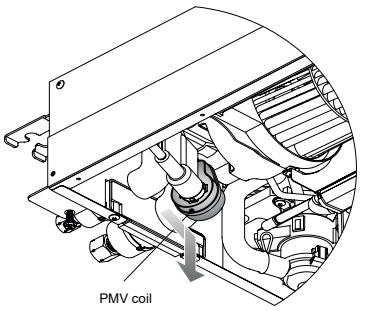
⑪	Cover pipe	**1. Detachment** 1) Carry out work of item 1 of ⑦. 2) Loosen the fixing screw (Ø4 x 10, 2 pcs.) and then remove the cover pipe. (Fig. 25) **2. Attachment** 1) Tighten the fixing screw to the cover pipe for fix with the side cabinet.	(Fig. 25) 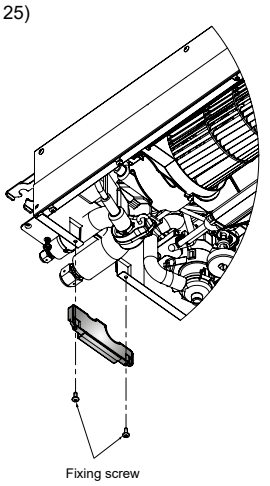

No.	Part name	Procedure	Remarks
⑫	Fan motor and cross flow fan	**1. Detachment** 1) Carry out work of item 1 of ⑦ and item 1 of ⑪. 2) Remove the fan motor connector (CN210, White, 7P) connected to the control P.C. board and then remove the lead wire from the clamp. 3) Loosen the fixing screw (Ø4 x 10, 2 pcs.) of heat exchanger. (Fig. 26) 4) Loosen the fixing screw (Ø4 x 10, 2 pcs.) of cover motor and then remove the cover motor. (Fig. 27) 5) Loosen the set screw of the cross flow fan by hexagonal wrench. (Fig. 28) 6) Loosen the fixing screw (Ø4 x 10, 2 pcs.) of fan motor band and then remove the fan motor and the cross flow fan.(Fig. 29) **2. Attachment** 1) Check the type name of the fan motor. 2) Keep connector position and arrange the fan motor wire following (Fig. 30) <u>For ICF-340-30-6A, ICF-280-61-3</u> (Fig. 30) 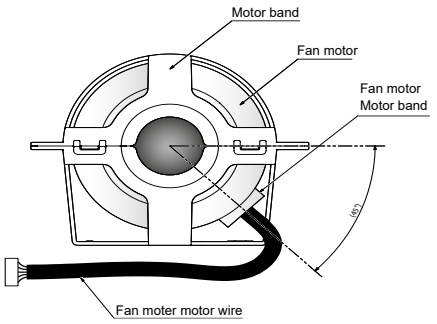 3) Install the fan motor and the cross flow fan into the original position and then tighten the fixing screw to the fan motor band. 4) Keep distance between main unit and cross flow fan as (Fig. 31) and then tighten set screw to the original position. (Fig. 31) 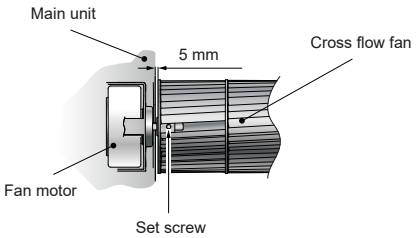 5) Tighten the fixing screw to the cover motor. 6) Tighten the fixing screw to the heat exchanger. 7) Connect the fan motor connector (CN210, White, 7P) to the control P.C. board and then fix it as before with the clamp.	(Fig. 26) 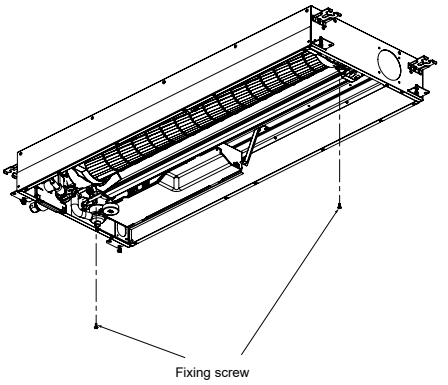 (Fig. 27) 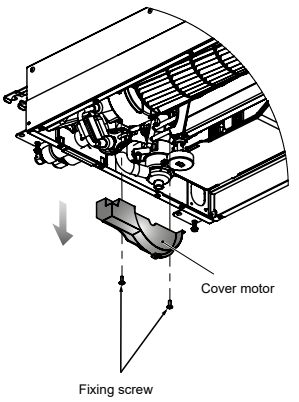 (Fig. 28) 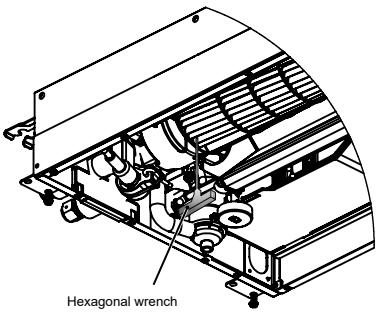 (Fig. 29) 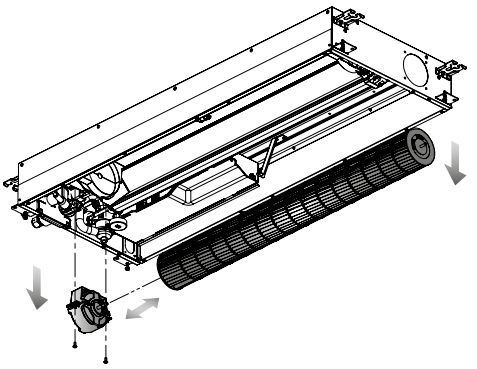

No.	Part name	Procedure	Remarks
⑬	Bearing	**1. Detachment** 1) Carry out work of item 1 of ⑫. 2) Push the bearing to inside hole of base bearing follow direction of arrow (Fig. 32) 3) Pull the bearing follow direction of arrow (Fig. 33) **2. Attachment** 1) Mounting bearing to the original position.	(Fig. 32) 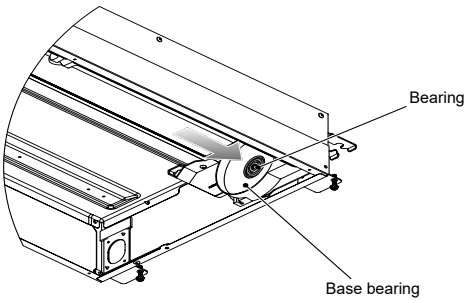 (Fig. 33) 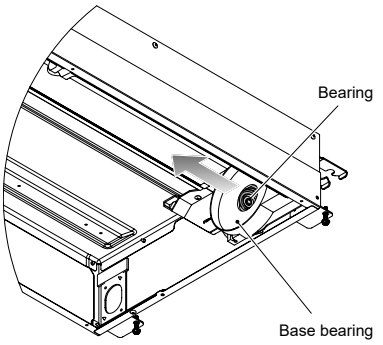
⑭	Heat exchanger	**1. Detachment** 1) Recover the refrigerant gas. 2) Remove the refrigerant pipe at indoor unit side. 3) Carry out work of item 1 of ⑦ and item 1 of ⑪. 4) Remove the heat exchanger sensor (CN100 : TC1 sensor, Brown, 3P) (CN101 : TC2 sensor, Black, 2P) and (CN102 : TCJ sensor, Red, 2P) connected to the control P.C. board and then remove the lead wire from the clamp. 5) Loosen the earth screw and then remove the earth lead wire from the heat exchanger. 6) Loosen the fixing screw (Ø4 x 10, 4 pcs.) and then remove the heat exchanger. (Fig. 32) **2. Attachment** 1) Tighten the fixing screw to the heat exchanger. 2) Mount the earth lead wire with the earth screw to the heat exchanger. 3) Connect the heat exchanger sensor (TC1, TC2 and TCJ) to the control P.C. board and then fix it as before with the clamp.	(Fig. 34) 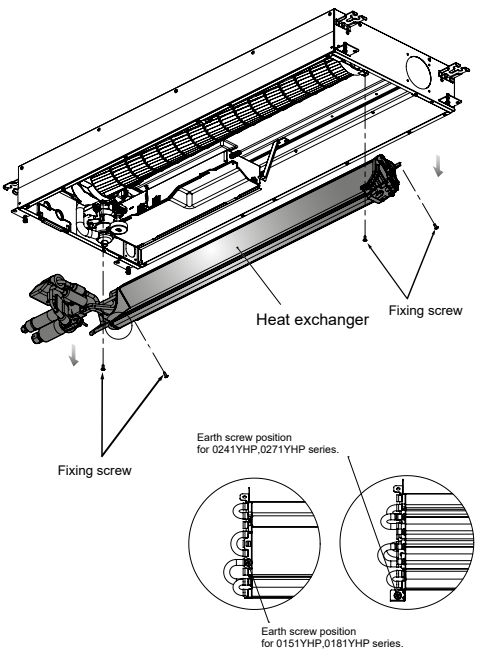

12. EXPLODED VIEWS AND PARTS LIST

1-way cassette type

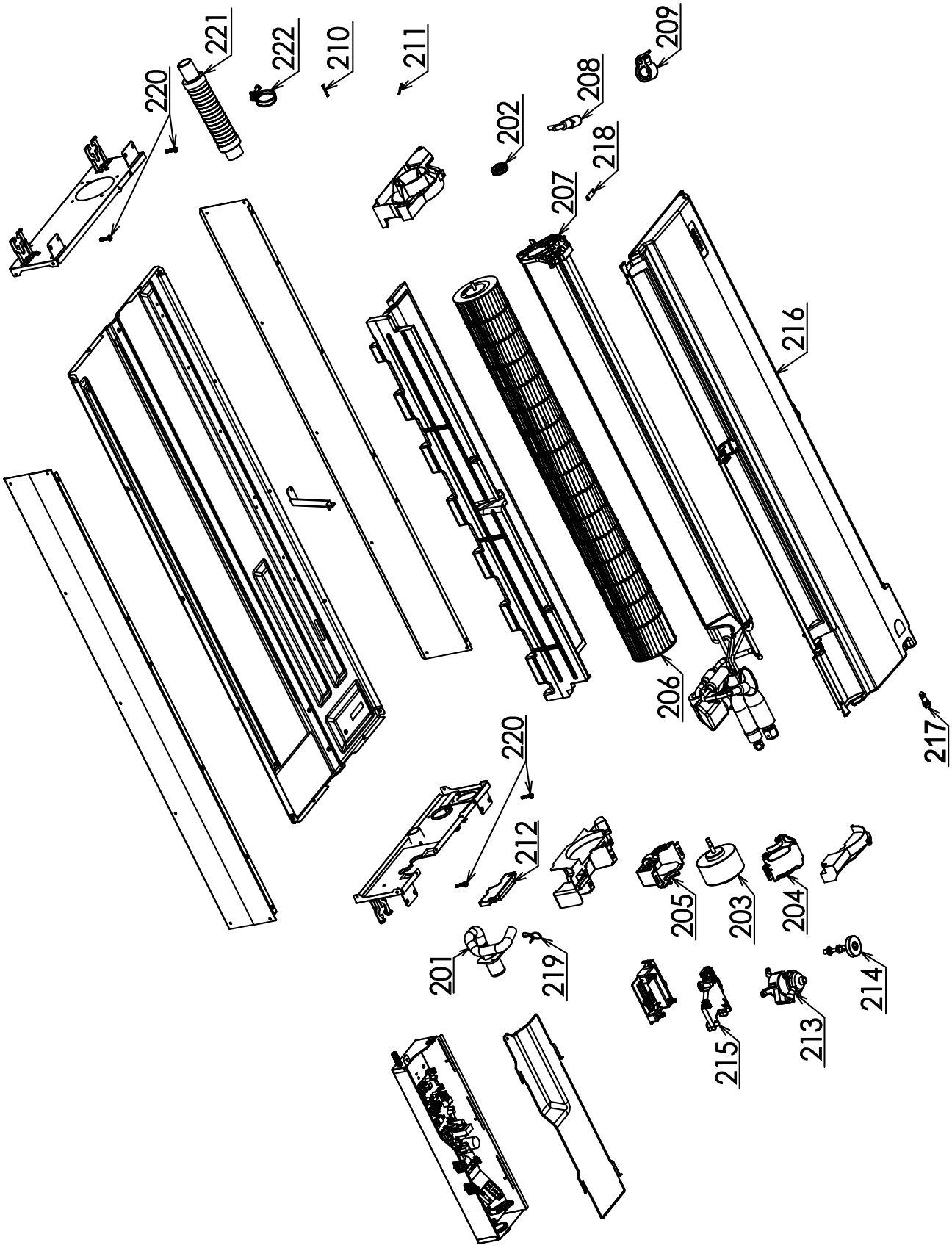

Location No.	Part No.	Description	Model name MMU-UP			
			0151 YHP-E(TR)	0181 YHP-E(TR)	0241 YHP-E(TR)	0271 YHP-E(TR)
201	43T70327	DRAIN HOSE ASSY	1	1	1	1
202	43T22312	BEARING ASSY, MOLD	1	1	1	1
203	43T21515	MOTOR-FAN	1	1	-	-
203	43T21532	MOTOR-FAN	-	-	1	1
204	43T39428	MOTOR BAND DOWN	1	1	-	-
204	43T39453	MOTOR BAND DOWN	-	-	1	1
205	43T39429	MOTOR BAND UP	1	1	-	-
205	43T39454	MOTOR BAND UP	-	-	1	1
206	43T20368	CROSS FLOW FAN ASSY	1	1	1	1
207	43T44790	REFRIGERATION CYCLE ASSY	1	1	-	-
207	43T44791	REFRIGERATION CYCLE ASSY	-	-	1	1
208	43T46517	BODY, PMV	1	1	1	1
209	43T46515	COIL, PMV	1	1	1	1
210	43T19321	FIX-P-SENSOR	1	1	1	1
211	43T19333	HOLDER, SENSOR	2	2	2	2
212	43T49389	PIPE COVER ASSY	1	1	1	1
213	43T77303	PUMP ASSY	1	1	1	1
214	43T51317	FLOAT SWITCH ASSY	1	1	1	1
215	43T07341	PUMP FIXTURE	1	1	1	1
216	43T72392	DRAIN PAN ASSY	1	1	1	1
217	43T79322	DRAIN CAP	1	1	1	1
218	43T07326	SCREW PLATE	3	3	3	3
219	43T83307	BAND, HOSE	1	1	1	1
220	43T97315	SCREW, FIX PANEL	4	4	4	4
221	43T70326	HOSE, DRAIN	1	1	1	1
222	43T83311	BAND, HOSE	1	1	1	1

Electric Parts

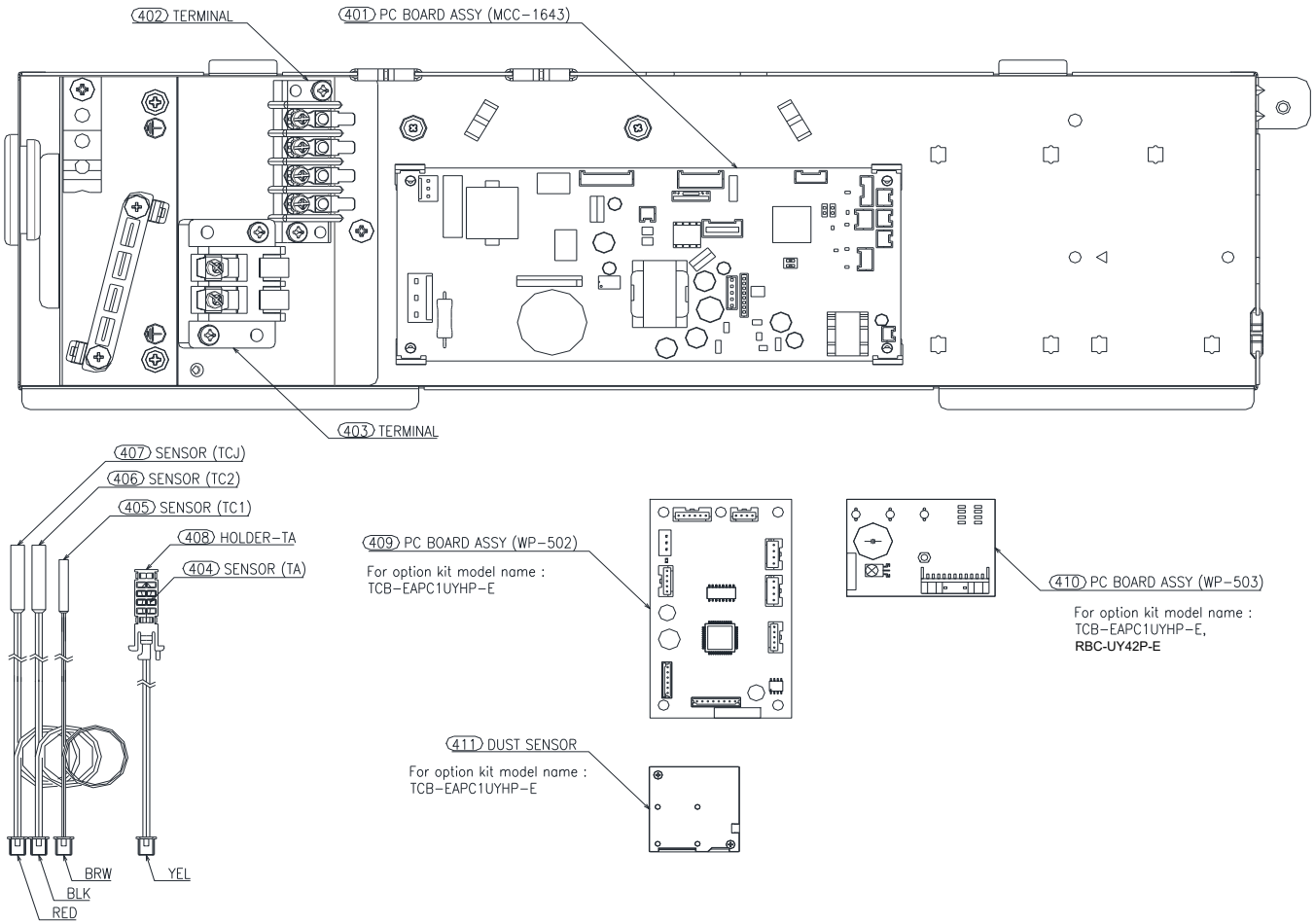

Location No.	Part No.	Description	Model name MMU-UP			
			0151 YHP-E(TR)	0181 YHP-E(TR)	0241 YHP-E(TR)	0271 YHP-E(TR)
401	43T6W910	PC BOARD ASSY (MCC-1643)	1	1	1	1
402	43T60362	TERMINAL	1	1	1	1
403	43T60078	TERMIMAL BLOCK	1	1	1	1
404	43T50389	TA-SENSOR	1	1	1	1
405	43T50477	TC-SENSOR (TC1)	1	1	1	1
406	43T50387	TC-SENSOR (TC2)	1	1	1	1
407	43T50386	TCJ SENSOR (RED)	1	1	1	1
408	43T50351	HOLDER-TA	1	1	1	1
409	43T6W911	PC BOARD ASSY (WP-502)	1	1	1	1
410	43T6W912	PC BOARD ASSY (WP-503)	1	1	1	1
411	43T50408	DUST SENSOR	1	1	1	1

RBC-UY42P-E

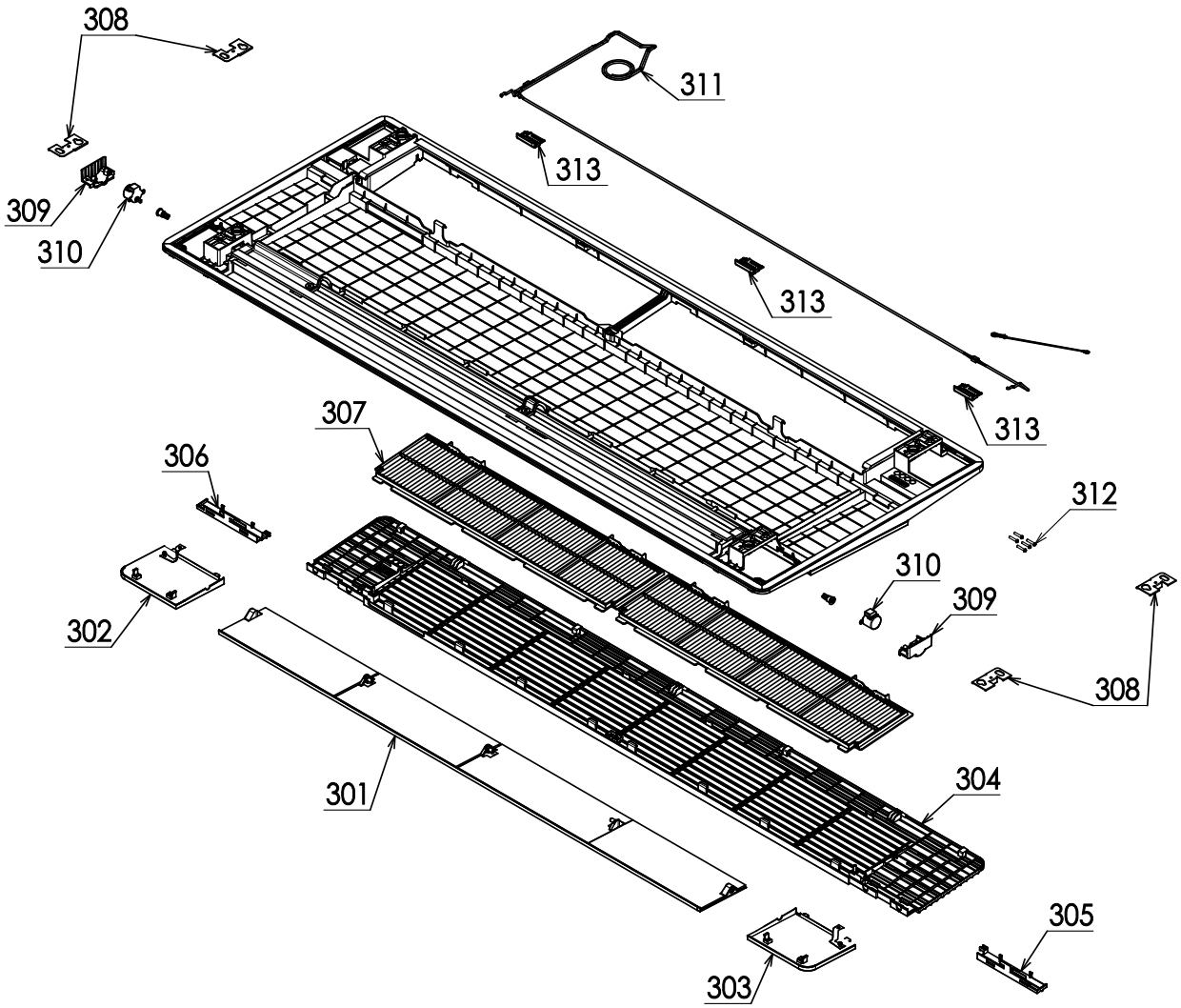

Location No.	Part No.	Description	RBC-UY42P-E
301	43T22397	HORIZONTAL LOUVER ASSY	1
302	43T01334	PANEL COVER ASSY	1
303	43T01335	PANEL COVER ASSY	1
304	43T09632	GRILLE ASSY	1
305	43T19381	GRILLE HOOK RIGHT	1
306	43T19382	GRILLE HOOK LEFT	1
307	43T80370	AIR FILTER	2
308	43T07327	PANEL FIXED PLATE	4
309	43T07328	LOUVER MOTOR COVER	2
310	43T21478	MOTOR; STEPPING	2
311	43T60593	LEAD-MOTOR	1
312	43T97331	SCREW FIX PANEL	5
313	43T07342	GRILLE FIXTURE	3

Toshiba Carrier (Thailand) Co., Ltd.

144/9 MOO 5, BANGKADI INDUSTRIAL PARK, TIVANON ROAD, TAMBOL BANGKADI,
AMPHUR MUANG, PATHUMTHANI 12000, THAILAND.