TOSHIBA

TCTC-E22-LC008-4

Engineering Data Book

Digital Inverter Classic R32 (DIC)
Light Commercial System

Indoor Units

4-way cassette

RAV-HM561UTP-E / TR
RAV-HM801UTP-E / TR
RAV-HM1101UTP-E / TR
RAV-HM1401UTP-E / TR
RAV-HM1601UTP-E / TR

Standard duct

RAV-HM561BTP-E / TR
RAV-HM801BTP-E / TR
RAV-HM1101BTP-E / TR
RAV-HM1401BTP-E / TR
RAV-HM1601BTP-E / TR

High wall

RAV-HM561KRTP-E / TR
RAV-HM801KRTP-E / TR
RAV-HM1101KRTP-E / TR

Outdoor Units (Single phase)

RAV-GV561ATP-E / TR
RAV-GV801ATP-E / TR
RAV-GV1101ATP-E / TR
RAV-GV1401ATP-E / TR
RAV-GV1601ATP-E1 / TR

Contents

1. Line up

Outdoor unit

Model name	RAV-GV561ATP-E / TR RAV-GV801ATP-E / TR	RAV-GV1101ATP-E / TR	RAV-GV1401ATP-E / TR	RAV-GV1601ATP-E1 / TR
Appearance				

Indoor unit

Capacity Type		(kbtu/h) **	56	80	110	140	160
4-way Cassette		RAV-HM**1UTP-E / TR	56	80	110	140	160
Standard duct		RAV-HM**1BTP-E / TR	56	80	110	140	160
High wall		RAV-HM**1KRTP-E / TR	56	80	110	-	-

2. Indoor Units

2-1. 4-way Cassette Type

2-1-1. Specifications

2-1-2. Dimension

2-1-3. Wiring Diagrams

2-1-4. Sensible Capacity Table

2-1-5. Part Load Performance

2-1-6. Air Throw Distance Chart

2-1-7. Sound Characteristic (NC Curve)

2-1-8. Accesories

2-1-1. Specifications

4-way Cassette Type

Model		Indoor unit		RAV-	HM561UTP-E / TR	HM801UTP-E / TR	HM1101UTP-E / TR	HM1401UTP-E / TR	HM1601UTP-E / TR
		Outdoor unit		RAV-	GV561ATP-E / TR	GV801ATP-E / TR	GV1101ATP-E / TR	GV1401ATP-E / TR	GV1601ATP-E1 / TR
Cooling capacity		Rated		(kW)	5.0	6.7	9.5	11.5	13.0
		Min-Max		(kW)	1.5 - 5.6	1.5 - 8.0	3.0 - 11.2	3.0 - 12.0	3.0 - 14.0
Heating capacity		Rated		(kW)	5.3	7.0	10.0	11.9	13.5
		Min-Max		(kW)	1.5 - 6.3	1.5 - 9.0	3.0 - 13.0	3.0 - 16.0	3.0 -18.0
Power supply					1 phase 220V-240V/50Hz, 220V/60Hz				
Electrical characteristics	Cooling	Running current		(A)	7.42 - 6.80	10.31 - 9.45	14.76 - 13.53	21.50 - 19.80	25.10 - 23.00
		Power consumption		(kW)	1.60	2.20	3.15	4.60	5.40
		Power factor		(%)	98	97	97	97	98
		EER			3.13	3.05	3.02	2.50	2.41
		PdesignC		(kW)	5.0	6.7	9.5	11.5	13.0
		SEER	No.		6.20	6.00	6.00	5.10	5.90
			Grade (Lot10)		A++	A+	A+	A	-
	Heating	Running current		(A)	6.49 - 5.95	8.90 - 8.16	14.53 - 13.32	17.80 - 16.30	18.00 - 16.60
		Power consumption		(kW)	1.40	1.90	3.10	3.80	3.90
		Power factor		(%)	98	97	97	97	98
		COP			3.79	3.68	3.23	3.13	3.46
		PdesignH		(kW)	2.8	4.8	7.6	7.8	8.0
		SCOP	No.		4.20	4.15	4.00	3.90	4.20
			Grade (Lot10)		A+	A+	A+	A	-
Indoor unit									
Appearance		Main unit			Zinc hot dipping steel plate				
		Ceiling panel (Sold separately)	Model		Standard panel: RBC-U32PGP-E / Smart panel: RBC-U33P-E				
			Panel color		Standard panel : White (Munsell : 2.5GY9.0/0.5) / Smart panel : Gran White (Munsell : 5PB9/1)				
Outer dimension		Main unit	Height	(mm)	256		319		
			Width	(mm)	840				
			Depth	(mm)	840				
		Ceiling panel (Sold separately)	Height	(mm)	30				
			Width	(mm)	950				
			Depth	(mm)	950				
Total weight		Main unit		(kg)	20.0		24.0		
		Ceiling panel (Sold separately)		(kg)	4.0				
Fan unit		Fan			Turbo fan				
		Standard air flow	H/M/L	(m³/h)	1050/870/780	1230/960/810	2010/1440/1170	2100/1440/1230	2130/1500/1260
Air filter					Standard filter (Long life filter)				
Sound pressure level			H/M/L	(dB)	32/29/28	35/31/28	43/38/33	44/38/34	45/40/36
Sound power level			H/M/L	(dB)	47/44/43	50/46/43	58/53/48	59/53/49	60/55/51

*1 : The cooling capacities and electrical characteristics are measured under the conditions specified by JIS B 8615 based on the reference piping. The reference piping consists of 5 m of main piping and 2.5 m of branch piping connected with 0 meter height.

*2 : The sound level are measured in an anechoic chamber in accordance with JIS B 8616. Normally, the values measured in the actual operating environment become larger than the indicated values due to the effects of external sound.

Note :

Rated conditions Cooling : Indoor air temperature 27°C DB/19°C WB, Outdoor air temperature 35°C DB
Heating : Indoor air temperature 20°C DB, Outdoor air temperature 35°C DB

2-1-2. Dimension

RAV-HM561UTP-E / TR

Standard panel (RBC-U32PGP-E)

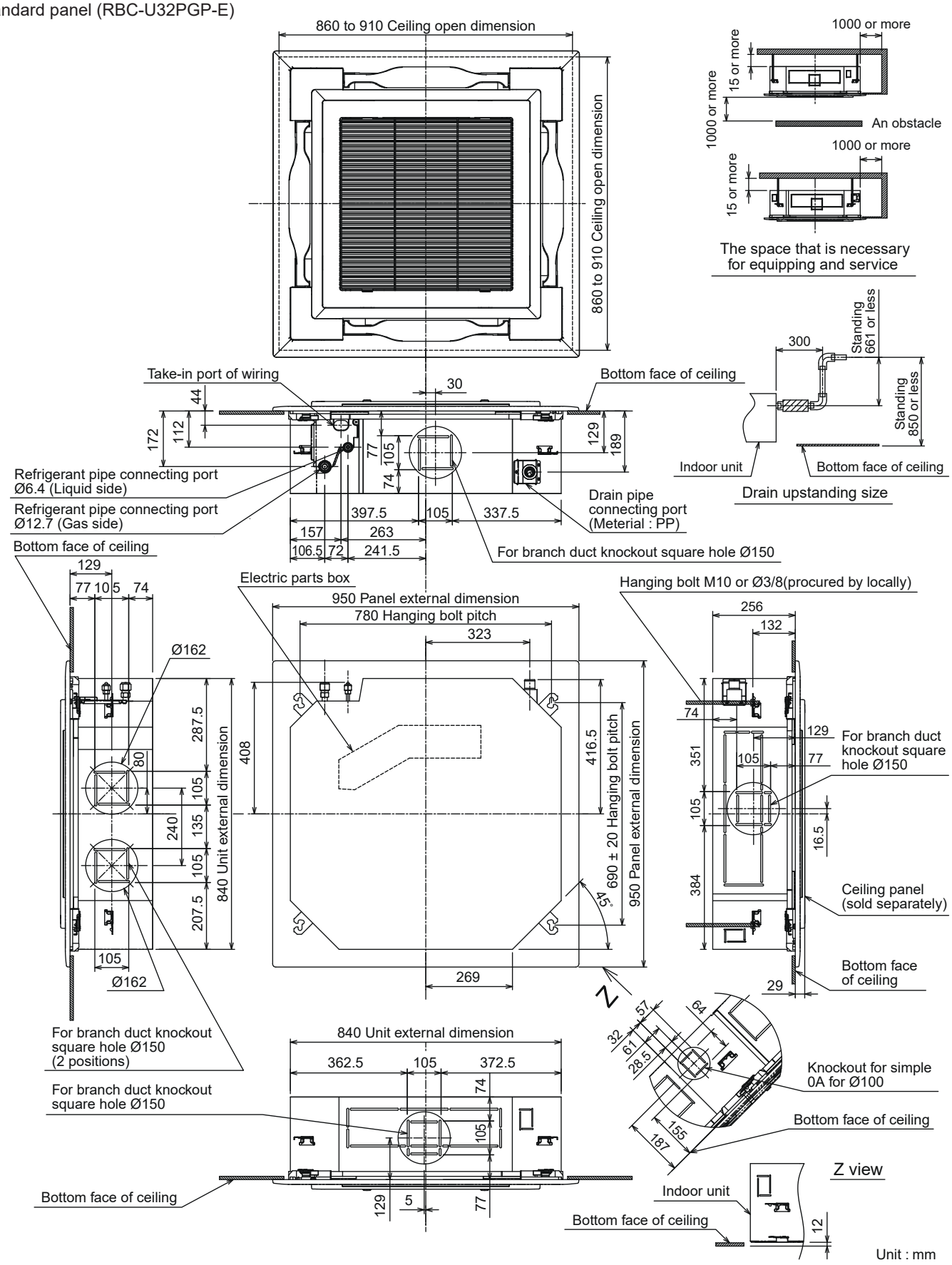

RAV-HM801UTP-E / TR

Standard panel (RBC-U32PGP-E)

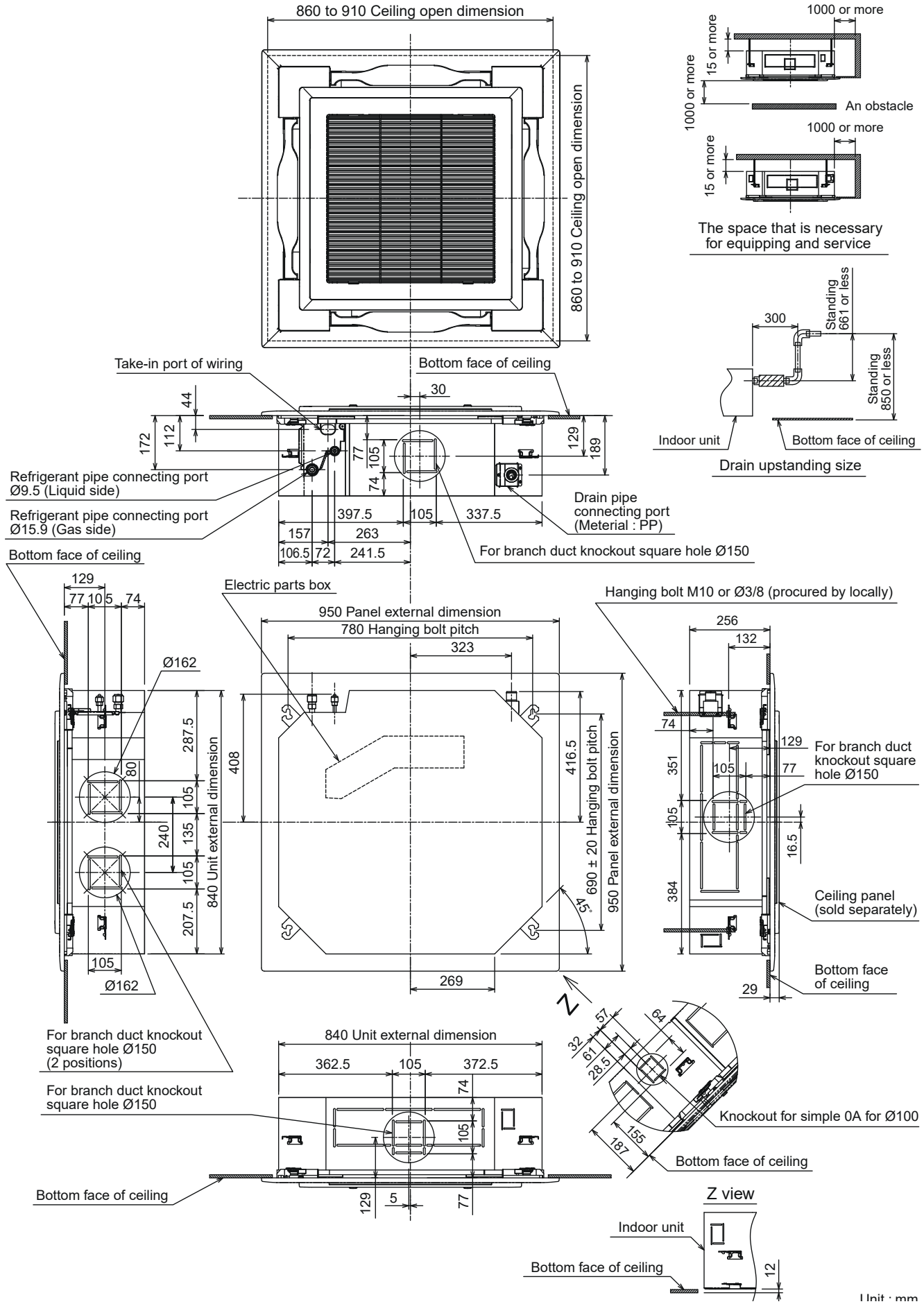

RAV-HM*__1UTP-E / TR (*110 / 140 / 160)

Standard panel (RBC-U32PGP-E)

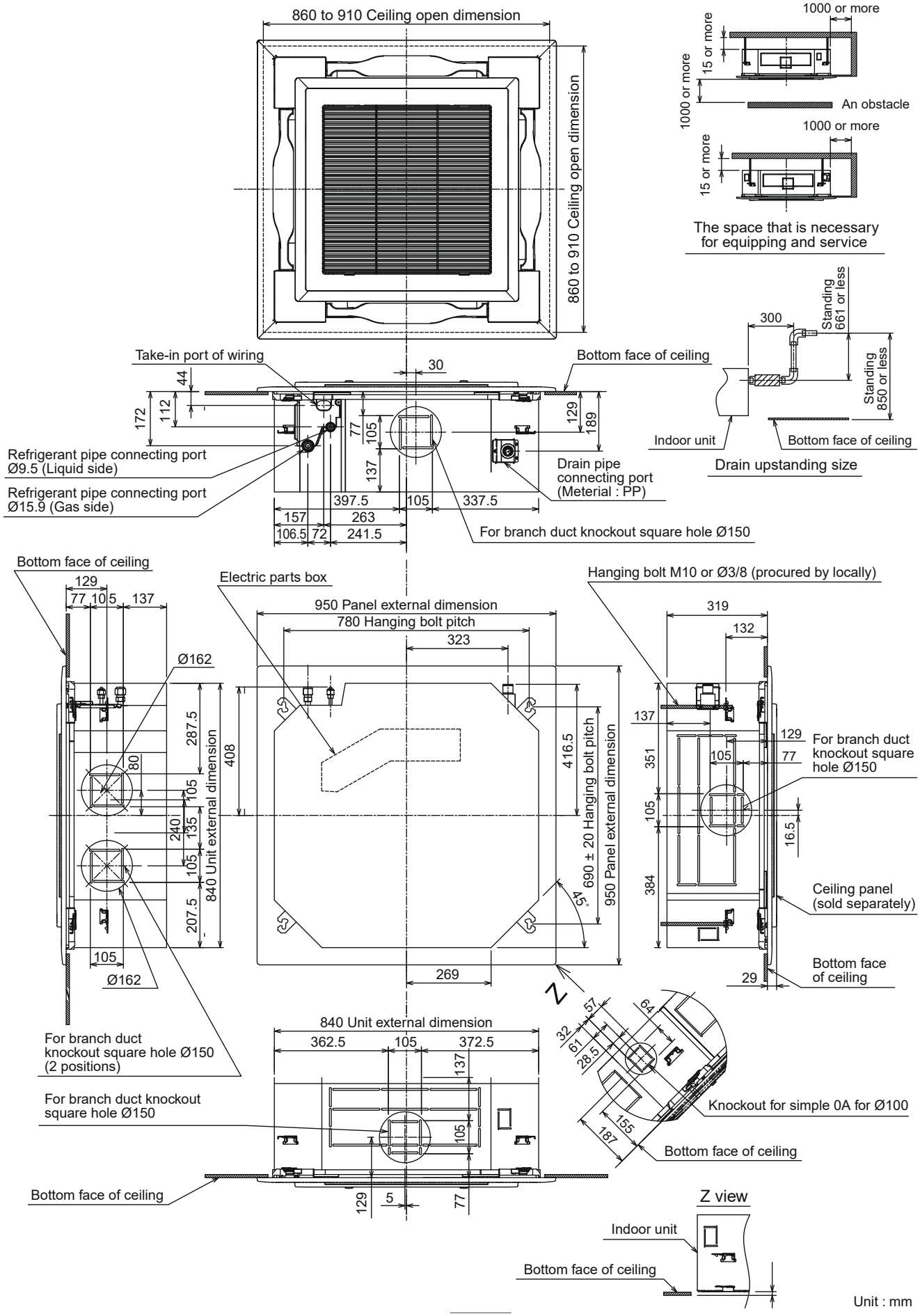

RAV-HM561UTP-E / TR

Smart design panel (RBC-U33P-E)

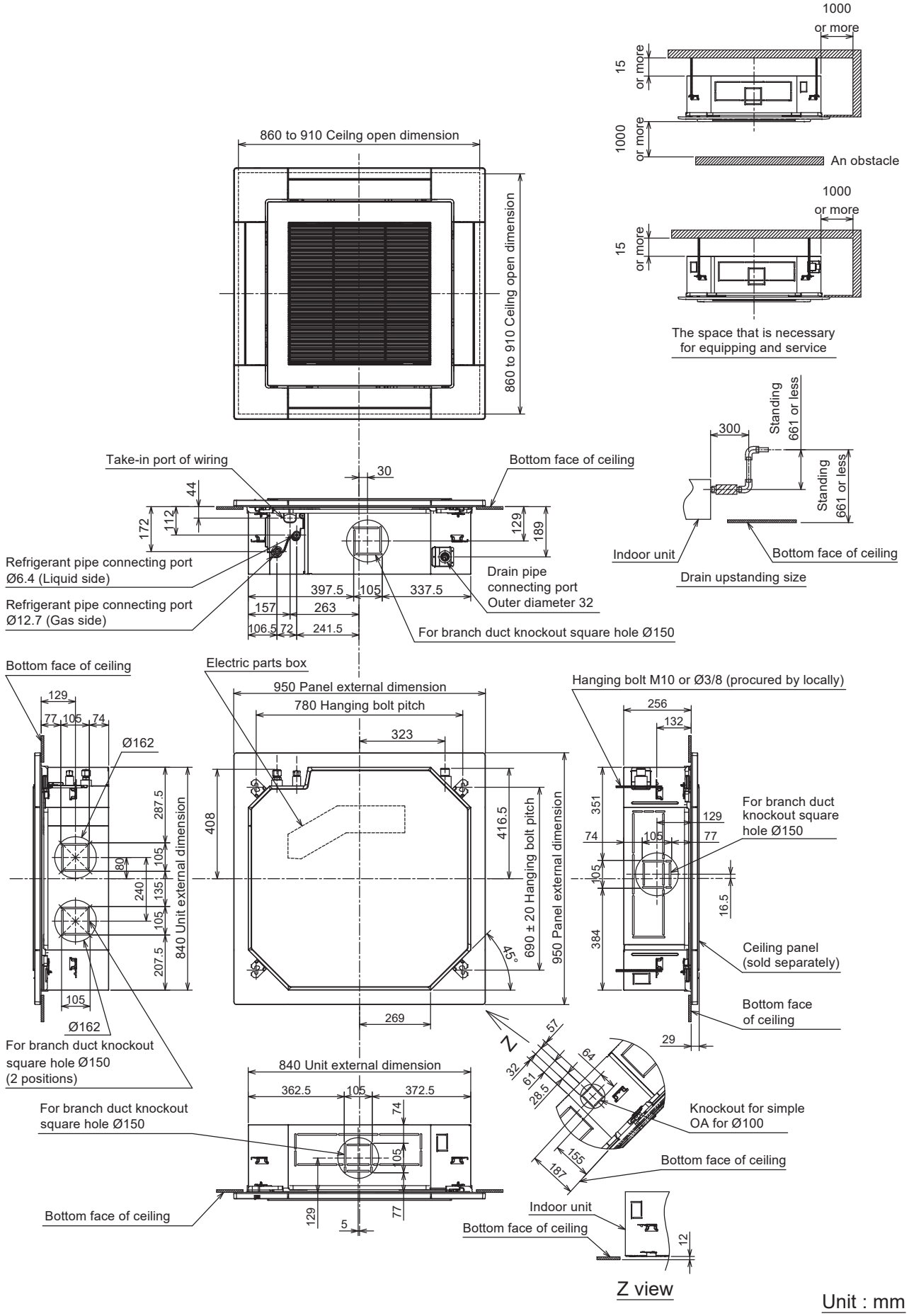

RAV-HM801UTP-E / TR

Smart design panel (RBC-U33P-E)

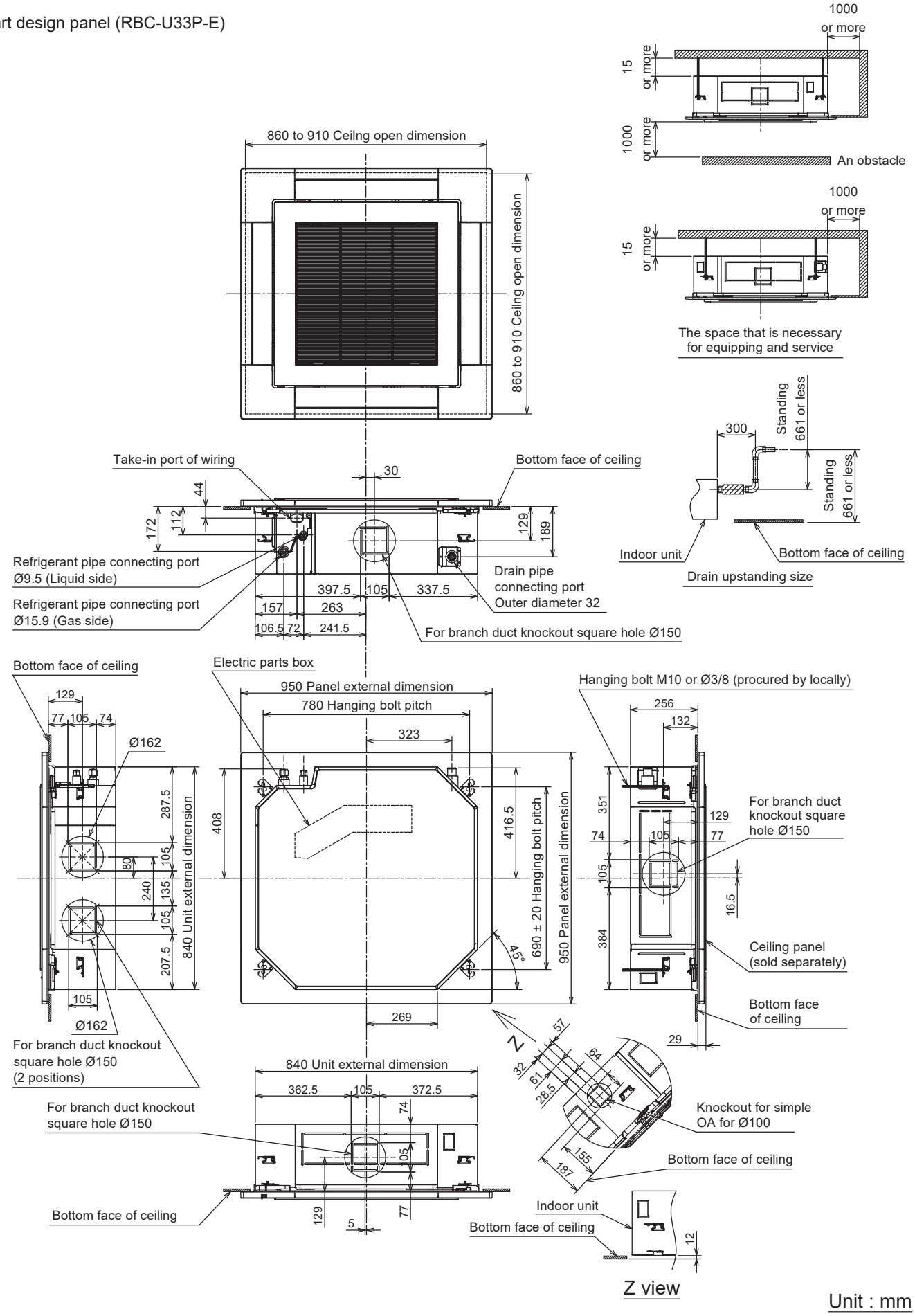

RAV-HM*__1UTP-E / TR (*110 / 140 / 160)

Smart design panel (RBC-U33P-E)

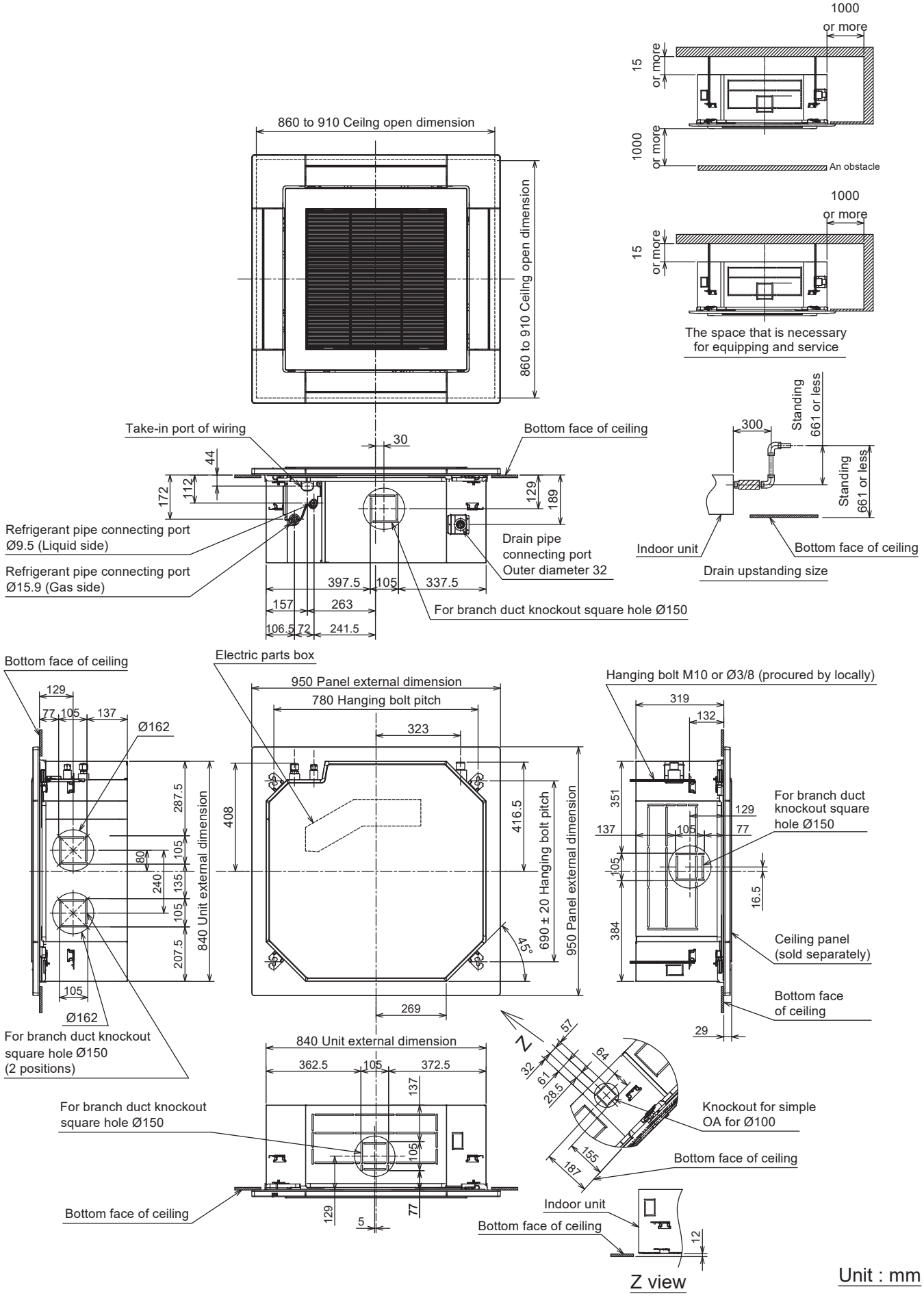

2-1-3. Wiring Diagrams

RAV-HM*__1UTP-E / TR (*56 / 80 / 110 / 140 / 160)

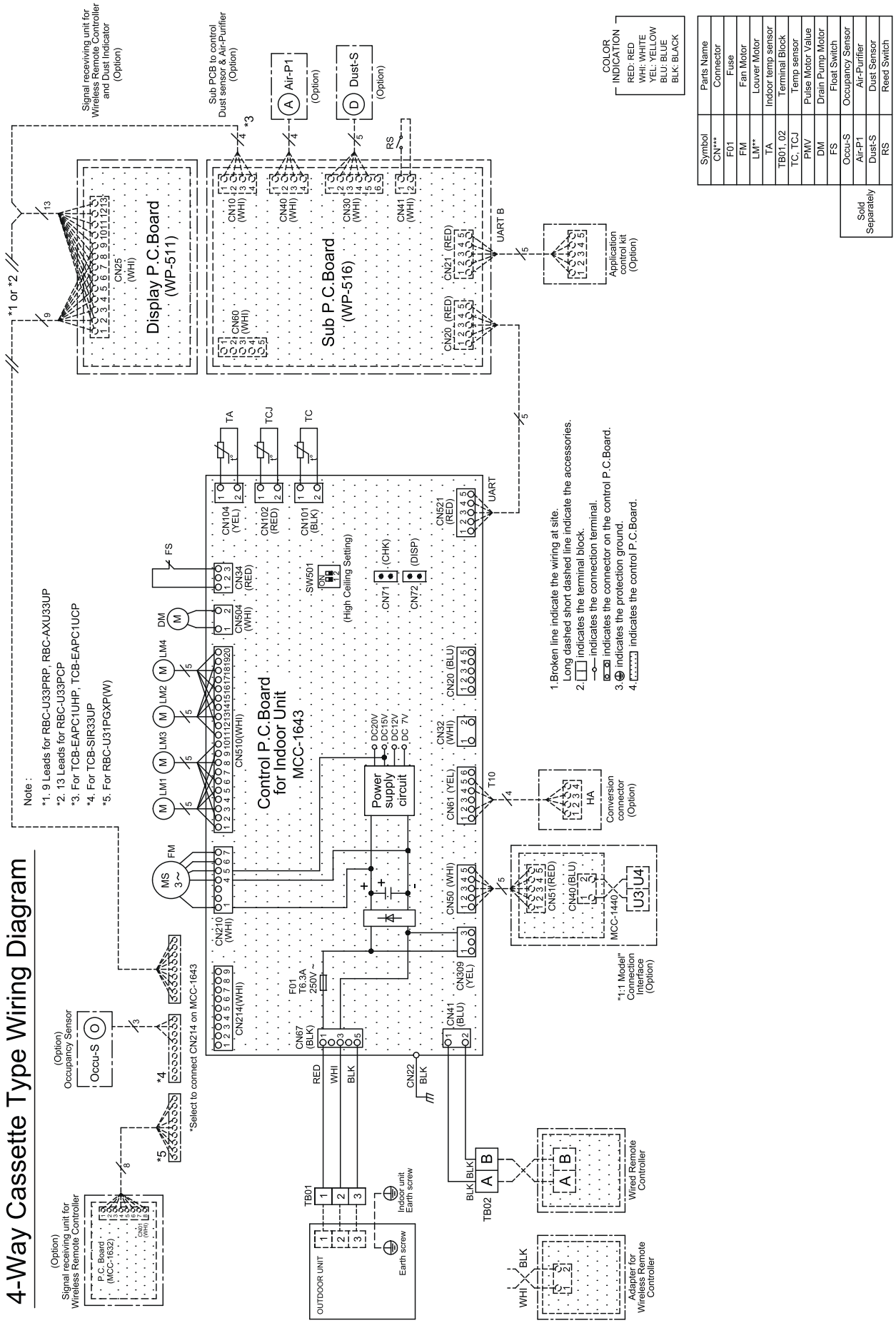

2-1-4. Sensible Capacity Table

Product models : RAV-HM561UTP-E / TR ; RAV-GV561ATP-E / TR

Specification of product at standard condition

Standard Condition		
	Indoor	27°C (DB) / 19°C (WB)
	Outdoor	35°C (DB) / 24°C (WB)

Total Cooling Capacity (TC)	5.00	kW
Sensible Heat Capacity (SHC)	4.15	kW

Outdoor air temperature	Indoor air temperature													
	20.0°C (DB) 14.0°C (WB)		23.0°C (DB) 16.0°C (WB)		26.0°C (DB) 18.0°C (WB)		27.0°C (DB) 19.0°C (WB)		28.0°C (DB) 20.0°C (WB)		30.0°C (DB) 22.0°C (WB)		32.0°C (DB) 24.0°C (WB)	
DB (°C)	TC	SHC	TC	SHC	TC	SHC	TC	SHC	TC	SHC	TC	SHC	TC	SHC
10	5.4	4.8	6.0	5.2	6.4	5.5	6.6	5.5	6.8	5.5	7.2	5.4	7.5	5.4
11	5.4	4.8	5.9	5.1	6.4	5.4	6.5	5.4	6.7	5.4	7.1	5.4	7.5	5.3
12	5.3	4.7	5.9	5.1	6.3	5.4	6.5	5.4	6.7	5.4	7.1	5.3	7.4	5.3
13	5.3	4.7	5.8	5.0	6.2	5.3	6.4	5.3	6.6	5.3	7.0	5.3	7.3	5.2
14	5.2	4.6	5.8	5.0	6.2	5.3	6.4	5.3	6.5	5.3	6.9	5.2	7.2	5.2
15	5.2	4.6	5.7	4.9	6.1	5.2	6.3	5.2	6.5	5.2	6.8	5.2	7.2	5.1
16	5.1	4.6	5.6	4.9	6.0	5.2	6.2	5.2	6.4	5.2	6.8	5.1	7.1	5.0
17	5.1	4.5	5.6	4.8	6.0	5.1	6.2	5.1	6.3	5.1	6.7	5.1	7.0	5.0
18	5.0	4.5	5.5	4.8	5.9	5.1	6.1	5.1	6.3	5.1	6.6	5.0	6.9	4.9
19	5.0	4.4	5.5	4.7	5.9	5.0	6.0	5.0	6.2	5.0	6.6	5.0	6.9	4.9
20	4.9	4.4	5.4	4.7	5.8	5.0	6.0	4.9	6.1	4.9	6.5	4.9	6.8	4.8
21	4.8	4.3	5.4	4.6	5.7	4.9	5.9	4.9	6.1	4.9	6.4	4.9	6.7	4.8
22	4.8	4.3	5.3	4.6	5.7	4.8	5.8	4.8	6.0	4.8	6.4	4.8	6.6	4.7
23	4.7	4.2	5.2	4.5	5.6	4.8	5.8	4.8	5.9	4.8	6.3	4.8	6.6	4.7
24	4.7	4.2	5.2	4.5	5.5	4.7	5.7	4.7	5.9	4.7	6.2	4.7	6.5	4.6
25	4.6	4.1	5.1	4.4	5.5	4.7	5.6	4.7	5.8	4.7	6.1	4.7	6.4	4.6
26	4.6	4.1	5.1	4.4	5.4	4.6	5.6	4.6	5.7	4.6	6.1	4.6	6.4	4.5
27	4.5	4.0	5.0	4.3	5.4	4.6	5.5	4.6	5.7	4.6	6.0	4.5	6.3	4.5
28	4.5	4.0	4.9	4.3	5.3	4.5	5.5	4.5	5.6	4.5	5.9	4.5	6.2	4.4
29	4.4	3.9	4.9	4.2	5.2	4.5	5.4	4.5	5.5	4.5	5.9	4.4	6.1	4.4
30	4.4	3.9	4.8	4.2	5.2	4.4	5.3	4.4	5.5	4.4	5.8	4.4	6.1	4.3
31	4.3	3.8	4.8	4.1	5.1	4.4	5.3	4.4	5.4	4.4	5.7	4.3	6.0	4.3
32	4.3	3.8	4.7	4.1	5.0	4.3	5.2	4.3	5.3	4.3	5.7	4.3	5.9	4.2
33	4.2	3.8	4.7	4.0	5.0	4.3	5.1	4.3	5.3	4.3	5.6	4.2	5.8	4.2
34	4.2	3.7	4.6	4.0	4.9	4.2	5.1	4.2	5.2	4.2	5.5	4.2	5.8	4.1
35	4.1	3.7	4.5	3.9	4.9	4.2	5.0	4.2	5.1	4.2	5.4	4.1	5.7	4.1
36	4.1	3.6	4.5	3.9	4.8	4.1	4.9	4.1	5.1	4.1	5.4	4.1	5.6	4.0
37	4.0	3.6	4.4	3.8	4.7	4.0	4.9	4.0	5.0	4.0	5.3	4.0	5.5	3.9
38	4.0	3.5	4.4	3.8	4.7	4.0	4.8	4.0	4.9	4.0	5.2	4.0	5.5	3.9
39	3.9	3.5	4.3	3.7	4.6	3.9	4.7	3.9	4.9	3.9	5.2	3.9	5.4	3.8
40	3.8	3.4	4.2	3.7	4.5	3.9	4.7	3.9	4.8	3.9	5.1	3.9	5.3	3.8
41	3.8	3.4	4.2	3.6	4.5	3.8	4.6	3.8	4.8	3.8	5.0	3.8	5.3	3.7
42	3.7	3.3	4.1	3.6	4.4	3.8	4.6	3.8	4.7	3.8	5.0	3.8	5.2	3.7
43	3.7	3.3	4.1	3.5	4.4	3.7	4.5	3.7	4.6	3.7	4.9	3.7	5.1	3.6
44	3.6	3.2	4.0	3.5	4.3	3.7	4.4	3.7	4.5	3.7	4.8	3.6	5.0	3.6
45	3.6	3.2	4.0	3.4	4.2	3.6	4.4	3.6	4.5	3.6	4.7	3.6	5.0	3.5
46	3.5	3.1	3.9	3.4	4.2	3.6	4.3	3.6	4.4	3.6	4.7	3.5	4.9	3.5

Product models : RAV-HM801UTP-E / TR ; RAV-GV801ATP-E / TR

Specification of product at standard condition

Standard Condition		
	Indoor	27°C (DB) / 19°C (WB)
	Outdoor	35°C (DB) / 24°C (WB)

Total Cooling Capacity (TC)	6.70	kW
Sensible Heat Capacity (SHC)	5.56	kW

Outdoor air temperature	Indoor air temperature													
	20.0°C (DB) 14.0°C (WB)		23.0°C (DB) 16.0°C (WB)		26.0°C (DB) 18.0°C (WB)		27.0°C (DB) 19.0°C (WB)		28.0°C (DB) 20.0°C (WB)		30.0°C (DB) 22.0°C (WB)		32.0°C (DB) 24.0°C (WB)	
DB (°C)	TC	SHC	TC	SHC	TC	SHC	TC	SHC	TC	SHC	TC	SHC	TC	SHC
10	7.3	6.5	8.0	6.9	8.6	7.4	8.9	7.3	9.1	7.3	9.6	7.3	10.1	7.2
11	7.2	6.4	7.9	6.8	8.5	7.3	8.8	7.3	9.0	7.3	9.5	7.2	10.0	7.1
12	7.1	6.4	7.9	6.8	8.4	7.2	8.7	7.2	8.9	7.2	9.5	7.2	9.9	7.0
13	7.1	6.3	7.8	6.7	8.3	7.1	8.6	7.1	8.8	7.1	9.4	7.1	9.8	7.0
14	7.0	6.2	7.7	6.6	8.3	7.1	8.5	7.1	8.8	7.1	9.3	7.0	9.7	6.9
15	6.9	6.2	7.6	6.6	8.2	7.0	8.4	7.0	8.7	7.0	9.2	6.9	9.6	6.8
16	6.8	6.1	7.6	6.5	8.1	6.9	8.3	6.9	8.6	6.9	9.1	6.9	9.5	6.8
17	6.8	6.0	7.5	6.4	8.0	6.9	8.3	6.8	8.5	6.9	9.0	6.8	9.4	6.7
18	6.7	6.0	7.4	6.4	7.9	6.8	8.2	6.8	8.4	6.8	8.9	6.7	9.3	6.6
19	6.6	5.9	7.3	6.3	7.8	6.7	8.1	6.7	8.3	6.7	8.8	6.7	9.2	6.6
20	6.6	5.8	7.2	6.2	7.8	6.6	8.0	6.6	8.2	6.6	8.7	6.6	9.1	6.5
21	6.5	5.8	7.2	6.2	7.7	6.6	7.9	6.6	8.1	6.6	8.6	6.5	9.0	6.4
22	6.4	5.7	7.1	6.1	7.6	6.5	7.8	6.5	8.0	6.5	8.5	6.5	8.9	6.3
23	6.3	5.7	7.0	6.0	7.5	6.4	7.7	6.4	8.0	6.4	8.4	6.4	8.8	6.3
24	6.3	5.6	6.9	6.0	7.4	6.4	7.7	6.3	7.9	6.4	8.3	6.3	8.7	6.2
25	6.2	5.5	6.9	5.9	7.3	6.3	7.6	6.3	7.8	6.3	8.2	6.2	8.6	6.1
26	6.1	5.5	6.8	5.8	7.3	6.2	7.5	6.2	7.7	6.2	8.1	6.2	8.5	6.1
27	6.1	5.4	6.7	5.8	7.2	6.1	7.4	6.1	7.6	6.1	8.0	6.1	8.4	6.0
28	6.0	5.3	6.6	5.7	7.1	6.1	7.3	6.1	7.5	6.1	8.0	6.0	8.3	5.9
29	5.9	5.3	6.5	5.6	7.0	6.0	7.2	6.0	7.4	6.0	7.9	6.0	8.2	5.9
30	5.9	5.2	6.5	5.6	6.9	5.9	7.1	5.9	7.3	5.9	7.8	5.9	8.1	5.8
31	5.8	5.2	6.4	5.5	6.8	5.8	7.0	5.8	7.2	5.8	7.7	5.8	8.0	5.7
32	5.7	5.1	6.3	5.4	6.8	5.8	7.0	5.8	7.2	5.8	7.6	5.7	7.9	5.6
33	5.6	5.0	6.2	5.4	6.7	5.7	6.9	5.7	7.1	5.7	7.5	5.7	7.8	5.6
34	5.6	5.0	6.2	5.3	6.6	5.6	6.8	5.6	7.0	5.6	7.4	5.6	7.7	5.5
35	5.5	4.9	6.1	5.2	6.5	5.6	6.7	5.6	6.9	5.6	7.3	5.5	7.6	5.4
36	5.4	4.8	6.0	5.2	6.4	5.5	6.6	5.5	6.8	5.5	7.2	5.5	7.5	5.4
37	5.4	4.8	5.9	5.1	6.3	5.4	6.5	5.4	6.7	5.4	7.1	5.4	7.4	5.3
38	5.3	4.7	5.8	5.0	6.3	5.3	6.4	5.3	6.6	5.3	7.0	5.3	7.3	5.2
39	5.2	4.7	5.8	5.0	6.2	5.3	6.4	5.3	6.5	5.3	6.9	5.2	7.2	5.2
40	5.2	4.6	5.7	4.9	6.1	5.2	6.3	5.2	6.4	5.2	6.8	5.2	7.1	5.1
41	5.1	4.5	5.6	4.8	6.0	5.1	6.2	5.1	6.4	5.1	6.7	5.1	7.0	5.0
42	5.0	4.5	5.5	4.8	5.9	5.1	6.1	5.1	6.3	5.1	6.6	5.0	6.9	4.9
43	4.9	4.4	5.5	4.7	5.8	5.0	6.0	5.0	6.2	5.0	6.5	5.0	6.8	4.9
44	4.9	4.3	5.4	4.6	5.8	4.9	5.9	4.9	6.1	4.9	6.5	4.9	6.8	4.8
45	4.8	4.3	5.3	4.6	5.7	4.9	5.8	4.8	6.0	4.8	6.4	4.8	6.7	4.7
46	4.7	4.2	5.2	4.5	5.6	4.8	5.8	4.8	5.9	4.8	6.3	4.7	6.6	4.7

Product models : RAV-HM1101UTP-E / TR ; RAV-GV1101ATP-E / TR

Specification of product at standard condition

Standard Condition		
	Indoor	27°C (DB) / 19°C (WB)
	Outdoor	35°C (DB) / 24°C (WB)

Total Cooling Capacity (TC)	9.50	kW
Sensible Heat Capacity (SHC)	7.89	kW

Outdoor air temperature	Indoor air temperature													
	20.0°C (DB) 14.0°C (WB)		23.0°C (DB) 16.0°C (WB)		26.0°C (DB) 18.0°C (WB)		27.0°C (DB) 19.0°C (WB)		28.0°C (DB) 20.0°C (WB)		30.0°C (DB) 22.0°C (WB)		32.0°C (DB) 24.0°C (WB)	
DB (°C)	TC	SHC	TC	SHC	TC	SHC	TC	SHC	TC	SHC	TC	SHC	TC	SHC
10	10.3	9.2	11.4	9.8	12.2	10.4	12.6	10.4	12.9	10.4	13.7	10.4	14.3	10.2
11	10.2	9.1	11.3	9.7	12.1	10.3	12.4	10.3	12.8	10.3	13.5	10.3	14.2	10.1
12	10.1	9.0	11.2	9.6	11.9	10.2	12.3	10.2	12.7	10.2	13.4	10.1	14.0	10.0
13	10.0	8.9	11.0	9.5	11.8	10.1	12.2	10.1	12.5	10.1	13.3	10.0	13.9	9.9
14	9.9	8.8	10.9	9.4	11.7	10.0	12.1	10.0	12.4	10.0	13.1	9.9	13.7	9.8
15	9.8	8.7	10.8	9.3	11.6	9.9	11.9	9.9	12.3	9.9	13.0	9.8	13.6	9.7
16	9.7	8.6	10.7	9.2	11.5	9.8	11.8	9.8	12.2	9.8	12.9	9.7	13.5	9.6
17	9.6	8.6	10.6	9.1	11.4	9.7	11.7	9.7	12.0	9.7	12.7	9.6	13.3	9.5
18	9.5	8.5	10.5	9.0	11.2	9.6	11.6	9.6	11.9	9.6	12.6	9.5	13.2	9.4
19	9.4	8.4	10.4	8.9	11.1	9.5	11.5	9.5	11.8	9.5	12.5	9.4	13.0	9.3
20	9.3	8.3	10.3	8.8	11.0	9.4	11.3	9.4	11.7	9.4	12.3	9.3	12.9	9.2
21	9.2	8.2	10.2	8.8	10.9	9.3	11.2	9.3	11.5	9.3	12.2	9.2	12.8	9.1
22	9.1	8.1	10.1	8.7	10.8	9.2	11.1	9.2	11.4	9.2	12.1	9.1	12.6	9.0
23	9.0	8.0	9.9	8.6	10.6	9.1	11.0	9.1	11.3	9.1	11.9	9.0	12.5	8.9
24	8.9	7.9	9.8	8.5	10.5	9.0	10.8	9.0	11.2	9.0	11.8	8.9	12.4	8.8
25	8.8	7.8	9.7	8.4	10.4	8.9	10.7	8.9	11.0	8.9	11.7	8.8	12.2	8.7
26	8.7	7.8	9.6	8.3	10.3	8.8	10.6	8.8	10.9	8.8	11.5	8.7	12.1	8.6
27	8.6	7.7	9.5	8.2	10.2	8.7	10.5	8.7	10.8	8.7	11.4	8.6	11.9	8.5
28	8.5	7.6	9.4	8.1	10.1	8.6	10.4	8.6	10.6	8.6	11.3	8.5	11.8	8.4
29	8.4	7.5	9.3	8.0	9.9	8.5	10.2	8.5	10.5	8.5	11.1	8.4	11.7	8.3
30	8.3	7.4	9.2	7.9	9.8	8.4	10.1	8.4	10.4	8.4	11.0	8.3	11.5	8.2
31	8.2	7.3	9.1	7.8	9.7	8.3	10.0	8.3	10.3	8.3	10.9	8.2	11.4	8.1
32	8.1	7.2	9.0	7.7	9.6	8.2	9.9	8.2	10.2	8.2	10.8	8.1	11.2	8.0
33	8.0	7.1	8.8	7.6	9.5	8.1	9.7	8.1	10.0	8.1	10.6	8.0	11.1	7.9
34	7.9	7.0	8.7	7.5	9.3	8.0	9.6	8.0	9.9	8.0	10.5	7.9	11.0	7.8
35	7.8	7.0	8.6	7.4	9.2	7.9	9.5	7.9	9.8	7.9	10.3	7.8	10.8	7.7
36	7.7	6.9	8.5	7.3	9.1	7.8	9.4	7.8	9.6	7.8	10.2	7.7	10.7	7.6
37	7.6	6.8	8.4	7.2	9.0	7.7	9.3	7.7	9.5	7.7	10.1	7.6	10.5	7.5
38	7.5	6.7	8.3	7.1	8.9	7.6	9.1	7.6	9.4	7.6	9.9	7.5	10.4	7.4
39	7.4	6.6	8.2	7.0	8.8	7.5	9.0	7.5	9.3	7.5	9.8	7.4	10.3	7.3
40	7.3	6.5	8.1	6.9	8.6	7.4	8.9	7.4	9.1	7.4	9.7	7.3	10.1	7.2
41	7.2	6.4	8.0	6.8	8.5	7.3	8.8	7.3	9.0	7.3	9.6	7.2	10.0	7.1
42	7.1	6.3	7.8	6.8	8.4	7.2	8.7	7.2	8.9	7.2	9.4	7.1	9.9	7.0
43	7.0	6.2	7.7	6.7	8.3	7.1	8.5	7.1	8.8	7.1	9.3	7.0	9.7	6.9
44	6.9	6.1	7.6	6.6	8.2	7.0	8.4	7.0	8.6	7.0	9.2	6.9	9.6	6.8
45	6.8	6.1	7.5	6.5	8.0	6.9	8.3	6.9	8.5	6.9	9.0	6.8	9.4	6.7
46	6.7	6.0	7.4	6.4	7.9	6.8	8.2	6.8	8.4	6.8	8.9	6.7	9.3	6.6

Product models : RAV-HM1401UTP-E / TR ; RAV-GV1401ATP-E / TR

Specification of product at standard condition

Standard Condition		
	Indoor	27°C (DB) / 19°C (WB)
	Outdoor	35°C (DB) / 24°C (WB)

Total Cooling Capacity (TC)	11.50	kW
Sensible Heat Capacity (SHC)	9.55	kW

Outdoor air temperature	Indoor air temperature													
	20.0°C (DB) 14.0°C (WB)		23.0°C (DB) 16.0°C (WB)		26.0°C (DB) 18.0°C (WB)		27.0°C (DB) 19.0°C (WB)		28.0°C (DB) 20.0°C (WB)		30.0°C (DB) 22.0°C (WB)		32.0°C (DB) 24.0°C (WB)	
DB (°C)	TC	SHC	TC	SHC	TC	SHC	TC	SHC	TC	SHC	TC	SHC	TC	SHC
10	12.5	11.1	13.8	11.9	14.8	12.6	15.2	12.6	15.6	12.6	16.5	12.5	17.3	12.3
11	12.4	11.0	13.6	11.7	14.6	12.5	15.0	12.5	15.5	12.5	16.4	12.4	17.1	12.2
12	12.2	10.9	13.5	11.6	14.5	12.4	14.9	12.4	15.3	12.4	16.2	12.3	17.0	12.1
13	12.1	10.8	13.4	11.5	14.3	12.3	14.8	12.2	15.2	12.2	16.1	12.2	16.8	12.0
14	12.0	10.7	13.2	11.4	14.2	12.1	14.6	12.1	15.0	12.1	15.9	12.0	16.6	11.8
15	11.9	10.6	13.1	11.3	14.0	12.0	14.5	12.0	14.9	12.0	15.7	11.9	16.5	11.7
16	11.7	10.5	13.0	11.2	13.9	11.9	14.3	11.9	14.7	11.9	15.6	11.8	16.3	11.6
17	11.6	10.4	12.8	11.1	13.8	11.8	14.2	11.8	14.6	11.8	15.4	11.7	16.1	11.5
18	11.5	10.3	12.7	10.9	13.6	11.6	14.0	11.6	14.4	11.6	15.3	11.6	16.0	11.4
19	11.4	10.1	12.6	10.8	13.5	11.5	13.9	11.5	14.3	11.5	15.1	11.4	15.8	11.2
20	11.3	10.0	12.4	10.7	13.3	11.4	13.7	11.4	14.1	11.4	14.9	11.3	15.6	11.1
21	11.1	9.9	12.3	10.6	13.2	11.3	13.6	11.3	14.0	11.3	14.8	11.2	15.5	11.0
22	11.0	9.8	12.2	10.5	13.0	11.1	13.4	11.1	13.8	11.1	14.6	11.1	15.3	10.9
23	10.9	9.7	12.0	10.4	12.9	11.0	13.3	11.0	13.6	11.0	14.5	10.9	15.1	10.8
24	10.8	9.6	11.9	10.2	12.7	10.9	13.1	10.9	13.5	10.9	14.3	10.8	14.9	10.6
25	10.7	9.5	11.8	10.1	12.6	10.8	13.0	10.8	13.4	10.8	14.1	10.7	14.8	10.5
26	10.5	9.4	11.6	10.0	12.5	10.7	12.8	10.6	13.2	10.7	14.0	10.6	14.6	10.4
27	10.4	9.3	11.5	9.9	12.3	10.5	12.7	10.5	13.0	10.5	13.8	10.5	14.4	10.3
28	10.3	9.2	11.4	9.8	12.2	10.4	12.5	10.4	12.9	10.4	13.6	10.3	14.3	10.2
29	10.2	9.1	11.2	9.7	12.0	10.3	12.4	10.3	12.7	10.3	13.5	10.2	14.1	10.0
30	10.1	9.0	11.1	9.6	11.9	10.2	12.2	10.2	12.6	10.2	13.3	10.1	13.9	9.9
31	9.9	8.8	11.0	9.4	11.7	10.0	12.1	10.0	12.4	10.0	13.2	10.0	13.8	9.8
32	9.8	8.7	10.8	9.3	11.6	9.9	11.9	9.9	12.3	9.9	13.0	9.8	13.6	9.7
33	9.7	8.6	10.7	9.2	11.5	9.8	11.8	9.8	12.1	9.8	12.9	9.7	13.4	9.6
34	9.6	8.5	10.6	9.1	11.3	9.7	11.7	9.7	12.0	9.7	12.7	9.6	13.3	9.4
35	9.4	8.4	10.4	9.0	11.2	9.6	11.5	9.5	11.8	9.5	12.5	9.5	13.1	9.3
36	9.3	8.3	10.3	8.9	11.0	9.4	11.4	9.4	11.7	9.4	12.4	9.4	12.9	9.2
37	9.2	8.2	10.2	8.7	10.9	9.3	11.2	9.3	11.5	9.3	12.2	9.2	12.8	9.1
38	9.1	8.1	10.0	8.6	10.7	9.2	11.1	9.2	11.4	9.2	12.0	9.1	12.6	9.0
39	9.0	8.0	9.9	8.5	10.6	9.1	10.9	9.1	11.2	9.1	11.9	9.0	12.4	8.8
40	8.8	7.9	9.8	8.4	10.5	8.9	10.8	8.9	11.1	8.9	11.7	8.9	12.3	8.7
41	8.7	7.8	9.6	8.3	10.3	8.8	10.6	8.8	10.9	8.8	11.6	8.8	12.1	8.6
42	8.6	7.7	9.5	8.2	10.2	8.7	10.5	8.7	10.8	8.7	11.4	8.6	11.9	8.5
43	8.5	7.6	9.4	8.1	10.0	8.6	10.3	8.6	10.6	8.6	11.2	8.5	11.8	8.4
44	8.4	7.4	9.2	7.9	9.9	8.4	10.2	8.4	10.5	8.4	11.1	8.4	11.6	8.2
45	8.2	7.3	9.1	7.8	9.7	8.3	10.0	8.3	10.3	8.3	10.9	8.3	11.4	8.1
46	8.1	7.2	9.0	7.7	9.6	8.2	9.9	8.2	10.2	8.2	10.8	8.1	11.3	8.0

Product models : RAV-HM1601UTP-E / TR ; RAV-GV1601ATP-E1 / TR

Specification of product at standard condition

Standard Condition		
	Indoor	27°C (DB) / 19°C (WB)
	Outdoor	35°C (DB) / 24°C (WB)

Total Cooling Capacity (TC)	13.00	kW
Sensible Heat Capacity (SHC)	10.79	kW

Outdoor air temperature	Indoor air temperature													
	20.0°C (DB) 14.0°C (WB)		23.0°C (DB) 16.0°C (WB)		26.0°C (DB) 18.0°C (WB)		27.0°C (DB) 19.0°C (WB)		28.0°C (DB) 20.0°C (WB)		30.0°C (DB) 22.0°C (WB)		32.0°C (DB) 24.0°C (WB)	
DB (°C)	TC	SHC	TC	SHC	TC	SHC	TC	SHC	TC	SHC	TC	SHC	TC	SHC
10	14.1	12.6	15.6	13.4	16.7	14.3	17.2	14.3	17.7	14.3	18.7	14.2	19.6	13.9
11	14.0	12.4	15.4	13.3	16.5	14.1	17.0	14.1	17.5	14.1	18.5	14.0	19.4	13.8
12	13.8	12.3	15.3	13.2	16.4	14.0	16.8	14.0	17.3	14.0	18.3	13.9	19.2	13.7
13	13.7	12.2	15.1	13.0	16.2	13.8	16.7	13.8	17.1	13.8	18.2	13.7	19.0	13.5
14	13.6	12.1	15.0	12.9	16.0	13.7	16.5	13.7	17.0	13.7	18.0	13.6	18.8	13.4
15	13.4	12.0	14.8	12.8	15.9	13.6	16.3	13.6	16.8	13.6	17.8	13.5	18.6	13.3
16	13.3	11.8	14.7	12.6	15.7	13.4	16.2	13.4	16.6	13.4	17.6	13.3	18.4	13.1
17	13.1	11.7	14.5	12.5	15.5	13.3	16.0	13.3	16.5	13.3	17.4	13.2	18.2	13.0
18	13.0	11.6	14.4	12.4	15.4	13.2	15.8	13.1	16.3	13.2	17.3	13.1	18.0	12.8
19	12.9	11.5	14.2	12.2	15.2	13.0	15.7	13.0	16.1	13.0	17.1	12.9	17.9	12.7
20	12.7	11.3	14.1	12.1	15.1	12.9	15.5	12.9	15.9	12.9	16.9	12.8	17.7	12.6
21	12.6	11.2	13.9	12.0	14.9	12.7	15.3	12.7	15.8	12.7	16.7	12.7	17.5	12.4
22	12.5	11.1	13.8	11.8	14.7	12.6	15.2	12.6	15.6	12.6	16.5	12.5	17.3	12.3
23	12.3	11.0	13.6	11.7	14.6	12.5	15.0	12.5	15.4	12.5	16.3	12.4	17.1	12.2
24	12.2	10.9	13.5	11.6	14.4	12.3	14.8	12.3	15.3	12.3	16.2	12.2	16.9	12.0
25	12.0	10.7	13.3	11.5	14.3	12.2	14.7	12.2	15.1	12.2	16.0	12.1	16.7	11.9
26	11.9	10.6	13.2	11.3	14.1	12.0	14.5	12.0	14.9	12.0	15.8	12.0	16.5	11.8
27	11.8	10.5	13.0	11.2	13.9	11.9	14.3	11.9	14.7	11.9	15.6	11.8	16.3	11.6
28	11.6	10.4	12.9	11.1	13.8	11.8	14.2	11.8	14.6	11.8	15.4	11.7	16.1	11.5
29	11.5	10.2	12.7	10.9	13.6	11.6	14.0	11.6	14.4	11.6	15.3	11.5	16.0	11.4
30	11.4	10.1	12.5	10.8	13.4	11.5	13.8	11.5	14.2	11.5	15.1	11.4	15.8	11.2
31	11.2	10.0	12.4	10.7	13.3	11.4	13.7	11.3	14.1	11.4	14.9	11.3	15.6	11.1
32	11.1	9.9	12.2	10.5	13.1	11.2	13.5	11.2	13.9	11.2	14.7	11.1	15.4	10.9
33	10.9	9.8	12.1	10.4	12.9	11.1	13.3	11.1	13.7	11.1	14.5	11.0	15.2	10.8
34	10.8	9.6	11.9	10.3	12.8	10.9	13.2	10.9	13.5	10.9	14.3	10.9	15.0	10.7
35	10.7	9.5	11.8	10.2	12.6	10.8	13.0	10.8	13.4	10.8	14.2	10.7	14.8	10.5
36	10.5	9.4	11.6	10.0	12.5	10.7	12.8	10.6	13.2	10.7	14.0	10.6	14.6	10.4
37	10.4	9.3	11.5	9.9	12.3	10.5	12.7	10.5	13.0	10.5	13.8	10.5	14.4	10.3
38	10.3	9.1	11.3	9.8	12.1	10.4	12.5	10.4	12.9	10.4	13.6	10.3	14.2	10.1
39	10.1	9.0	11.2	9.6	12.0	10.2	12.3	10.2	12.7	10.2	13.4	10.2	14.0	10.0
40	10.0	8.9	11.0	9.5	11.8	10.1	12.2	10.1	12.5	10.1	13.3	10.0	13.9	9.9
41	9.9	8.8	10.9	9.4	11.7	10.0	12.0	10.0	12.3	10.0	13.1	9.9	13.7	9.7
42	9.7	8.7	10.7	9.2	11.5	9.8	11.8	9.8	12.2	9.8	12.9	9.8	13.5	9.6
43	9.6	8.5	10.6	9.1	11.3	9.7	11.7	9.7	12.0	9.7	12.7	9.6	13.3	9.5
44	9.4	8.4	10.4	9.0	11.2	9.6	11.5	9.5	11.8	9.5	12.5	9.5	13.1	9.3
45	9.3	8.3	10.3	8.8	11.0	9.4	11.3	9.4	11.7	9.4	12.3	9.3	12.9	9.2
46	9.2	8.2	10.1	8.7	10.8	9.3	11.2	9.3	11.5	9.3	12.2	9.2	12.7	9.1

2-1-5. Part Load Performance

Combination

Indoor units : RAV-HM561UTP-E / TR

Outdoor unit : RAV-GV561ATP-E / TR

	Cooling		Heating	
	Capacity [Q (W)]	Power consumption [W (W)]	Capacity [Q (W)]	Power consumption [W (W)]
MINIMUM	1500	260	1500	260
RATING	5000	1600	5300	1400

Cooling

Outdoor temperature (°C)		Load(%)									
		100	90	80	70	60	50	40	30	20	10
46	Q	4290	3620	3210	2820	2410	2010	1610	1200	1200	1200
	W	1850	1750	1520	1270	1030	800	560	320	320	320
43	Q	4490	4040	3590	3140	2690	2240	1790	1350	1350	1350
	W	1780	1570	1360	1150	930	710	500	290	290	290
40	Q	4680	4210	3740	3280	2810	2340	1870	1400	1400	1400
	W	1710	1510	1310	1100	890	690	480	280	280	280
35	Q	5000	4500	4000	3500	3000	2500	2000	1500	1500	1500
	W	1600	1410	1220	1030	830	640	450	260	260	260
30	Q	5320	4790	4260	3720	3190	2660	2130	1600	1600	1600
	W	1490	1310	1130	960	770	590	420	240	240	240
25	Q	5640	5080	4510	3950	3390	2820	2260	1690	1690	1690
	W	1370	1210	1050	880	710	550	390	220	220	220
20	Q	5960	5370	4770	4170	3580	2980	2390	1790	1790	1790
	W	1260	1110	960	810	650	500	350	200	200	200

Heating

Outdoor temperature (°C)		Load(%)									
		100	90	80	70	60	50	40	30	20	10
20	Q	6660	6000	5330	4660	4000	3330	2660	2000	1890	1890
	W	1540	1370	1190	1010	840	670	500	320	290	290
15	Q	6140	5520	4910	4300	3680	3070	2460	1840	1740	1740
	W	1490	1320	1150	980	810	650	480	310	280	280
10	Q	5610	5050	4490	3930	3370	2810	2250	1680	1590	1590
	W	1430	1270	1110	940	780	620	460	300	270	270
7	Q	5300	4770	4240	3710	3180	2650	2120	1590	1500	1500
	W	1400	1240	1080	920	760	610	450	290	260	260
6	Q	4520	4070	3620	3170	2710	2260	1810	1360	1280	1280
	W	1310	1160	1010	860	710	570	420	270	240	240
5	Q	4250	3830	3410	2980	2550	2130	1700	1280	1200	1200
	W	1300	1150	1000	850	710	570	420	270	240	240
2	Q	3850	3470	3090	2700	2310	1930	1540	1160	1090	1090
	W	1250	1100	960	820	680	540	400	260	230	230
0	Q	3580	3230	2870	2510	2150	1790	1440	1080	1020	1020
	W	1210	1070	930	800	660	530	390	250	220	220
-5	Q	2920	2630	2340	2050	1750	1460	1170	880	830	830
	W	1120	990	870	740	610	490	360	230	210	210
-7	Q	2650	2390	2120	1860	1590	1320	1060	800	750	750
	W	1090	960	840	710	590	470	350	220	200	200

Combination

Indoor units : RAV-HM801UTP-E / TR

Outdoor unit : RAV-GV801ATP-E / TR

	Cooling		Heating	
	Capacity [Q (W)]	Power consumption [W (W)]	Capacity [Q (W)]	Power consumption [W (W)]
MINIMUM	1500	260	1500	260
RATING	6700	2200	7000	1900

Cooling

Outdoor temperature (℃)		Load(%)									
		100	90	80	70	60	50	40	30	20	10
46	Q	5750	4840	4310	3770	3230	2700	2160	1610	1200	1200
	W	2550	2420	2110	1790	1490	1180	870	560	320	320
43	Q	6010	5410	4810	4210	3610	3010	2400	1800	1350	1350
	W	2450	2170	1890	1620	1340	1060	780	500	290	290
40	Q	6270	5640	5020	4390	3760	3140	2510	1880	1400	1400
	W	2360	2090	1820	1550	1290	1020	750	480	280	280
35	Q	6700	6030	5360	4690	4020	3350	2680	2010	1500	1500
	W	2200	1950	1700	1450	1200	950	700	450	260	260
30	Q	7130	6420	5700	4990	4280	3560	2850	2140	1600	1600
	W	2040	1810	1580	1350	1110	880	650	420	240	240
25	Q	7560	6800	6050	5290	4540	3780	3020	2270	1690	1690
	W	1880	1670	1460	1240	1030	810	600	390	220	220
20	Q	7990	7190	6390	5590	4790	3990	3200	2400	1790	1790
	W	1730	1530	1330	1140	940	750	550	350	200	200

Heating

Outdoor temperature (℃)		Load(%)									
		100	90	80	70	60	50	40	30	20	10
20	Q	8800	7920	7040	6160	5280	4400	3520	2640	1890	1890
	W	2090	1860	1630	1400	1180	950	720	480	290	290
15	Q	8110	7300	6490	5670	4860	4050	3240	2430	1740	1740
	W	2020	1800	1570	1350	1140	910	690	470	280	280
10	Q	7420	6670	5930	5190	4450	3710	2970	2220	1590	1590
	W	1940	1730	1510	1300	1100	880	670	450	270	270
7	Q	7000	6300	5600	4900	4200	3500	2800	2100	1500	1500
	W	1900	1690	1480	1270	1070	860	650	440	260	260
6	Q	5970	5380	4780	4180	3580	2990	2390	1790	1280	1280
	W	1770	1580	1380	1180	1000	800	610	410	240	240
5	Q	5620	5060	4500	3930	3370	2810	2250	1680	1200	1200
	W	1760	1570	1370	1170	990	790	610	410	240	240
2	Q	5090	4580	4070	3560	3050	2550	2040	1530	1090	1090
	W	1690	1500	1310	1120	950	760	580	390	230	230
0	Q	4730	4270	3790	3320	2840	2370	1900	1420	1020	1020
	W	1640	1460	1280	1090	920	740	560	380	220	220
-5	Q	3850	3470	3080	2700	2310	1930	1540	1160	830	830
	W	1520	1350	1180	1010	860	690	520	350	210	210
-7	Q	3500	3150	2800	2450	2100	1750	1400	1050	750	750
	W	1470	1310	1140	980	830	660	510	340	200	200

Combination

Indoor units : RAV-HM1101UTP-E / TR

Outdoor unit : RAV-GV1101ATP-E / TR

	Cooling		Heating	
	Capacity [Q (W)]	Power consumption [W (W)]	Capacity [Q (W)]	Power consumption [W (W)]
MINIMUM	3000	600	3000	600
RATING	9500	3150	10000	3100

Cooling

Outdoor temperature (°C)		Load(%)									
		100	90	80	70	60	50	40	30	20	10
46	Q	8160	6870	6110	5340	4580	3820	3060	2410	2410	2410
	W	3650	3450	2980	2520	2060	1600	1130	740	740	740
43	Q	8520	7670	6820	5970	5110	4260	3410	2690	2690	2690
	W	3510	3100	2680	2260	1850	1440	1010	670	670	670
40	Q	8890	8000	7110	6220	5330	4450	3560	2810	2810	2810
	W	3380	2980	2570	2180	1780	1380	980	640	640	640
35	Q	9500	8550	7600	6650	5700	4750	3800	3000	3000	3000
	W	3150	2780	2400	2030	1660	1290	910	600	600	600
30	Q	10110	9100	8090	7080	6070	5050	4040	3190	3190	3190
	W	2920	2580	2230	1880	1540	1200	840	560	560	560
25	Q	10720	9650	8580	7500	6430	5360	4290	3390	3390	3390
	W	2700	2380	2060	1740	1420	1110	780	510	510	510
20	Q	11330	10200	9060	7930	6800	5660	4530	3580	3580	3580
	W	2470	2180	1880	1590	1300	1010	710	470	470	470

Heating

Outdoor temperature (°C)		Load(%)									
		100	90	80	70	60	50	40	30	20	10
20	Q	12570	11310	10060	8800	7540	6280	5030	3770	3770	3770
	W	3420	3020	2630	2240	1840	1440	1060	660	660	660
15	Q	11580	10420	9270	8110	6950	5790	4630	3470	3470	3470
	W	3290	2910	2540	2160	1770	1390	1020	640	640	640
10	Q	10590	9530	8470	7420	6360	5300	4240	3180	3180	3180
	W	3170	2800	2450	2080	1710	1340	980	610	610	610
7	Q	10000	9000	8000	7000	6000	5000	4000	3000	3000	3000
	W	3100	2740	2390	2030	1670	1310	960	600	600	600
6	Q	8530	7680	6830	5970	5120	4270	3410	2560	2560	2560
	W	2890	2550	2230	1890	1560	1220	900	560	560	560
5	Q	8030	7230	6430	5620	4820	4020	3210	2410	2410	2410
	W	2870	2530	2210	1880	1550	1210	890	560	560	560
2	Q	7270	6550	5820	5090	4360	3640	2910	2180	2180	2180
	W	2750	2430	2120	1800	1490	1160	860	530	530	530
0	Q	6770	6090	5420	4730	4060	3390	2700	2030	2030	2030
	W	2670	2360	2060	1750	1440	1130	830	520	520	520
-5	Q	5500	4960	4410	3850	3300	2760	2200	1650	1650	1650
	W	2480	2180	1910	1620	1340	1040	770	480	480	480
-7	Q	5000	4500	4000	3500	3000	2500	2000	1500	1500	1500
	W	2400	2110	1850	1570	1290	1010	750	460	460	460

Combination

Indoor units : RAV-HM1401UTP-E / TR

Outdoor unit : RAV-GV1401ATP-E / TR

	Cooling		Heating	
	Capacity [Q (W)]	Power consumption [W (W)]	Capacity [Q (W)]	Power consumption [W (W)]
MINIMUM	3000	600	3000	600
RATING	11500	4600	11900	3800

Cooling

Outdoor temperature (℃)		Load(%)									
		100	90	80	70	60	50	40	30	20	10
46	Q	9880	8320	7390	6470	5550	4620	3690	2770	2410	2410
	W	5330	5040	4360	3690	3020	2350	1680	1010	740	740
43	Q	10320	9290	8260	7220	6190	5160	4130	3100	2690	2690
	W	5130	4530	3920	3320	2720	2110	1500	900	670	670
40	Q	10760	9690	8610	7530	6460	5380	4300	3230	2810	2810
	W	4930	4350	3770	3190	2610	2030	1450	870	640	640
35	Q	11500	10350	9200	8050	6900	5750	4600	3450	3000	3000
	W	4600	4060	3520	2980	2440	1890	1350	810	600	600
30	Q	12240	11010	9790	8570	7340	6120	4900	3670	3190	3190
	W	4270	3770	3270	2770	2270	1750	1250	750	560	560
25	Q	12980	11680	10380	9080	7790	6490	5190	3890	3390	3390
	W	3940	3480	3020	2550	2090	1620	1160	690	510	510
20	Q	13710	12340	10970	9600	8230	6860	5490	4110	3580	3580
	W	3610	3190	2760	2340	1920	1480	1060	640	470	470

Heating

Outdoor temperature (℃)		Load(%)									
		100	90	80	70	60	50	40	30	20	10
20	Q	14960	13460	11970	10470	8970	7480	5980	4490	3770	3770
	W	4190	3710	3240	2780	2300	1830	1360	880	660	660
15	Q	13780	12400	11030	9650	8270	6890	5510	4130	3470	3470
	W	4040	3580	3120	2680	2220	1760	1310	850	640	640
10	Q	12610	11350	10080	8820	7560	6300	5040	3780	3180	3180
	W	3890	3450	3010	2580	2140	1700	1260	820	610	610
7	Q	11900	10710	9520	8330	7140	5950	4760	3570	3000	3000
	W	3800	3370	2940	2520	2090	1660	1230	800	600	600
6	Q	10150	9140	8120	7110	6090	5080	4060	3050	2560	2560
	W	3540	3140	2740	2350	1950	1550	1150	750	560	560
5	Q	9550	8600	7640	6690	5730	4780	3820	2870	2410	2410
	W	3520	3120	2720	2330	1940	1540	1140	740	560	560
2	Q	8650	7790	6920	6060	5190	4330	3460	2600	2180	2180
	W	3370	2990	2610	2240	1860	1480	1090	710	530	530
0	Q	8050	7250	6440	5640	4830	4030	3220	2420	2030	2030
	W	3270	2900	2530	2170	1800	1430	1060	690	520	520
-5	Q	6550	5900	5240	4590	3930	3280	2620	1970	1650	1650
	W	3030	2690	2350	2010	1670	1330	980	640	480	480
-7	Q	5950	5360	4760	4170	3570	2980	2380	1790	1500	1500
	W	2940	2600	2270	1950	1620	1290	950	620	460	460

Combination

Indoor units : RAV-HM1601UTP-E / TR

Outdoor unit : RAV-GV1601ATP-E1 / TR

	Cooling		Heating	
	Capacity [Q (W)]	Power consumption [W (W)]	Capacity [Q (W)]	Power consumption [W (W)]
MINIMUM	3000	600	3000	600
RATING	13000	5400	13500	3900

Cooling

Outdoor temperature (℃)		Load(%)									
		100	90	80	70	60	50	40	30	20	10
46	Q	11160	9400	8360	7320	6270	5220	4180	3130	2410	2410
	W	6250	5930	5150	4380	3600	2820	2060	1270	740	740
43	Q	11670	10500	9330	8170	7000	5830	4670	3500	2690	2690
	W	6020	5330	4630	3930	3230	2540	1850	1150	670	670
40	Q	12170	10950	9730	8520	7300	6080	4870	3650	2810	2810
	W	5790	5120	4450	3780	3110	2440	1780	1100	640	640
35	Q	13000	11700	10400	9100	7800	6500	5200	3900	3000	3000
	W	5400	4780	4150	3530	2900	2280	1660	1030	600	600
30	Q	13830	12450	11070	9680	8300	6920	5530	4150	3190	3190
	W	5010	4440	3850	3280	2690	2120	1540	960	560	560
25	Q	14670	13200	11730	10270	8800	7330	5870	4400	3390	3390
	W	4630	4090	3560	3020	2480	1950	1420	880	510	510
20	Q	15500	13950	12400	10850	9300	7750	6200	4650	3580	3580
	W	4240	3750	3260	2770	2280	1790	1300	810	470	470

Heating

Outdoor temperature (℃)		Load(%)									
		100	90	80	70	60	50	40	30	20	10
20	Q	16970	15270	13580	11880	10180	8480	6790	5090	3770	3770
	W	4300	3830	3360	2900	2420	1960	1490	1020	660	660
15	Q	15640	14070	12510	10940	9380	7820	6250	4690	3470	3470
	W	4140	3700	3240	2790	2340	1890	1430	990	640	640
10	Q	14300	12870	11440	10010	8580	7150	5720	4290	3180	3180
	W	3990	3560	3120	2690	2250	1820	1380	950	610	610
7	Q	13500	12150	10800	9450	8100	6750	5400	4050	3000	3000
	W	3900	3480	3050	2630	2200	1780	1350	930	600	600
6	Q	11520	10370	9220	8060	6910	5760	4610	3460	2560	2560
	W	3640	3240	2840	2450	2050	1660	1260	870	560	560
5	Q	10840	9760	8670	7580	6500	5420	4340	3260	2410	2410
	W	3620	3220	2820	2430	2040	1650	1250	860	560	560
2	Q	9820	8840	7860	6870	5890	4910	3930	2950	2180	2180
	W	3470	3090	2700	2330	1950	1580	1200	830	530	530
0	Q	9140	8220	7310	6390	5480	4570	3660	2740	2030	2030
	W	3370	3000	2630	2270	1900	1540	1170	800	520	520
-5	Q	7430	6690	5950	5200	4460	3720	2970	2230	1650	1650
	W	3120	2780	2430	2100	1760	1420	1080	750	480	480
-7	Q	6750	6080	5400	4720	4050	3380	2700	2030	1500	1500
	W	3020	2690	2350	2030	1700	1380	1040	720	460	460

2-1-6. Air Throw Distance Chart

RAV-HM561UTP-E / TR

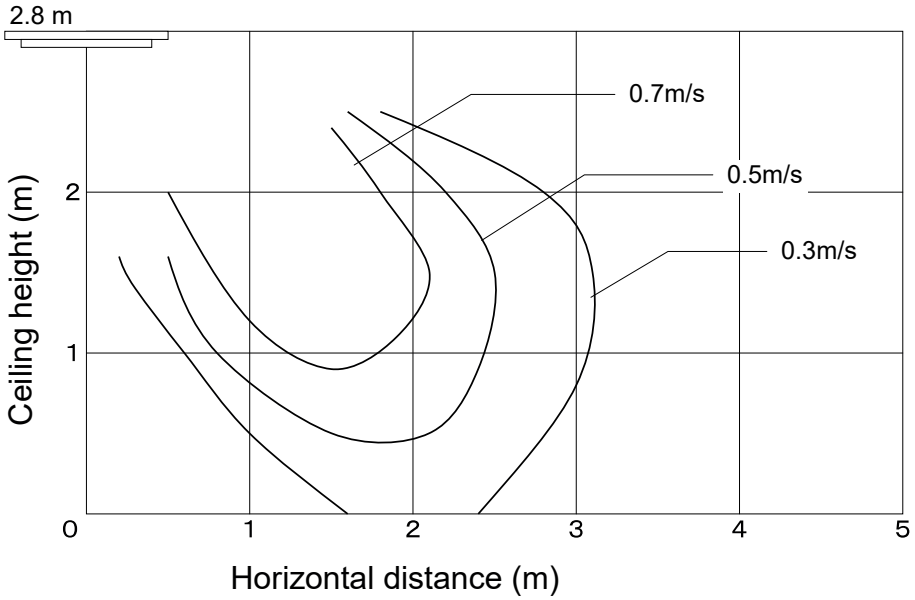

RAV-HM801UTP-E / TR

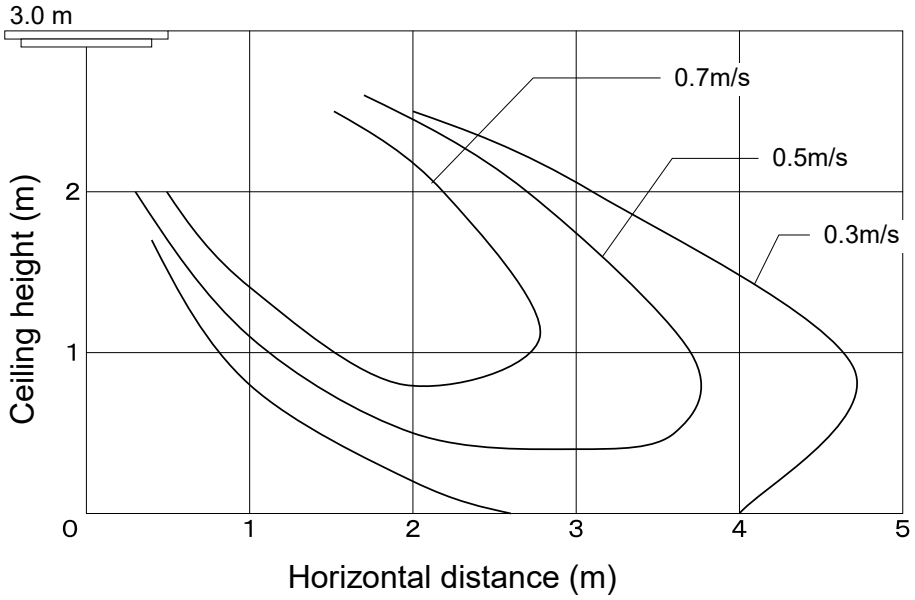

RAV-HM1101UTP-E / TR

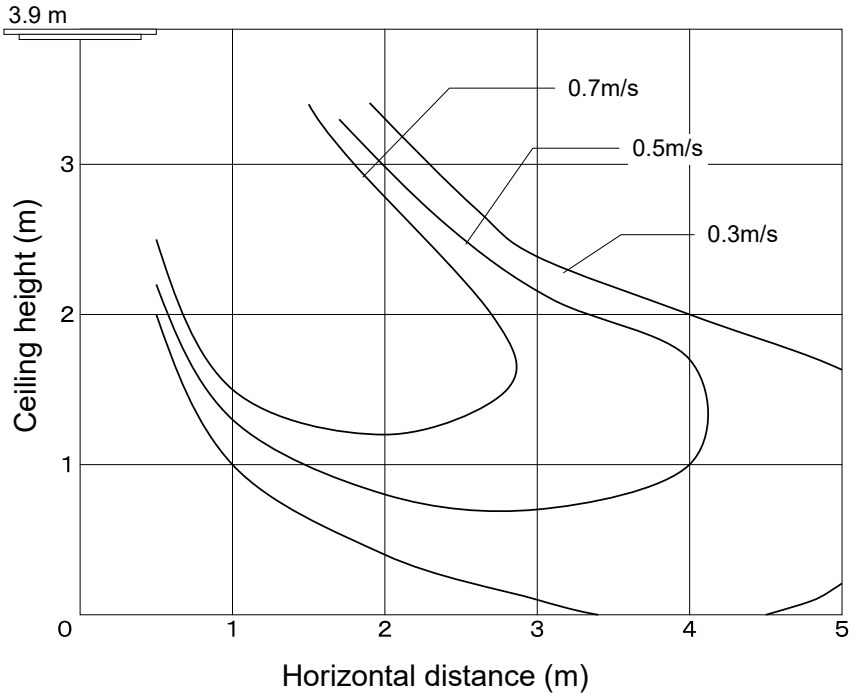

RAV-HM1101UTP-E / T (High ceiling)

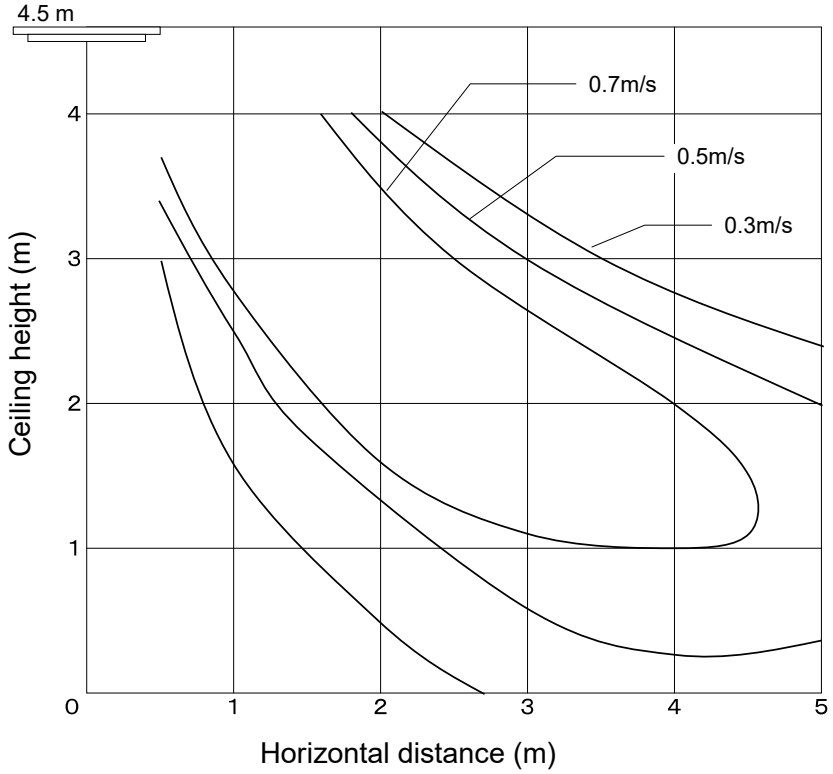

RAV-HM1401UTP-E / TR

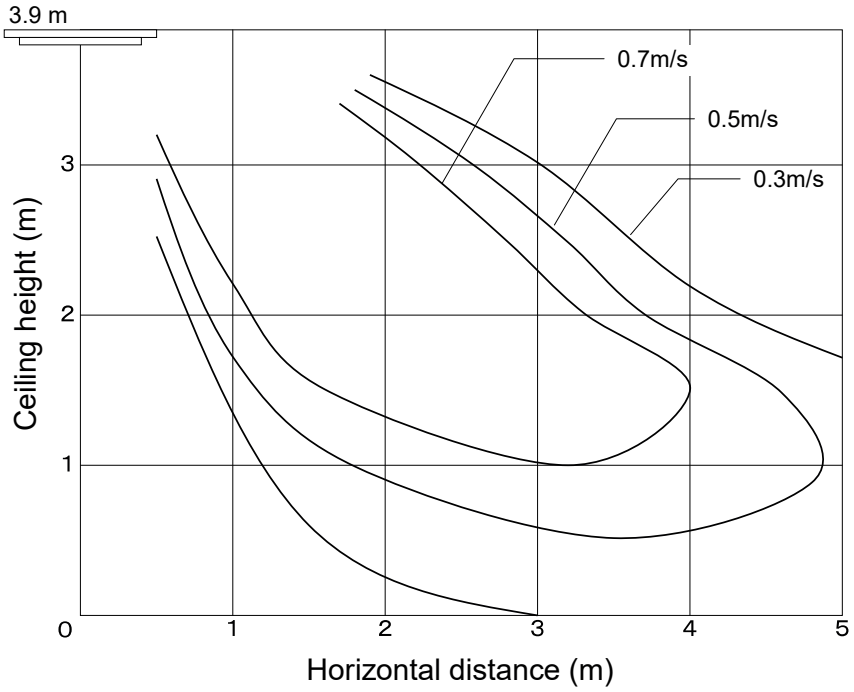

RAV-HM1401UTP-E / TR (High ceiling)

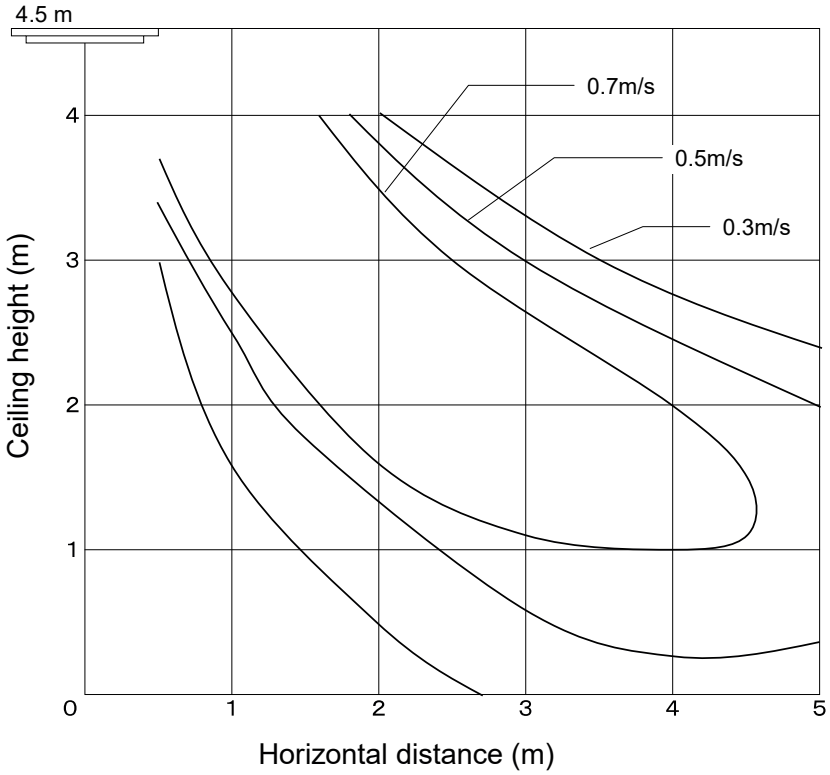

RAV-HM1601UTP-E / TR

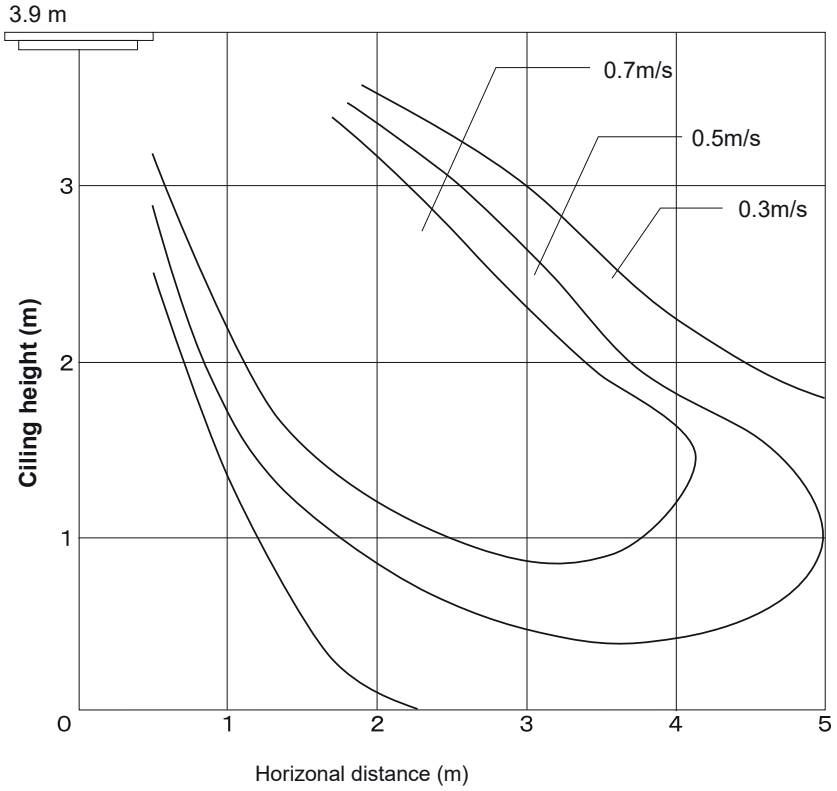

RAV-HM1601UTP-E / TR (High ceiling)

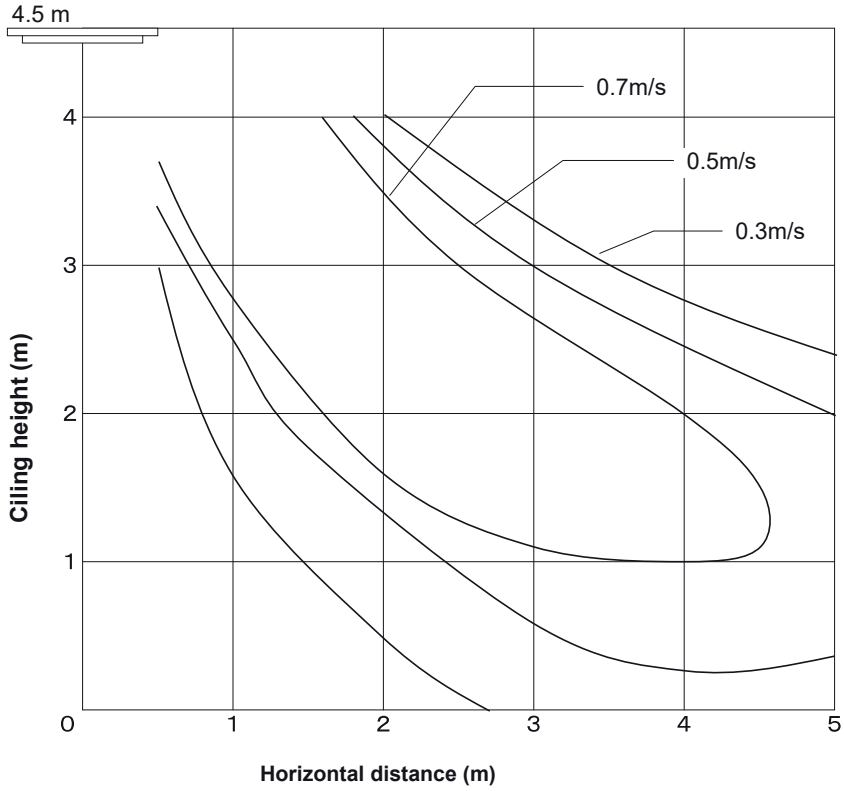

2-1-7. Sound characteristics (NC curve)

RAV-HM561UTP-E / TR

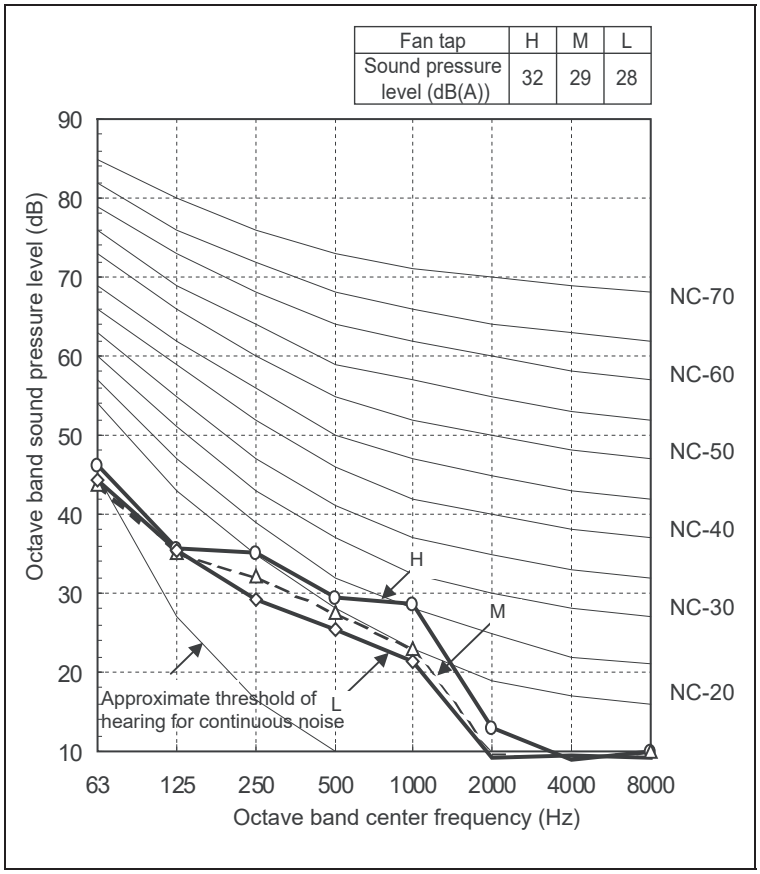

RAV-HM801UTP-E / TR

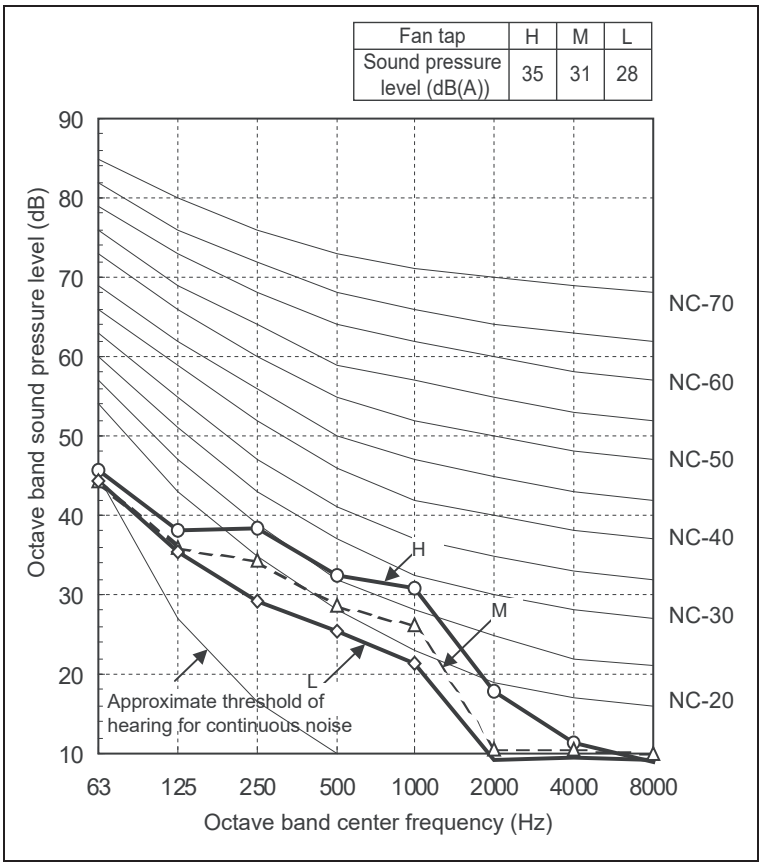

RAV-HM1101UTP-E / TR

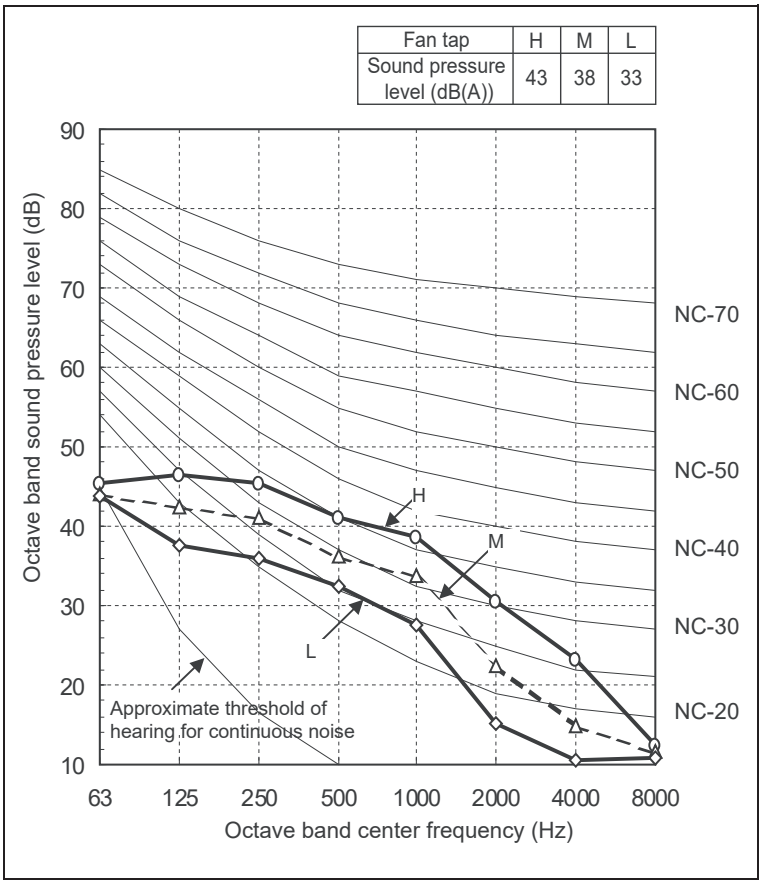

RAV-HM1401UTP-E / TR

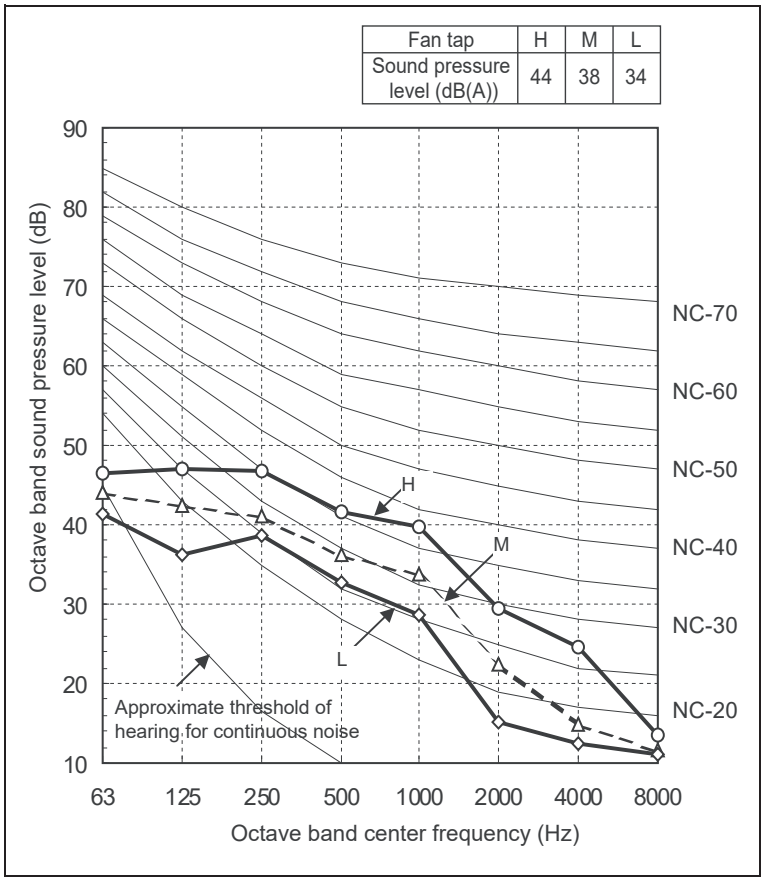

RAV-HM1601UTP-E / TR

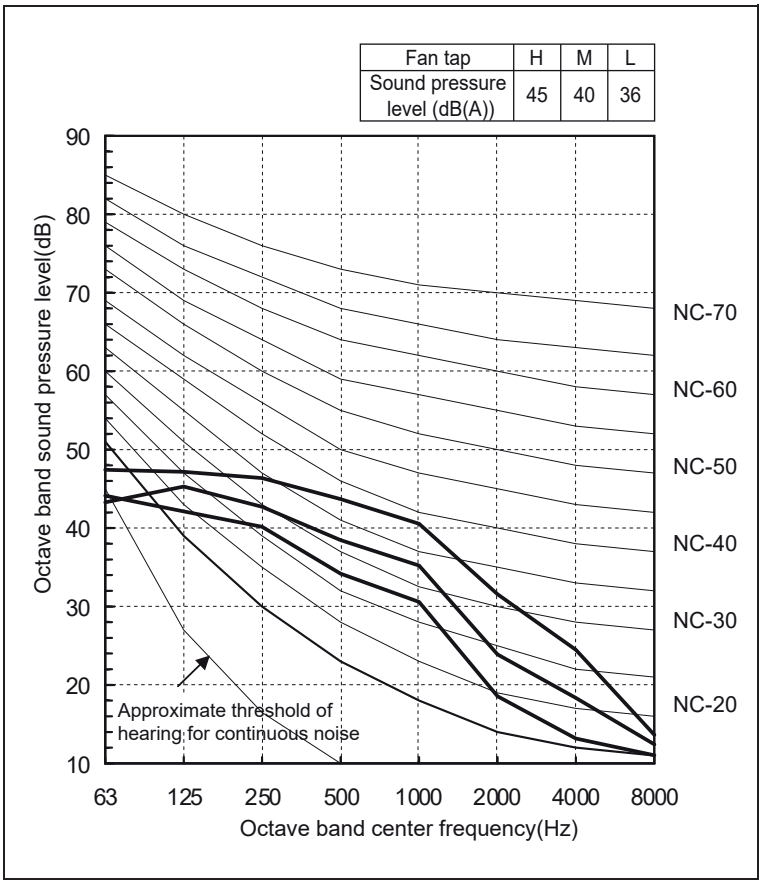

2-1-8 Accessories

Optional parts for 4-Way Cassette type

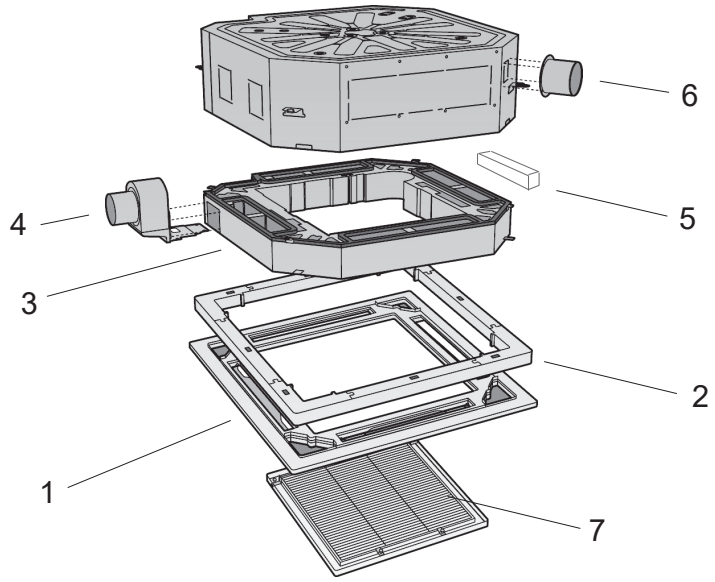

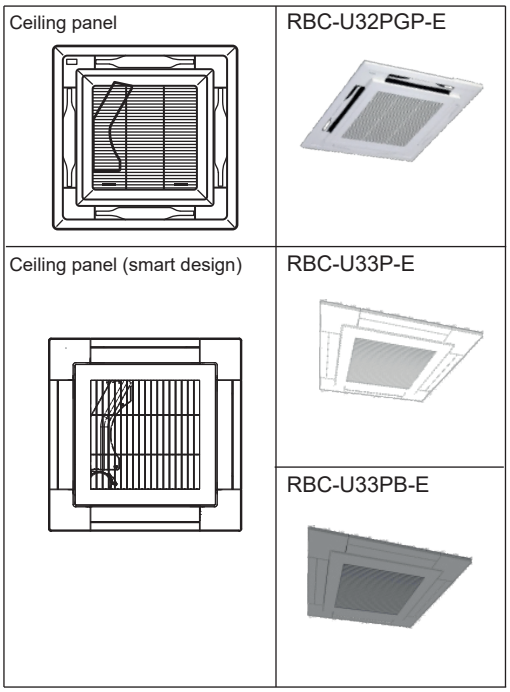

No		Type	Model name	Qty/unit	Note
1	1.1	Ceiling panel	RBC-U32PGP-E	1	White (2.5GY9.0/0.5)
	1.2	Ceiling panel (smart design)	RBC-U33P-E	1	White (5PB9/1)
	1.3	Ceiling panel (smart design)	RBC-U33PB-E	1	Black (RAL9005)
2		Spacer for height adjustment	TCB-SP1602UE	1	50 mm
3		Fresh-air chamber	TCB-GFC1602UE	1	Use with TCB-GB1602UUL
4		Fresh-air inlet box	TCB-GB1602UE	1	Connection = Dia. 100 mm.
5		Air-discharge direction kit	TCB-BC1602UE	1	6-direction patterns
6		Auxiliary fresh air flange	TCB-FF101URE2	1	Connection = Dia.100
7		PM2.5 filter	TCB-PLFC1UPE-120	1	Before pre-filter
			TCB-PLFC2UPE-80	1	After pre-filter

Applicable Compatability Table			Ceiling panel RBC-U32PGP-E	Ceiling panel (smart design) RBC-U33P-E	Ceiling panel (smart design, black) RBC-U33PB-E	Wireless receiver kit RBC-AXU31UP-E	Wireless receiver kit RBC-AXU33UP-E	Occupancy sensor TCB-SIR33UP-E	Wireless remote controller kit (black) RBC-AXU33UPB-E	Air purifier kit (HTM) TCB-EAPC1UHP-E	Air purifier kit (MTM) TCB-EABC1UHP-E	Spacer for height adjustment TCB-SP1602UE	Fresh-air inlet box + Fresh-air chamber TCB-GB1602UE+TCB-GFC1602UE	Air-discharge direction kit TCB-BC1602UE	Auxiliary fresh air flange TCB-FF101URE2	PM2.5 filter TCB-PLFC1UPE-120	PM2.5 filter TCB-PLFC2UPE-80
Panel	Ceiling panel	RBC-U32PGP-E				OK						OK	OK	OK	OK	OK	OK
	Ceiling panel (smart design)	RBC-U33P-E					OK	OK		OK	OK				OK	OK	OK
	Ceiling panel (smart design,black)	RBC-U33PB-E							OK						OK	OK	OK
Wireless receiver kit		RBC-AXU31UP-E	OK									OK	OK	OK	OK	OK	OK
Wireless receiver kit		RBC-AXU33UP-E		OK											OK	OK	OK
Occupancy sensor		TCB-SIR33UP-E		OK											OK	OK	OK
Wireless remote controller kit (black)		RBC-AXU33UPB-E			OK										OK	OK	OK
Air purifier kit (HTM)		TCB-EAPC1UHP-E		OK											OK	OK	OK
Air purifier kit (MTM)		TCB-EABC1UHP-E		OK											OK	OK	OK
Optional parts	Spacer for height adjustment	TCB-SP1602UE	OK			OK							OK	OK	OK	OK	OK
	Fresh-air inlet box + Fresh-air chamber	TCB-GB1602UE+ TCB-GFC1602UE	OK			OK						OK		OK	OK	OK	OK
	Air-discharge direction kit	TCB-BC1602UE	OK			OK						OK	OK		OK	OK	OK
	Auxiliary fresh air flange	TCB-FF101URE2	OK	OK	OK	OK	OK	OK	OK	OK	OK	OK	OK	OK		OK	OK
	PM2.5 filter	TCB-PLFC1UPE-120	OK	OK	OK	OK	OK	OK	OK	OK	OK	OK	OK	OK	OK		
	PM2.5 filter	TCB-PLFC2UPE-80	OK	OK	OK	OK	OK	OK	OK	OK	OK	OK	OK	OK	OK		

Appendix

1. Ceiling Panel

1.1 Ceiling Panel (Standard) : RBC-U32PGP-E

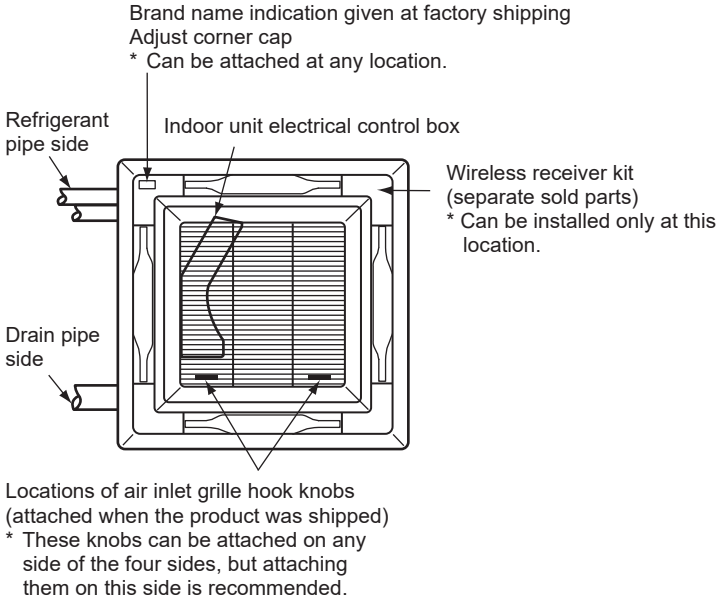

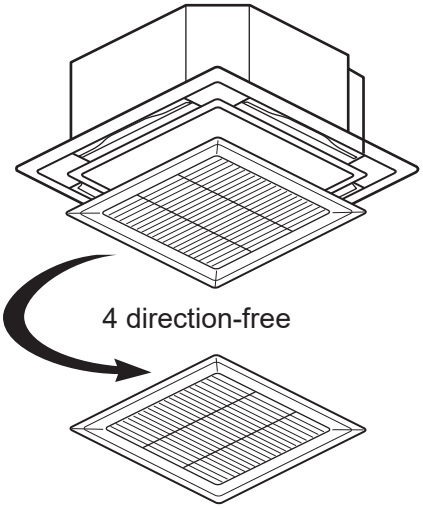

Wireless remote controller kit for standard panel : 40VCI4--7-TEE

1.2 Ceiling Panel (Smart design: White) : RBC-U33P-E

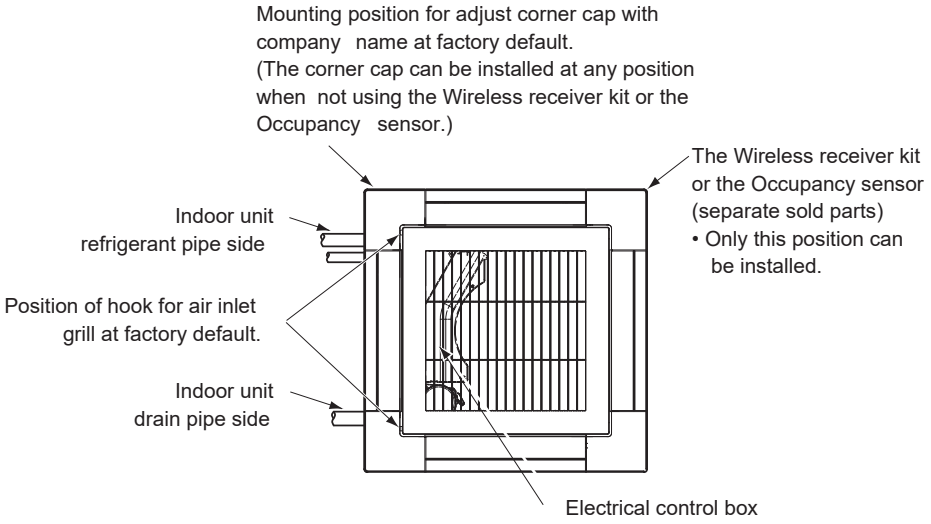

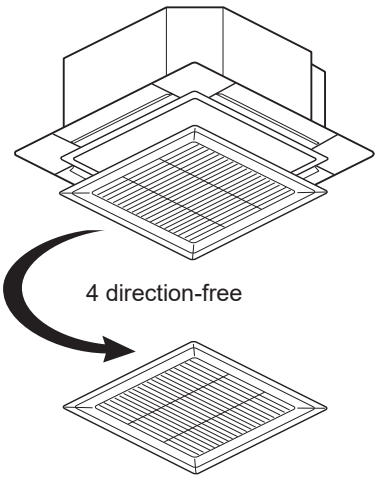

Wireless remote controller kit for Smart Design panel : 40VCI7--8-TEE

Occupancy sensor kit for Smart Design panel : 40VSUM--S8F-TEE

Air Purifier kit (HTM) for Design panel : TCB-EAPC1UHP-E
*together with wireless receiver and dust sensor

INSTALLATION DIAGRAM OF AIR PURIFIER KIT

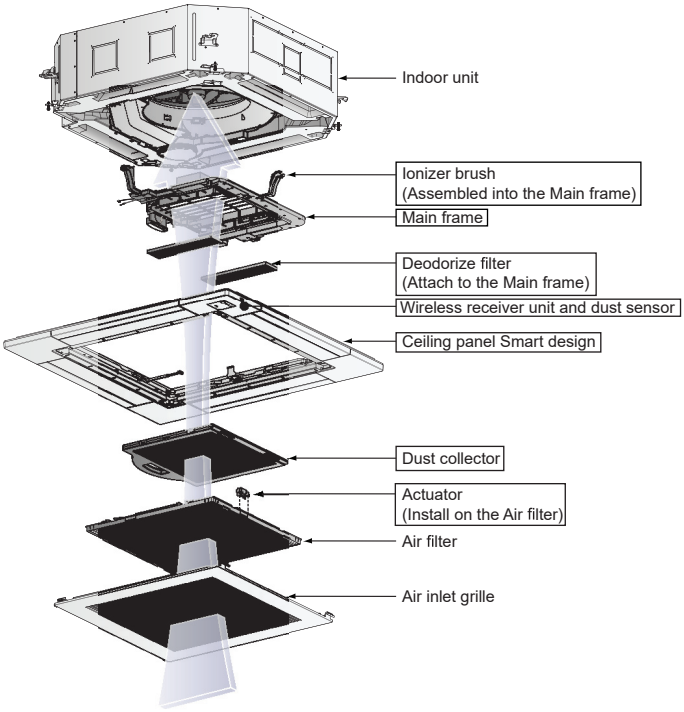

Air Purifier kit (MTM) for Design panel : TCB-EABC1UHP-E
*together with wireless receiver and dust sensor

INSTALLATION DIAGRAM OF AIR PURIFIER KIT

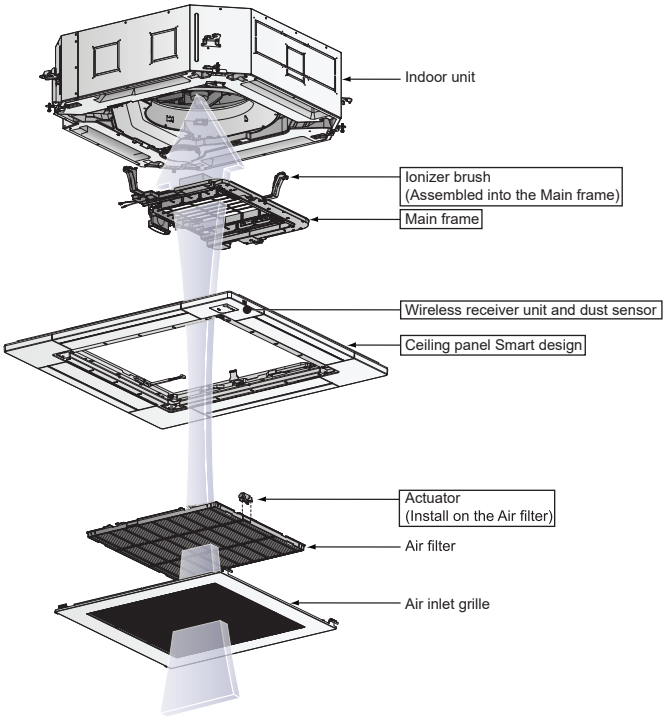

1.3 Ceiling Panel (Smart design: Black) : RBC-U33PB-E

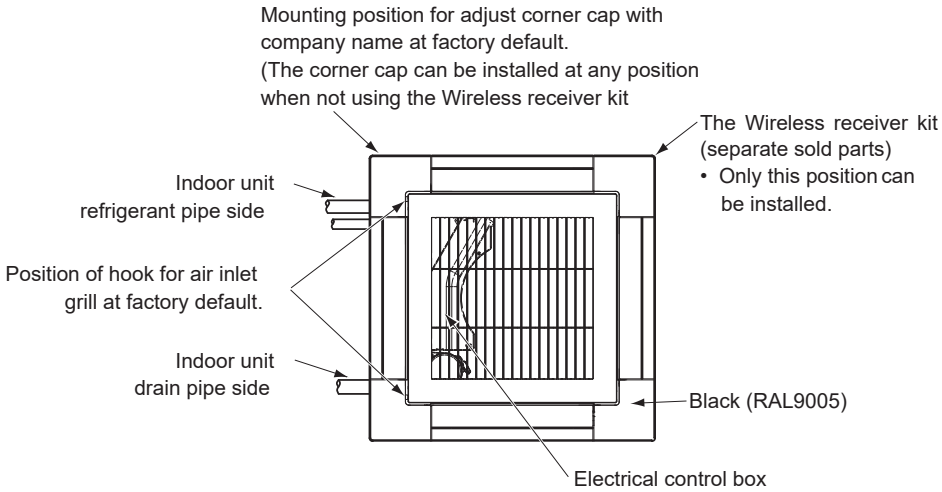

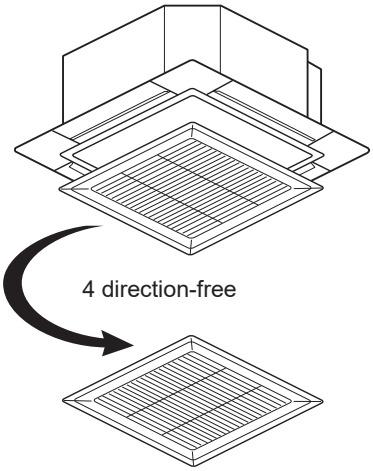

Wireless remote controller kit for
Smart Design panel : RBC-AXU33UPB-E

2. Spacer for height adjustment : TCB-SP1602UE

Unit : mm

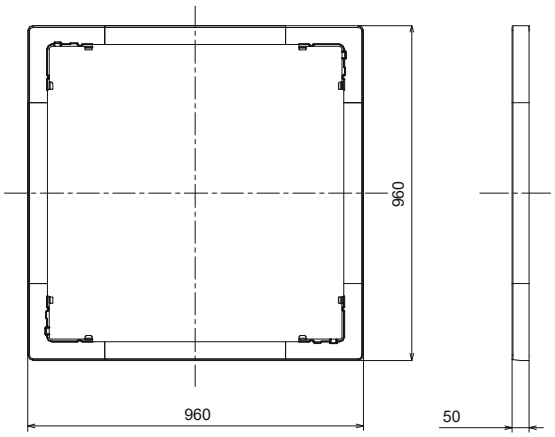

Material : Styrene foam
Color : Moon white

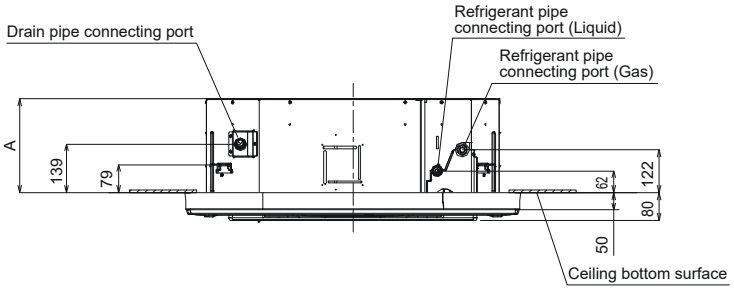

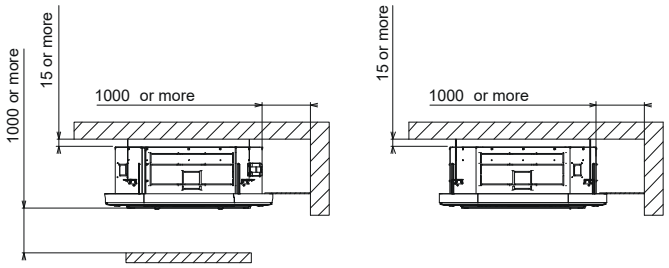

Space required for installation

	A
009 to 030 type	206
036 to 056 type	269

3. Fresh-air chamber : TCB-GFC1602UE

Unit : mm

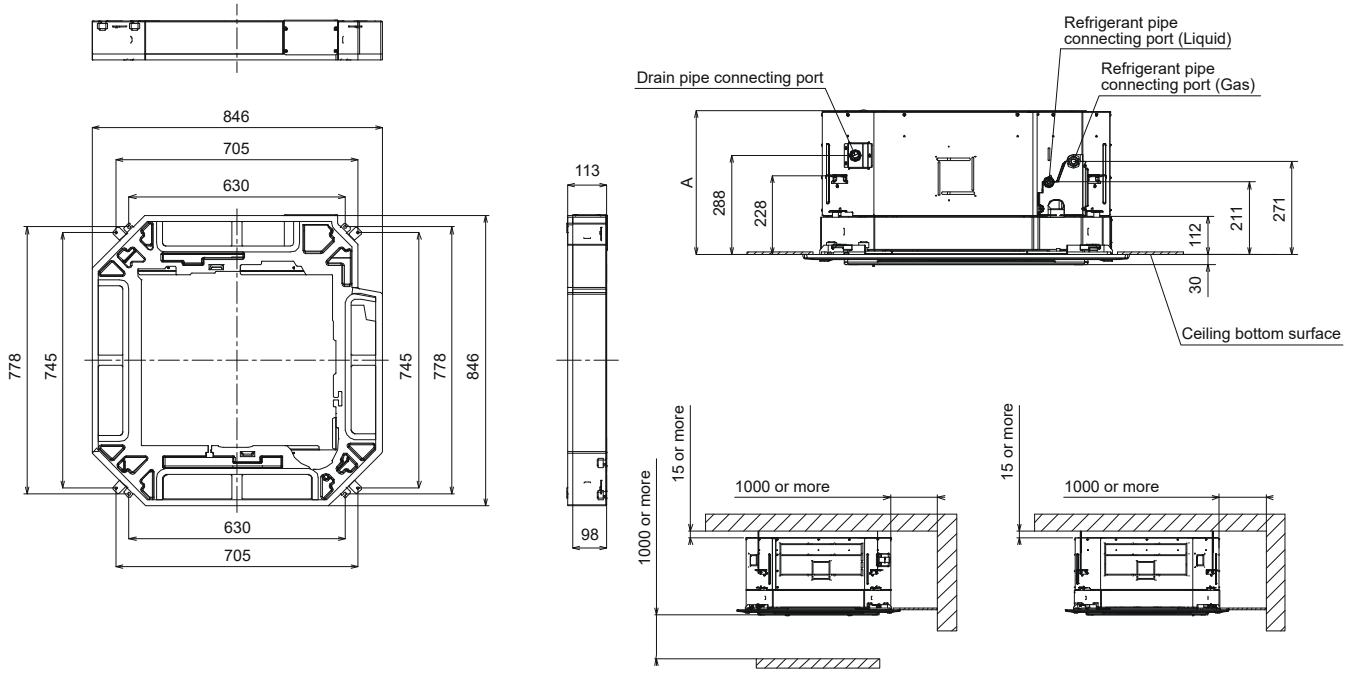

Space required for installation

	A
009 to 030 type	356
036 to 056 type	419

4. Fresh-air inlet box : TCB-GB1602UE

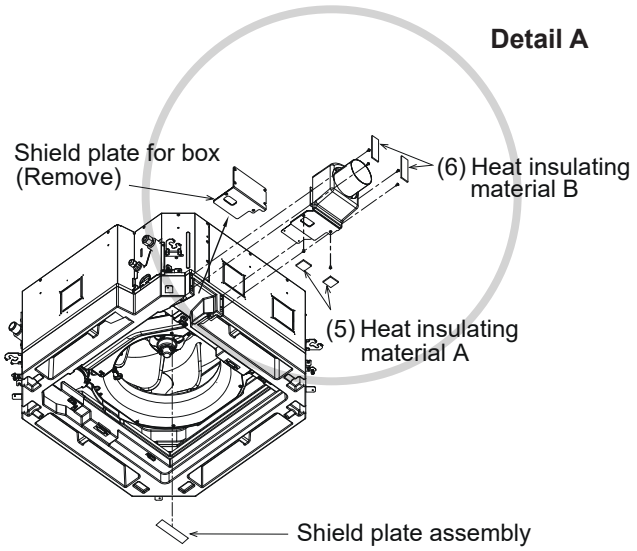

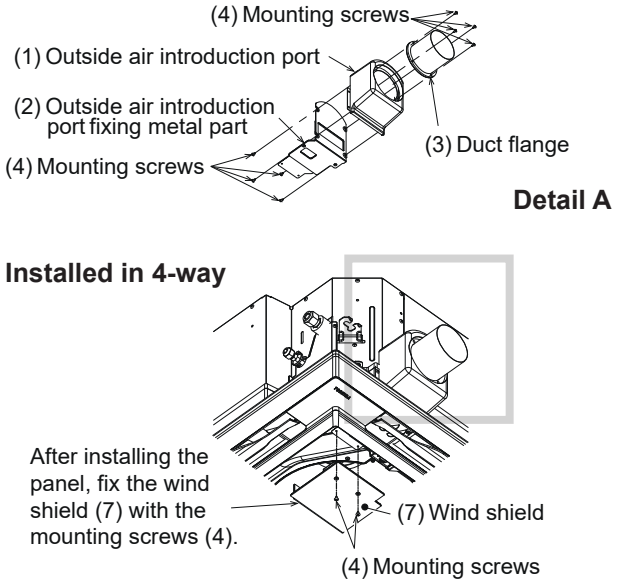

Dimension

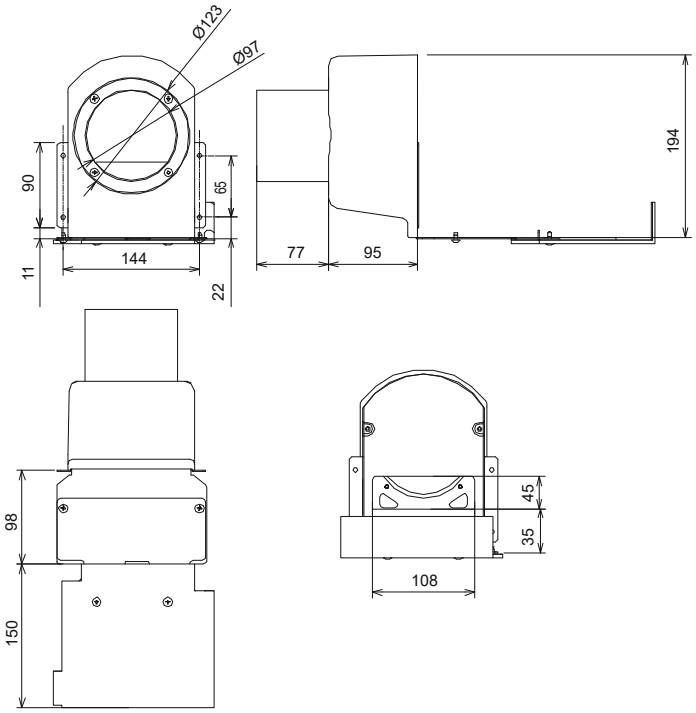

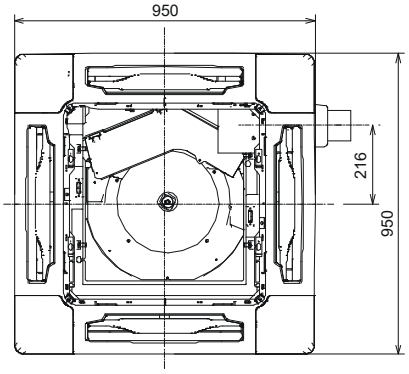

Unit: mm

NOTE

This inlet box shall be used with the fresh-air chamber.

5. Air discharge direction kit : TCB-BC1602UE

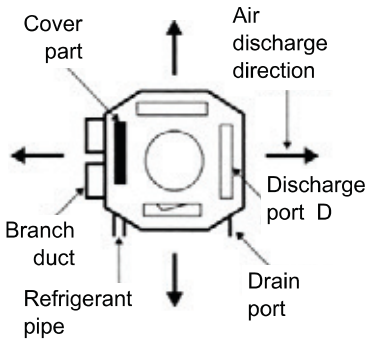

			Limited models only	
3-way air flow	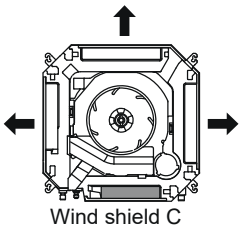	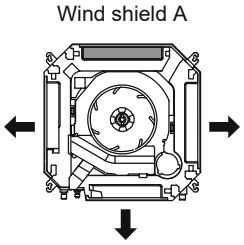	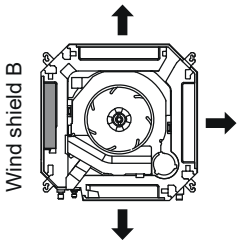	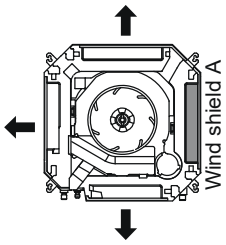
	Available for all models	Available for all models	Available only for 009 to 030 type	Available only for 036 to 056 type
2-way air flow	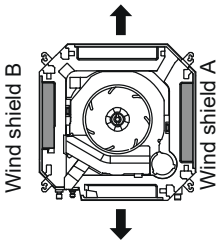	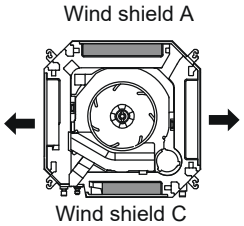	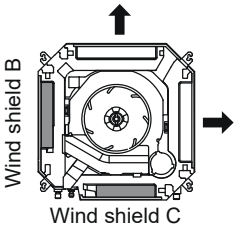	
	Available for all models	Available for all models	Available for all models	

6. Auxiliary fresh air flange : TCB-FF101URE2

Installation

1. Using the knockout of the indoor unit main body, as a marker, cut off the flange with the heat insulator (styrol) with cutting pliers or cutter.

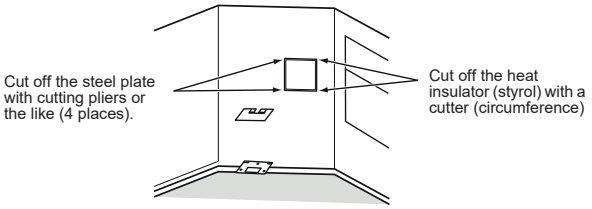

NOTE

When cutting off the styrol inside, be careful not to insert the cutter blade deeper than 30 mm. (Damage to the drain pan inside can cause water leakage.)
Wear safety globes to carry out these works. Do not attempt with bare hands.

2. A gap between the styrol and steel plate may cause a trouble such as condensation. Be sure to attach the attached heat insulator A first with it aligned to the screw hole, and then attach B, according to the right figure.
3. Install the auxiliary fresh air flange to the indoor unit main body with attached 4 fixing screws.

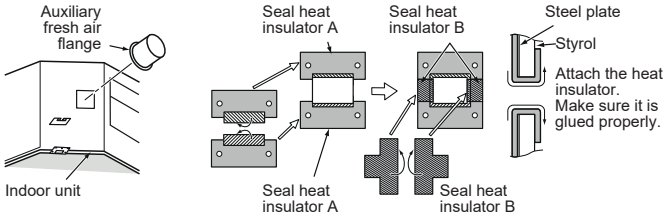

Duct fan

In order to take fresh air, provide the duct fan separately.

1. Install the filter for fresh air
2. Provide the check port beneath the duct fan for maintenance.
3. Provide the silencer to prevent the effect of noise.

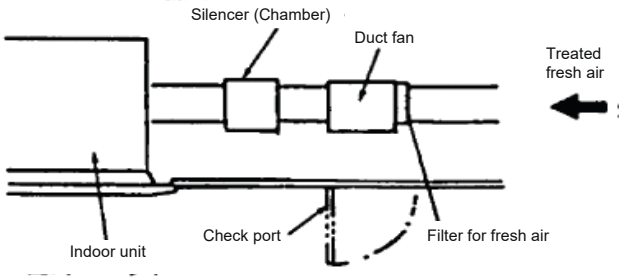

Dimension

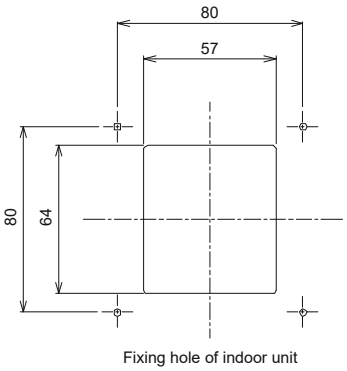

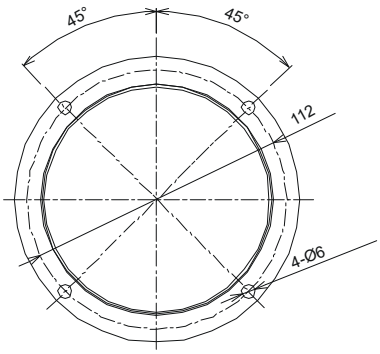

Unit : mm

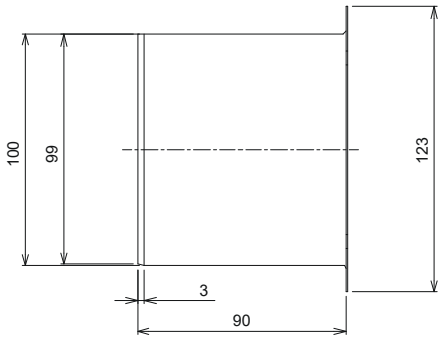

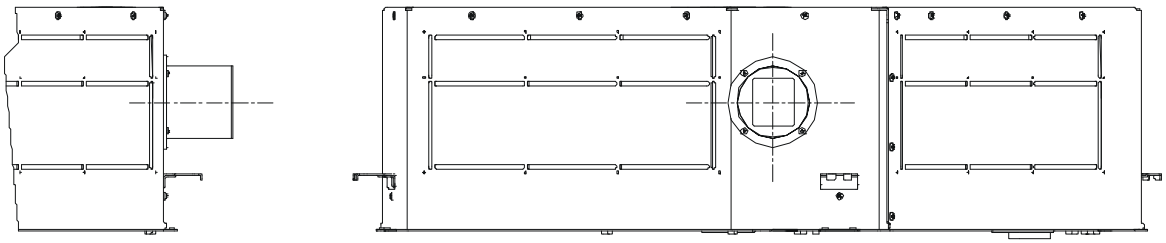

Installation status of indoor unit

7. PM2.5 filter

	TCB-PLFC1UPE-120	TCB-PLFC2UPE-80
Appearance and installation image	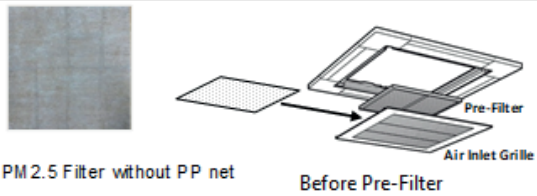 PM2.5 Filter without PP net Before Pre-Filter	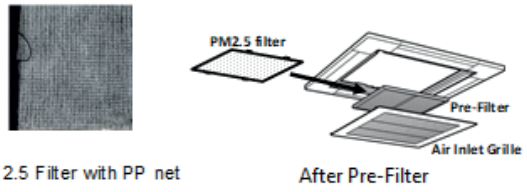 PM2.5 Filter with PP net After Pre-Filter
Replacement	Change filter	Change filter and reuse strap
Lifetime*	2-3 months	3-4 months

* Lifetime is depend on Air Quality in each area. Recommened to change PM2.5 filter when air flow, cooling or heating Capacity is not enough or filter color reach replacement index color.

Particle reduction efficiency of filter

Reference fillter specification from supplier based on JIS B9908 Standard (EFR15 is PM2.5 Filter material)

Item	Air speed	Air volume of 4-way cassette	Pressure drop	Particle reduction efficiency*		
				0.3 - 0.5 μm	0.5 - 1.0 μm	1.0 - 2.5 μm
EFR15	100 cm/sec	900 m³ /h	14 Pa	19.5 %	41.9 %	49.8 %
	200 cm/sec	1800 m³ /h	36 Pa	16.9 %	39.1 %	518 %

* PM2.5 is defined Particulate Matter with a particle size of 2.5 μm or less.
This efficiency represents ratio at which particle can be collected by 1 time filter passing.
With continuous use, it is possible to realize higher perticle collection ratio than mention ratio.

PM2.5 Filter : TCB-PLFC1UPE-120 (Before Pre-filter)

Fan Operation Mode	Factory default	High Ceiling Mode (Type3)
Air volume flow rate*	Drop 20%	Drop 10%
Cooling capacity	Drop 4%	Drop 3%
Heating capacity	Drop 2%	Drop 1%

*Air volume will vary depending on capacity of indoor unit, setting mode, operating temperature conditions.

Place the PM2.5 Filter into the Air Inlet Grille.

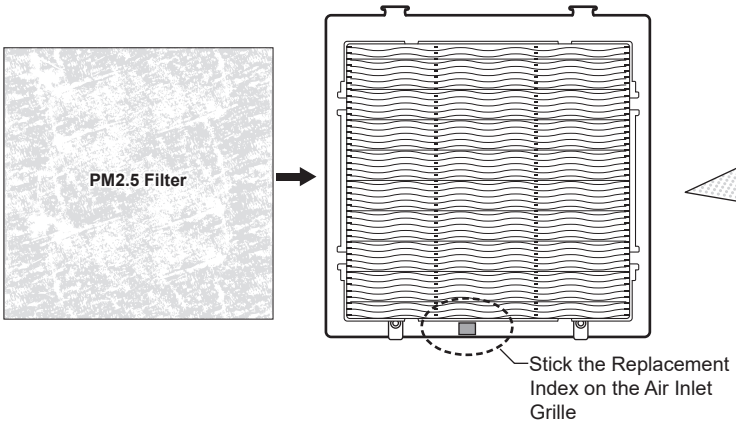

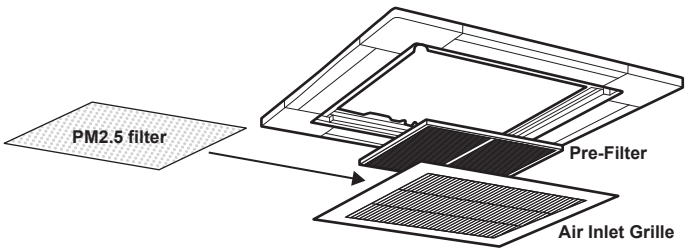

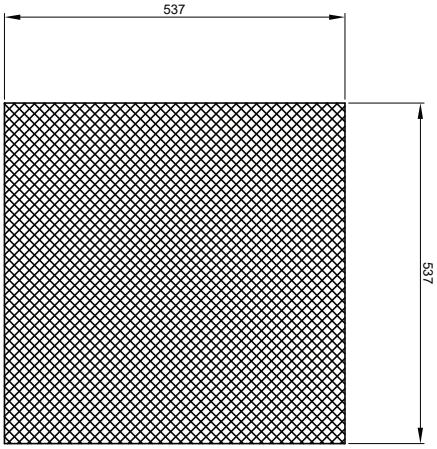

PM2.5 Filter : TCB-PLFC2UPE-80 (After Pre-filter)

Fan Operation Mode	Factory default	High Ceiling Mode (Type3)
Air volume flow rate*	Drop 25%	Drop 15%
Cooling capacity	Drop 6%	Drop 5%
Heating capacity	Drop 4%	Drop 3%

*Air volume will vary depending on capacity of indoor unit, setting mode, operating temperature conditions.

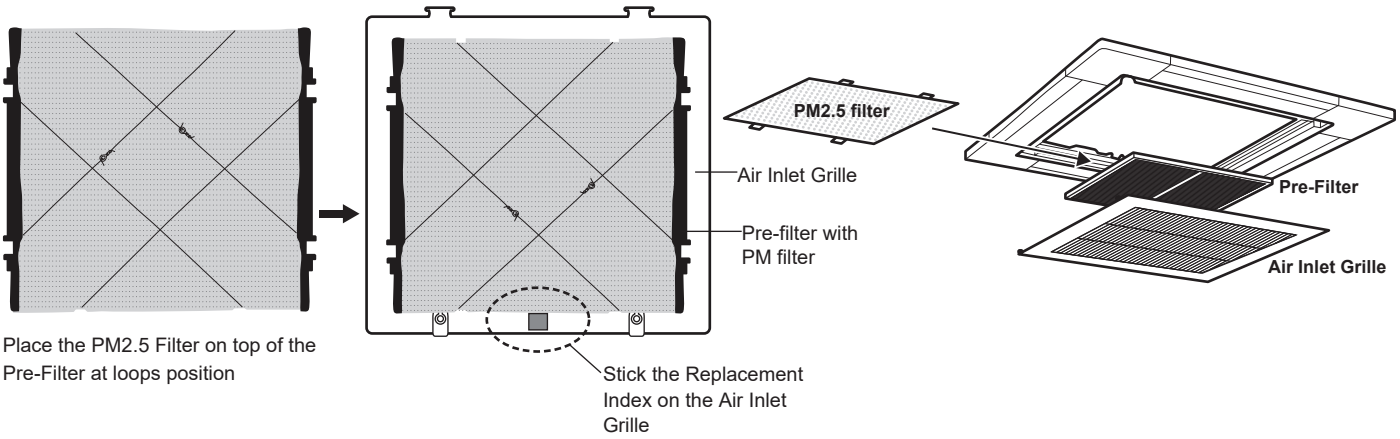

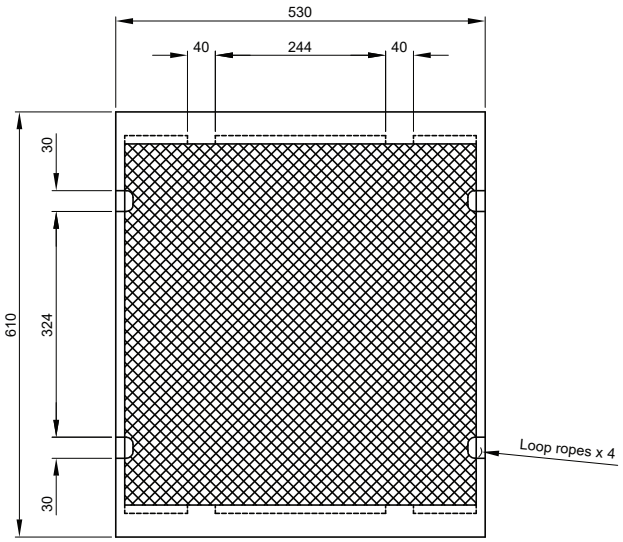

PM2.5 filter

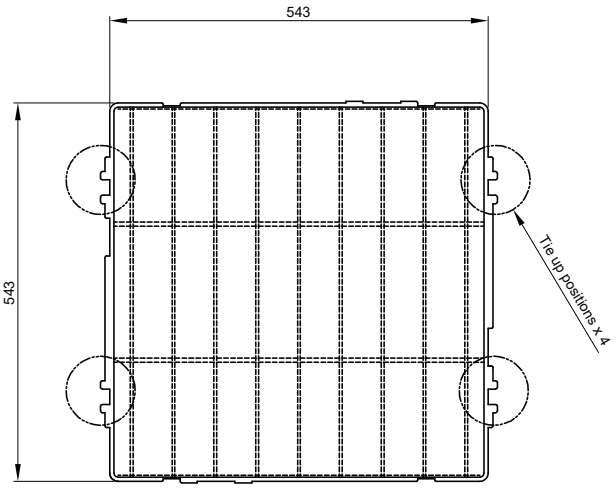

Pre-filter

2-2. Standard Duct Type

2-2-1. Specifications

2-2-2. Dimension

2-2-3. Wiring Diagrams

2-2-4. Sensible Capacity Table

2-2-5. Part Load Performance

2-2-6. Fan Static Characteristic

2-2-7. Sound Characteristics (NC Curve)

2-2-8. Accessories

2-2-1. Specifications

Model		Indoor unit		RAV-HM561BTP-E/TR	RAV-HM801BTP-E/TR	RAV-HM1101BTP-E/TR	RAV-HM1401BTP-E/TR	RAV-HM1601BTP-E/TR
		Outdoor unit		RAV-GV561ATP-E/TR	RAV-GV801ATP-E/TR	RAV-GV1101ATP-E/TR	RAV-GV1401ATP-E/TR	RAV-GV1601ATP-E1/TR
Cooling capacity		Rated	(kW)	5.0	6.7	9.5	11.5	13.0
		Min-Max	(kW)	1.5 - 5.6	1.5 - 8.0	3.0 - 11.2	3.0 - 12.0	3.0 - 14.0
Heating capacity		Rated	(kW)	5.3	7.0	10.0	11.9	13.5
		Min-Max	(kW)	1.5 - 6.3	1.5 - 9.0	3.0 -13.0	3.0 - 16.0	3.0 -18.0
Power supply				1 phase 220V-240V/50Hz, 220V/60Hz				
Electrical characteristics	Cooling	Power consumption	(kW)	1.85	2.30	3.17	4.70	5.40
		EER		2.7	2.91	3.00	2.45	2.41
		PdesignC	(kW)	5.0	6.7	9.5	11.5	13.0
		SEER	No.	5.2	5.10	5.10	5.10	4.90
			Grade (Lot10)	A	A	A	A	-
	Heating	Power consumption	(kW)	1.65	2.33	3.00	3.90	4.00
		COP		3.21	3.00	3.33	3.05	3.38
		PdesignH	(kW)	2.8	4.8	7.6	7.8	8.0
		SCOP	No.	3.90	4.00	3.80	3.80	4.15
			Grade (Lot10)	A	A+	A	A	-
Indoor unit								
Appearance		Main unit		Zinc hot dipping hot steel				
Outer dimension		Main unit	Height (mm)	275				
			Width (mm)	700	1,000	1,400		
			Depth (mm)	750				
Total weight		Main unit	(kg)	23	31	41		
Fan unit		Fan		Centrifugal fan				
		Air Flow	H/M/L (m^3/h)	800/630/480	1200/930/750	2100/1650/1260	2100/1650/1260	2100/1650/1260
External static pressure		Standard (Upper - Lower)	(Pa)	30 (150 - 30)		40 (150 - 30)	50 (150 - 30)	
Air filter				Standard filter (Long life filter)				
Sound pressure level (bottom air inlet)			H/M/L (dB)	33/29/25	34/30/26	40/36/33	40/36/33	40/36/33
Sound power level (back air inlet)			H/M/L (dB)	55/51/46	55/51/46	63/58/54	63/58/54	63/58/54
Outdoor unit								
Outer dimension		Height	(mm)	550		630	710	890
		Width	(mm)	780		800	900	900
		Depth	(mm)	290		300	320	320
Total weight		Main unit	(kg)	36	39	45	57	64
Pipe		Chargeless Length	(m)	20.0		30.0		
		Max. pipe high	(m)	20.0		30.0		
		Max. total length	(m)	30.0		30.0		
Flare Connections		Gas side	(mm)	12.7	15.9			
		Liquid side	(mm)	6.3	9.5			
Sound pressure level		Cooling/Heating	(dB)	46 / 48	48 / 52	51 / 53	53 / 60	57 / 59
Sound power level		Cooling/Heating	(dB)	63 / 65	65 / 69	68 / 70	70 / 77	74 / 76
Operating Range		Cooling	(°CDB)	-15 / 46				
		Heating	(°CWB)	-15 / 15				

2-2-2. Dimension

RAV-HM*__1BTP-E / TR (*56 / 80 / 110 / 140 / 160)

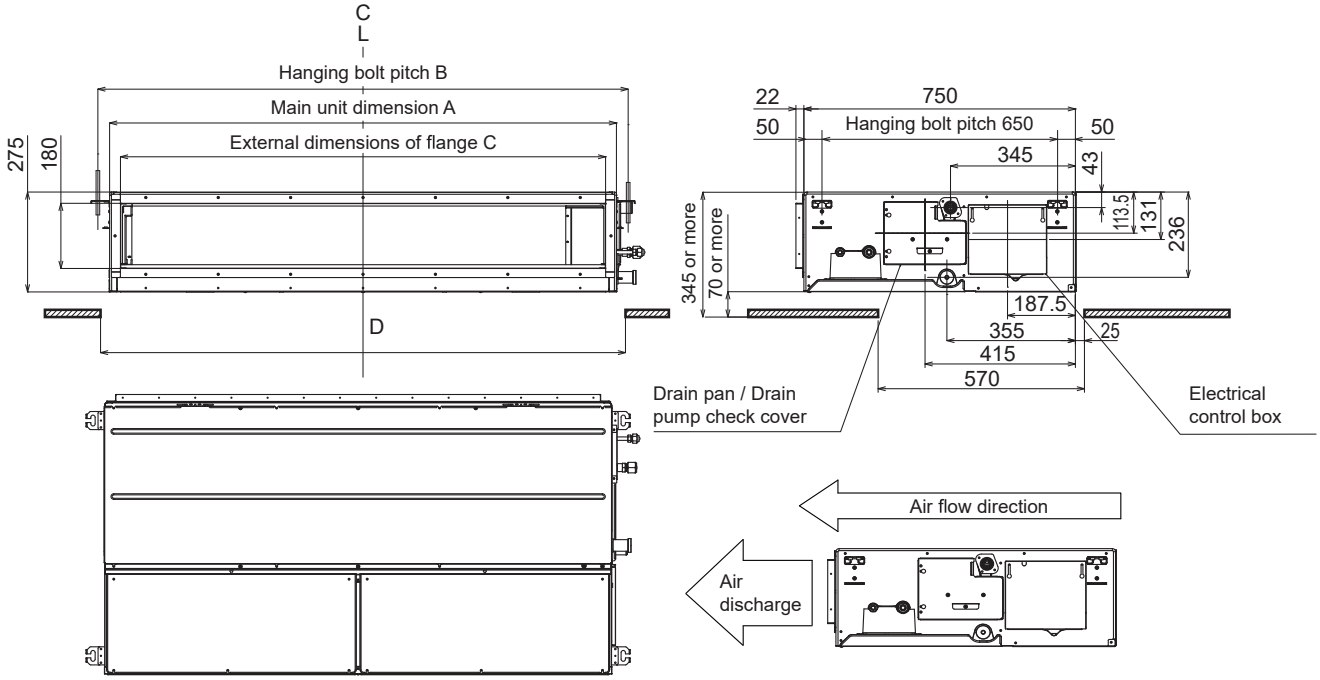

Model	A	B	C	D
HM56 type	700	765	640	750
HM80 type	1000	1005	940	1050
HM90, HM110, HM140, HM160 type	1400	1465	1340	1450

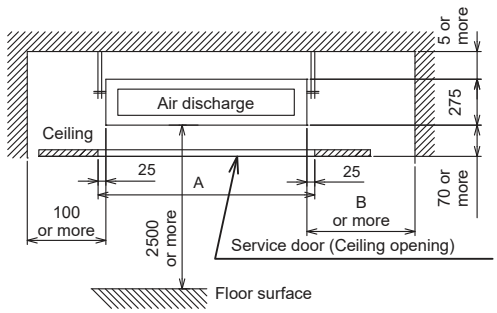

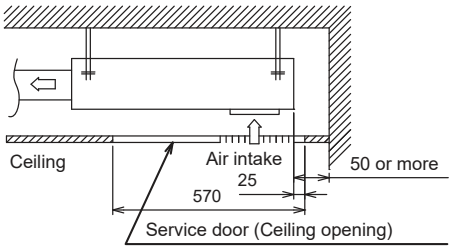

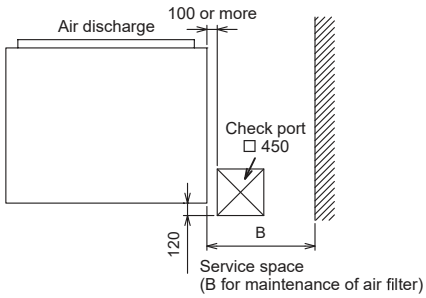

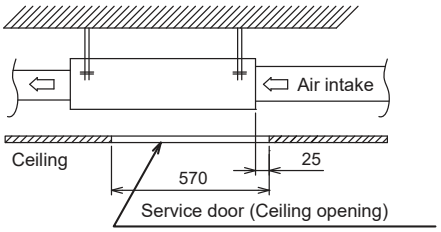

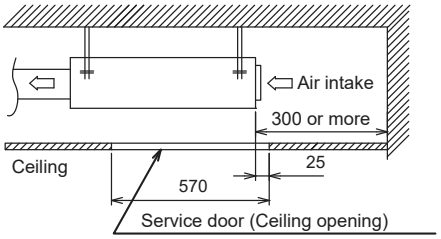

Model	A	B
HM56 type	750	700
HM80 type	1050	500
HM90, HM110, HM140, HM160 type	1450	700

HM56 type

<Under air intake>

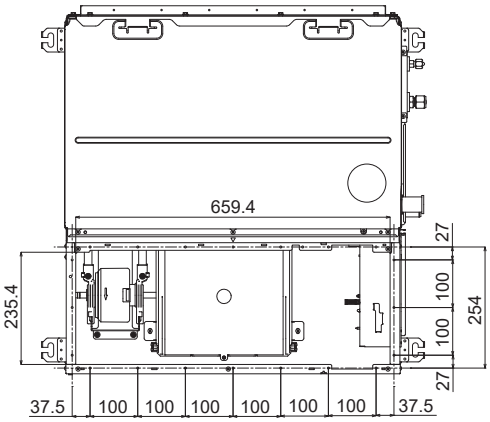

<Back air intake>

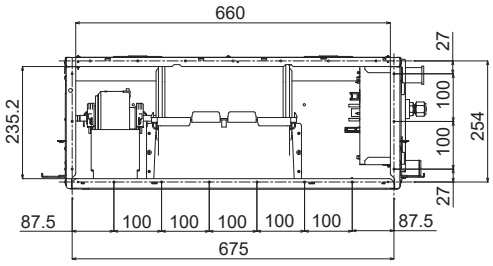

HM80 type

<Under air intake>

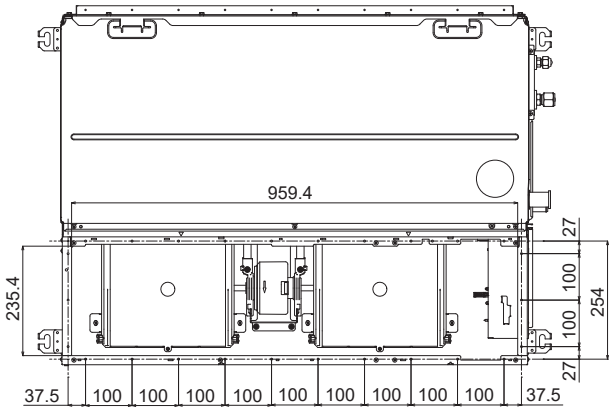

<Back air intake>

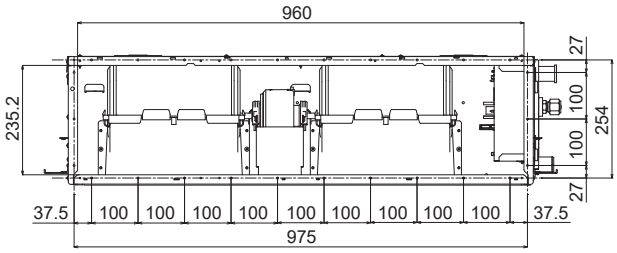

HM90, HM110, HM140, HM160 type

<Under air intake>

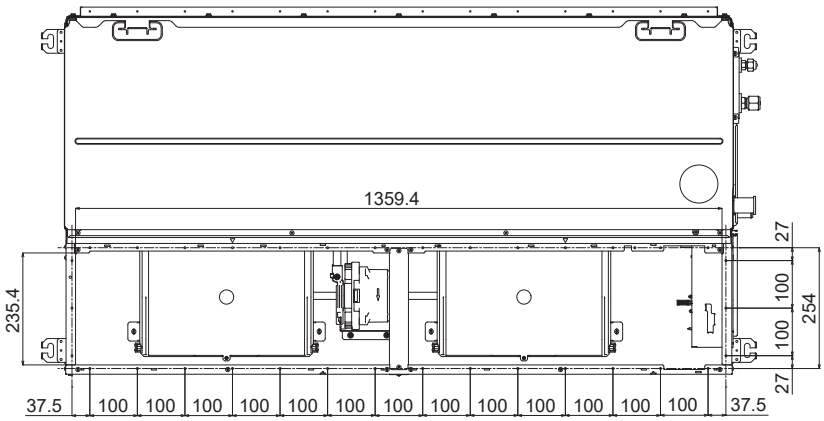

<Back air intake>

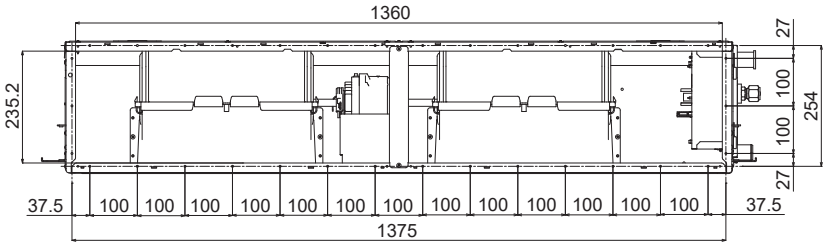

2-2-3. Wiring Diagrams

RAV-HM*__1BTP-E / TR (*56 / 80 / 110 / 140 / 160)

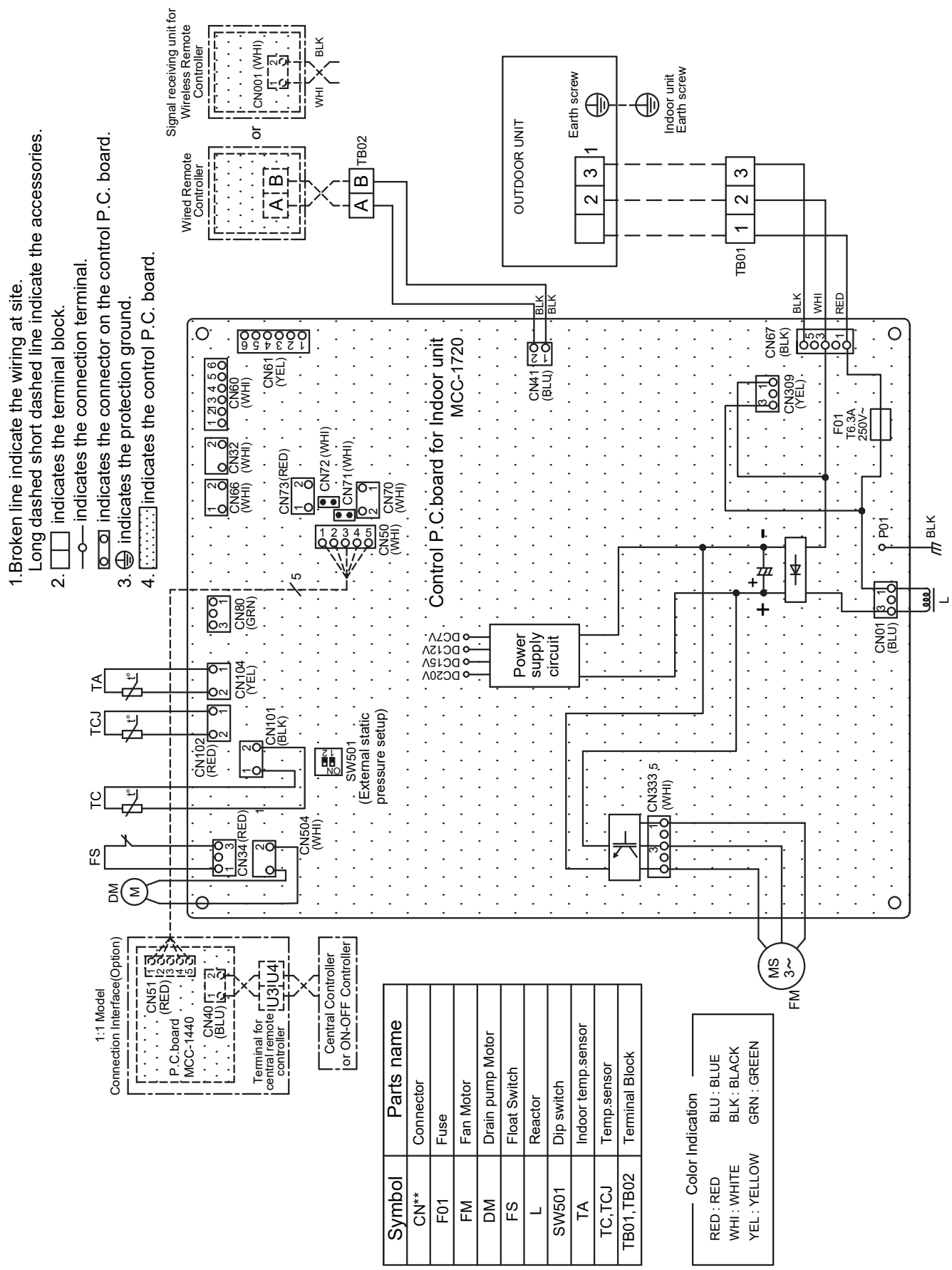

2-2-4. Sensible Capacity Table

Product models : RAV-HM561BTP-E / TR ; RAV-GV561ATP-E / TR

Specification of product at standard condition

Standard Condition		
	Indoor	27°C (DB) / 19°C (WB)
	Outdoor	35°C (DB) / 24°C (WB)

Total Cooling Capacity (TC)	5.00	kW
Sensible Heat Capacity (SHC)	3.90	kW

Outdoor air temperature	Indoor air temperature													
	20.0°C (DB) 14.0°C (WB)		23.0°C (DB) 16.0°C (WB)		26.0°C (DB) 18.0°C (WB)		27.0°C (DB) 19.0°C (WB)		28.0°C (DB) 20.0°C (WB)		30.0°C (DB) 22.0°C (WB)		32.0°C (DB) 24.0°C (WB)	
DB (°C)	TC	SHC	TC	SHC	TC	SHC	TC	SHC	TC	SHC	TC	SHC	TC	SHC
10.0	5.4	4.6	6.0	4.9	6.4	5.2	6.6	5.2	6.8	5.1	7.2	5.1	7.5	5.0
11.0	5.4	4.5	5.9	4.8	6.4	5.1	6.5	5.1	6.7	5.1	7.1	5.0	7.5	4.9
12.0	5.3	4.5	5.9	4.8	6.3	5.1	6.5	5.1	6.7	5.0	7.1	5.0	7.4	4.9
13.0	5.3	4.4	5.8	4.7	6.2	5.0	6.4	5.0	6.6	5.0	7.0	4.9	7.3	4.8
14.0	5.2	4.4	5.8	4.7	6.2	5.0	6.3	5.0	6.5	4.9	6.9	4.9	7.2	4.8
15.0	5.2	4.3	5.7	4.6	6.1	4.9	6.3	4.9	6.5	4.9	6.8	4.8	7.2	4.7
16.0	5.1	4.3	5.6	4.6	6.0	4.9	6.2	4.9	6.4	4.8	6.8	4.8	7.1	4.7
17.0	5.1	4.3	5.6	4.5	6.0	4.8	6.2	4.8	6.3	4.8	6.7	4.7	7.0	4.6
18.0	5.0	4.2	5.5	4.5	5.9	4.8	6.1	4.8	6.3	4.7	6.6	4.7	6.9	4.6
19.0	5.0	4.2	5.5	4.4	5.9	4.7	6.0	4.7	6.2	4.7	6.6	4.6	6.9	4.5
20.0	4.9	4.1	5.4	4.4	5.8	4.7	6.0	4.7	6.1	4.6	6.5	4.6	6.8	4.5
21.0	4.8	4.1	5.4	4.3	5.7	4.6	5.9	4.6	6.1	4.6	6.4	4.5	6.7	4.4
22.0	4.8	4.0	5.3	4.3	5.7	4.6	5.8	4.6	6.0	4.5	6.4	4.5	6.6	4.4
23.0	4.7	4.0	5.2	4.2	5.6	4.5	5.8	4.5	5.9	4.5	6.3	4.4	6.6	4.4
24.0	4.7	3.9	5.2	4.2	5.5	4.5	5.7	4.5	5.9	4.4	6.2	4.4	6.5	4.3
25.0	4.6	3.9	5.1	4.2	5.5	4.4	5.6	4.4	5.8	4.4	6.1	4.3	6.4	4.3
26.0	4.6	3.9	5.1	4.1	5.4	4.4	5.6	4.4	5.7	4.3	6.1	4.3	6.4	4.2
27.0	4.5	3.8	5.0	4.1	5.4	4.3	5.5	4.3	5.7	4.3	6.0	4.2	6.3	4.2
28.0	4.5	3.8	4.9	4.0	5.3	4.3	5.4	4.3	5.6	4.2	5.9	4.2	6.2	4.1
29.0	4.4	3.7	4.9	4.0	5.2	4.2	5.4	4.2	5.5	4.2	5.9	4.1	6.1	4.1
30.0	4.4	3.7	4.8	3.9	5.2	4.2	5.3	4.2	5.5	4.1	5.8	4.1	6.1	4.0
31.0	4.3	3.6	4.8	3.9	5.1	4.1	5.3	4.1	5.4	4.1	5.7	4.0	6.0	4.0
32.0	4.3	3.6	4.7	3.8	5.0	4.1	5.2	4.1	5.3	4.0	5.7	4.0	5.9	3.9
33.0	4.2	3.5	4.7	3.8	5.0	4.0	5.1	4.0	5.3	4.0	5.6	4.0	5.8	3.9
34.0	4.2	3.5	4.6	3.7	4.9	4.0	5.1	4.0	5.2	3.9	5.5	3.9	5.8	3.8
35.0	4.1	3.5	4.5	3.7	4.9	3.9	5.0	3.9	5.1	3.9	5.4	3.9	5.7	3.8
36.0	4.1	3.4	4.5	3.6	4.8	3.9	4.9	3.8	5.1	3.8	5.4	3.8	5.6	3.7
37.0	4.0	3.4	4.4	3.6	4.7	3.8	4.9	3.8	5.0	3.8	5.3	3.8	5.6	3.7
38.0	3.9	3.3	4.4	3.5	4.7	3.8	4.8	3.7	4.9	3.7	5.2	3.7	5.5	3.6
39.0	3.9	3.3	4.3	3.5	4.6	3.7	4.7	3.7	4.9	3.7	5.2	3.7	5.4	3.6
40.0	2.7	2.2	2.9	2.4	3.1	2.5	3.2	2.5	3.3	2.5	3.5	2.5	3.7	2.4
41.0	2.5	2.1	2.8	2.3	3.0	2.4	3.1	2.4	3.2	2.4	3.4	2.4	3.5	2.3
42.0	2.4	2.0	2.7	2.2	2.9	2.3	3.0	2.3	3.0	2.3	3.2	2.3	3.4	2.2
43.0	2.3	1.9	2.6	2.1	2.7	2.2	2.8	2.2	2.9	2.2	3.1	2.2	3.2	2.1
44.0	2.2	1.9	2.4	2.0	2.6	2.1	2.7	2.1	2.8	2.1	2.9	2.1	3.1	2.0
45.0	1.4	1.2	1.5	1.2	1.6	1.3	1.7	1.3	1.7	1.3	1.8	1.3	1.9	1.3
46.0	1.3	1.1	1.4	1.1	1.5	1.2	1.5	1.2	1.6	1.2	1.7	1.2	1.8	1.2

Product models : RAV-HM801BTP-E / TR ; RAV-GV801ATP-E / TR

Specification of product at standard condition

Standard Condition		
	Indoor	27°C (DB) / 19°C (WB)
	Outdoor	35°C (DB) / 24°C (WB)

Total Cooling Capacity (TC)	6.70	kW
Sensible Heat Capacity (SHC)	5.56	kW

Outdoor air temperature	Indoor air temperature													
	20.0°C (DB) 14.0°C (WB)		23.0°C (DB) 16.0°C (WB)		26.0°C (DB) 18.0°C (WB)		27.0°C (DB) 19.0°C (WB)		28.0°C (DB) 20.0°C (WB)		30.0°C (DB) 22.0°C (WB)		32.0°C (DB) 24.0°C (WB)	
DB (°C)	TC	SHC	TC	SHC	TC	SHC	TC	SHC	TC	SHC	TC	SHC	TC	SHC
10	7.3	6.5	8.0	6.9	8.6	7.4	8.9	7.3	9.1	7.3	9.6	7.3	10.1	7.2
11	7.2	6.4	7.9	6.8	8.5	7.3	8.8	7.3	9.0	7.3	9.5	7.2	10.0	7.1
12	7.1	6.4	7.9	6.8	8.4	7.2	8.7	7.2	8.9	7.2	9.5	7.2	9.9	7.0
13	7.1	6.3	7.8	6.7	8.3	7.1	8.6	7.1	8.8	7.1	9.4	7.1	9.8	7.0
14	7.0	6.2	7.7	6.6	8.3	7.1	8.5	7.1	8.8	7.1	9.3	7.0	9.7	6.9
15	6.9	6.2	7.6	6.6	8.2	7.0	8.4	7.0	8.7	7.0	9.2	6.9	9.6	6.8
16	6.8	6.1	7.6	6.5	8.1	6.9	8.3	6.9	8.6	6.9	9.1	6.9	9.5	6.8
17	6.8	6.0	7.5	6.4	8.0	6.9	8.3	6.8	8.5	6.9	9.0	6.8	9.4	6.7
18	6.7	6.0	7.4	6.4	7.9	6.8	8.2	6.8	8.4	6.8	8.9	6.7	9.3	6.6
19	6.6	5.9	7.3	6.3	7.8	6.7	8.1	6.7	8.3	6.7	8.8	6.7	9.2	6.6
20	6.6	5.8	7.2	6.2	7.8	6.6	8.0	6.6	8.2	6.6	8.7	6.6	9.1	6.5
21	6.5	5.8	7.2	6.2	7.7	6.6	7.9	6.6	8.1	6.6	8.6	6.5	9.0	6.4
22	6.4	5.7	7.1	6.1	7.6	6.5	7.8	6.5	8.0	6.5	8.5	6.5	8.9	6.3
23	6.3	5.7	7.0	6.0	7.5	6.4	7.7	6.4	8.0	6.4	8.4	6.4	8.8	6.3
24	6.3	5.6	6.9	6.0	7.4	6.4	7.7	6.3	7.9	6.4	8.3	6.3	8.7	6.2
25	6.2	5.5	6.9	5.9	7.3	6.3	7.6	6.3	7.8	6.3	8.2	6.2	8.6	6.1
26	6.1	5.5	6.8	5.8	7.3	6.2	7.5	6.2	7.7	6.2	8.1	6.2	8.5	6.1
27	6.1	5.4	6.7	5.8	7.2	6.1	7.4	6.1	7.6	6.1	8.0	6.1	8.4	6.0
28	6.0	5.3	6.6	5.7	7.1	6.1	7.3	6.1	7.5	6.1	8.0	6.0	8.3	5.9
29	5.9	5.3	6.5	5.6	7.0	6.0	7.2	6.0	7.4	6.0	7.9	6.0	8.2	5.9
30	5.9	5.2	6.5	5.6	6.9	5.9	7.1	5.9	7.3	5.9	7.8	5.9	8.1	5.8
31	5.8	5.2	6.4	5.5	6.8	5.8	7.0	5.8	7.2	5.8	7.7	5.8	8.0	5.7
32	5.7	5.1	6.3	5.4	6.8	5.8	7.0	5.8	7.2	5.8	7.6	5.7	7.9	5.6
33	5.6	5.0	6.2	5.4	6.7	5.7	6.9	5.7	7.1	5.7	7.5	5.7	7.8	5.6
34	5.6	5.0	6.2	5.3	6.6	5.6	6.8	5.6	7.0	5.6	7.4	5.6	7.7	5.5
35	5.5	4.9	6.1	5.2	6.5	5.6	6.7	5.6	6.9	5.6	7.3	5.5	7.6	5.4
36	5.4	4.8	6.0	5.2	6.4	5.5	6.6	5.5	6.8	5.5	7.2	5.5	7.5	5.4
37	5.4	4.8	5.9	5.1	6.3	5.4	6.5	5.4	6.7	5.4	7.1	5.4	7.4	5.3
38	5.3	4.7	5.8	5.0	6.3	5.3	6.4	5.3	6.6	5.3	7.0	5.3	7.3	5.2
39	5.2	4.7	5.8	5.0	6.2	5.3	6.4	5.3	6.5	5.3	6.9	5.2	7.2	5.2
40	5.2	4.6	5.7	4.9	6.1	5.2	6.3	5.2	6.4	5.2	6.8	5.2	7.1	5.1
41	5.1	4.5	5.6	4.8	6.0	5.1	6.2	5.1	6.4	5.1	6.7	5.1	7.0	5.0
42	5.0	4.5	5.5	4.8	5.9	5.1	6.1	5.1	6.3	5.1	6.6	5.0	6.9	4.9
43	4.9	4.4	5.5	4.7	5.8	5.0	6.0	5.0	6.2	5.0	6.5	5.0	6.8	4.9
44	4.9	4.3	5.4	4.6	5.8	4.9	5.9	4.9	6.1	4.9	6.5	4.9	6.8	4.8
45	4.8	4.3	5.3	4.6	5.7	4.9	5.8	4.8	6.0	4.8	6.4	4.8	6.7	4.7
46	4.7	4.2	5.2	4.5	5.6	4.8	5.8	4.8	5.9	4.8	6.3	4.7	6.6	4.7

Product models : RAV-HM1101BTP-E / TR ; RAV-GV1101ATP-E / TR

Specification of product at standard condition

Standard Condition		
	Indoor	27°C (DB) / 19°C (WB)
	Outdoor	35°C (DB) / 24°C (WB)

Total Cooling Capacity (TC)	9.50	kW
Sensible Heat Capacity (SHC)	7.89	kW

Outdoor air temperature	Indoor air temperature													
	20.0°C (DB) 14.0°C (WB)		23.0°C (DB) 16.0°C (WB)		26.0°C (DB) 18.0°C (WB)		27.0°C (DB) 19.0°C (WB)		28.0°C (DB) 20.0°C (WB)		30.0°C (DB) 22.0°C (WB)		32.0°C (DB) 24.0°C (WB)	
DB (°C)	TC	SHC	TC	SHC	TC	SHC	TC	SHC	TC	SHC	TC	SHC	TC	SHC
10	10.3	9.2	11.4	9.8	12.2	10.4	12.6	10.4	12.9	10.4	13.7	10.4	14.3	10.2
11	10.2	9.1	11.3	9.7	12.1	10.3	12.4	10.3	12.8	10.3	13.5	10.3	14.2	10.1
12	10.1	9.0	11.2	9.6	11.9	10.2	12.3	10.2	12.7	10.2	13.4	10.1	14.0	10.0
13	10.0	8.9	11.0	9.5	11.8	10.1	12.2	10.1	12.5	10.1	13.3	10.0	13.9	9.9
14	9.9	8.8	10.9	9.4	11.7	10.0	12.1	10.0	12.4	10.0	13.1	9.9	13.7	9.8
15	9.8	8.7	10.8	9.3	11.6	9.9	11.9	9.9	12.3	9.9	13.0	9.8	13.6	9.7
16	9.7	8.6	10.7	9.2	11.5	9.8	11.8	9.8	12.2	9.8	12.9	9.7	13.5	9.6
17	9.6	8.6	10.6	9.1	11.4	9.7	11.7	9.7	12.0	9.7	12.7	9.6	13.3	9.5
18	9.5	8.5	10.5	9.0	11.2	9.6	11.6	9.6	11.9	9.6	12.6	9.5	13.2	9.4
19	9.4	8.4	10.4	8.9	11.1	9.5	11.5	9.5	11.8	9.5	12.5	9.4	13.0	9.3
20	9.3	8.3	10.3	8.8	11.0	9.4	11.3	9.4	11.7	9.4	12.3	9.3	12.9	9.2
21	9.2	8.2	10.2	8.8	10.9	9.3	11.2	9.3	11.5	9.3	12.2	9.2	12.8	9.1
22	9.1	8.1	10.1	8.7	10.8	9.2	11.1	9.2	11.4	9.2	12.1	9.1	12.6	9.0
23	9.0	8.0	9.9	8.6	10.6	9.1	11.0	9.1	11.3	9.1	11.9	9.0	12.5	8.9
24	8.9	7.9	9.8	8.5	10.5	9.0	10.8	9.0	11.2	9.0	11.8	8.9	12.4	8.8
25	8.8	7.8	9.7	8.4	10.4	8.9	10.7	8.9	11.0	8.9	11.7	8.8	12.2	8.7
26	8.7	7.8	9.6	8.3	10.3	8.8	10.6	8.8	10.9	8.8	11.5	8.7	12.1	8.6
27	8.6	7.7	9.5	8.2	10.2	8.7	10.5	8.7	10.8	8.7	11.4	8.6	11.9	8.5
28	8.5	7.6	9.4	8.1	10.1	8.6	10.4	8.6	10.6	8.6	11.3	8.5	11.8	8.4
29	8.4	7.5	9.3	8.0	9.9	8.5	10.2	8.5	10.5	8.5	11.1	8.4	11.7	8.3
30	8.3	7.4	9.2	7.9	9.8	8.4	10.1	8.4	10.4	8.4	11.0	8.3	11.5	8.2
31	8.2	7.3	9.1	7.8	9.7	8.3	10.0	8.3	10.3	8.3	10.9	8.2	11.4	8.1
32	8.1	7.2	9.0	7.7	9.6	8.2	9.9	8.2	10.2	8.2	10.8	8.1	11.2	8.0
33	8.0	7.1	8.8	7.6	9.5	8.1	9.7	8.1	10.0	8.1	10.6	8.0	11.1	7.9
34	7.9	7.0	8.7	7.5	9.3	8.0	9.6	8.0	9.9	8.0	10.5	7.9	11.0	7.8
35	7.8	7.0	8.6	7.4	9.2	7.9	9.5	7.9	9.8	7.9	10.3	7.8	10.8	7.7
36	7.7	6.9	8.5	7.3	9.1	7.8	9.4	7.8	9.6	7.8	10.2	7.7	10.7	7.6
37	7.6	6.8	8.4	7.2	9.0	7.7	9.3	7.7	9.5	7.7	10.1	7.6	10.5	7.5
38	7.5	6.7	8.3	7.1	8.9	7.6	9.1	7.6	9.4	7.6	9.9	7.5	10.4	7.4
39	7.4	6.6	8.2	7.0	8.8	7.5	9.0	7.5	9.3	7.5	9.8	7.4	10.3	7.3
40	7.3	6.5	8.1	6.9	8.6	7.4	8.9	7.4	9.1	7.4	9.7	7.3	10.1	7.2
41	7.2	6.4	8.0	6.8	8.5	7.3	8.8	7.3	9.0	7.3	9.6	7.2	10.0	7.1
42	7.1	6.3	7.8	6.8	8.4	7.2	8.7	7.2	8.9	7.2	9.4	7.1	9.9	7.0
43	7.0	6.2	7.7	6.7	8.3	7.1	8.5	7.1	8.8	7.1	9.3	7.0	9.7	6.9
44	6.9	6.1	7.6	6.6	8.2	7.0	8.4	7.0	8.6	7.0	9.2	6.9	9.6	6.8
45	6.8	6.1	7.5	6.5	8.0	6.9	8.3	6.9	8.5	6.9	9.0	6.8	9.4	6.7
46	6.7	6.0	7.4	6.4	7.9	6.8	8.2	6.8	8.4	6.8	8.9	6.7	9.3	6.6

Product models : RAV-HM1401BTP-E / TR ; RAV-GV1401ATP-E / TR

Specification of product at standard condition

Standard Condition		
	Indoor	27°C (DB) / 19°C (WB)
	Outdoor	35°C (DB) / 24°C (WB)

Total Cooling Capacity (TC)	11.50	kW
Sensible Heat Capacity (SHC)	9.55	kW

Outdoor air temperature	Indoor air temperature													
	20.0°C (DB) 14.0°C (WB)		23.0°C (DB) 16.0°C (WB)		26.0°C (DB) 18.0°C (WB)		27.0°C (DB) 19.0°C (WB)		28.0°C (DB) 20.0°C (WB)		30.0°C (DB) 22.0°C (WB)		32.0°C (DB) 24.0°C (WB)	
DB (°C)	TC	SHC	TC	SHC	TC	SHC	TC	SHC	TC	SHC	TC	SHC	TC	SHC
10	12.5	11.1	13.8	11.9	14.8	12.6	15.2	12.6	15.6	12.6	16.5	12.5	17.3	12.3
11	12.4	11.0	13.6	11.7	14.6	12.5	15.0	12.5	15.5	12.5	16.4	12.4	17.1	12.2
12	12.2	10.9	13.5	11.6	14.5	12.4	14.9	12.4	15.3	12.4	16.2	12.3	17.0	12.1
13	12.1	10.8	13.4	11.5	14.3	12.3	14.8	12.2	15.2	12.2	16.1	12.2	16.8	12.0
14	12.0	10.7	13.2	11.4	14.2	12.1	14.6	12.1	15.0	12.1	15.9	12.0	16.6	11.8
15	11.9	10.6	13.1	11.3	14.0	12.0	14.5	12.0	14.9	12.0	15.7	11.9	16.5	11.7
16	11.7	10.5	13.0	11.2	13.9	11.9	14.3	11.9	14.7	11.9	15.6	11.8	16.3	11.6
17	11.6	10.4	12.8	11.1	13.8	11.8	14.2	11.8	14.6	11.8	15.4	11.7	16.1	11.5
18	11.5	10.3	12.7	10.9	13.6	11.6	14.0	11.6	14.4	11.6	15.3	11.6	16.0	11.4
19	11.4	10.1	12.6	10.8	13.5	11.5	13.9	11.5	14.3	11.5	15.1	11.4	15.8	11.2
20	11.3	10.0	12.4	10.7	13.3	11.4	13.7	11.4	14.1	11.4	14.9	11.3	15.6	11.1
21	11.1	9.9	12.3	10.6	13.2	11.3	13.6	11.3	14.0	11.3	14.8	11.2	15.5	11.0
22	11.0	9.8	12.2	10.5	13.0	11.1	13.4	11.1	13.8	11.1	14.6	11.1	15.3	10.9
23	10.9	9.7	12.0	10.4	12.9	11.0	13.3	11.0	13.6	11.0	14.5	10.9	15.1	10.8
24	10.8	9.6	11.9	10.2	12.7	10.9	13.1	10.9	13.5	10.9	14.3	10.8	14.9	10.6
25	10.7	9.5	11.8	10.1	12.6	10.8	13.0	10.8	13.4	10.8	14.1	10.7	14.8	10.5
26	10.5	9.4	11.6	10.0	12.5	10.7	12.8	10.6	13.2	10.7	14.0	10.6	14.6	10.4
27	10.4	9.3	11.5	9.9	12.3	10.5	12.7	10.5	13.0	10.5	13.8	10.5	14.4	10.3
28	10.3	9.2	11.4	9.8	12.2	10.4	12.5	10.4	12.9	10.4	13.6	10.3	14.3	10.2
29	10.2	9.1	11.2	9.7	12.0	10.3	12.4	10.3	12.7	10.3	13.5	10.2	14.1	10.0
30	10.1	9.0	11.1	9.6	11.9	10.2	12.2	10.2	12.6	10.2	13.3	10.1	13.9	9.9
31	9.9	8.8	11.0	9.4	11.7	10.0	12.1	10.0	12.4	10.0	13.2	10.0	13.8	9.8
32	9.8	8.7	10.8	9.3	11.6	9.9	11.9	9.9	12.3	9.9	13.0	9.8	13.6	9.7
33	9.7	8.6	10.7	9.2	11.5	9.8	11.8	9.8	12.1	9.8	12.9	9.7	13.4	9.6
34	9.6	8.5	10.6	9.1	11.3	9.7	11.7	9.7	12.0	9.7	12.7	9.6	13.3	9.4
35	9.4	8.4	10.4	9.0	11.2	9.6	11.5	9.5	11.8	9.5	12.5	9.5	13.1	9.3
36	9.3	8.3	10.3	8.9	11.0	9.4	11.4	9.4	11.7	9.4	12.4	9.4	12.9	9.2
37	9.2	8.2	10.2	8.7	10.9	9.3	11.2	9.3	11.5	9.3	12.2	9.2	12.8	9.1
38	9.1	8.1	10.0	8.6	10.7	9.2	11.1	9.2	11.4	9.2	12.0	9.1	12.6	9.0
39	9.0	8.0	9.9	8.5	10.6	9.1	10.9	9.1	11.2	9.1	11.9	9.0	12.4	8.8
40	8.8	7.9	9.8	8.4	10.5	8.9	10.8	8.9	11.1	8.9	11.7	8.9	12.3	8.7
41	8.7	7.8	9.6	8.3	10.3	8.8	10.6	8.8	10.9	8.8	11.6	8.8	12.1	8.6
42	8.6	7.7	9.5	8.2	10.2	8.7	10.5	8.7	10.8	8.7	11.4	8.6	11.9	8.5
43	8.5	7.6	9.4	8.1	10.0	8.6	10.3	8.6	10.6	8.6	11.2	8.5	11.8	8.4
44	8.4	7.4	9.2	7.9	9.9	8.4	10.2	8.4	10.5	8.4	11.1	8.4	11.6	8.2
45	8.2	7.3	9.1	7.8	9.7	8.3	10.0	8.3	10.3	8.3	10.9	8.3	11.4	8.1
46	8.1	7.2	9.0	7.7	9.6	8.2	9.9	8.2	10.2	8.2	10.8	8.1	11.3	8.0

Product models : RAV-HM1601BTP-E / TR ; RAV-GV1601ATP-E1 / TR

Specification of product at standard condition

Standard Condition		
	Indoor	27°C (DB) / 19°C (WB)
	Outdoor	35°C (DB) / 24°C (WB)

Total Cooling Capacity (TC)	13.00	kW
Sensible Heat Capacity (SHC)	10.79	kW

Outdoor air temperature	Indoor air temperature													
	20.0°C (DB) 14.0°C (WB)		23.0°C (DB) 16.0°C (WB)		26.0°C (DB) 18.0°C (WB)		27.0°C (DB) 19.0°C (WB)		28.0°C (DB) 20.0°C (WB)		30.0°C (DB) 22.0°C (WB)		32.0°C (DB) 24.0°C (WB)	
DB (°C)	TC	SHC	TC	SHC	TC	SHC	TC	SHC	TC	SHC	TC	SHC	TC	SHC
10	14.1	12.6	15.6	13.4	16.7	14.3	17.2	14.3	17.7	14.3	18.7	14.2	19.6	13.9
11	14.0	12.4	15.4	13.3	16.5	14.1	17.0	14.1	17.5	14.1	18.5	14.0	19.4	13.8
12	13.8	12.3	15.3	13.2	16.4	14.0	16.8	14.0	17.3	14.0	18.3	13.9	19.2	13.7
13	13.7	12.2	15.1	13.0	16.2	13.8	16.7	13.8	17.1	13.8	18.2	13.7	19.0	13.5
14	13.6	12.1	15.0	12.9	16.0	13.7	16.5	13.7	17.0	13.7	18.0	13.6	18.8	13.4
15	13.4	12.0	14.8	12.8	15.9	13.6	16.3	13.6	16.8	13.6	17.8	13.5	18.6	13.3
16	13.3	11.8	14.7	12.6	15.7	13.4	16.2	13.4	16.6	13.4	17.6	13.3	18.4	13.1
17	13.1	11.7	14.5	12.5	15.5	13.3	16.0	13.3	16.5	13.3	17.4	13.2	18.2	13.0
18	13.0	11.6	14.4	12.4	15.4	13.2	15.8	13.1	16.3	13.2	17.3	13.1	18.0	12.8
19	12.9	11.5	14.2	12.2	15.2	13.0	15.7	13.0	16.1	13.0	17.1	12.9	17.9	12.7
20	12.7	11.3	14.1	12.1	15.1	12.9	15.5	12.9	15.9	12.9	16.9	12.8	17.7	12.6
21	12.6	11.2	13.9	12.0	14.9	12.7	15.3	12.7	15.8	12.7	16.7	12.7	17.5	12.4
22	12.5	11.1	13.8	11.8	14.7	12.6	15.2	12.6	15.6	12.6	16.5	12.5	17.3	12.3
23	12.3	11.0	13.6	11.7	14.6	12.5	15.0	12.5	15.4	12.5	16.3	12.4	17.1	12.2
24	12.2	10.9	13.5	11.6	14.4	12.3	14.8	12.3	15.3	12.3	16.2	12.2	16.9	12.0
25	12.0	10.7	13.3	11.5	14.3	12.2	14.7	12.2	15.1	12.2	16.0	12.1	16.7	11.9
26	11.9	10.6	13.2	11.3	14.1	12.0	14.5	12.0	14.9	12.0	15.8	12.0	16.5	11.8
27	11.8	10.5	13.0	11.2	13.9	11.9	14.3	11.9	14.7	11.9	15.6	11.8	16.3	11.6
28	11.6	10.4	12.9	11.1	13.8	11.8	14.2	11.8	14.6	11.8	15.4	11.7	16.1	11.5
29	11.5	10.2	12.7	10.9	13.6	11.6	14.0	11.6	14.4	11.6	15.3	11.5	16.0	11.4
30	11.4	10.1	12.5	10.8	13.4	11.5	13.8	11.5	14.2	11.5	15.1	11.4	15.8	11.2
31	11.2	10.0	12.4	10.7	13.3	11.4	13.7	11.3	14.1	11.4	14.9	11.3	15.6	11.1
32	11.1	9.9	12.2	10.5	13.1	11.2	13.5	11.2	13.9	11.2	14.7	11.1	15.4	10.9
33	10.9	9.8	12.1	10.4	12.9	11.1	13.3	11.1	13.7	11.1	14.5	11.0	15.2	10.8
34	10.8	9.6	11.9	10.3	12.8	10.9	13.2	10.9	13.5	10.9	14.3	10.9	15.0	10.7
35	10.7	9.5	11.8	10.2	12.6	10.8	13.0	10.8	13.4	10.8	14.2	10.7	14.8	10.5
36	10.5	9.4	11.6	10.0	12.5	10.7	12.8	10.6	13.2	10.7	14.0	10.6	14.6	10.4
37	10.4	9.3	11.5	9.9	12.3	10.5	12.7	10.5	13.0	10.5	13.8	10.5	14.4	10.3
38	10.3	9.1	11.3	9.8	12.1	10.4	12.5	10.4	12.9	10.4	13.6	10.3	14.2	10.1
39	10.1	9.0	11.2	9.6	12.0	10.2	12.3	10.2	12.7	10.2	13.4	10.2	14.0	10.0
40	10.0	8.9	11.0	9.5	11.8	10.1	12.2	10.1	12.5	10.1	13.3	10.0	13.9	9.9
41	9.9	8.8	10.9	9.4	11.7	10.0	12.0	10.0	12.3	10.0	13.1	9.9	13.7	9.7
42	9.7	8.7	10.7	9.2	11.5	9.8	11.8	9.8	12.2	9.8	12.9	9.8	13.5	9.6
43	9.6	8.5	10.6	9.1	11.3	9.7	11.7	9.7	12.0	9.7	12.7	9.6	13.3	9.5
44	9.4	8.4	10.4	9.0	11.2	9.6	11.5	9.5	11.8	9.5	12.5	9.5	13.1	9.3
45	9.3	8.3	10.3	8.8	11.0	9.4	11.3	9.4	11.7	9.4	12.3	9.3	12.9	9.2
46	9.2	8.2	10.1	8.7	10.8	9.3	11.2	9.3	11.5	9.3	12.2	9.2	12.7	9.1

2-2-5. Part load performance

Combination

Indoor units : RAV-HM561BTP-E / TR

Outdoor unit : RAV-GV561ATP-E / TR

	Cooling		Heating	
	Capacity [Q (W)]	Power consumption [W (W)]	Capacity [Q (W)]	Power consumption [W (W)]
MINIMUM	1500	320	1500	320
RATING	5000	1850	5300	1650

Cooling

Outdoor temperature (°C)		Load(%)									
		100	90	80	70	60	50	40	30	20	10
46	Q	1534	1388	1234	1080	926	771	617	463	463	463
	W	1122	989	857	724	592	459	327	194	194	194
43	Q	2823	2541	2258	1976	1694	1411	1129	847	847	847
	W	1445	1275	1104	993	762	592	421	250	250	250
40	Q	3230	2907	2584	2261	1938	1615	1292	969	969	969
	W	1445	1275	1104	993	762	592	421	250	250	250
35	Q	5000	4500	4000	3500	3000	2500	2000	1500	1500	1500
	W	1850	1631	1413	1194	976	757	539	320	320	320
30	Q	5321	4789	4257	3725	3193	2660	2128	1596	1596	1596
	W	1717	1515	1312	1109	906	703	500	297	297	297
25	Q	5642	5078	4513	3949	3385	2821	2257	1693	1693	1693
	W	1585	1398	1210	1023	836	649	461	274	274	274
20	Q	5963	5366	4770	4174	3578	2981	2385	1789	1789	1789
	W	1452	1281	1109	938	766	594	423	251	251	251

Heating

Outdoor temperature (°C)		Load(%)									
		100	90	80	70	60	50	40	30	20	10
20	Q	7078	6370	5662	4955	4247	3539	2831	2123	2003	2003
	W	1982	1759	1536	1314	1091	868	645	422	384	384
15	Q	6394	5755	5115	4476	3837	3197	2558	1918	1810	1810
	W	1854	1646	1437	1229	1020	812	604	395	360	360
10	Q	5710	5139	4568	3997	3426	2855	2284	1713	1616	1616
	W	1727	1533	1338	1144	950	756	562	368	335	335
7	Q	5300	4770	4240	3710	3180	2650	2120	1590	1500	1500
	W	1650	1465	1279	1094	908	723	537	352	320	320
6	Q	5163	4647	4131	3614	3098	2582	2065	1549	1461	1461
	W	1624	1442	1259	1077	894	711	529	346	315	315
5	Q	4029	3626	3223	2821	2418	2015	1612	1209	1140	1140
	W	1519	1348	1178	1007	836	665	494	324	295	295
2	Q	3841	3457	3072	2688	2304	1920	1536	1152	1087	1087
	W	1460	1296	1132	968	804	639	475	311	283	283
0	Q	3787	3409	3030	2651	2272	1894	1515	1136	1072	1072
	W	1417	1258	1099	939	780	621	461	302	275	275
-5	Q	3654	3288	2923	2558	2192	1827	1462	1096	1034	1034
	W	1310	1163	1015	868	721	574	426	279	254	254
-7	Q	3601	3240	2880	2520	2160	1800	1440	1080	1019	1019
	W	1267	1125	982	840	697	555	412	270	246	246

Combination

Indoor units : RAV-HM801BTP-E / TR

Outdoor unit : RAV-GV801ATP-E / TR

	Cooling		Heating	
	Capacity [Q (W)]	Power consumption [W (W)]	Capacity [Q (W)]	Power consumption [W (W)]
MINIMUM	1500	310	1500	310
RATING	6700	2300	7000	2330

Cooling

Outdoor temperature (°C)		Load(%)									
		100	90	80	70	60	50	40	30	20	10
46	Q	5750	4840	4310	3770	3230	2700	2160	1610	1200	1200
	W	2660	2540	2220	1900	1570	1260	940	640	380	380
43	Q	6010	5410	4810	4210	3610	3010	2400	1800	1350	1350
	W	2560	2270	2000	1710	1420	1140	850	570	350	350
40	Q	6270	5640	5020	4390	3760	3140	2510	1880	1400	1400
	W	2460	2190	1920	1640	1360	1090	810	550	330	330
35	Q	6700	6030	5360	4690	4020	3350	2680	2010	1500	1500
	W	2300	2040	1790	1530	1270	1020	760	510	310	310
30	Q	7130	6420	5700	4990	4280	3560	2850	2140	1600	1600
	W	2140	1890	1660	1420	1180	950	710	470	290	290
25	Q	7560	6800	6050	5290	4540	3780	3020	2270	1690	1690
	W	1970	1750	1530	1310	1090	870	650	440	270	270
20	Q	7990	7190	6390	5590	4790	3990	3200	2400	1790	1790
	W	1810	1600	1410	1200	1000	800	600	400	240	240

Heating

Outdoor temperature (°C)		Load(%)									
		100	90	80	70	60	50	40	30	20	10
20	Q	8800	7920	7040	6160	5280	4400	3520	2640	1890	1890
	W	2570	2280	2010	1720	1430	1150	870	580	340	340
15	Q	8110	7300	6490	5670	4860	4050	3240	2430	1740	1740
	W	2480	2200	1930	1660	1380	1110	840	560	330	330
10	Q	7420	6670	5930	5190	4450	3710	2970	2220	1590	1590
	W	2380	2120	1860	1600	1330	1060	810	540	320	320
7	Q	7000	6300	5600	4900	4200	3500	2800	2100	1500	1500
	W	2330	2070	1820	1560	1300	1040	790	530	310	310
6	Q	5970	5380	4780	4180	3580	2990	2390	1790	1280	1280
	W	2170	1930	1700	1450	1210	970	740	490	290	290
5	Q	5620	5060	4500	3930	3370	2810	2250	1680	1200	1200
	W	2160	1920	1690	1440	1200	960	730	490	290	290
2	Q	5090	4580	4070	3560	3050	2550	2040	1530	1090	1090
	W	2070	1840	1620	1380	1150	920	700	470	280	280
0	Q	4730	4270	3790	3320	2840	2370	1900	1420	1020	1020
	W	2010	1780	1570	1340	1120	900	680	450	270	270
-5	Q	3850	3470	3080	2700	2310	1930	1540	1160	830	830
	W	1860	1650	1460	1240	1040	830	630	420	250	250
-7	Q	3500	3150	2800	2450	2100	1750	1400	1050	750	750
	W	1800	1600	1410	1200	1000	800	610	410	240	240

Combination

Indoor units : RAV-HM1101BTP-E / TR

Outdoor unit : RAV-GV1101ATP-E / TR

	Cooling		Heating	
	Capacity [Q (W)]	Power consumption [W (W)]	Capacity [Q (W)]	Power consumption [W (W)]
MINIMUM	3000	600	3000	600
RATING	9500	3170	10000	3000

Cooling

Outdoor temperature (°C)		Load(%)									
		100	90	80	70	60	50	40	30	20	10
46	Q	8160	6870	6110	5340	4580	3820	3060	2410	2410	2410
	W	3670	3460	3000	2540	2070	1600	1150	740	740	740
43	Q	8520	7670	6820	5970	5110	4260	3410	2690	2690	2690
	W	3530	3110	2700	2270	1860	1440	1030	670	670	670
40	Q	8890	8000	7110	6220	5330	4450	3560	2810	2810	2810
	W	3400	2990	2590	2190	1790	1380	990	640	640	640
35	Q	9500	8550	7600	6650	5700	4750	3800	3000	3000	3000
	W	3170	2790	2420	2040	1670	1290	920	600	600	600
30	Q	10110	9100	8090	7080	6070	5050	4040	3190	3190	3190
	W	2940	2590	2250	1890	1550	1200	850	560	560	560
25	Q	10720	9650	8580	7500	6430	5360	4290	3390	3390	3390
	W	2720	2390	2070	1750	1430	1110	790	510	510	510
20	Q	11330	10200	9060	7930	6800	5660	4530	3580	3580	3580
	W	2490	2190	1900	1600	1310	1010	720	470	470	470

Heating

Outdoor temperature (°C)		Load(%)									
		100	90	80	70	60	50	40	30	20	10
20	Q	12570	11310	10060	8800	7540	6280	5030	3770	3770	3770
	W	3300	2930	2540	2170	1800	1420	1040	660	660	660
15	Q	11580	10420	9270	8110	6950	5790	4630	3470	3470	3470
	W	3190	2830	2450	2090	1730	1370	1000	640	640	640
10	Q	10590	9530	8470	7420	6360	5300	4240	3180	3180	3180
	W	3070	2720	2360	2020	1670	1320	960	610	610	610
7	Q	10000	9000	8000	7000	6000	5000	4000	3000	3000	3000
	W	3000	2660	2310	1970	1630	1290	940	600	600	600
6	Q	8530	7680	6830	5970	5120	4270	3410	2560	2560	2560
	W	2800	2480	2150	1840	1520	1200	880	560	560	560
5	Q	8030	7230	6430	5620	4820	4020	3210	2410	2410	2410
	W	2780	2460	2140	1830	1510	1190	870	560	560	560
2	Q	7270	6550	5820	5090	4360	3640	2910	2180	2180	2180
	W	2670	2360	2050	1750	1450	1140	840	530	530	530
0	Q	6770	6090	5420	4730	4060	3390	2700	2030	2030	2030
	W	2590	2290	1990	1700	1410	1110	810	520	520	520
-5	Q	5500	4960	4410	3850	3300	2760	2200	1650	1650	1650
	W	2400	2120	1840	1580	1300	1030	750	480	480	480
-7	Q	5000	4500	4000	3500	3000	2500	2000	1500	1500	1500
	W	2320	2060	1780	1530	1260	1000	730	460	460	460

Combination

Indoor units : RAV-HM1401BTP-E / TR

Outdoor unit : RAV-GV1401ATP-E / TR

	Cooling		Heating	
	Capacity [Q (W)]	Power consumption [W (W)]	Capacity [Q (W)]	Power consumption [W (W)]
MINIMUM	3000	600	3000	600
RATING	11500	4600	11900	3800

Cooling

Outdoor temperature (°C)		Load(%)									
		100	90	80	70	60	50	40	30	20	10
46	Q	9880	8320	7390	6470	5550	4620	3690	2770	2410	2410
	W	5330	5040	4360	3690	3020	2350	1680	1010	740	740
43	Q	10320	9290	8260	7220	6190	5160	4130	3100	2690	2690
	W	5130	4530	3920	3320	2720	2110	1500	900	670	670
40	Q	10760	9690	8610	7530	6460	5380	4300	3230	2810	2810
	W	4930	4350	3770	3190	2610	2030	1450	870	640	640
35	Q	11500	10350	9200	8050	6900	5750	4600	3450	3000	3000
	W	4600	4060	3520	2980	2440	1890	1350	810	600	600
30	Q	12240	11010	9790	8570	7340	6120	4900	3670	3190	3190
	W	4270	3770	3270	2770	2270	1750	1250	750	560	560
25	Q	12980	11680	10380	9080	7790	6490	5190	3890	3390	3390
	W	3940	3480	3020	2550	2090	1620	1160	690	510	510
20	Q	13710	12340	10970	9600	8230	6860	5490	4110	3580	3580
	W	3610	3190	2760	2340	1920	1480	1060	640	470	470

Heating

Outdoor temperature (°C)		Load(%)									
		100	90	80	70	60	50	40	30	20	10
20	Q	14960	13460	11970	10470	8970	7480	5980	4490	3770	3770
	W	4190	3710	3240	2780	2300	1830	1360	880	660	660
15	Q	13780	12400	11030	9650	8270	6890	5510	4130	3470	3470
	W	4040	3580	3120	2680	2220	1760	1310	850	640	640
10	Q	12610	11350	10080	8820	7560	6300	5040	3780	3180	3180
	W	3890	3450	3010	2580	2140	1700	1260	820	610	610
7	Q	11900	10710	9520	8330	7140	5950	4760	3570	3000	3000
	W	3800	3370	2940	2520	2090	1660	1230	800	600	600
6	Q	10150	9140	8120	7110	6090	5080	4060	3050	2560	2560
	W	3540	3140	2740	2350	1950	1550	1150	750	560	560
5	Q	9550	8600	7640	6690	5730	4780	3820	2870	2410	2410
	W	3520	3120	2720	2330	1940	1540	1140	740	560	560
2	Q	8650	7790	6920	6060	5190	4330	3460	2600	2180	2180
	W	3370	2990	2610	2240	1860	1480	1090	710	530	530
0	Q	8050	7250	6440	5640	4830	4030	3220	2420	2030	2030
	W	3270	2900	2530	2170	1800	1430	1060	690	520	520
-5	Q	6550	5900	5240	4590	3930	3280	2620	1970	1650	1650
	W	3030	2690	2350	2010	1670	1330	980	640	480	480
-7	Q	5950	5360	4760	4170	3570	2980	2380	1790	1500	1500
	W	2940	2600	2270	1950	1620	1290	950	620	460	460

Combination

Indoor units : RAV-HM1601BTP-E / TR

Outdoor unit : RAV-GV1601ATP-E1 / TR

	Cooling		Heating	
	Capacity [Q (W)]	Power consumption [W (W)]	Capacity [Q (W)]	Power consumption [W (W)]
MINIMUM	3000	600	3000	600
RATING	9500	3170	10000	3000

Cooling

Outdoor temperature (℃)		Load(%)									
		100	90	80	70	60	50	40	30	20	10
46	Q	8160	6870	6110	5340	4580	3820	3060	2410	2410	2410
	W	3670	3460	3000	2540	2070	1600	1150	740	740	740
43	Q	8520	7670	6820	5970	5110	4260	3410	2690	2690	2690
	W	3530	3110	2700	2270	1860	1440	1030	670	670	670
40	Q	8890	8000	7110	6220	5330	4450	3560	2810	2810	2810
	W	3400	2990	2590	2190	1790	1380	990	640	640	640
35	Q	9500	8550	7600	6650	5700	4750	3800	3000	3000	3000
	W	3170	2790	2420	2040	1670	1290	920	600	600	600
30	Q	10110	9100	8090	7080	6070	5050	4040	3190	3190	3190
	W	2940	2590	2250	1890	1550	1200	850	560	560	560
25	Q	10720	9650	8580	7500	6430	5360	4290	3390	3390	3390
	W	2720	2390	2070	1750	1430	1110	790	510	510	510
20	Q	11330	10200	9060	7930	6800	5660	4530	3580	3580	3580
	W	2490	2190	1900	1600	1310	1010	720	470	470	470

Heating

Outdoor temperature (℃)		Load(%)									
		100	90	80	70	60	50	40	30	20	10
20	Q	12570	11310	10060	8800	7540	6280	5030	3770	3770	3770
	W	3300	2930	2540	2170	1800	1420	1040	660	660	660
15	Q	11580	10420	9270	8110	6950	5790	4630	3470	3470	3470
	W	3190	2830	2450	2090	1730	1370	1000	640	640	640
10	Q	10590	9530	8470	7420	6360	5300	4240	3180	3180	3180
	W	3070	2720	2360	2020	1670	1320	960	610	610	610
7	Q	10000	9000	8000	7000	6000	5000	4000	3000	3000	3000
	W	3000	2660	2310	1970	1630	1290	940	600	600	600
6	Q	8530	7680	6830	5970	5120	4270	3410	2560	2560	2560
	W	2800	2480	2150	1840	1520	1200	880	560	560	560
5	Q	8030	7230	6430	5620	4820	4020	3210	2410	2410	2410
	W	2780	2460	2140	1830	1510	1190	870	560	560	560
2	Q	7270	6550	5820	5090	4360	3640	2910	2180	2180	2180
	W	2670	2360	2050	1750	1450	1140	840	530	530	530
0	Q	6770	6090	5420	4730	4060	3390	2700	2030	2030	2030
	W	2590	2290	1990	1700	1410	1110	810	520	520	520
-5	Q	5500	4960	4410	3850	3300	2760	2200	1650	1650	1650
	W	2400	2120	1840	1580	1300	1030	750	480	480	480
-7	Q	5000	4500	4000	3500	3000	2500	2000	1500	1500	1500
	W	2320	2060	1780	1530	1260	1000	730	460	460	460

2-2-6. Air Throw Distance Chart

RAV-HM561BTP-E / TR

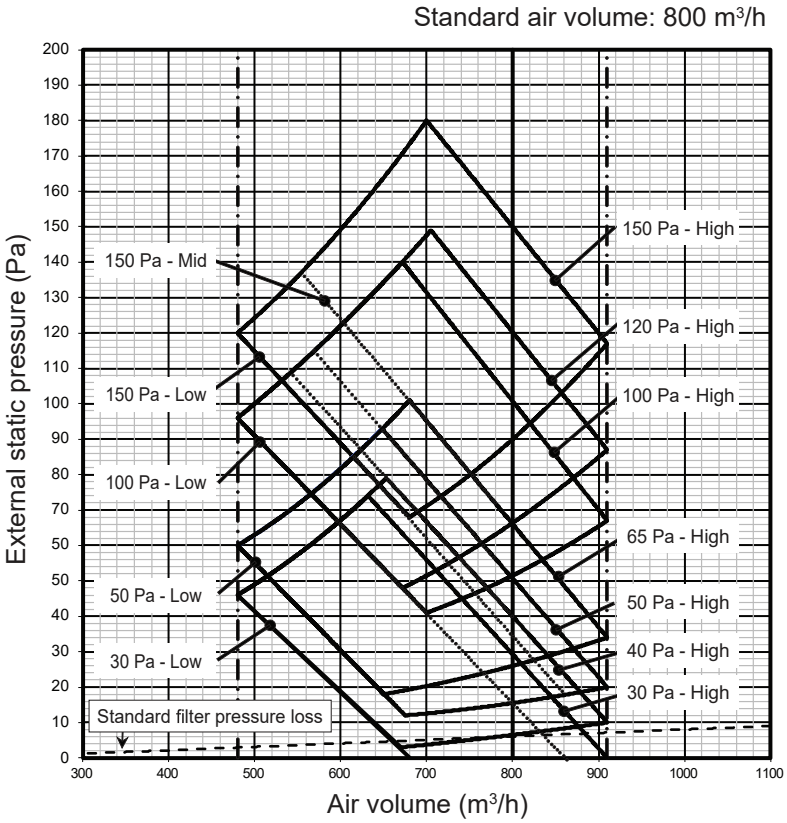

RAV-HM801BTP-E / TR

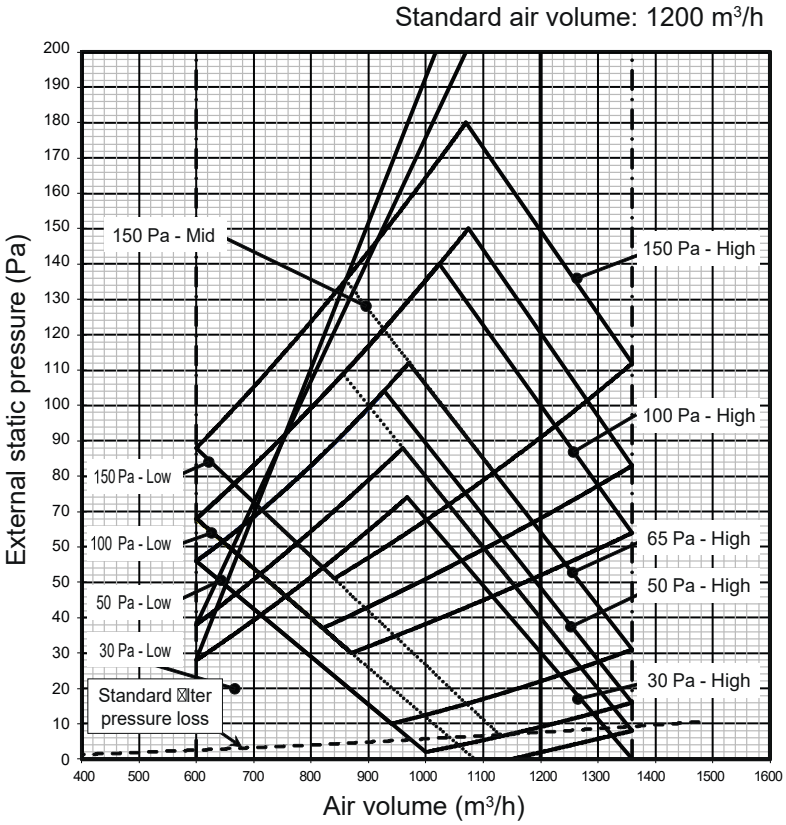

RAV-HM*__1BTP-E / TR (*110/ 140 / 160)

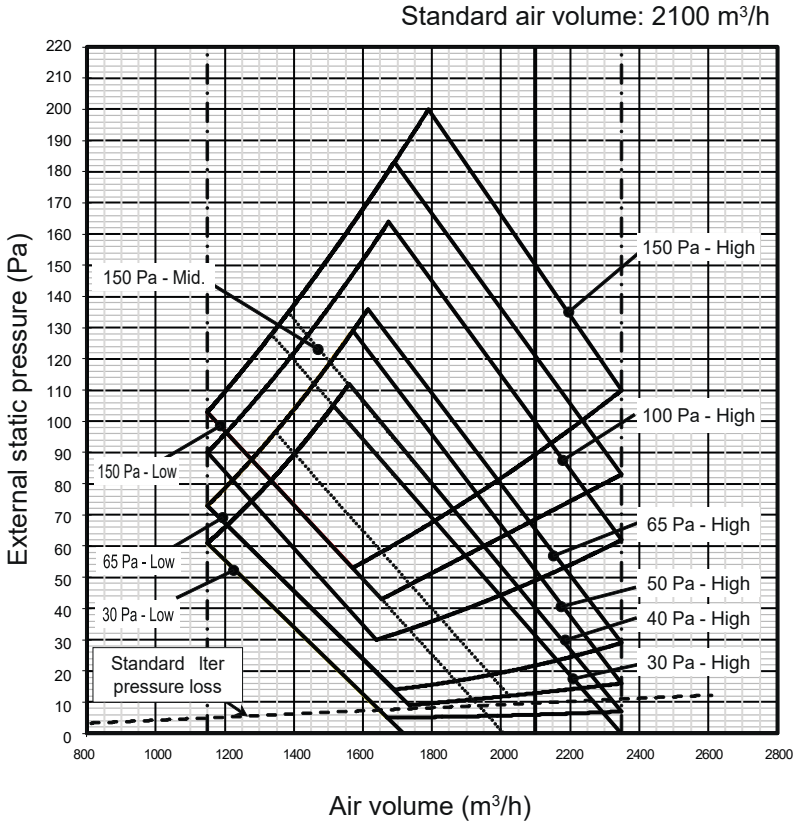

2-2-7. Sound characteristics (NC curve)

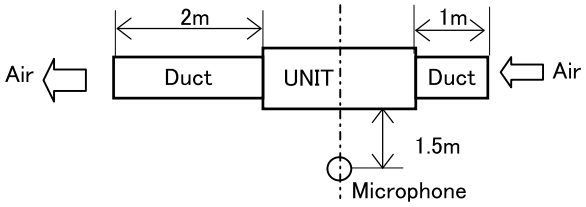

Measuring location

RAV-HM561BTP-E / TR

External static pressure 30Pa

FAN tap	H	M	L
Sound pressure level (dB(A))	33	29	25

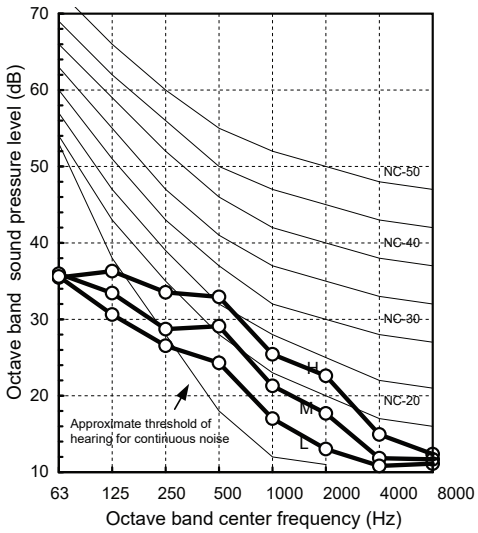

RAV-HM801BTP-E / TR

FAN tap	H	M	L
Sound pressure level (dB(A))	34	30	26

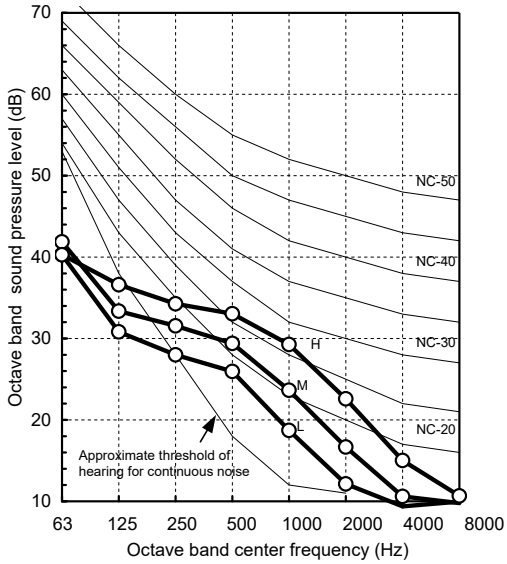

RAV-HM*__1BTP-E / TR (*110 / 140 / 160)

External static pressure 50Pa

FAN tap	H	M	L
Sound pressure level (dB(A))	40	36	33

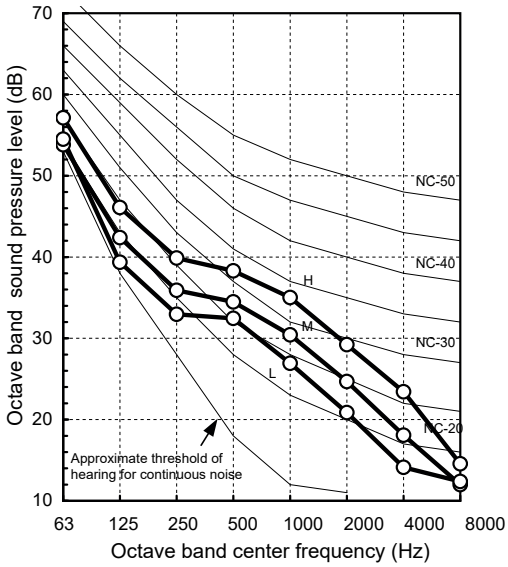

2-2-8 Optional Accessories

No	Type	Model name	Applied model / Note
1	Drain pump kit (standard equipment)	-	Built in with unit
2	Long life filter	TCB-LK801D-E	RAV-HM561BTP-E
		TCB-LK1401D-E	RAV-HM801BTP-E
		TCB-LK2801DP-E	RAV-HM__1BTP-E (*110 / 140 / 160)
3	Filter chamber	TCB-FC0481DF-E	RAV-HM__1BTP-E (*110 / 140 / 160)
	High efficiencyn filter 65 %	TCB-UFM0481D-E	RAV-HM__1BTP-E (*110 / 140 / 160)
	High efficiency filter 90 %	TCB-UFH0481D-E	RAV-HM__1BTP-E (*110 / 140 / 160)
4	Auxiliary fresh air flange	TCB-FF151US-E	RAV-HM__1BTP-E (*56 / 80 / 110 / 140 / 160)
5	Spigot flange for Duct (Zoing duct flange)	TCB-SF56C6BPE	RAV-HM561BTP-E
6	Spigot flange for Duct (Zoing duct flange)	TCB-SF80C6BPE	RAV-HM801BTP-E
7	Spigot flange for Duct (Zoing duct flange)	TCB-SF160C6BPE	RAV-HM__1BTP-E (*110 / 140 / 160)
8	Wireless Remote Kit for Concealed Duct	RBC-ACXU31P-E	RAV-HM__1BTP-E (*56 / 80 / 110 / 140 / 160)

Table of applicable accessories		RAV-HM561BTP-E	RAV-HM801BTP-E	RAV-HM1101BTP-E	RAV-HM1401BTP-E	RAV-HM1601BTP-E
Drain pump kit	TCB-DP40DPE	P	P	P	P	P
Long life filter	TCB-LK801D-E	P				
	TCB-LK1401D-E		P			
	TCB-LK2801DP-E			P	P	P
Filter chamber	TCB-FC0481DF-E			OK	OK	OK
High efficiency filter 65 %	TCB-UFM0481D-E			OK	OK	OK
High efficiency filter 90 %	TCB-UFH0481D-E			OK	OK	OK
Auxiliary fresh air flange high duct	TCB-FF151US-E	OK	OK	OK	OK	OK
Spigot flange for Duct	TCB-SF56C6BPE	OK				
Spigot flange for Duct (Zoing duct flange)	TCB-SF80C6BPE		OK			
Spigot flange for Duct (Zoing duct flange)	TCB-SF160C6BPE			OK	OK	OK
Wireless Remote Kit for Concealed Duct	RBC-ACXU31P-E	OK	OK	OK	OK	OK

Note : "P" : Built in with unit
"OK" : Compatible
Long life filer kit : incase install with chamber remove frame before put it in
High efficiency filter 65 and 90% require filter chamber to install

Appendix

1. Drain pump kit : TCB-DP40DPE

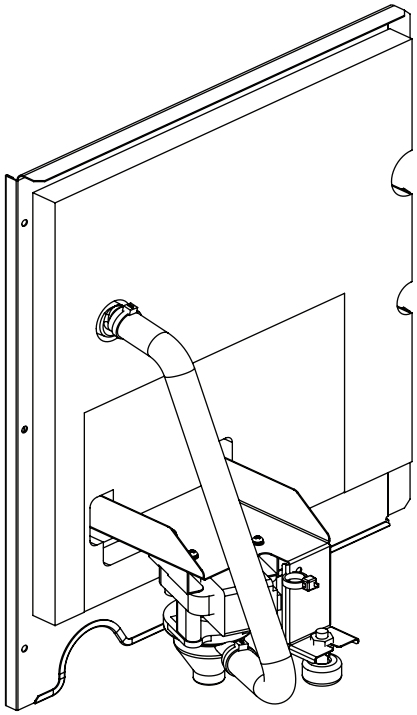

Detail of Relay assembly

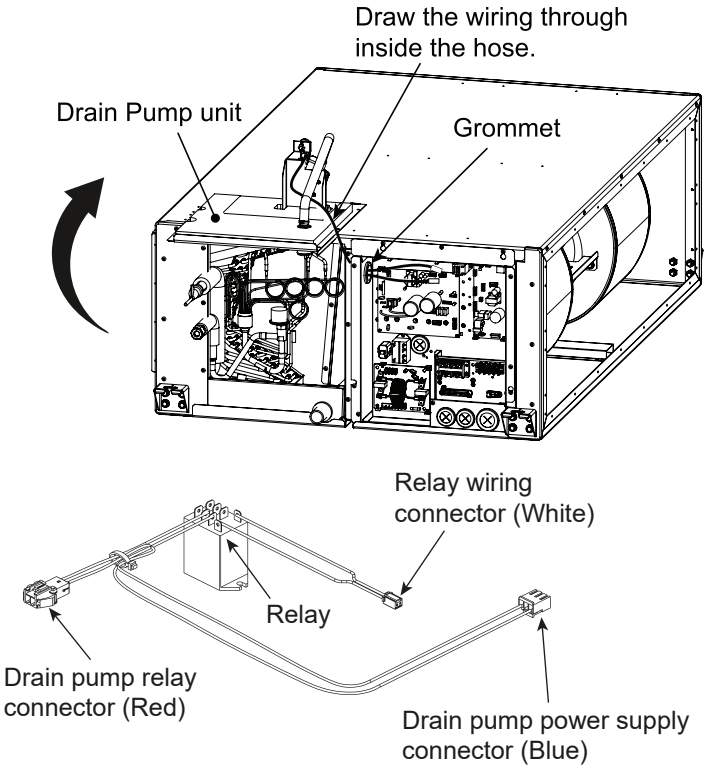

- The height of the drain pipe must be 500 mm or less from the underside of the indoor unit.
- Take the drain pipe out of the drain pipe joint with the indoor unit in 300 mm or less, and bend up the pipe vertically.
- Immediately after the pipe is bent up vertically, lay the pipe making a down.gradient.

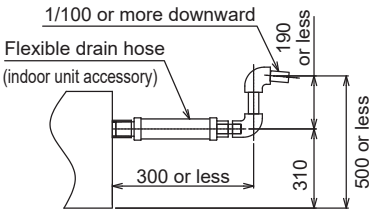

Drain - up piping

11. Appendix

2. Long life filter kit

TCB-LK801D-E , TCB-LK1401D-E

	Model: TCB-LK801D-E		Model: TCB-LK1401D-E	
Parts name	**Form**	**Quantity**	**Form**	**Quantity**
(1) Filter Frame	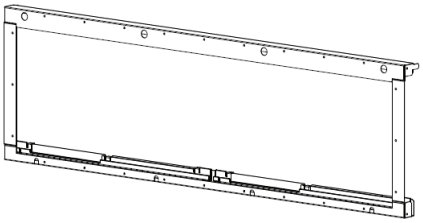	1	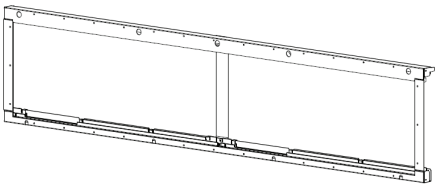	1
(2) Filter	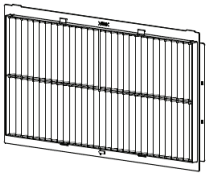	2	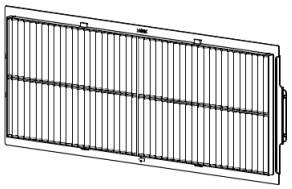	2

Dimension

Parts name	Model: TCB-LK801D-E	Model: TCB-LK1401D-E
(1) Filter Frame	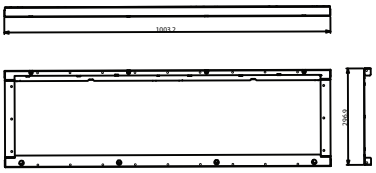	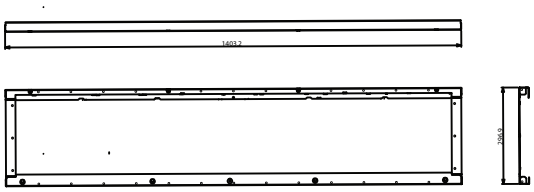
(2) Filter	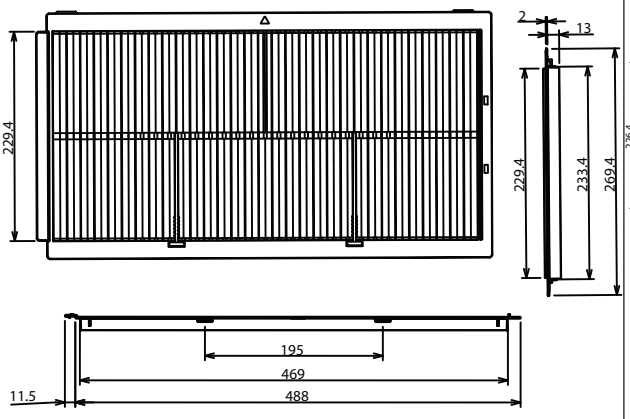	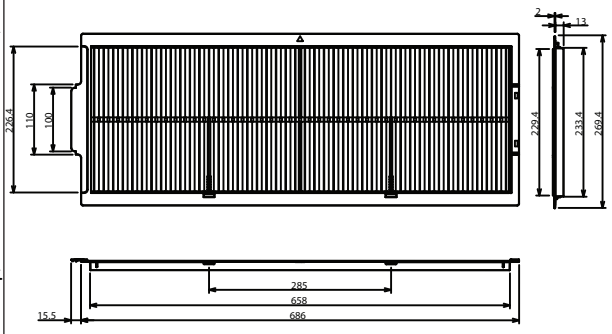

How to install

Install (1) Filter frame, (2) Filter, (3) Cover in indoor unit.

1. Before installation.

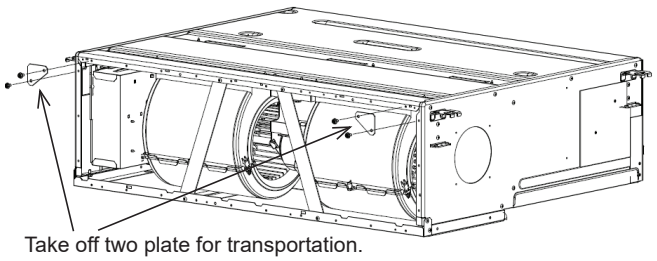

2. Install (1) Filter frame in indoor unit.

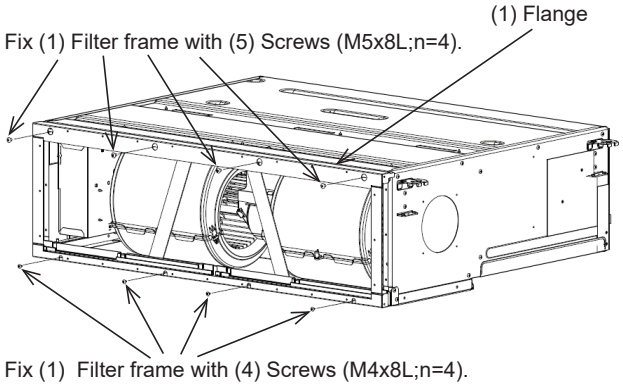

- The flange gets one having black mold parts (filter rail) in the lower direction at the time of the installation of indoor unit.

3. Install (2) Filter and (3) Cover in (1) Filter frame

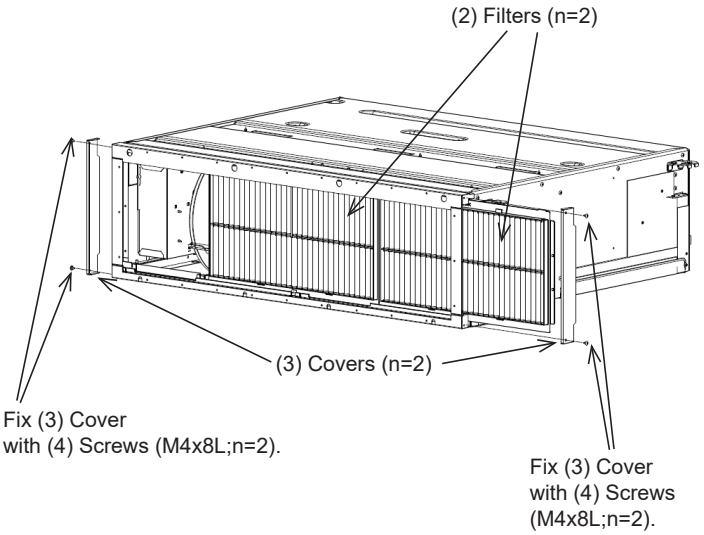

- Please confirm that two pieces of filters are connected .
- Please attach the cover with both side.

NOTE

- When you use too long screws at attach a suction duct (locally procured), you can not remove the filters by attack the screws.
- After installation completion, please confirm the putting on and taking off of the filter by all means.

External Pressure Loss Characteristic

When you use these “Long life filter Kit”, pressure-loss characteristics depends on Air Flow.

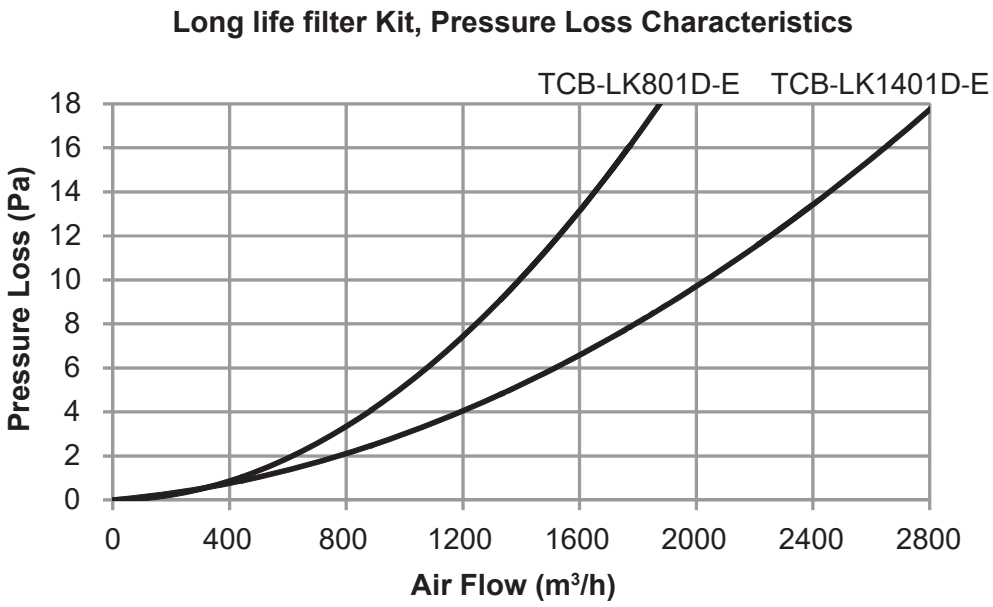

TCB-LK2801DP-E

Below part are included.

Part name	Form	Quantity
(1) Frame fix plate		2
(2) Filter frame	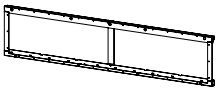	1
(3) Filter	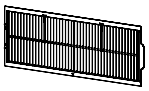	2

Duct design

Arrangement

Referring to the following dimension, manufacture duct at the local site.

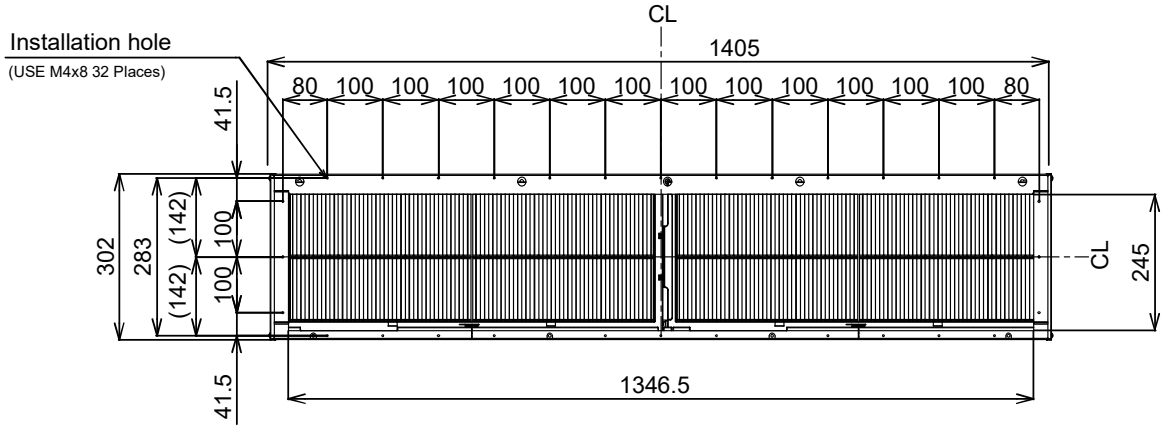

External Pressure Loss Characteristic

When you use these “Long life filter Kit”, pressure-loss characteristics depends on Air Flow.

Long life Filter Kit, Pressure Loss Characteristics

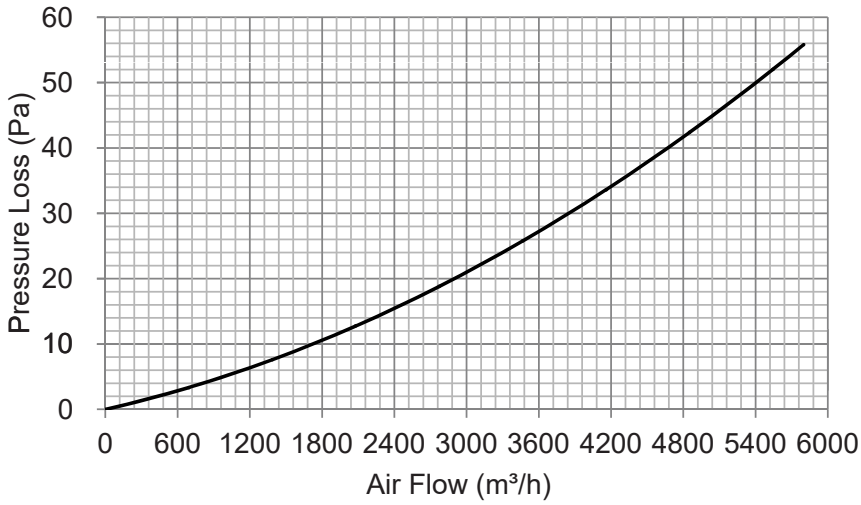

How to install

1. Peel off the tape fixing the filter rail.
And check if the claw of the filter rail is not taken off.

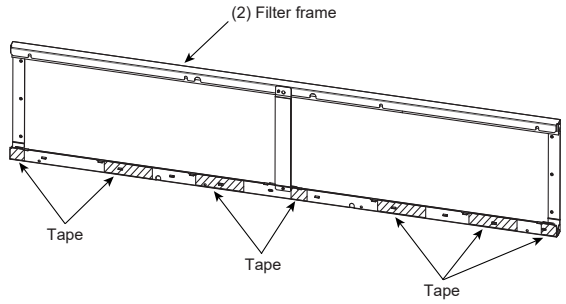

2. Install (9) (10) Seal material.
Fit the seal material to the corner and paste it.

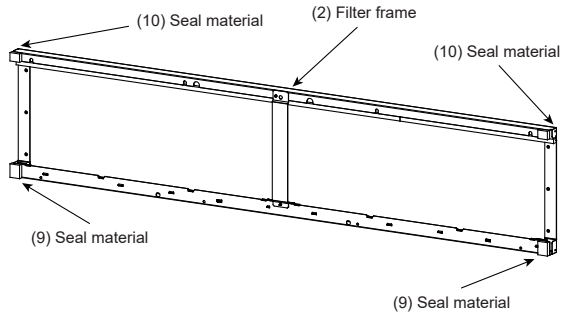

3. Install (1) Frame fix plate.

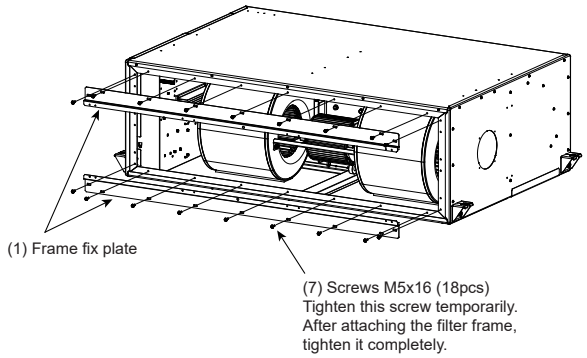

4. Install (2) Filter frame.

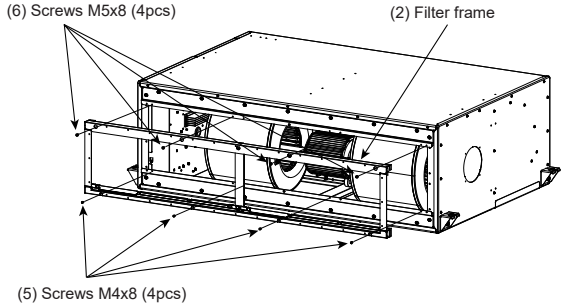

· The filter frame gets one having black mold parts (filter rail) in the lower direction at the time of the installation of indoor unit.

5. Install (8) Seal material.

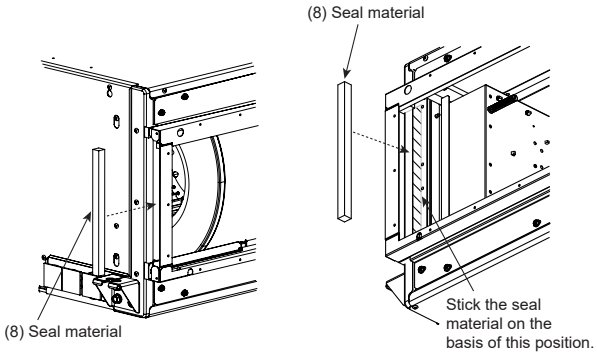

6. Install (3) Filter and (4) Cover.

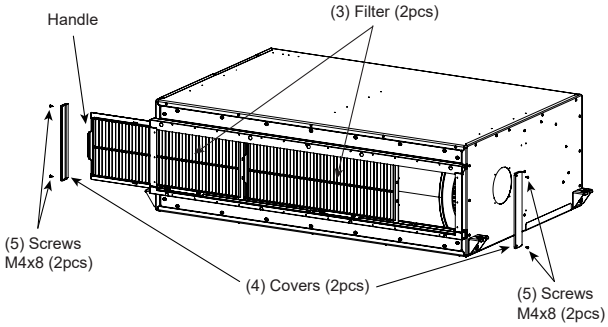

·For the filter direction, the insertion direction is the handle side as the above picture.
·Please confirm that two pieces of filters are connected.
·Please attach the cover with both side.

NOTE

When you use too long screws at attach a suction duct (local procured), you can not remove the filters by attack the screws.
Be sure to check if the filter can be attached and removed after the attachment.

3. Filter Chamber : TCB-FC___1DF-E

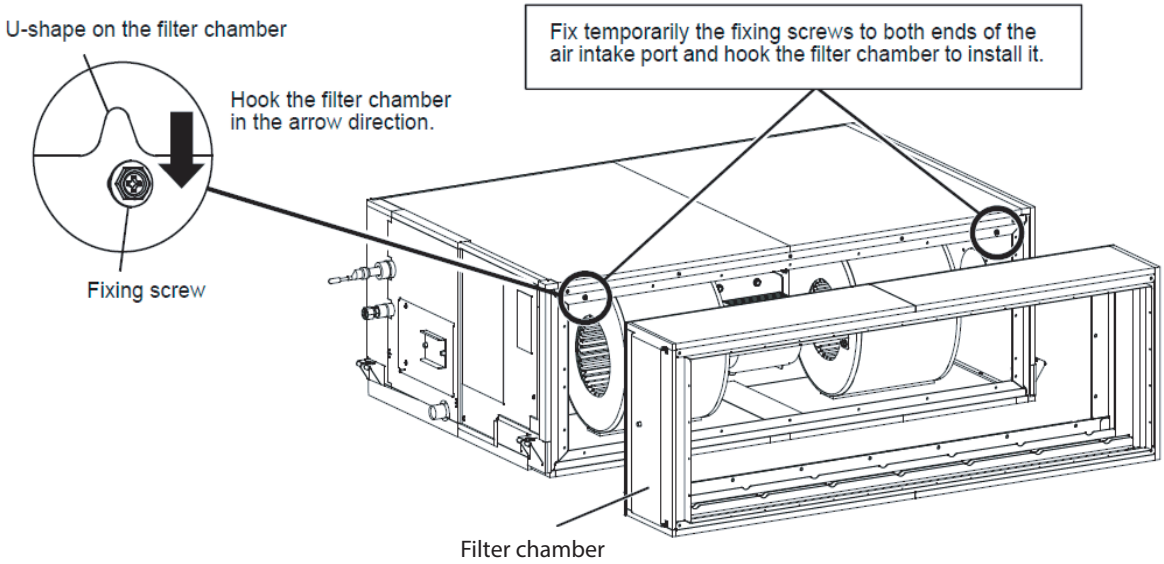

Pressure loss in standard air volume (Pa)

Applicable model		RAV-HM__1BTP-E (56,80)	RAV-HM__1BTP-E (110,140,160)
Filter chamber	(Pa)	2	2
High efficiency filter 65 %	(Pa)	13	9
High efficiency filter 90 %	(Pa)	20	12
Long life filter	(Pa)	2	2

This estimate is based on the information provided and might subject to further change prior condition

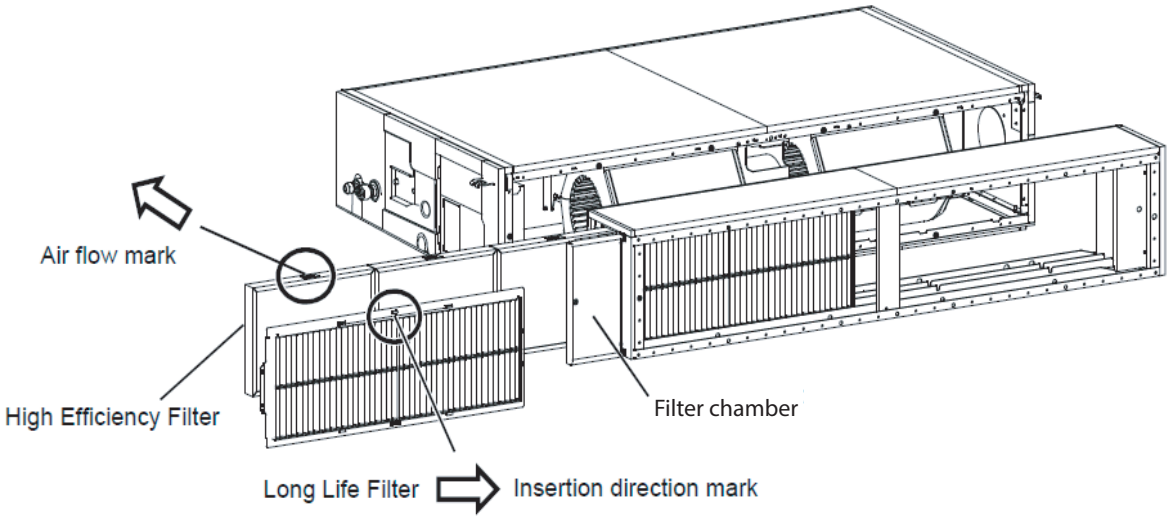

Filter type	Cleanning as a gudie *1	Replacement as a guide *1
High efficiency filter 65 %	-	2500 hr (approx. 1 year) *2
High efficiency filter 90 %	-	1800 hr (approx. 8 months) *2
Long life filter	2500 hr (1 time/year)	-

*1 : Please note that the filter cleaning time and replacement time may differ depending on the environmental conditions.

*2 : The High efficiency filter needs replaceing periodically.

4. Auxiliary fresh air flange

Arrange a flexible duct (locally procured).
It is necessary to install auxiliary fresh air flange.

INSTALLATION PROCEDURE

1 Using the knockout of the indoor unit, as a marker, cut off the steel plate with cutting pliers or cutter.
2 Install the auxiliary fresh air flange to the indoor unit with attached 4 fixing screws.

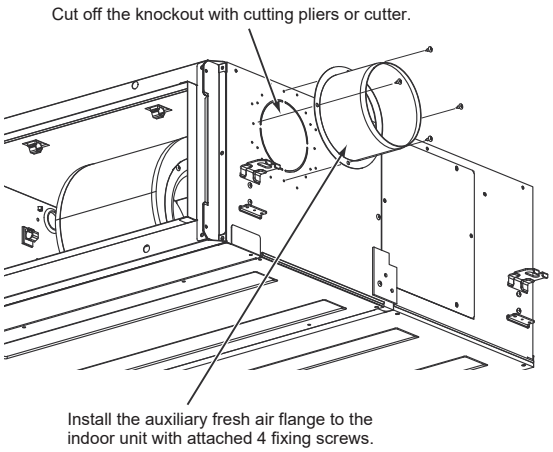

DIMENSION

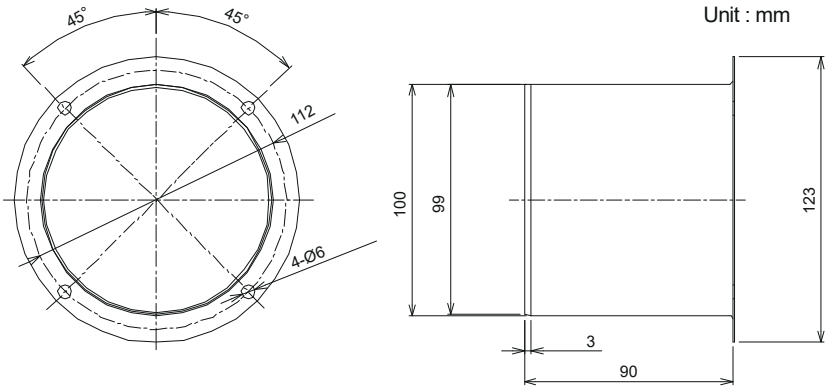

CAUTION

The fresh air shall be conditioned by heat reclaim ventilator or similar.
Emsure the fresh air volume is determined so that mixed suction air and fresh air maintain the operating temperature.
Recommended conditioned air temperature is 12ºC to 30ºC.
however, make a fresh air volume within 10% of standard.

5 , 6 Spigot shaped flange

Zoning duct flange TCB-SF80C6BPE	Zoning duct flange TCB-SF160C6BPE
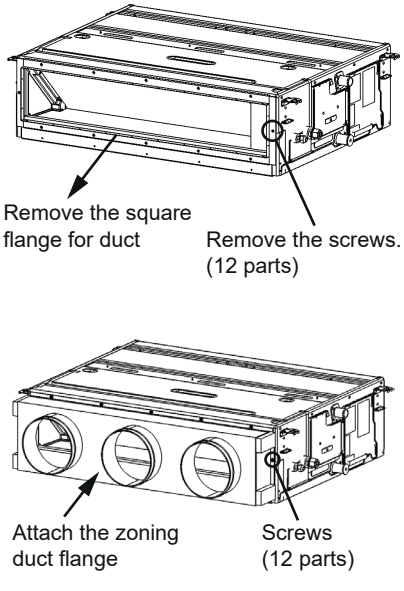	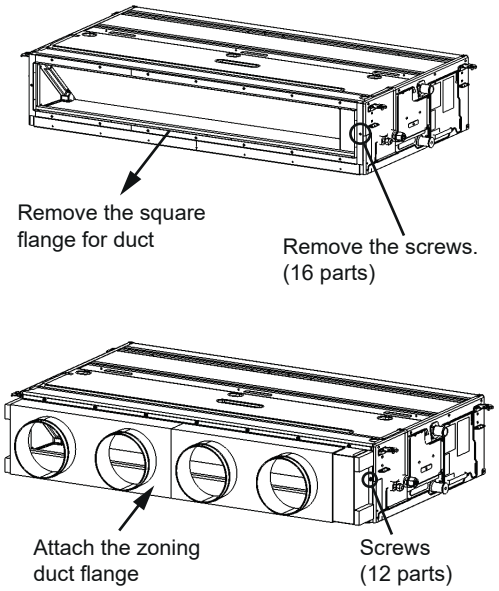

Remove screws on square flange for duct of indoor unit and attach the zoning duct flange with the screw.

External pressure loss characteristic

When you use these “Zoning duct flange” with Concealed Duct Type and High Static Presure type, pressure-loss characteristics depends on Air Flow.

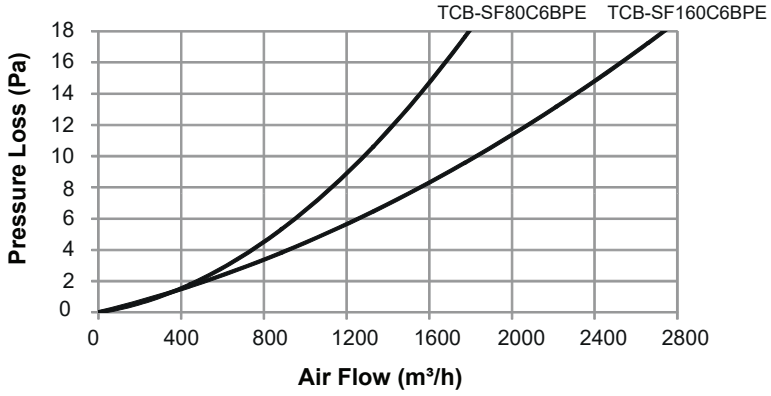

External dimension

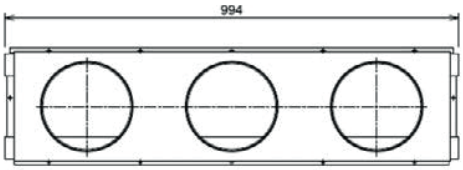

TCB-SF80C6BE

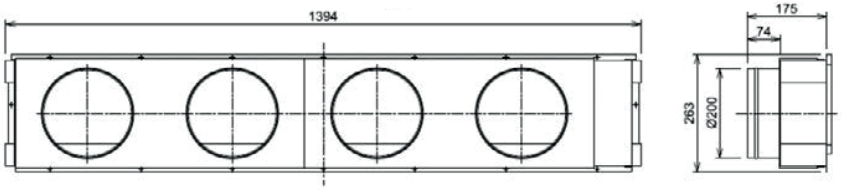

TCB-SF160C6BE

7. Wireless remote controller kit

Below part are included.

Part name	Form	Quantity
(1) Signal receiving unit (provided 200 mm control wire)		1
(2) Mounting bracket	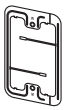	1
(3) Remote controller	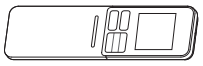	1
(4) Remote controller holder	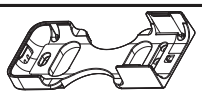	1

Connect the Signal receiving unit wiring (2-core control wire) with the wires extended from the indoor unit. Refer to the Wiring of the Signal Receiving Unit.)
Be sure to determine the correct terminal numbers on the indoor unit when wiring the Signal receiving unit.
The Signal receiving unit will be damaged if high voltage (such as 220 - 240 V) is applied.

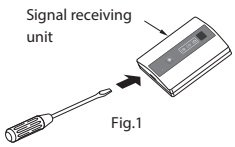

Fig.1

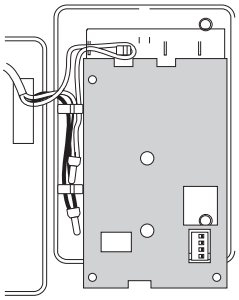

Fig.2

Wiring of the Signal Receiving Unit

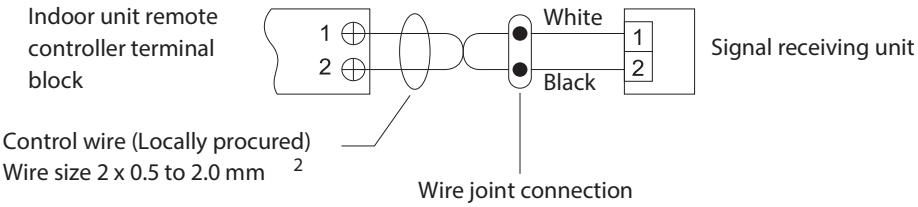

Multiple Remote Controller Installation

The control by two remote controllers is enabled by installing the wireless remote controller with the wired remote controller for an indoor unit. (Max. 2 remote controllers of wireless or wired are insatiable.) “2-remote controllers” means that one or multiple units are operated by the multiple remote controllers.

Note:

1. Upon confirmation of the terminal numbers of the indoor unit, connect the control wire without miswiring. (If applied 220 - 240 V, damage the unit.)
2. The multiple wireless remote controller kits cannot concurrently be used for an indoor unit.
3. When installing simultaneously the wireless remote controller with the wired remote controller, set one of them as the follower remote controller.
   - •To use wired remote controller or Lite-vision plus remote controller as a follower, settings must be changed. For the details, refer to the installation manual of each controller.
   - •To use the wireless remote controller as a follower, set bit 4 (Follower side) of DIP switch SW30 on the signal receiving unit P.C. board to ON.

* 2-remote controllers

The indoor unit is operated if either wireless or wired remote controller is set as header or follower remote controller. (Total wire length: Within 400 m)

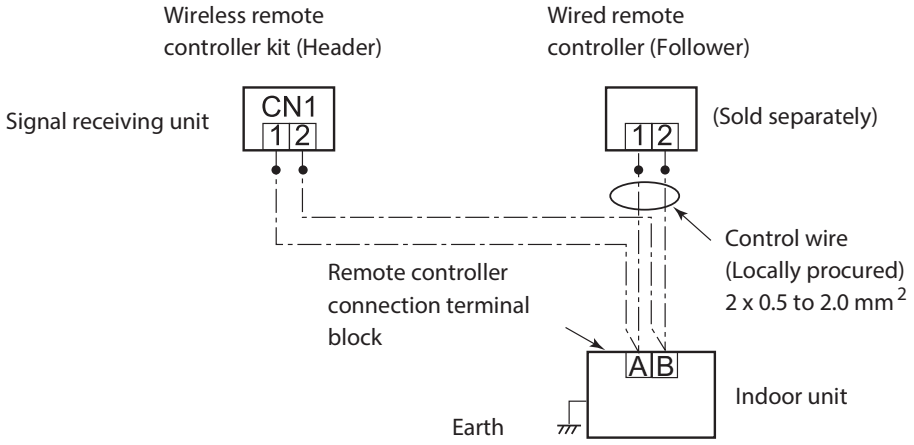

* Group control

Header and follower remote controllers are operable even if they are installed to any indoor unit. (Total wire length: Within 200 m)

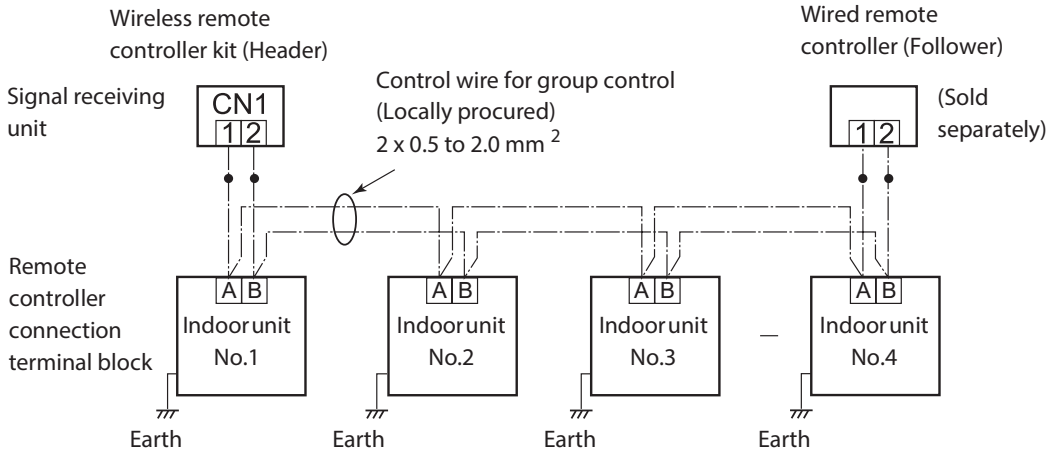

Note : Maximum 8 or 16 units are connectable (depending on connction system TCC link / TU2C ink)

2-3. High Wall Type

2-3-1. Specifications

2-3-2. Dimension

2-3-3. Wiring Diagrams

2-3-4. Sensible Capacity Table

2-3-5. Part Load Performance

2-3-6. Air Throw Distance Chart

2-3-7. Sound Characteristics (NC Curve)

2-3-1. Specifications

High wall type

Model		Indoor unit		RAV-	HM561KRTP-E / TR	HM801KRTP-E / TR	HM1101KRTP-E / TR
		Outdoor unit		RAV-	GV561ATP-E / TR	GV801ATP-E / TR	GV1101ATP-E / TR
Cooling capacity		Rated		(kW)	5.0	6.7	9.5
		Min-Max		(kW)	1.5 - 5.6	1.5 - 8.0	3.0 - 10.6
Heating capacity		Rated		(kW)	5.3	7.0	10.0
		Min-Max		(kW)	1.5 - 6.3	1.5 - 9.0	3.0 -13.0
Power supply					1 phase 220V-240V/50Hz, 220V/60Hz		
Electrical characteristics	Cooling	Running current		(A)	6.73 - 6.16	10.20 - 9.35	17.81 - 16.32
		Power consumption		(kW)	1.45	2.20	3.80
		Power factor		(%)	98	98	97
		EER			3.45	3.05	2.50
		PdesignC		(kW)	5.0	6.7	9.5
		SEER	No.		6.20	5.75	6.00
			Grade (Lot10)		A++	A+	A+
	Heating	Running current		(A)	6.96 - 6.38	10.31 - 9.45	15.46 - 14.18
		Power consumption		(kW)	1.50	2.20	3.30
		Power factor		(%)	98	97	97
		COP			3.53	3.18	3.03
		PdesignH		(kW)	2.80	4.80	7.60
		SCOP	No.		3.90	3.90	4.00
			Grade (Lot10)		A	A	A+
Indoor unit							
Appearance		Main unit			Gran White (Munsell: 5PB9/1)		
Outer dimension		Main unit	Height	(mm)	320		348
			Width	(mm)	1050		1,200
			Depth	(mm)	250		280
Total weight		Main unit		(kg)	14		19
Fan unit		Fan			Cross flow fan		
		Standard air flow	H/M/L	(m3/h)	960/830/680	1040/910/680	1610/1350 /1180
Air filter					Standard filter (Long life filter)		
Sound pressure level			H/M/L	(dB)	42/39/35	45/41/35	49/45/41
Sound power level			H/M/L	(dB)	57/54/50	60/56/50	64/60/56

1 : The cooling capacities and electrical characteristics are measured under the conditions specified by JIS B 8615 based on the reference piping. The reference piping consists of 5 m of main piping and 2.5 m of branch piping connected with 0 meter height.

2 : The sound level are measured in an anechoic chamber in accordance with JIS B 8616. Normally, the values measured in the actual operating environment become larger than the indicated values due to the effects of external sound.

Note :

Rated conditions Cooling : Indoor air temperature 27°C DB/19°C WB, Outdoor air temperature 35°C DB

2-3-2. Dimension

RAV-HM*__1KRTP-E / TR (*56 / 80)

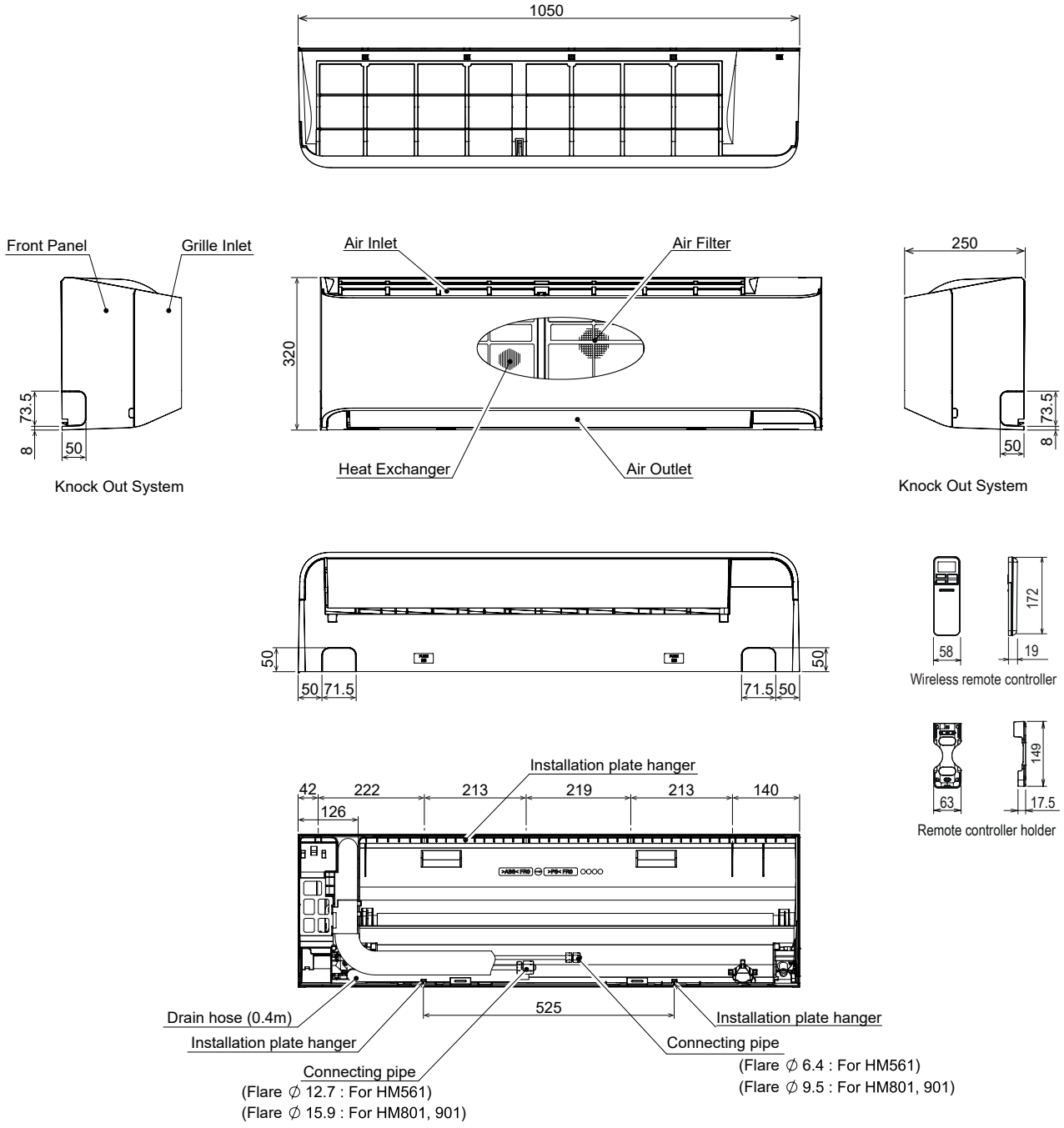

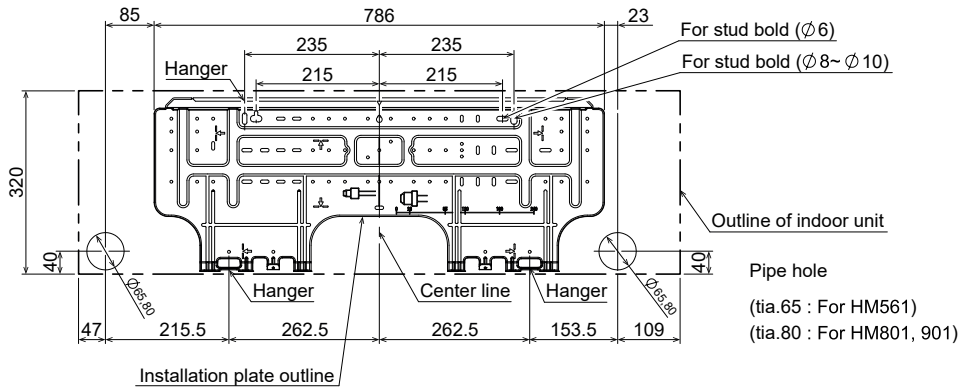

RAV-HM1101KRTP-E / TR

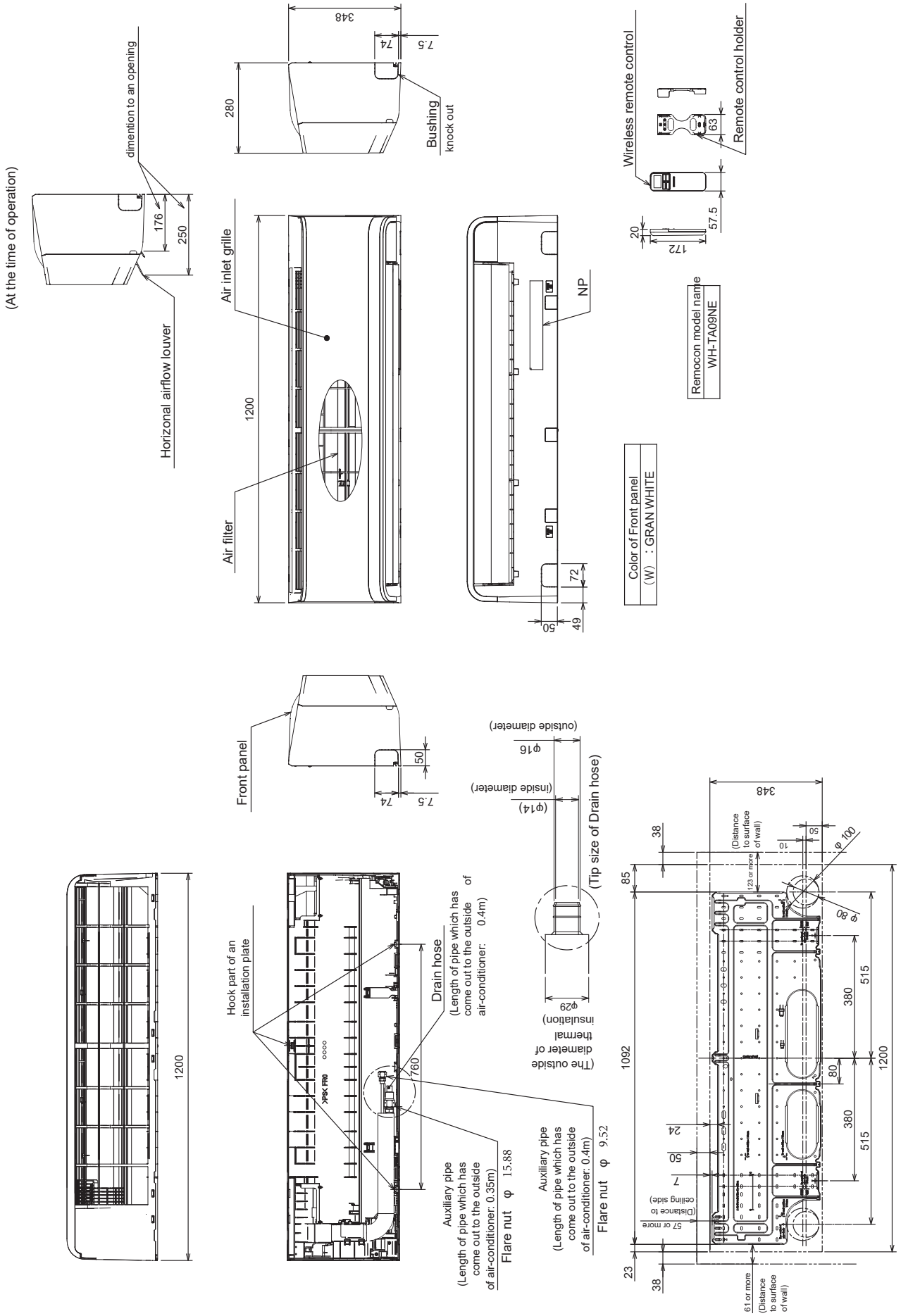

2-3-3. Wiring diagrams

RAV-HM*__1KRTP-E / TR (*56 / 80)

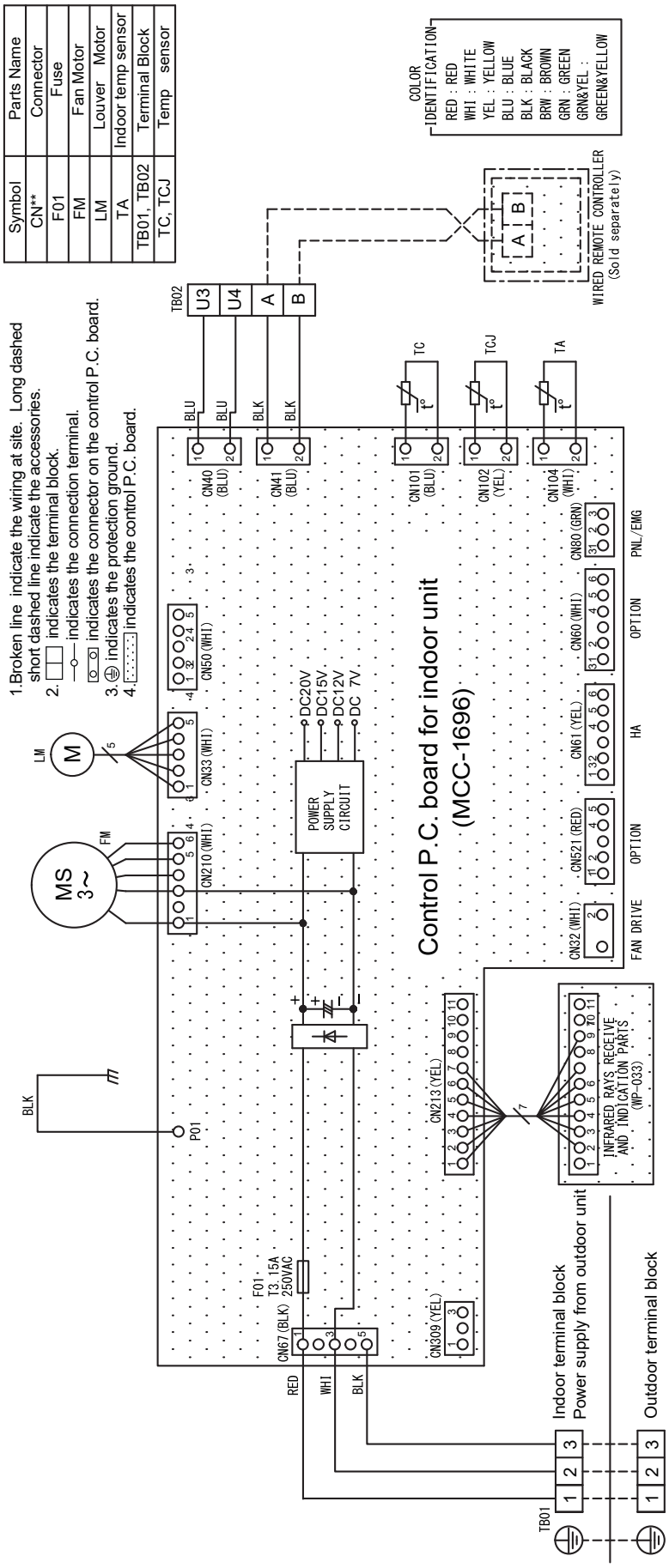

RAV-HM1101KRTP-E / TR

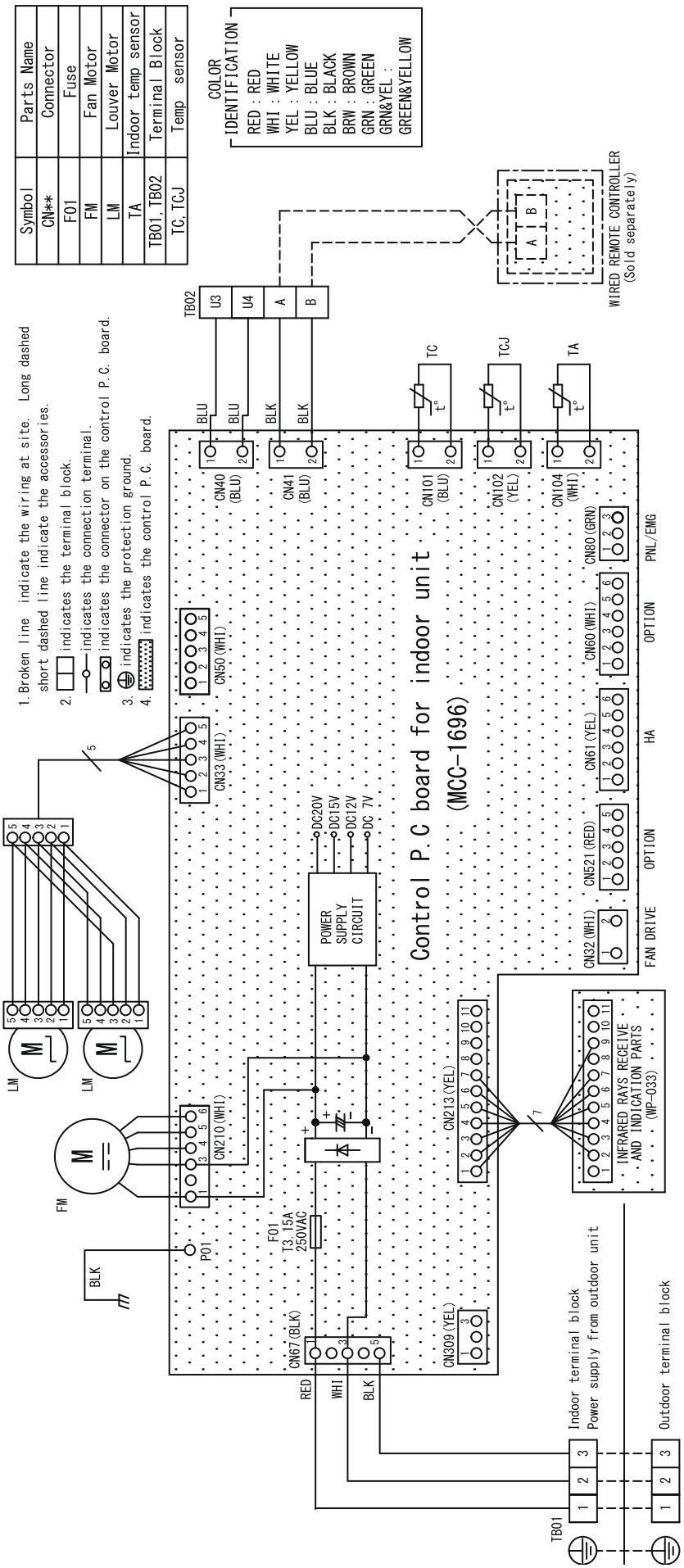

2-3-4. Sensible Capacity Table

Product models : RAV-HM561KRTP-E / TR ; RAV-GV561ATP-E / TR

Specification of product at standard condition

Standard Condition		
	Indoor	27°C (DB) / 19°C (WB)
	Outdoor	35°C (DB) / 24°C (WB)

Total Cooling Capacity (TC)	5.00	kW
Sensible Heat Capacity (SHC)	4.15	kW

Outdoor air temperature	Indoor air temperature													
	20.0°C (DB) 14.0°C (WB)		23.0°C (DB) 16.0°C (WB)		26.0°C (DB) 18.0°C (WB)		27.0°C (DB) 19.0°C (WB)		28.0°C (DB) 20.0°C (WB)		30.0°C (DB) 22.0°C (WB)		32.0°C (DB) 24.0°C (WB)	
DB (°C)	TC	SHC	TC	SHC	TC	SHC	TC	SHC	TC	SHC	TC	SHC	TC	SHC
10	5.4	4.8	6.0	5.2	6.4	5.5	6.6	5.5	6.8	5.5	7.2	5.4	7.5	5.4
11	5.4	4.8	5.9	5.1	6.4	5.4	6.5	5.4	6.7	5.4	7.1	5.4	7.5	5.3
12	5.3	4.7	5.9	5.1	6.3	5.4	6.5	5.4	6.7	5.4	7.1	5.3	7.4	5.3
13	5.3	4.7	5.8	5.0	6.2	5.3	6.4	5.3	6.6	5.3	7.0	5.3	7.3	5.2
14	5.2	4.6	5.8	5.0	6.2	5.3	6.4	5.3	6.5	5.3	6.9	5.2	7.2	5.2
15	5.2	4.6	5.7	4.9	6.1	5.2	6.3	5.2	6.5	5.2	6.8	5.2	7.2	5.1
16	5.1	4.6	5.6	4.9	6.0	5.2	6.2	5.2	6.4	5.2	6.8	5.1	7.1	5.0
17	5.1	4.5	5.6	4.8	6.0	5.1	6.2	5.1	6.3	5.1	6.7	5.1	7.0	5.0
18	5.0	4.5	5.5	4.8	5.9	5.1	6.1	5.1	6.3	5.1	6.6	5.0	6.9	4.9
19	5.0	4.4	5.5	4.7	5.9	5.0	6.0	5.0	6.2	5.0	6.6	5.0	6.9	4.9
20	4.9	4.4	5.4	4.7	5.8	5.0	6.0	4.9	6.1	4.9	6.5	4.9	6.8	4.8
21	4.8	4.3	5.4	4.6	5.7	4.9	5.9	4.9	6.1	4.9	6.4	4.9	6.7	4.8
22	4.8	4.3	5.3	4.6	5.7	4.8	5.8	4.8	6.0	4.8	6.4	4.8	6.6	4.7
23	4.7	4.2	5.2	4.5	5.6	4.8	5.8	4.8	5.9	4.8	6.3	4.8	6.6	4.7
24	4.7	4.2	5.2	4.5	5.5	4.7	5.7	4.7	5.9	4.7	6.2	4.7	6.5	4.6
25	4.6	4.1	5.1	4.4	5.5	4.7	5.6	4.7	5.8	4.7	6.1	4.7	6.4	4.6
26	4.6	4.1	5.1	4.4	5.4	4.6	5.6	4.6	5.7	4.6	6.1	4.6	6.4	4.5
27	4.5	4.0	5.0	4.3	5.4	4.6	5.5	4.6	5.7	4.6	6.0	4.5	6.3	4.5
28	4.5	4.0	4.9	4.3	5.3	4.5	5.5	4.5	5.6	4.5	5.9	4.5	6.2	4.4
29	4.4	3.9	4.9	4.2	5.2	4.5	5.4	4.5	5.5	4.5	5.9	4.4	6.1	4.4
30	4.4	3.9	4.8	4.2	5.2	4.4	5.3	4.4	5.5	4.4	5.8	4.4	6.1	4.3
31	4.3	3.8	4.8	4.1	5.1	4.4	5.3	4.4	5.4	4.4	5.7	4.3	6.0	4.3
32	4.3	3.8	4.7	4.1	5.0	4.3	5.2	4.3	5.3	4.3	5.7	4.3	5.9	4.2
33	4.2	3.8	4.7	4.0	5.0	4.3	5.1	4.3	5.3	4.3	5.6	4.2	5.8	4.2
34	4.2	3.7	4.6	4.0	4.9	4.2	5.1	4.2	5.2	4.2	5.5	4.2	5.8	4.1
35	4.1	3.7	4.5	3.9	4.9	4.2	5.0	4.2	5.1	4.2	5.4	4.1	5.7	4.1
36	4.1	3.6	4.5	3.9	4.8	4.1	4.9	4.1	5.1	4.1	5.4	4.1	5.6	4.0
37	4.0	3.6	4.4	3.8	4.7	4.0	4.9	4.0	5.0	4.0	5.3	4.0	5.5	3.9
38	4.0	3.5	4.4	3.8	4.7	4.0	4.8	4.0	4.9	4.0	5.2	4.0	5.5	3.9
39	3.9	3.5	4.3	3.7	4.6	3.9	4.7	3.9	4.9	3.9	5.2	3.9	5.4	3.8
40	3.8	3.4	4.2	3.7	4.5	3.9	4.7	3.9	4.8	3.9	5.1	3.9	5.3	3.8
41	3.8	3.4	4.2	3.6	4.5	3.8	4.6	3.8	4.8	3.8	5.0	3.8	5.3	3.7
42	3.7	3.3	4.1	3.6	4.4	3.8	4.6	3.8	4.7	3.8	5.0	3.8	5.2	3.7
43	3.7	3.3	4.1	3.5	4.4	3.7	4.5	3.7	4.6	3.7	4.9	3.7	5.1	3.6
44	3.6	3.2	4.0	3.5	4.3	3.7	4.4	3.7	4.5	3.7	4.8	3.6	5.0	3.6
45	3.6	3.2	4.0	3.4	4.2	3.6	4.4	3.6	4.5	3.6	4.7	3.6	5.0	3.5
46	3.5	3.1	3.9	3.4	4.2	3.6	4.3	3.6	4.4	3.6	4.7	3.5	4.9	3.5

Product models : RAV-HM801KRTP-E / TR ; RAV-GV801ATP-E / TR

Specification of product at standard condition

Standard Condition		
	Indoor	27°C (DB) / 19°C (WB)
	Outdoor	35°C (DB) / 24°C (WB)

Total Cooling Capacity (TC)	6.70	kW
Sensible Heat Capacity (SHC)	5.56	kW

Outdoor air temperature	Indoor air temperature													
	20.0°C (DB) 14.0°C (WB)		23.0°C (DB) 16.0°C (WB)		26.0°C (DB) 18.0°C (WB)		27.0°C (DB) 19.0°C (WB)		28.0°C (DB) 20.0°C (WB)		30.0°C (DB) 22.0°C (WB)		32.0°C (DB) 24.0°C (WB)	
DB (°C)	TC	SHC	TC	SHC	TC	SHC	TC	SHC	TC	SHC	TC	SHC	TC	SHC
10	7.3	6.5	8.0	6.9	8.6	7.4	8.9	7.3	9.1	7.3	9.6	7.3	10.1	7.2
11	7.2	6.4	7.9	6.8	8.5	7.3	8.8	7.3	9.0	7.3	9.5	7.2	10.0	7.1
12	7.1	6.4	7.9	6.8	8.4	7.2	8.7	7.2	8.9	7.2	9.5	7.2	9.9	7.0
13	7.1	6.3	7.8	6.7	8.3	7.1	8.6	7.1	8.8	7.1	9.4	7.1	9.8	7.0
14	7.0	6.2	7.7	6.6	8.3	7.1	8.5	7.1	8.8	7.1	9.3	7.0	9.7	6.9
15	6.9	6.2	7.6	6.6	8.2	7.0	8.4	7.0	8.7	7.0	9.2	6.9	9.6	6.8
16	6.8	6.1	7.6	6.5	8.1	6.9	8.3	6.9	8.6	6.9	9.1	6.9	9.5	6.8
17	6.8	6.0	7.5	6.4	8.0	6.9	8.3	6.8	8.5	6.9	9.0	6.8	9.4	6.7
18	6.7	6.0	7.4	6.4	7.9	6.8	8.2	6.8	8.4	6.8	8.9	6.7	9.3	6.6
19	6.6	5.9	7.3	6.3	7.8	6.7	8.1	6.7	8.3	6.7	8.8	6.7	9.2	6.6
20	6.6	5.8	7.2	6.2	7.8	6.6	8.0	6.6	8.2	6.6	8.7	6.6	9.1	6.5
21	6.5	5.8	7.2	6.2	7.7	6.6	7.9	6.6	8.1	6.6	8.6	6.5	9.0	6.4
22	6.4	5.7	7.1	6.1	7.6	6.5	7.8	6.5	8.0	6.5	8.5	6.5	8.9	6.3
23	6.3	5.7	7.0	6.0	7.5	6.4	7.7	6.4	8.0	6.4	8.4	6.4	8.8	6.3
24	6.3	5.6	6.9	6.0	7.4	6.4	7.7	6.3	7.9	6.4	8.3	6.3	8.7	6.2
25	6.2	5.5	6.9	5.9	7.3	6.3	7.6	6.3	7.8	6.3	8.2	6.2	8.6	6.1
26	6.1	5.5	6.8	5.8	7.3	6.2	7.5	6.2	7.7	6.2	8.1	6.2	8.5	6.1
27	6.1	5.4	6.7	5.8	7.2	6.1	7.4	6.1	7.6	6.1	8.0	6.1	8.4	6.0
28	6.0	5.3	6.6	5.7	7.1	6.1	7.3	6.1	7.5	6.1	8.0	6.0	8.3	5.9
29	5.9	5.3	6.5	5.6	7.0	6.0	7.2	6.0	7.4	6.0	7.9	6.0	8.2	5.9
30	5.9	5.2	6.5	5.6	6.9	5.9	7.1	5.9	7.3	5.9	7.8	5.9	8.1	5.8
31	5.8	5.2	6.4	5.5	6.8	5.8	7.0	5.8	7.2	5.8	7.7	5.8	8.0	5.7
32	5.7	5.1	6.3	5.4	6.8	5.8	7.0	5.8	7.2	5.8	7.6	5.7	7.9	5.6
33	5.6	5.0	6.2	5.4	6.7	5.7	6.9	5.7	7.1	5.7	7.5	5.7	7.8	5.6
34	5.6	5.0	6.2	5.3	6.6	5.6	6.8	5.6	7.0	5.6	7.4	5.6	7.7	5.5
35	5.5	4.9	6.1	5.2	6.5	5.6	6.7	5.6	6.9	5.6	7.3	5.5	7.6	5.4
36	5.4	4.8	6.0	5.2	6.4	5.5	6.6	5.5	6.8	5.5	7.2	5.5	7.5	5.4
37	5.4	4.8	5.9	5.1	6.3	5.4	6.5	5.4	6.7	5.4	7.1	5.4	7.4	5.3
38	5.3	4.7	5.8	5.0	6.3	5.3	6.4	5.3	6.6	5.3	7.0	5.3	7.3	5.2
39	5.2	4.7	5.8	5.0	6.2	5.3	6.4	5.3	6.5	5.3	6.9	5.2	7.2	5.2
40	5.2	4.6	5.7	4.9	6.1	5.2	6.3	5.2	6.4	5.2	6.8	5.2	7.1	5.1
41	5.1	4.5	5.6	4.8	6.0	5.1	6.2	5.1	6.4	5.1	6.7	5.1	7.0	5.0
42	5.0	4.5	5.5	4.8	5.9	5.1	6.1	5.1	6.3	5.1	6.6	5.0	6.9	4.9
43	4.9	4.4	5.5	4.7	5.8	5.0	6.0	5.0	6.2	5.0	6.5	5.0	6.8	4.9
44	4.9	4.3	5.4	4.6	5.8	4.9	5.9	4.9	6.1	4.9	6.5	4.9	6.8	4.8
45	4.8	4.3	5.3	4.6	5.7	4.9	5.8	4.8	6.0	4.8	6.4	4.8	6.7	4.7
46	4.7	4.2	5.2	4.5	5.6	4.8	5.8	4.8	5.9	4.8	6.3	4.7	6.6	4.7

Product models : RAV-HM1101KRTP-E / TR ; RAV-GV1101ATP-E / TR

Specification of product at standard condition

Standard Condition		
	Indoor	27°C (DB) / 19°C (WB)
	Outdoor	35°C (DB) / 24°C (WB)

Total Cooling Capacity (TC)	9.50	kW
Sensible Heat Capacity (SHC)	7.89	kW

Outdoor air temperature	Indoor air temperature													
	20.0°C (DB) 14.0°C (WB)		23.0°C (DB) 16.0°C (WB)		26.0°C (DB) 18.0°C (WB)		27.0°C (DB) 19.0°C (WB)		28.0°C (DB) 20.0°C (WB)		30.0°C (DB) 22.0°C (WB)		32.0°C (DB) 24.0°C (WB)	
DB (°C)	TC	SHC	TC	SHC	TC	SHC	TC	SHC	TC	SHC	TC	SHC	TC	SHC
10	10.3	9.2	11.4	9.8	12.2	10.4	12.6	10.4	12.9	10.4	13.7	10.4	14.3	10.2
11	10.2	9.1	11.3	9.7	12.1	10.3	12.4	10.3	12.8	10.3	13.5	10.3	14.2	10.1
12	10.1	9.0	11.2	9.6	11.9	10.2	12.3	10.2	12.7	10.2	13.4	10.1	14.0	10.0
13	10.0	8.9	11.0	9.5	11.8	10.1	12.2	10.1	12.5	10.1	13.3	10.0	13.9	9.9
14	9.9	8.8	10.9	9.4	11.7	10.0	12.1	10.0	12.4	10.0	13.1	9.9	13.7	9.8
15	9.8	8.7	10.8	9.3	11.6	9.9	11.9	9.9	12.3	9.9	13.0	9.8	13.6	9.7
16	9.7	8.6	10.7	9.2	11.5	9.8	11.8	9.8	12.2	9.8	12.9	9.7	13.5	9.6
17	9.6	8.6	10.6	9.1	11.4	9.7	11.7	9.7	12.0	9.7	12.7	9.6	13.3	9.5
18	9.5	8.5	10.5	9.0	11.2	9.6	11.6	9.6	11.9	9.6	12.6	9.5	13.2	9.4
19	9.4	8.4	10.4	8.9	11.1	9.5	11.5	9.5	11.8	9.5	12.5	9.4	13.0	9.3
20	9.3	8.3	10.3	8.8	11.0	9.4	11.3	9.4	11.7	9.4	12.3	9.3	12.9	9.2
21	9.2	8.2	10.2	8.8	10.9	9.3	11.2	9.3	11.5	9.3	12.2	9.2	12.8	9.1
22	9.1	8.1	10.1	8.7	10.8	9.2	11.1	9.2	11.4	9.2	12.1	9.1	12.6	9.0
23	9.0	8.0	9.9	8.6	10.6	9.1	11.0	9.1	11.3	9.1	11.9	9.0	12.5	8.9
24	8.9	7.9	9.8	8.5	10.5	9.0	10.8	9.0	11.2	9.0	11.8	8.9	12.4	8.8
25	8.8	7.8	9.7	8.4	10.4	8.9	10.7	8.9	11.0	8.9	11.7	8.8	12.2	8.7
26	8.7	7.8	9.6	8.3	10.3	8.8	10.6	8.8	10.9	8.8	11.5	8.7	12.1	8.6
27	8.6	7.7	9.5	8.2	10.2	8.7	10.5	8.7	10.8	8.7	11.4	8.6	11.9	8.5
28	8.5	7.6	9.4	8.1	10.1	8.6	10.4	8.6	10.6	8.6	11.3	8.5	11.8	8.4
29	8.4	7.5	9.3	8.0	9.9	8.5	10.2	8.5	10.5	8.5	11.1	8.4	11.7	8.3
30	8.3	7.4	9.2	7.9	9.8	8.4	10.1	8.4	10.4	8.4	11.0	8.3	11.5	8.2
31	8.2	7.3	9.1	7.8	9.7	8.3	10.0	8.3	10.3	8.3	10.9	8.2	11.4	8.1
32	8.1	7.2	9.0	7.7	9.6	8.2	9.9	8.2	10.2	8.2	10.8	8.1	11.2	8.0
33	8.0	7.1	8.8	7.6	9.5	8.1	9.7	8.1	10.0	8.1	10.6	8.0	11.1	7.9
34	7.9	7.0	8.7	7.5	9.3	8.0	9.6	8.0	9.9	8.0	10.5	7.9	11.0	7.8
35	7.8	7.0	8.6	7.4	9.2	7.9	9.5	7.9	9.8	7.9	10.3	7.8	10.8	7.7
36	7.7	6.9	8.5	7.3	9.1	7.8	9.4	7.8	9.6	7.8	10.2	7.7	10.7	7.6
37	7.6	6.8	8.4	7.2	9.0	7.7	9.3	7.7	9.5	7.7	10.1	7.6	10.5	7.5
38	7.5	6.7	8.3	7.1	8.9	7.6	9.1	7.6	9.4	7.6	9.9	7.5	10.4	7.4
39	7.4	6.6	8.2	7.0	8.8	7.5	9.0	7.5	9.3	7.5	9.8	7.4	10.3	7.3
40	7.3	6.5	8.1	6.9	8.6	7.4	8.9	7.4	9.1	7.4	9.7	7.3	10.1	7.2
41	7.2	6.4	8.0	6.8	8.5	7.3	8.8	7.3	9.0	7.3	9.6	7.2	10.0	7.1
42	7.1	6.3	7.8	6.8	8.4	7.2	8.7	7.2	8.9	7.2	9.4	7.1	9.9	7.0
43	7.0	6.2	7.7	6.7	8.3	7.1	8.5	7.1	8.8	7.1	9.3	7.0	9.7	6.9
44	6.9	6.1	7.6	6.6	8.2	7.0	8.4	7.0	8.6	7.0	9.2	6.9	9.6	6.8
45	6.8	6.1	7.5	6.5	8.0	6.9	8.3	6.9	8.5	6.9	9.0	6.8	9.4	6.7
46	6.7	6.0	7.4	6.4	7.9	6.8	8.2	6.8	8.4	6.8	8.9	6.7	9.3	6.6

2-3-5. Part load performance

Combination

Indoor units : RAV-HM561KRTP-E / TR

Outdoor unit : RAV-GV561ATP-E / TR

	Cooling		Heating	
	Capacity [Q (W)]	Power consumption [W (W)]	Capacity [Q (W)]	Power consumption [W (W)]
MINIMUM	1500	300	1500	300
RATING	5000	1450	5300	1500

Cooling

Outdoor temperature (℃)		Load(%)									
		100	90	80	70	60	50	40	30	20	10
46	Q	4290	3620	3210	2820	2410	2010	1610	1200	1200	1200
	W	1680	1600	1390	1190	980	790	570	370	370	370
43	Q	4490	4040	3590	3140	2690	2240	1790	1350	1350	1350
	W	1620	1440	1250	1070	880	700	510	330	330	330
40	Q	4680	4210	3740	3280	2810	2340	1870	1400	1400	1400
	W	1550	1380	1200	1030	850	680	490	320	320	320
35	Q	5000	4500	4000	3500	3000	2500	2000	1500	1500	1500
	W	1450	1290	1120	960	790	630	460	300	300	300
30	Q	5320	4790	4260	3720	3190	2660	2130	1600	1600	1600
	W	1350	1200	1040	890	730	580	430	280	280	280
25	Q	5640	5080	4510	3950	3390	2820	2260	1690	1690	1690
	W	1240	1110	960	820	680	540	390	260	260	260
20	Q	5960	5370	4770	4170	3580	2980	2390	1790	1790	1790
	W	1140	1010	880	750	620	490	360	240	240	240

Heating

Outdoor temperature (℃)		Load(%)									
		100	90	80	70	60	50	40	30	20	10
20	Q	6660	6000	5330	4660	4000	3330	2660	2000	1890	1890
	W	1650	1470	1290	1100	910	730	550	360	330	330
15	Q	6140	5520	4910	4300	3680	3070	2460	1840	1740	1740
	W	1590	1410	1240	1060	880	700	530	350	320	320
10	Q	5610	5050	4490	3930	3370	2810	2250	1680	1590	1590
	W	1540	1360	1200	1020	850	680	510	340	310	310
7	Q	5300	4770	4240	3710	3180	2650	2120	1590	1500	1500
	W	1500	1330	1170	1000	830	660	500	330	300	300
6	Q	4520	4070	3620	3170	2710	2260	1810	1360	1280	1280
	W	1400	1240	1090	930	770	620	470	310	280	280
5	Q	4250	3830	3410	2980	2550	2130	1700	1280	1200	1200
	W	1390	1230	1080	920	760	620	470	310	280	280
2	Q	3850	3470	3090	2700	2310	1930	1540	1160	1090	1090
	W	1330	1180	1040	890	730	590	450	300	270	270
0	Q	3580	3230	2870	2510	2150	1790	1440	1080	1020	1020
	W	1290	1150	1010	860	710	570	430	290	260	260
-5	Q	2920	2630	2340	2050	1750	1460	1170	880	830	830
	W	1200	1060	930	800	660	530	400	270	240	240
-7	Q	2650	2390	2120	1860	1590	1320	1060	800	750	750
	W	1160	1030	900	770	640	510	390	260	230	230

Combination

Indoor units : RAV-HM801KRTP-E / TR

Outdoor unit : RAV-GV801ATP-E / TR

	Cooling		Heating	
	Capacity [Q (W)]	Power consumption [W (W)]	Capacity [Q (W)]	Power consumption [W (W)]
MINIMUM	1500	290	1500	260
RATING	6700	2200	7000	2200

Cooling

Outdoor temperature (℃)		Load(%)									
		100	90	80	70	60	50	40	30	20	10
46	Q	5750	4840	4310	3770	3230	2700	2160	1610	1200	1200
	W	2550	2420	2120	1810	1520	1200	890	590	360	360
43	Q	6010	5410	4810	4210	3610	3010	2400	1800	1350	1350
	W	2450	2170	1910	1630	1360	1080	800	540	320	320
40	Q	6270	5640	5020	4390	3760	3140	2510	1880	1400	1400
	W	2360	2090	1830	1560	1310	1040	770	510	310	310
35	Q	6700	6030	5360	4690	4020	3350	2680	2010	1500	1500
	W	2200	1950	1710	1460	1220	970	720	480	290	290
30	Q	7130	6420	5700	4990	4280	3560	2850	2140	1600	1600
	W	2040	1810	1590	1360	1130	900	670	450	270	270
25	Q	7560	6800	6050	5290	4540	3780	3020	2270	1690	1690
	W	1880	1670	1460	1250	1050	830	620	410	250	250
20	Q	7990	7190	6390	5590	4790	3990	3200	2400	1790	1790
	W	1730	1530	1340	1150	960	760	570	380	230	230

Heating

Outdoor temperature (℃)		Load(%)									
		100	90	80	70	60	50	40	30	20	10
20	Q	8800	7920	7040	6160	5280	4400	3520	2640	1890	1890
	W	2420	2150	1880	1610	1330	1070	790	520	290	290
15	Q	8110	7300	6490	5670	4860	4050	3240	2430	1740	1740
	W	2340	2070	1820	1550	1290	1030	770	500	280	280
10	Q	7420	6670	5930	5190	4450	3710	2970	2220	1590	1590
	W	2250	2000	1750	1490	1240	990	740	480	270	270
7	Q	7000	6300	5600	4900	4200	3500	2800	2100	1500	1500
	W	2200	1950	1710	1460	1210	970	720	470	260	260
6	Q	5970	5380	4780	4180	3580	2990	2390	1790	1280	1280
	W	2050	1820	1590	1360	1130	900	670	440	240	240
5	Q	5620	5060	4500	3930	3370	2810	2250	1680	1200	1200
	W	2040	1810	1580	1350	1120	890	670	440	240	240
2	Q	5090	4580	4070	3560	3050	2550	2040	1530	1090	1090
	W	1950	1730	1510	1290	1080	860	640	420	230	230
0	Q	4730	4270	3790	3320	2840	2370	1900	1420	1020	1020
	W	1900	1680	1470	1260	1050	830	620	410	220	220
-5	Q	3850	3470	3080	2700	2310	1930	1540	1160	830	830
	W	1760	1560	1360	1160	970	770	570	380	210	210
-7	Q	3500	3150	2800	2450	2100	1750	1400	1050	750	750
	W	1700	1510	1320	1130	940	750	560	360	200	200

Combination

Indoor units : RAV-HM1101KRTP-E /TR

Outdoor unit : RAV-GV1101ATP-E /TR

	Cooling		Heating	
	Capacity [Q (W)]	Power consumption [W (W)]	Capacity [Q (W)]	Power consumption [W (W)]
MINIMUM	3000	600	3000	600
RATING	9500	3800	10000	3300

Cooling

Outdoor temperature (°C)		Load(%)									
		100	90	80	70	60	50	40	30	20	10
46	Q	8160	6870	6110	5340	4580	3820	3060	2410	2410	2410
	W	4400	4130	3540	2980	2400	1810	1230	740	740	740
43	Q	8520	7670	6820	5970	5110	4260	3410	2690	2690	2690
	W	4240	3710	3190	2680	2150	1630	1100	670	670	670
40	Q	8890	8000	7110	6220	5330	4450	3560	2810	2810	2810
	W	4070	3570	3060	2570	2070	1560	1060	640	640	640
35	Q	9500	8550	7600	6650	5700	4750	3800	3000	3000	3000
	W	3800	3330	2860	2400	1930	1460	990	600	600	600
30	Q	10110	9100	8090	7080	6070	5050	4040	3190	3190	3190
	W	3530	3090	2660	2230	1790	1360	920	560	560	560
25	Q	10720	9650	8580	7500	6430	5360	4290	3390	3390	3390
	W	3260	2850	2450	2060	1650	1250	850	510	510	510
20	Q	11330	10200	9060	7930	6800	5660	4530	3580	3580	3580
	W	2980	2610	2250	1880	1520	1150	780	470	470	470

Heating

Outdoor temperature (°C)		Load(%)									
		100	90	80	70	60	50	40	30	20	10
20	Q	12570	11310	10060	8800	7540	6280	5030	3770	3770	3770
	W	3640	3210	2790	2360	1940	1510	1090	660	660	660
15	Q	11580	10420	9270	8110	6950	5790	4630	3470	3470	3470
	W	3510	3090	2690	2270	1870	1460	1050	640	640	640
10	Q	10590	9530	8470	7420	6360	5300	4240	3180	3180	3180
	W	3380	2980	2590	2190	1800	1400	1010	610	610	610
7	Q	10000	9000	8000	7000	6000	5000	4000	3000	3000	3000
	W	3300	2910	2530	2140	1760	1370	990	600	600	600
6	Q	8530	7680	6830	5970	5120	4270	3410	2560	2560	2560
	W	3080	2710	2360	2000	1640	1280	920	560	560	560
5	Q	8030	7230	6430	5620	4820	4020	3210	2410	2410	2410
	W	3060	2690	2340	1990	1630	1270	910	560	560	560
2	Q	7270	6550	5820	5090	4360	3640	2910	2180	2180	2180
	W	2930	2580	2250	1900	1560	1220	880	530	530	530
0	Q	6770	6090	5420	4730	4060	3390	2700	2030	2030	2030
	W	2850	2510	2180	1850	1520	1180	850	520	520	520
-5	Q	5500	4960	4410	3850	3300	2760	2200	1650	1650	1650
	W	2640	2320	2020	1710	1400	1100	790	480	480	480
-7	Q	5000	4500	4000	3500	3000	2500	2000	1500	1500	1500
	W	2550	2250	1960	1660	1360	1060	760	460	460	460

2-3-6. Air speed distribution

RAV-HM561KRTP-E / TR

Cooling

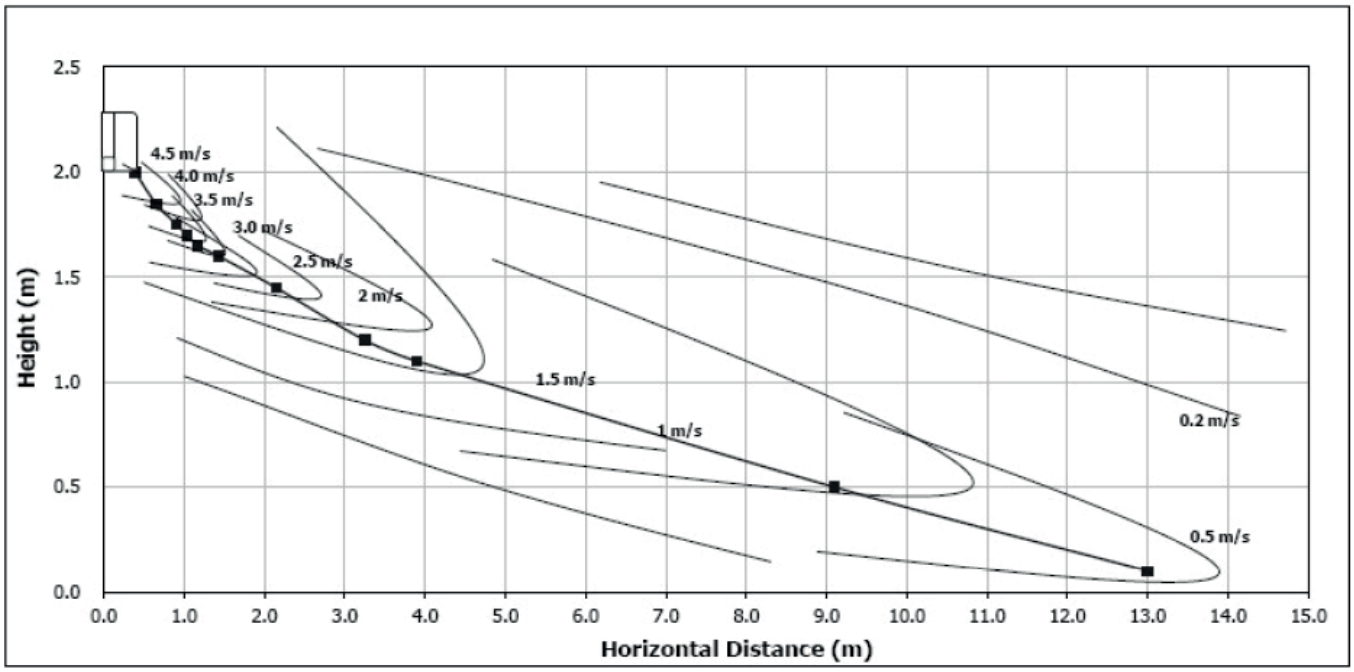

Heating

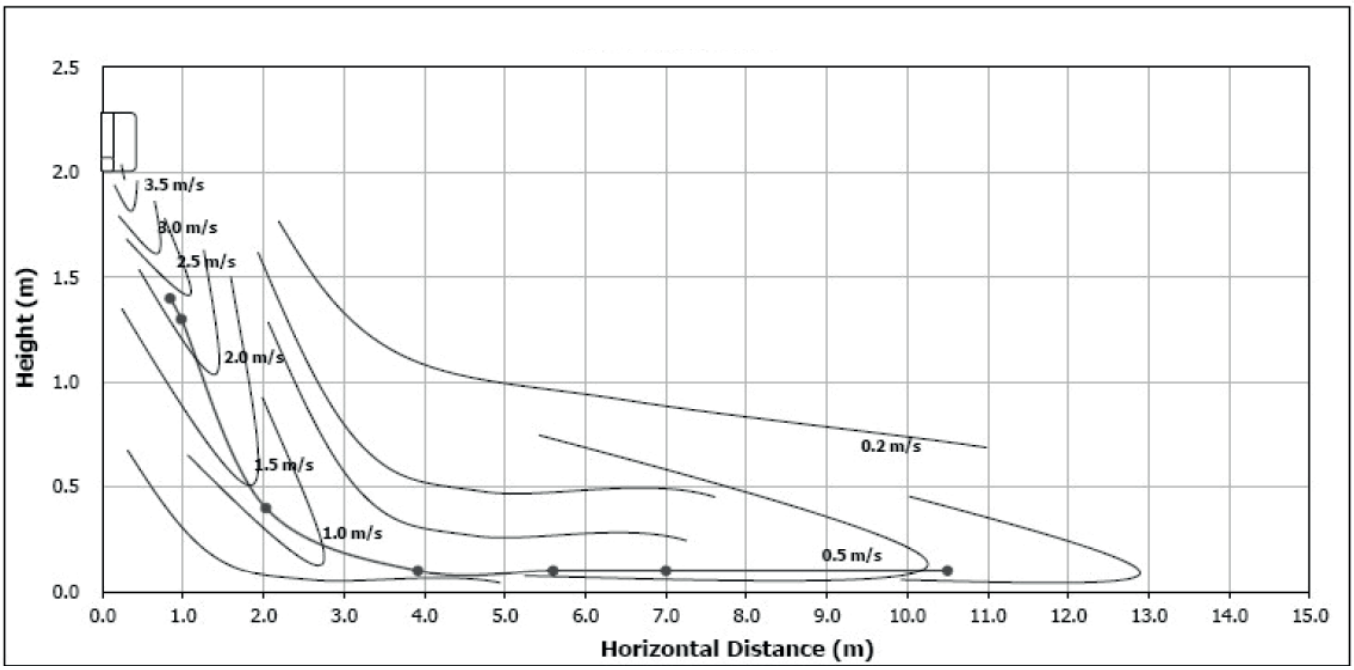

RAV-HM801KRTP-E / TR

Cooling

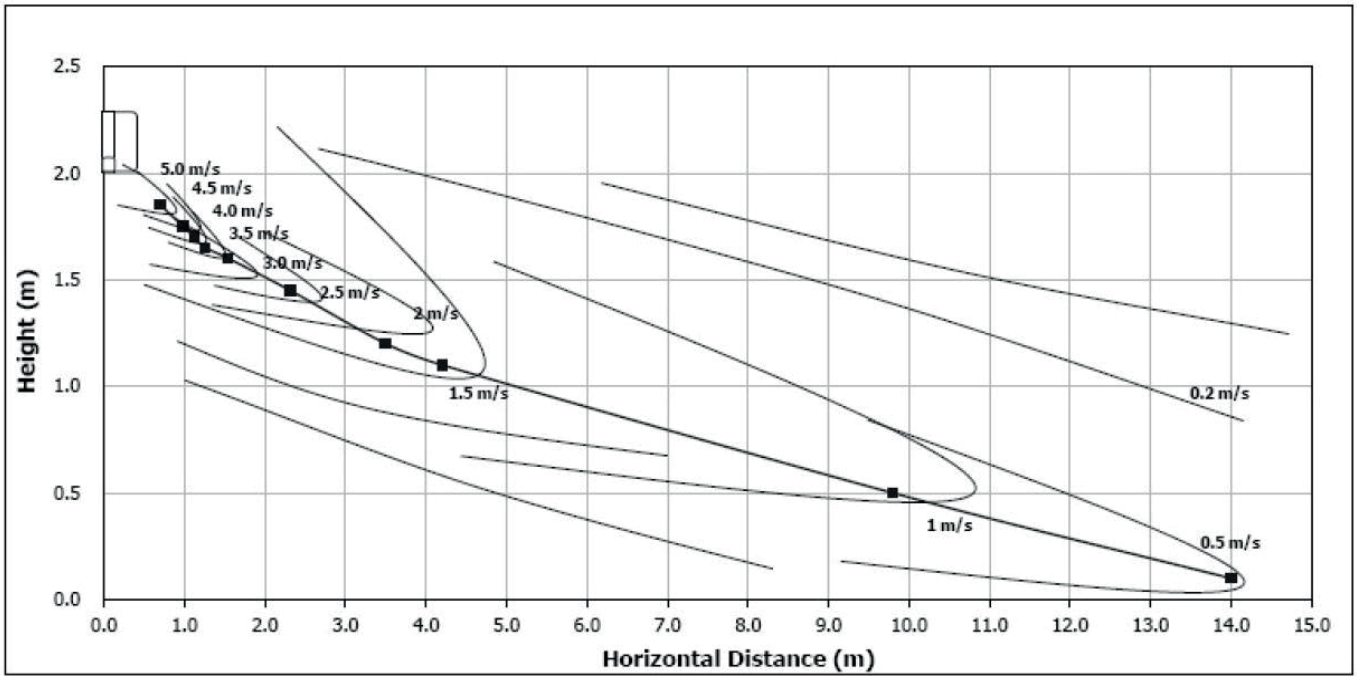

Heating

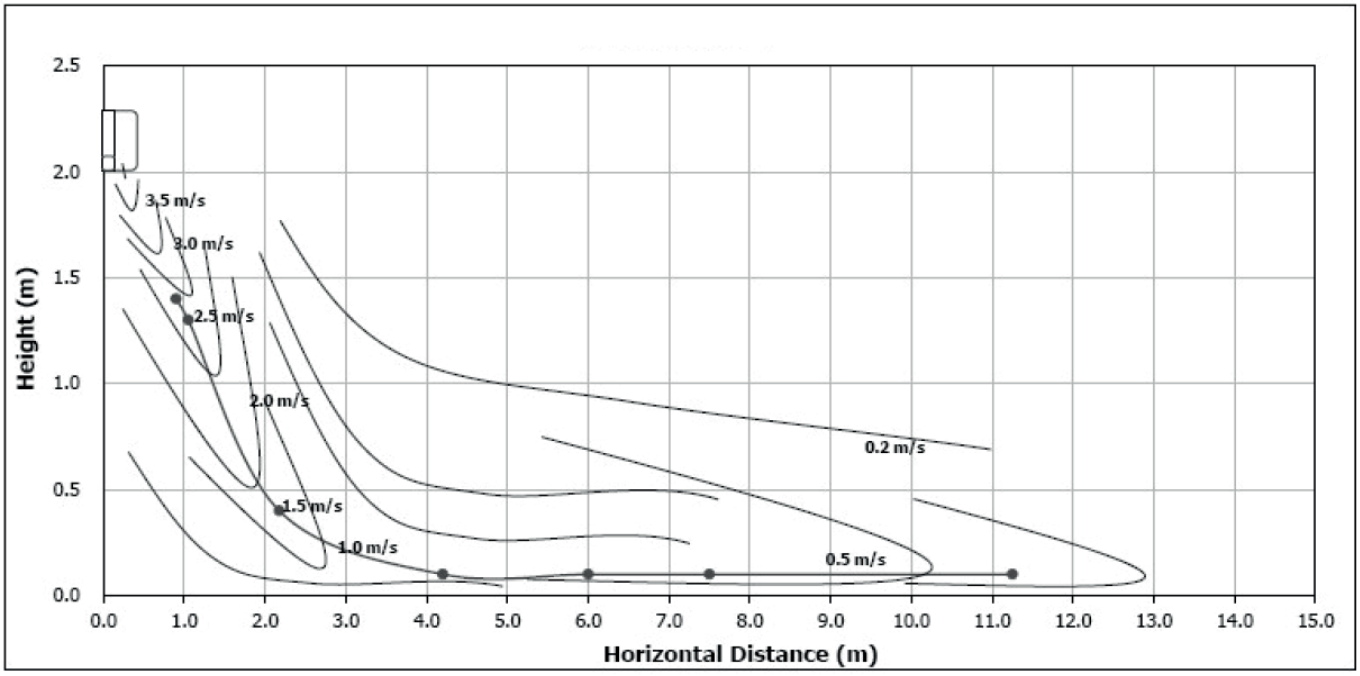

RAV-HM1101KRTP-E / TR

Cooling

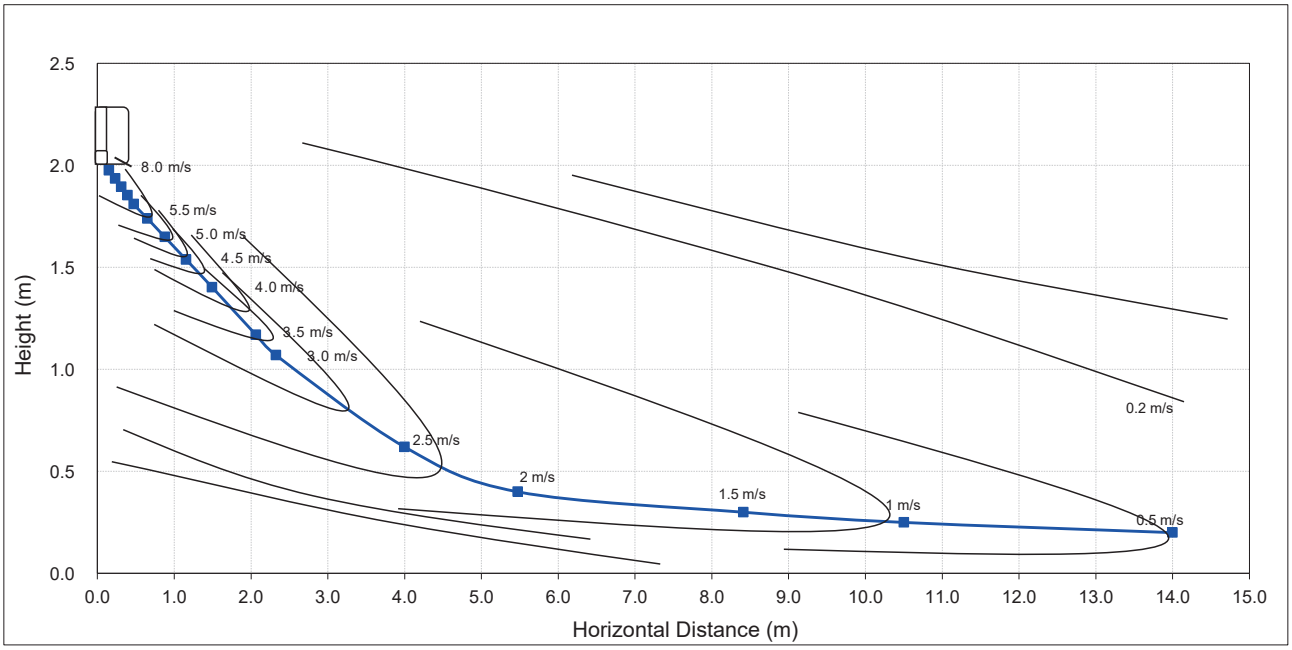

Heating

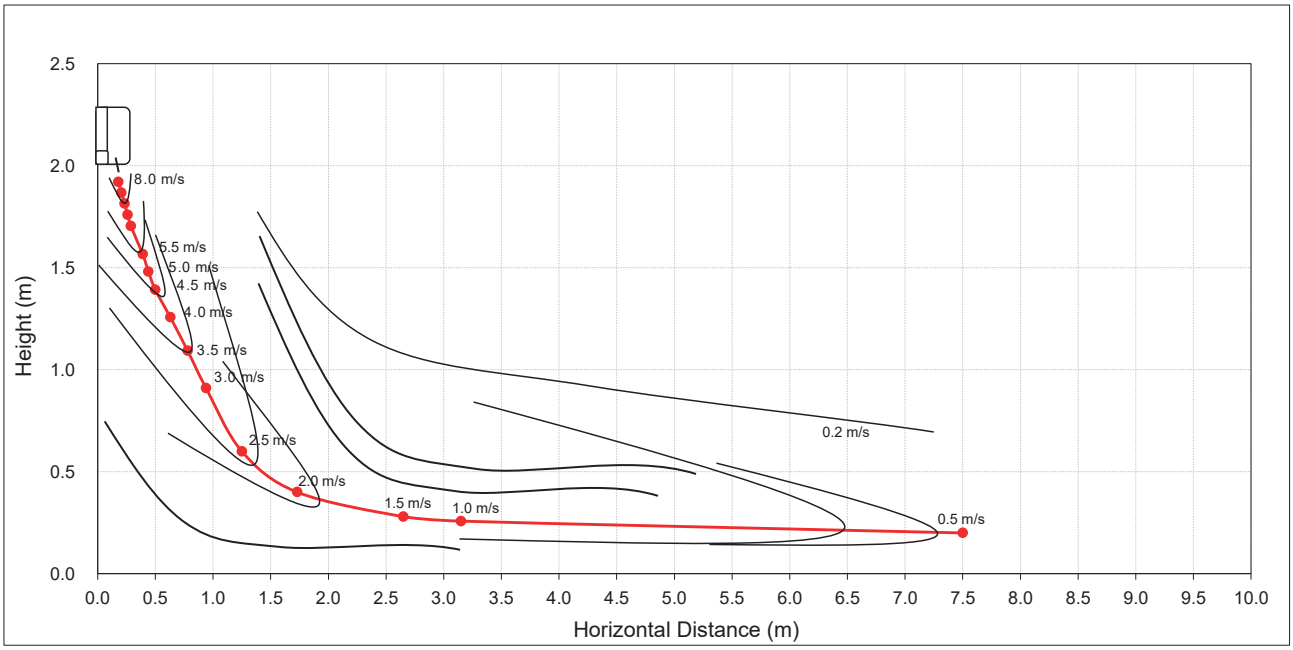

2-3-7. Sound Characteristics (NC curve)

RAV-HM561KRTP-E / TR

Specification （d B）			
Fan tap	H	M	L
Sound pressure level (dB(A))	42	39	35

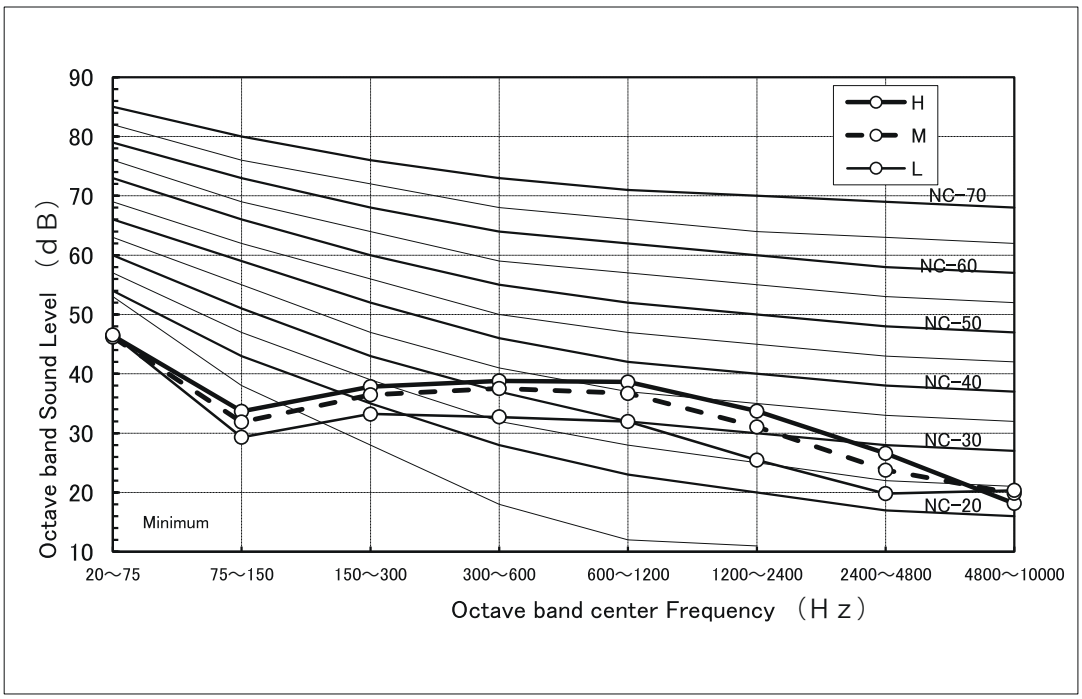

RAV-HM801KRTP-E / TR

Specification （d B）			
Fan tap	H	M	L
Sound pressure level (dB(A))	45	41	35

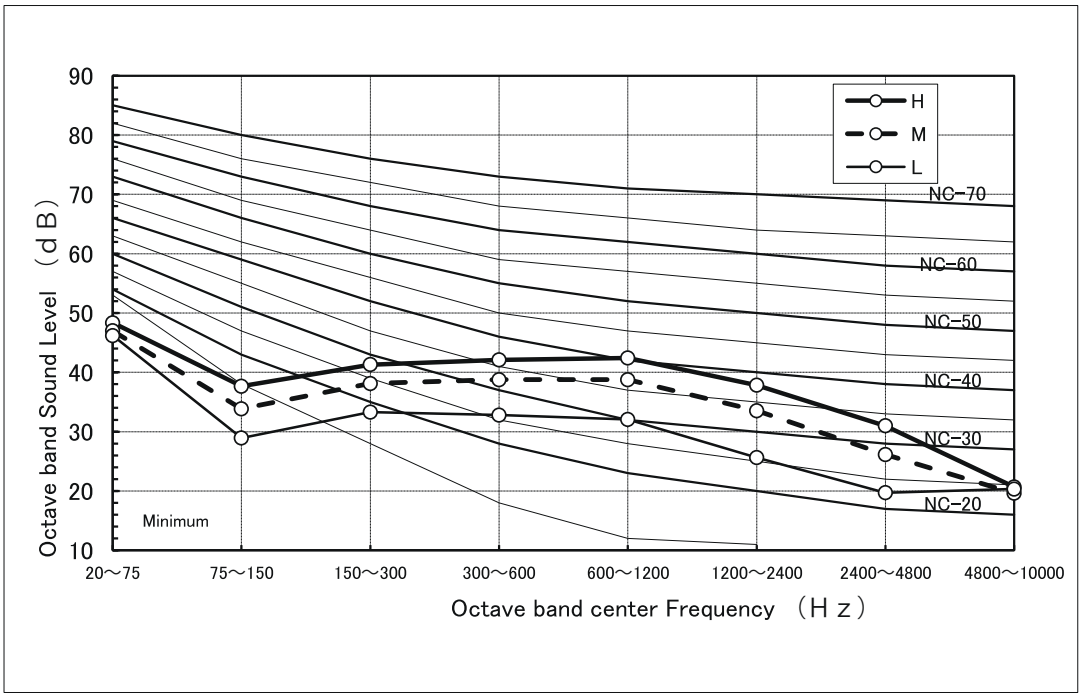

RAV-HM1101KRTP-E / TR

Specification （d B）			
Fan tap	H	M	L
Sound pressure level (dB(A))	49	45	41

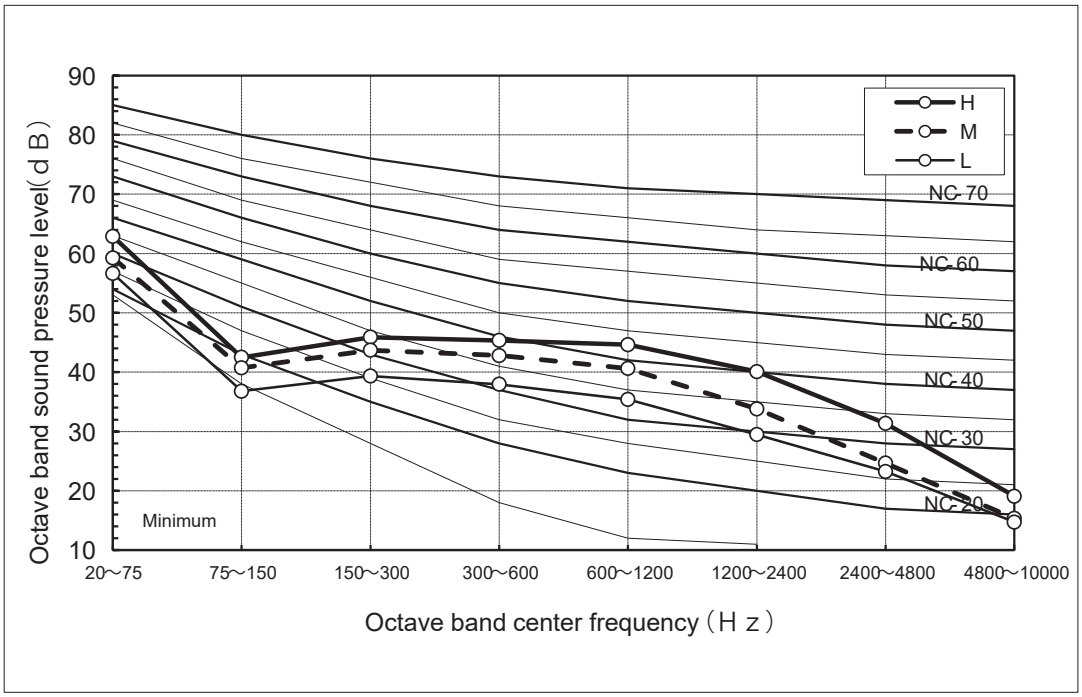

3. Outdoor Unit

3-1. Specifications

3-2. Dimension

3-3. Wiring Diagrams

3-4. Rrfrigerant Cycle Diagram

3-5. Sound Characteristic

3-6. Connecting Pipe Length and Lift Difference Between Indoor Units VS. Capacity Correction Value

3-1 Specification

Model name	Outdoor unit RAV-GV		561ATP-E / TR	801ATP-E / TR
Power supply			1 phase 220-240V, 50Hz 1 phase 220V, 60Hz (Power exclusive to outdoor is required.)	
Compressor	Type		Hermetic compressor	
	Motor	(kW)	1.1	1.1
	Pole		6	6
Refrigerant charged		(kg)	0.9	1.4
Refrigerant control			Pulse motor valve	
Inter connecting pipe	Standard length	(m)	7.5	7.5
	Min. length	(m)	5	5
	Max. total length	(m)	30	30
	Additional refrigerant charge under long piping connector		20 g/m (21m to 30m)	35 g/m (21m to 30m)
	Height difference: Outdoor lower	(m)	20	20
	Height difference: Outdoor higher	(m)	20	20
Outer dimension	Height	(mm)	550	550
	Width	(mm)	780	780
	Depth	(mm)	290	290
Appearance			Silky shade (Muncel 1Y8.5/0.5)	
Total weight		(kg)	36	39
Heat exchanger			Finned tube	
Fan unit	Fan		Propeller fan	
	Standard air flow high	(m³/min.)	40	45
	Motor	(W)	43	43
Connecting pipe	Gas side	(mm)	Ø 12.7	Ø 15.9
	Liquid side	(mm)	Ø 6.4	Ø 9.5
Sound pressure level		Cooling/Heating (dB·A)	46/48	48/52
Sound power level		Cooling/Heating (dB·A)	63/65	65/69
Outside air temperature, Cooling		°C (Dry bulb temp.)	46 to -15	
Outside air temperature, Heating		°C (Wet bulb temp.)	15 to -15	

Model name	Outdoor unit	RAV-GV	1101ATP-E / TR
Power supply			1 phase 220-240v, 50 Hz 1 phase 220v, 60 Hz (Power exclusive to outdoor is required)
Compressor	Type		Hermetic compressor
	Motor	(kW)	1.5
	Pole		6
Refrigerant charged		(kg)	1.9
Refrigerant control			Pulse motor valve
Inter connecting pipe	Standard length	(m)	7.5
	Min. length	(m)	5
	Max. total length	(m)	30
	Additional refrigerant charge under long piping connector		No addition charge
	Height difference: Outdoor lower	(m)	30
	Height difference: Outdoor higher	(m)	30
Outer dimension	Height	(mm)	630
	Width	(mm)	800
	Depth	(mm)	300
Appearance			Silky shade (Muncel 1Y8.5/0.5)
Total weight			45
Heat exchanger			Finned tube
Fan unit	Fan		Propeller fan
	Standard air flow high	(m^3 / min)	48
	Motor	(W)	71
Connecting pipe	Gas side	(mm)	Ø 15.88
	Liquid side	(mm)	Ø 9.52
Sound pressure level		Cooling / Heating (dB A)	51 / 53
Sound power level		Cooling / Heating (dB A)	68 / 70
Outside air temperature, Cooling		°C	46 to -15
Outside air temperature, Heating		°C	15 to -15

Model name	Outdoor unit	RAV-GV	1401ATP-E / TR
Power supply			1 phase 220-240V, 50Hz 1 phase 220V, 60Hz (Power exclusive to outdoor is required.)
Compressor	Type		Hermetic compressor
	Motor	(kW)	2.90
	Pole		6
Refrigerant charged		(kg)	2.2
Refrigerant control			Pulse motor valve
Inter connecting pipe	Standard length	(m)	7.5
	Min. length	(m)	5
	Max. total length	(m)	30
	Additional refrigerant charge under long piping connector		No addition charge
	Height difference: Outdoor lower	(m)	30
	Height difference: Outdoor higher	(m)	30
Outer dimension	Height	(mm)	710
	Width	(mm)	900
	Depth	(mm)	320
Appearance			Silky shade (Muncel 1Y8.5/0.5)
Total weight		(kg)	57
Heat exchanger			Finned tube
Fan unit	Fan		Propeller fan
	Standard air flow high	(m^3/min)	59
	Motor	(W)	100
Connecting pipe	Gas side	(mm)	Ø 15.9
	Liquid side	(mm)	Ø 9.5
Sound pressure level		Cooling/Heating (dB·A)	53 / 60
Sound power level		Cooling/Heating (dB·A)	70 / 77
Outside air temperature, Cooling		°C (Dry bulb temp.)	46 to -15
Outside air temperature, Heating		°C (Wet bulb temp.)	15 to -15

Model name	Outdoor unit RAV-GV			1601ATP- E1
Power supply				1 phase 220-240V, 50Hz 1 phase 220V, 60Hz (Power exclusive to outdoor is required)
Compressor	Type			Harmonic Rotary compressor
	Motor		(kW)	2.43
	Pole			6
Refrigerant charged			(kg)	2.2
Refrigerant control				Pulse motor valve
Inter connecting pipe	Standard length		(m)	7.5
	Min. length		(m)	5
	Max. total length		(m)	30
	Height difference	Outdoor lower	(m)	30
		Outdoor higher	(m)	30
Outer dimension	Height		(mm)	890
	Width		(mm)	900
	Depth		(mm)	320
Appearance				Silky shade (Muncel 1Y8.5/0.5)
Total weight			(kg)	63
Heat exchanger				Finned tube
Fan unit	Fan			Propeller fan
	Standard air flow high		(m^3/h)	5000
	Motor		(W)	100
Connecting pipe	Gas side		(mm)	15.9
	Liquid side		(mm)	9.5
Sound pressure level			Cooling/Heating (dB·A)	57/59
Sound power level			Cooling/Heating (dB·A)	74/76
Outside air temperature, Cooling			°C (Dry bulb temp.)	46 to -15
Outside air temperature, Heating			°C (Wet bulb temp.)	15 to -15

3-2. Dimension

RAV-GV*___1ATP-E / TR (*56 / 80)

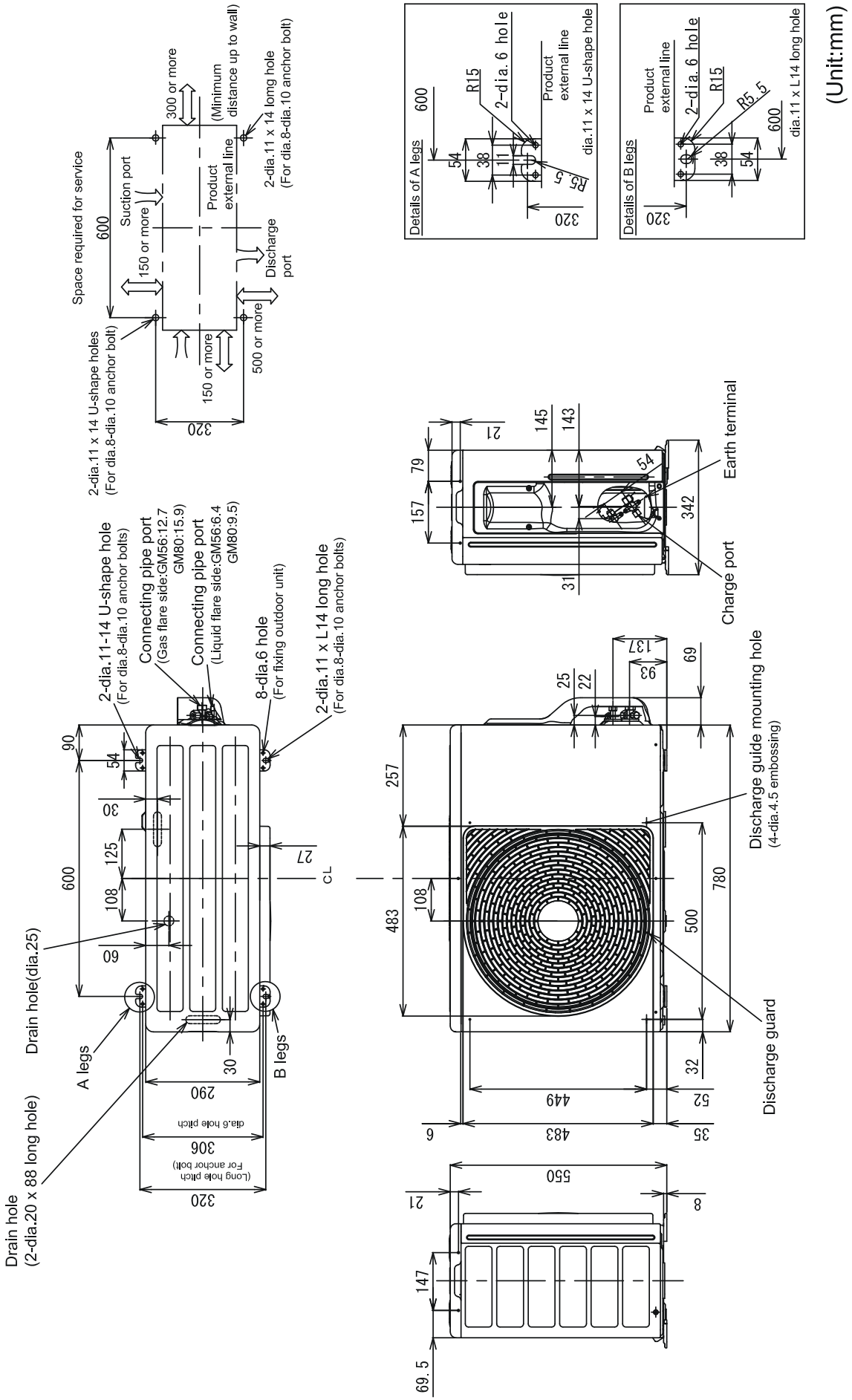

RAV-GV1101ATP-E / TR

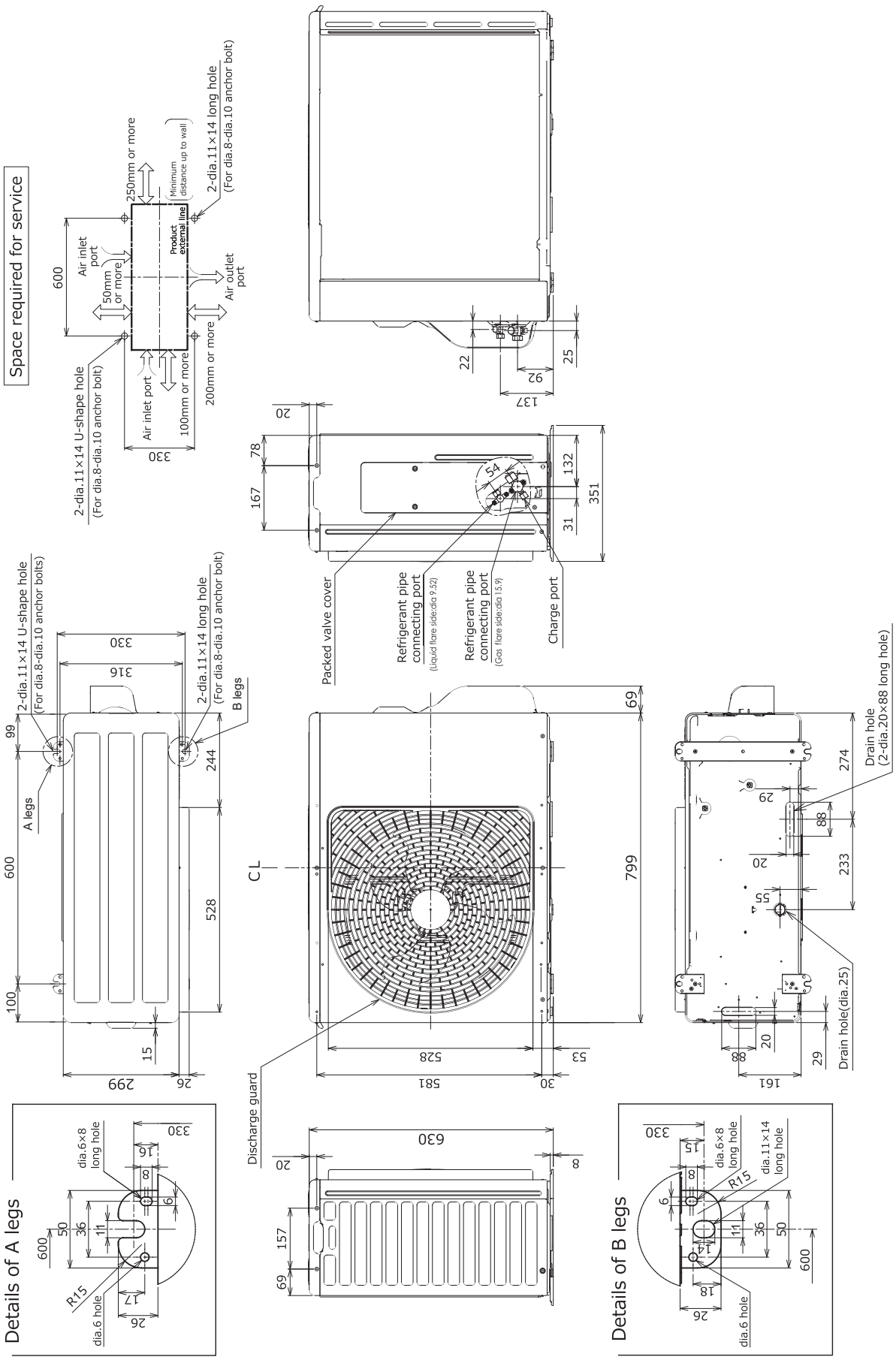

RAV-GV1401ATP-E / TR

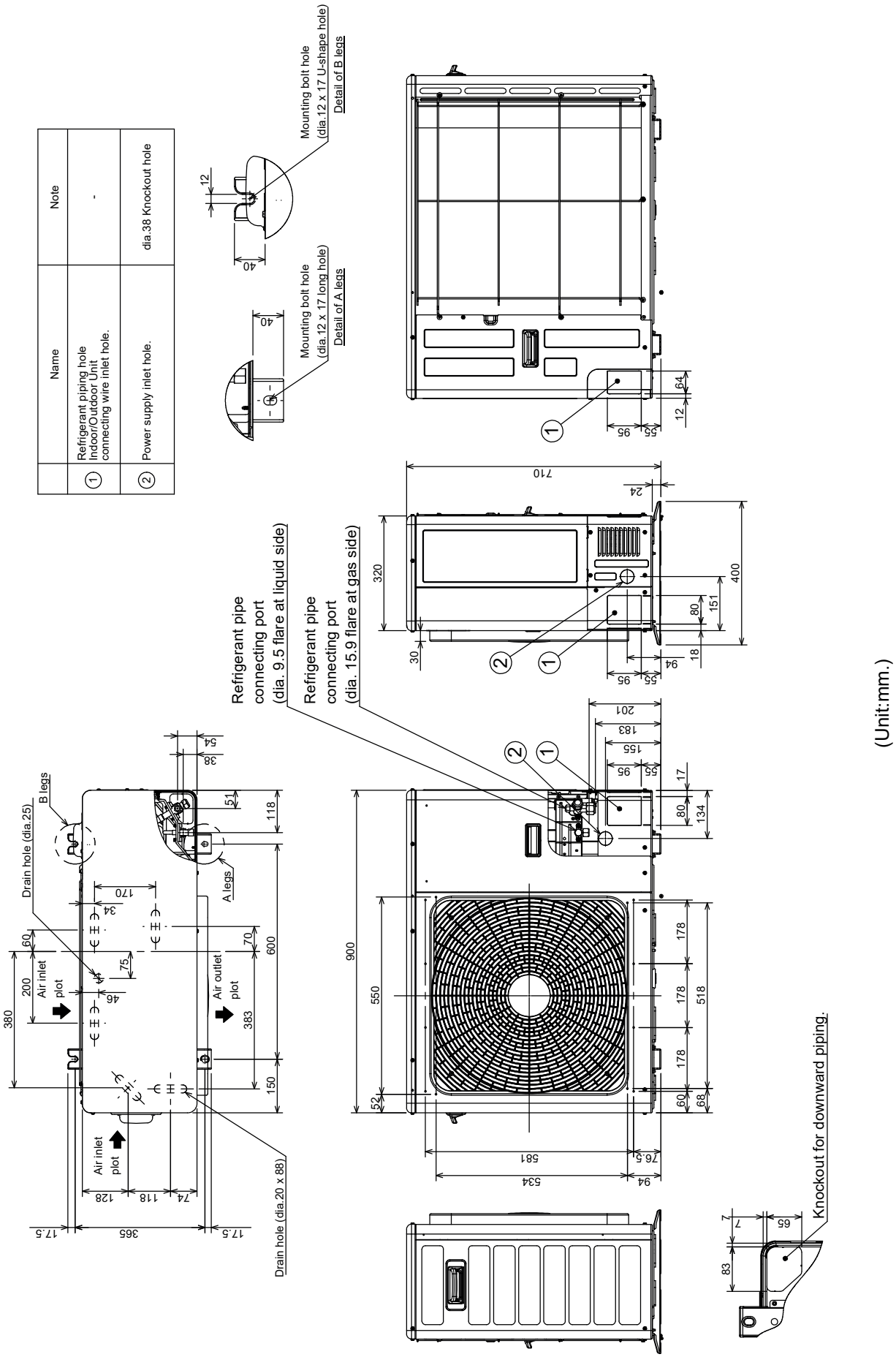

RAV-GV1601ATP-E1 / TR

	Name	Note
①	Refrigerant piping hole Indoor/Outdoor Unit connecting wire inlet hole	—
②	Power supply inlet hole	dia.38 Knockout hole

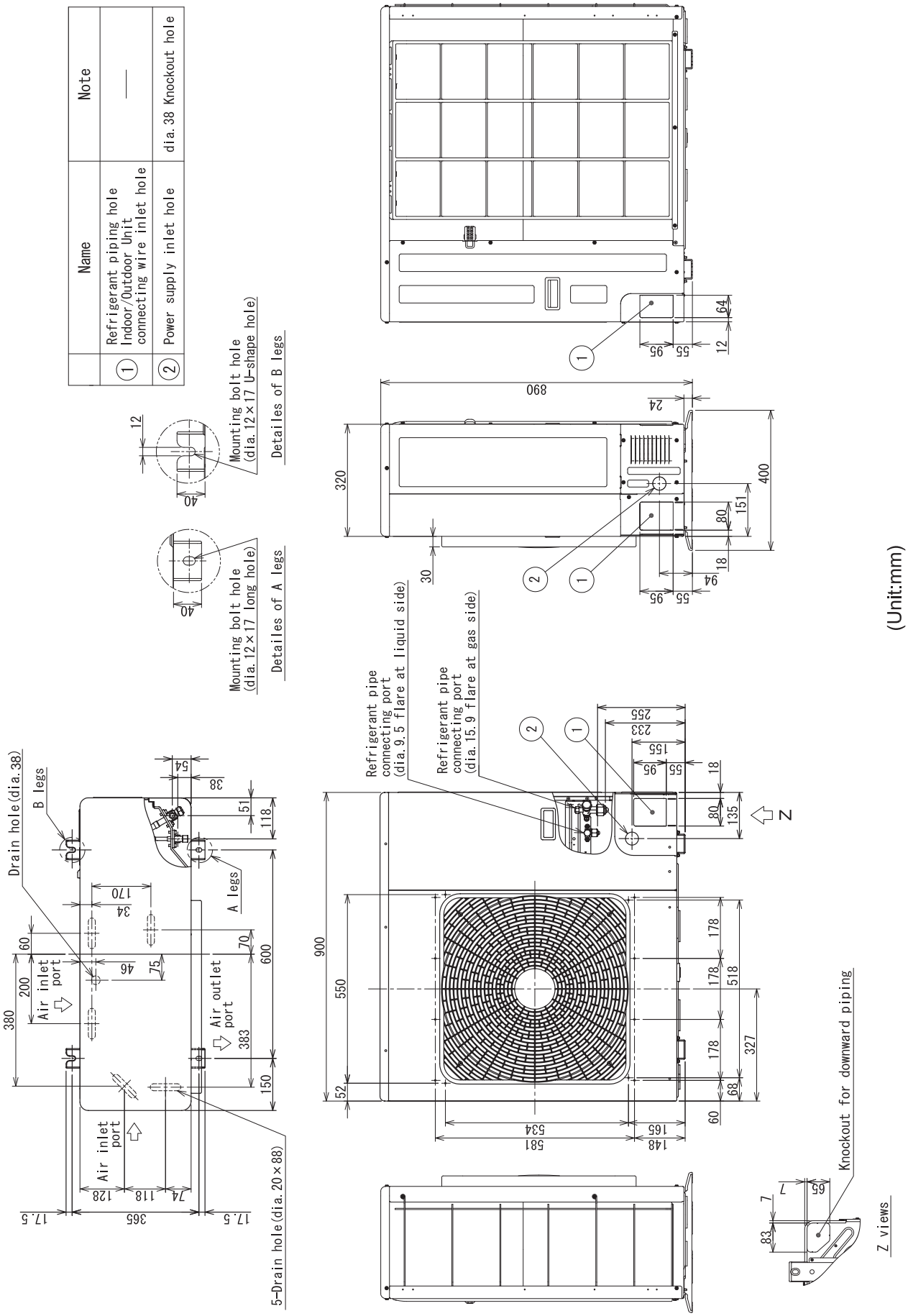

3-3. Wiring Diagram

RAV-GV*__1ATP-E / TR (*56 / 80)

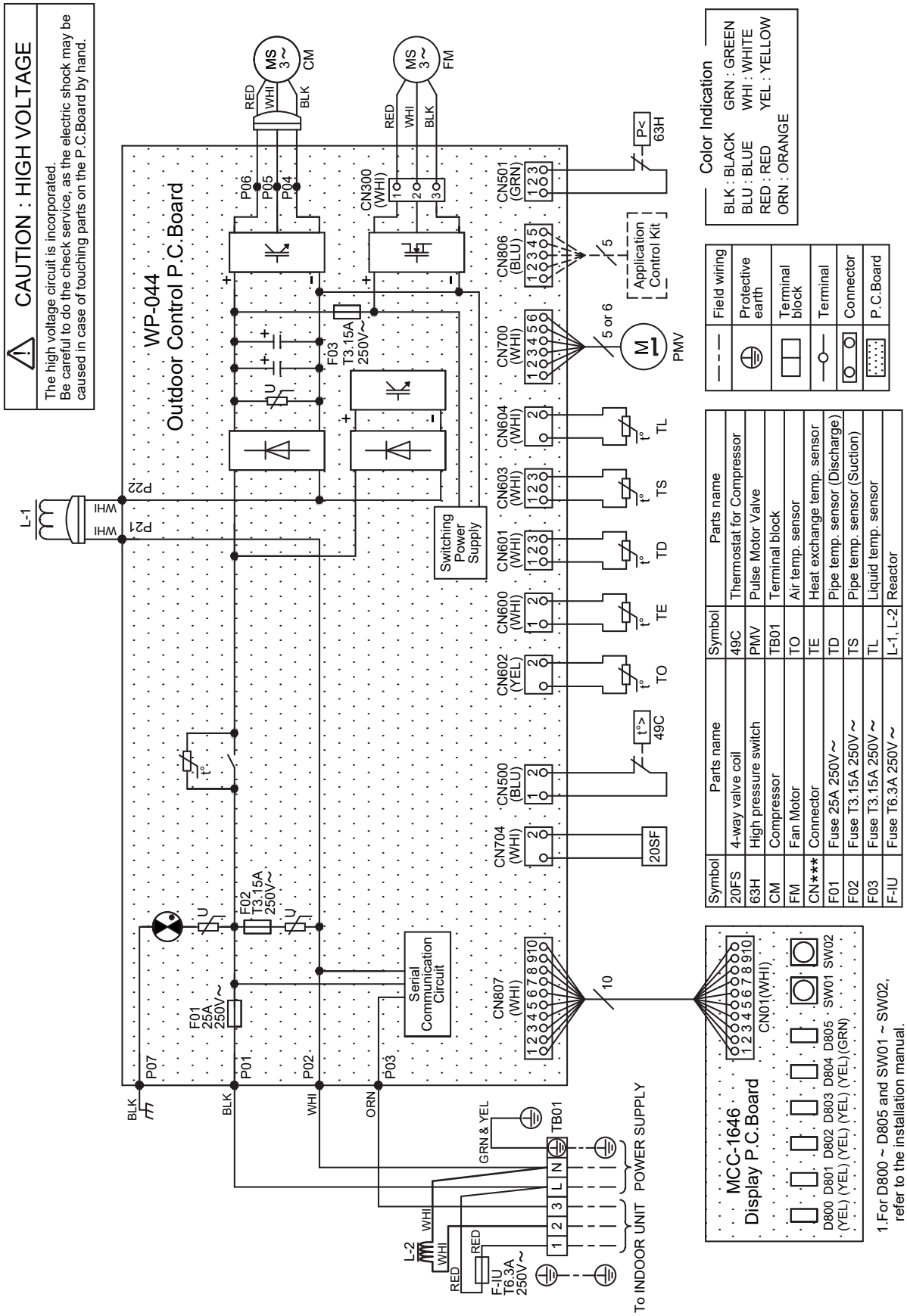

Symbol	Parts name
20FS	4-way valve coil
63H	High pressure switch
CM	Compressor
FM	Fan Motor
CN***	Connector
F01	Fuse 25A 250V~
F02	Fuse T3.15A 250V~
F03	Fuse T3.15A 250V~
F-IU	Fuse T6.3A 250V~

Symbol	Parts name
49C	Thermostat for Compressor
PMV	Pulse Motor Valve
TB01	Terminal block
TO	Air temp. sensor
TE	Heat exchange temp. sensor
TD	Pipe temp. sensor (Discharge)
TS	Pipe temp. sensor (Suction)
TL	Liquid temp. sensor
L-1, L-2	Reactor

RAV-GV1101ATP-E / TR

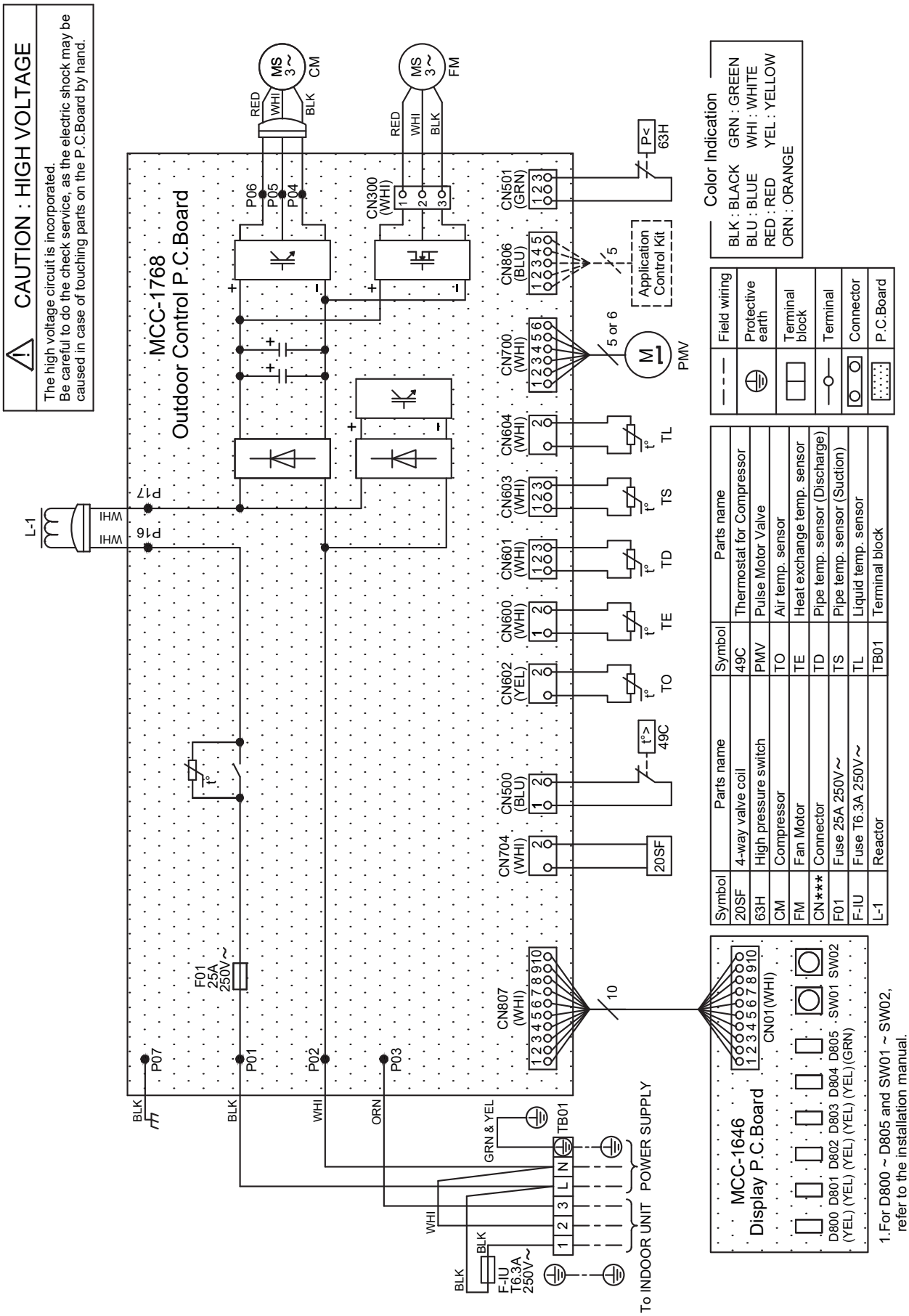

Symbol	Parts name
20SF	4-way valve coil
63H	High pressure switch
CM	Compressor
FM	Fan Motor
CN***	Connector
F01	Fuse 25A 250V~
F-IU	Fuse T6.3A 250V~
L-1	Reactor

Symbol	Parts name
49C	Thermostat for Compressor
PMV	Pulse Motor Valve
TO	Air temp. sensor
TE	Heat exchange temp. sensor
TD	Pipe temp. sensor (Discharge)
TS	Pipe temp. sensor (Suction)
TL	Liquid temp. sensor
TB01	Terminal block

RAV-GV1401ATP-E / TR

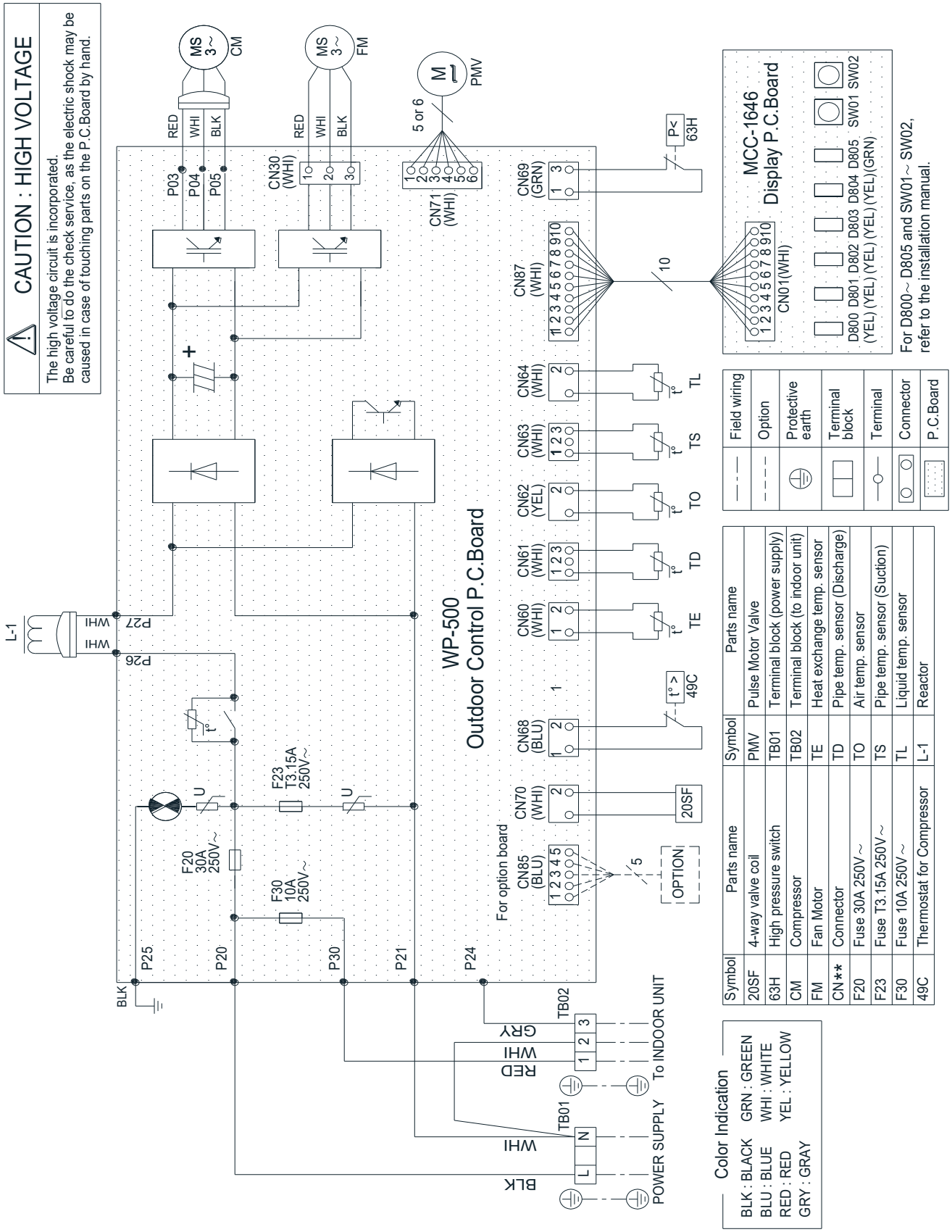

Symbol	Parts name	Symbol	Parts name
20SF	4-way valve coil	PMV	Pulse Motor Valve
63H	High pressure switch	TB01	Terminal block (power supply)
CM	Compressor	TB02	Terminal block (to indoor unit)
FM	Fan Motor	TE	Heat exchange temp. sensor
CN**	Connector	TD	Pipe temp. sensor (Discharge)
F20	Fuse 30A 250V~	TO	Air temp. sensor
F23	Fuse T3.15A 250V~	TS	Pipe temp. sensor (Suction)
F30	Fuse 10A 250V~	TL	Liquid temp. sensor
49C	Thermostat for Compressor	L-1	Reactor

RAV-GV1601ATP-E1 / TR

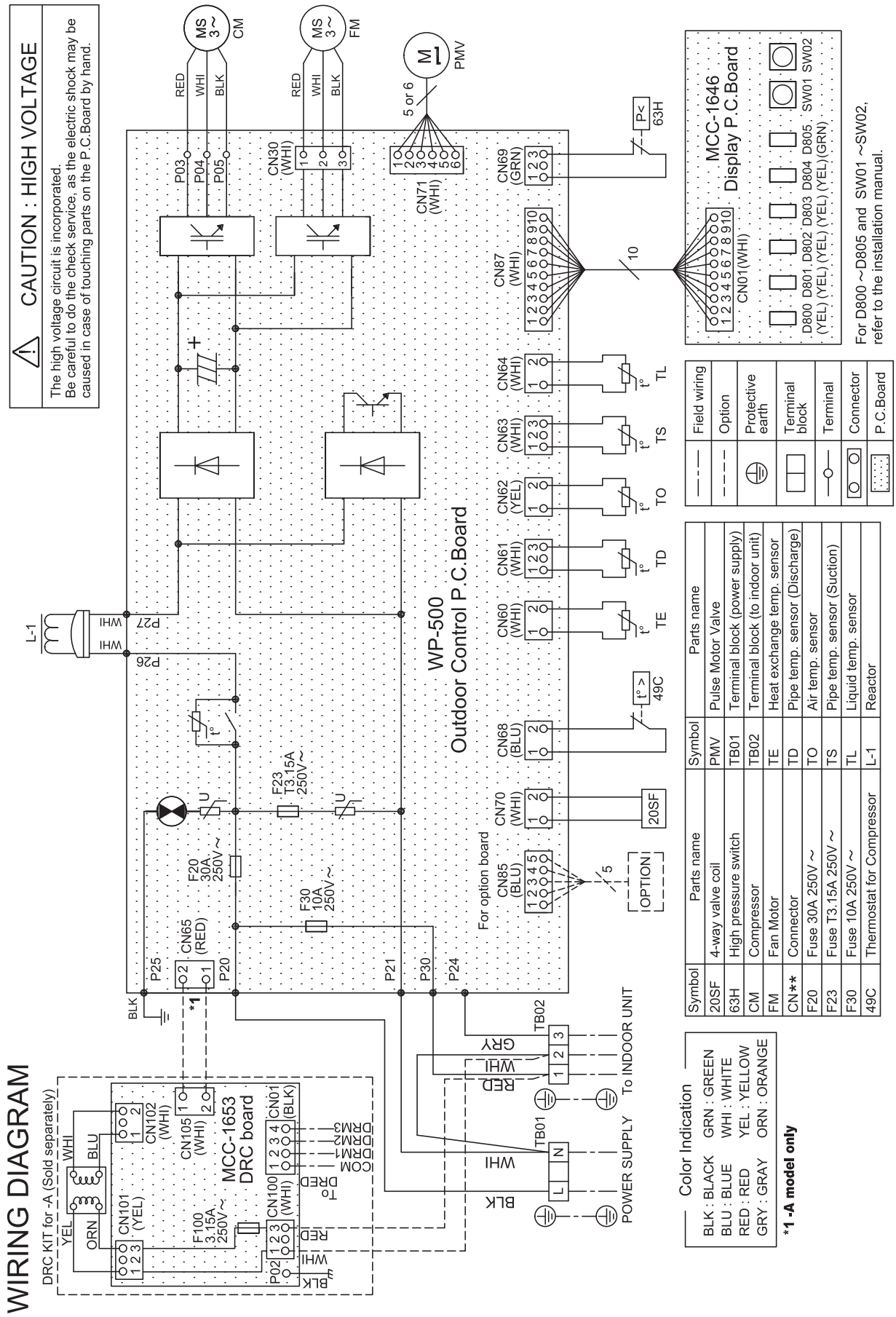

Symbol	Parts name
20SF	4-way valve coil
63H	High pressure switch
CM	Compressor
FM	Fan Motor
CN**	Connector
F20	Fuse 30A 250V ~
F23	Fuse T3.15A 250V ~
F30	Fuse 10A 250V ~
49C	Thermostat for Compressor

Symbol	Parts name
PMV	Pulse Motor Valve
TB01	Terminal block (power supply)
TB02	Terminal block (to indoor unit)
TE	Heat exchange temp. sensor
TD	Pipe temp. sensor (Discharge)
TO	Air temp. sensor
TS	Pipe temp. sensor (Suction)
TL	Liquid temp. sensor
L-1	Reactor

	Field wiring
	Option
	Protective earth
	Terminal block
	Terminal
	Connector
	P.C.Board

3-4. Refrigerant cycle diagram

RAV-GV561ATP-E / TR

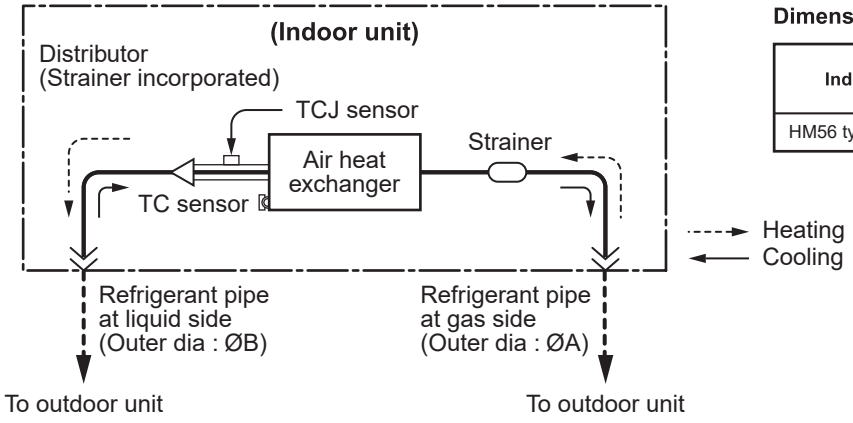

Dimension table

Indoor unit	Outer diameter of refrigerant pipe	
	Gas side ØA	Liquid side ØB
HM56 type	12.7	6.4

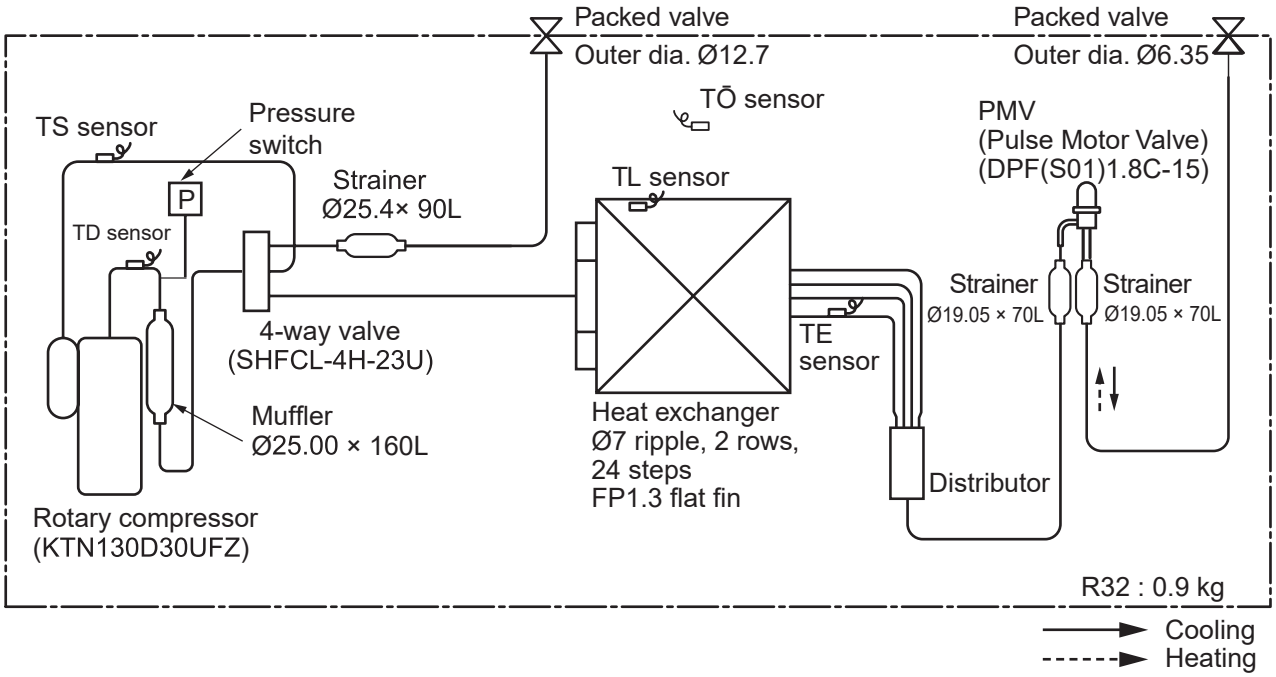

		Pressure				Pipe surface temperature (°C)				Compressor revolutions per second (rps) *	Indoor fan	Indoor/Outdoor temp. conditions (DB/WB) (°C)	
		(MPa)		(kg/cm²G)		Discharge (TD)	Suction (TS)	Indoor heat exchanger (TC)	Outdoor heat exchanger (TE)				
		Pd	Ps	Pd	Ps							Indoor	Outdoor
Cooling	Standard	3.11	0.96	31.7	9.8	90	13	12	43	62	HIGH	27/19	35/-
	Overload	3.33	1.48	34.0	11.0	73	21	17	53	67	HIGH	32/23	46/-
	Low load	2.24	0.86	22.4	8.76	49	7	5	30	50	LOW	18/13	-15/-
Heating	Standard	2.27	0.63	23.1	6.4	82	2	36	1	73	HIGH	20/-	7/6
	Overload	2.84	1.02	29.0	10.4	80	17	47	11	50	LOW	29/-	22/15.5
	Low load	1.31	0.30	13.3	3.05	29	-14	31	-15	73	HIGH	0/-	-15/-

* 4 poles are provided to this compressor.
The compressor frequency (Hz) measured with a clamp meter is 2 times of revolutions (rps) of the compressor.

RAV-GV801ATP-E / TR

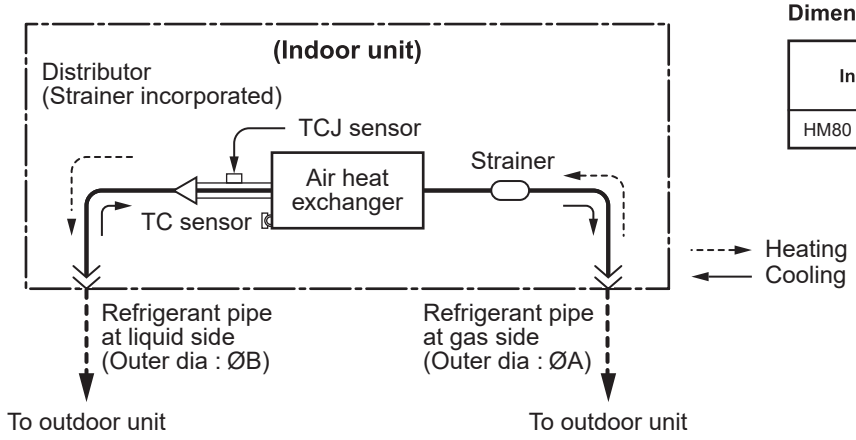

Dimension table

Indoor unit	Outer diameter of refrigerant pipe	
	Gas side ØA	Liquid side ØB
HM80 type	15.9	9.5

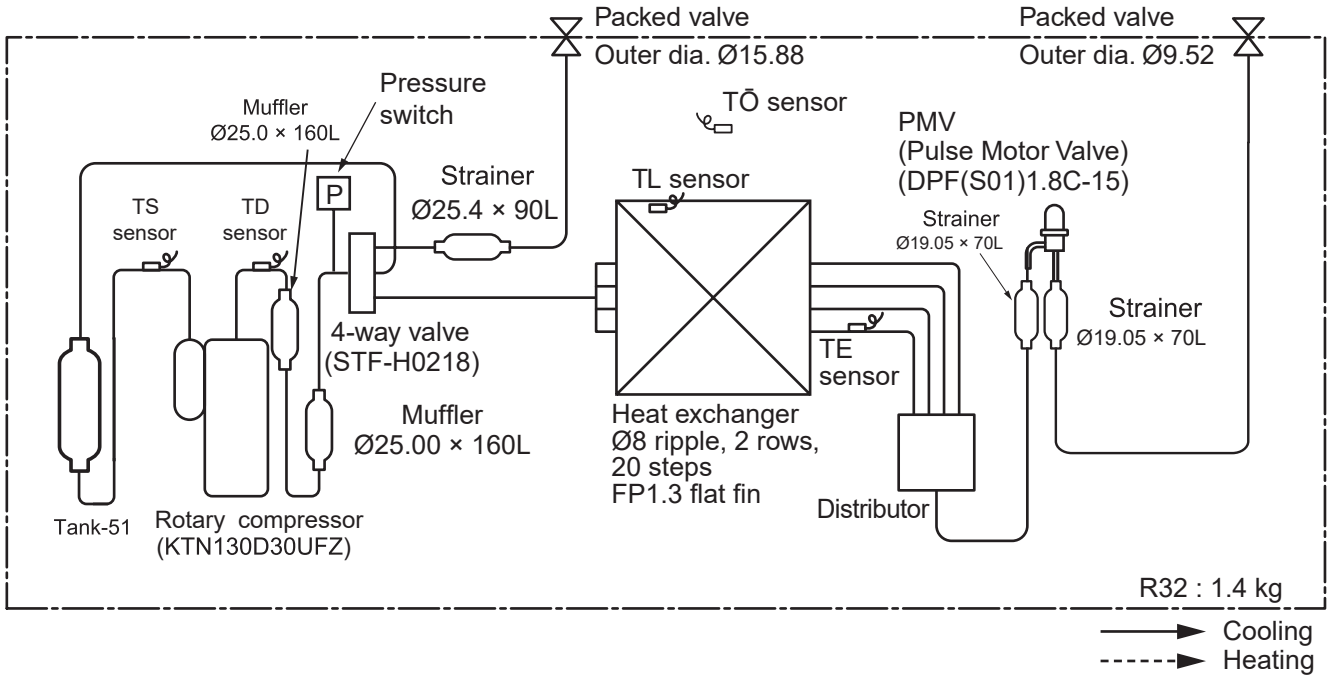

		Pressure				Pipe surface temperature (°C)				Compressor revolutions per second (rps) *	Indoor fan	Indoor/Outdoor temp. conditions (DB/WB) (°C)	
		(MPa)		(kg/cm²G)		Discharge (TD)	Suction (TS)	Indoor heat exchanger (TC)	Outdoor heat exchanger (TE)				
		Pd	Ps	Pd	Ps							Indoor	Outdoor
Cooling	Standard	3.27	0.89	33.3	9.1	95	11	10	41	90	HIGH	27/19	35/-
	Overload	3.50	1.54	35.7	15.7	65	26	24	56	68	HIGH	32/23	46/-
	Low load	2.45	0.88	25.0	0.9	50	7	8	33	53	HIGH	18/13	-15/-
Heating	Standard	2.61	0.64	26.6	6.5	88	3	41	1	95	HIGH	20/-	7/6
	Overload	2.86	1.03	29.0	10.5	80	16	46	12	51	HIGH	29/-	22/15.5
	Low load	1.34	0.30	13.6	3.05	30	-23	33	-22	75	HIGH	0/-	-15/-

* 4 poles are provided to this compressor.
The compressor frequency (Hz) measured with a clamp meter is 2 times of revolutions (rps) of the compressor.

RAV-GV1101ATP-E / TR

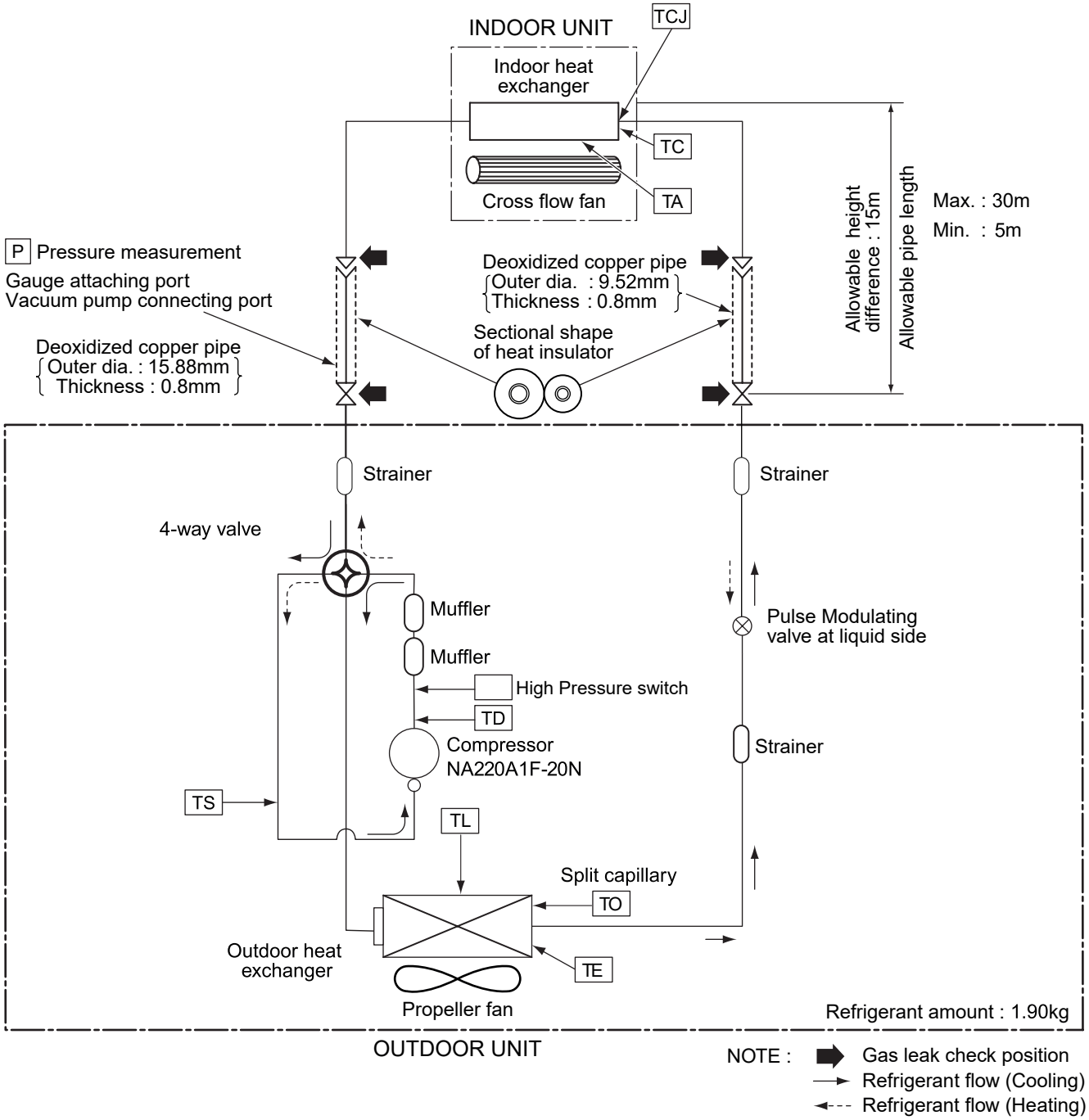

		Pressure				Pipe surface temperature (°C)				Compressor drive revolution frequency (rps)	Indoor fan	Indoor/Outdoor temp.conditions (DB/WB) (°C)	
		(MPa)		(kg/cm2)		Discharge	Suction	Indoor heat exchanger	Outdoor heat exchanger				
		Pd	Ps	Pd	Ps	(TD)	(TS)	(TC)	(TE)			Indoor	Outdoor
Cooling	Standard	3.14	0.96	32.0	9.8	84	13	12	37	72	HIGH	27/19	35/–
	Overload	3.52	1.28	35.9	9.8	74	25	31	54	40	HIGH	32/24	46/–
	Low load	2.12	0.78	21.6	8.0	60	5	4	0	54	LOW	18/15.5	-15/–
Heating	Standard	2.30	0.63	23.5	6.4	70	0	40	1	81	HIGH	20/-	7/6
	Overload	3.31	0.98	33.7	10.0	68	13	48	14	57	LOW	28/-	24/18
	Low load	1.42	0.32	14.5	3.3	30	20	23	-17	90	HIGH	0/-	-15/–

* 4 poles are provided to this compressor.
The compressor frequency (Hz) measured with a clamp meter is 2 times of revolutions (rps) of the compressor.

RAV-GV1401ATP-E / TR

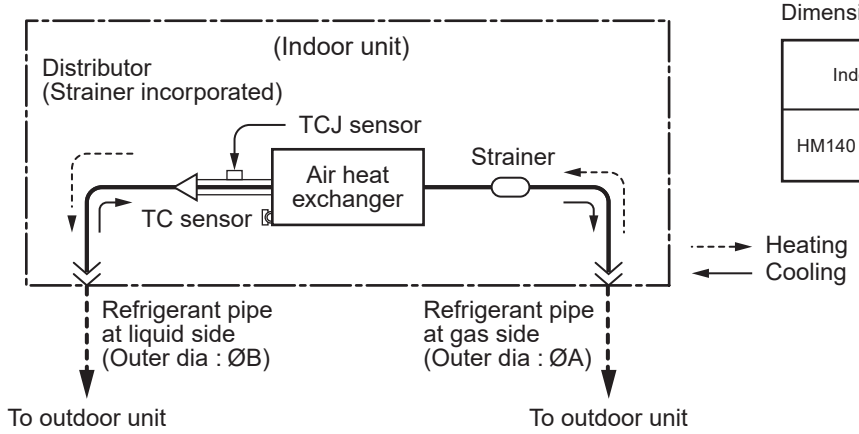

Dimension table

Indoor unit	Outer diameter of refrigerant pipe	
	Gas side ØA	Liquid side ØB
HM140 type	15.9	9.5

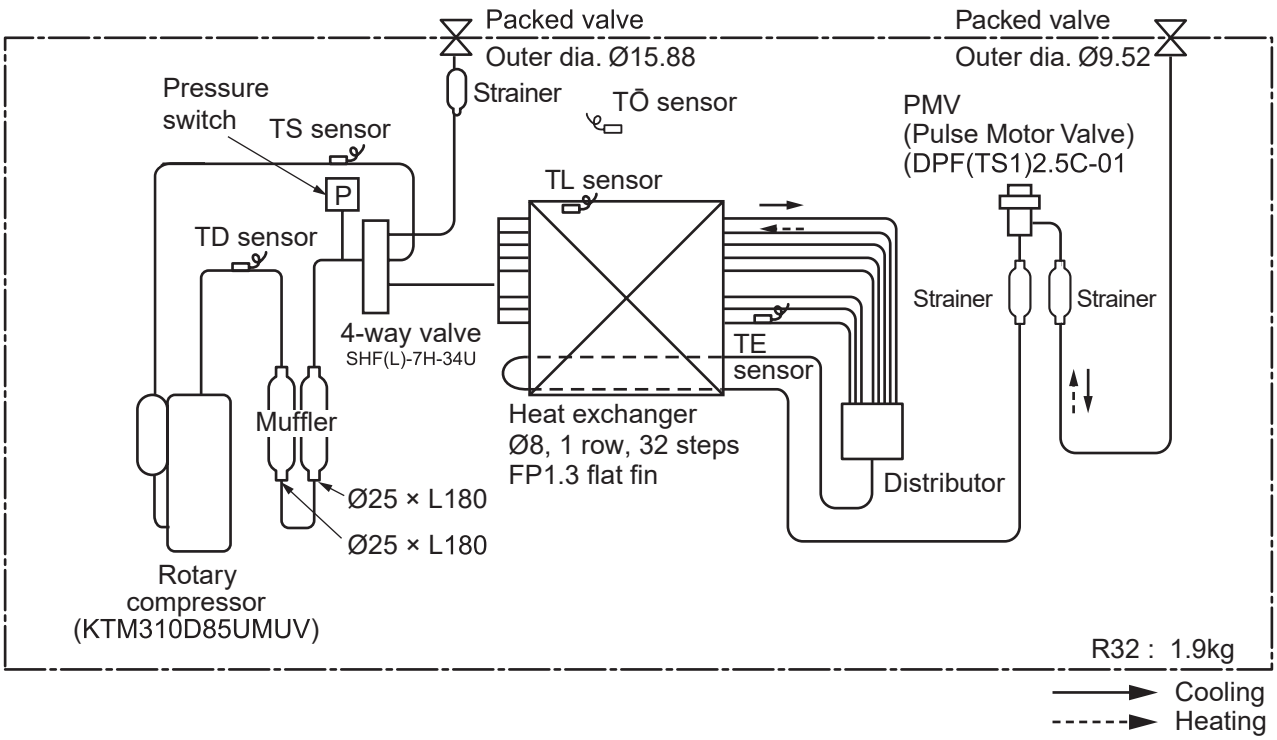

		Pressure				Pipe surface temperature (°C)				* Comp. Hz	Fan	Temp	
		(MPa)		(kg/cm²G)									
		Pd	Ps	Pd	Ps	(TD)	(TS)	(TC)	(TE)			In	Out
Cooling	Standard	3.50	0.90	35.6	9.2	92	8	11	44	75	HIGH	27/19	35/-
	Overload	3.69	1.40	36.7	11.5	76	23	21	56	37	HIGH	32/24	46/-
	Low load	1.78	0.73	20.7	8.4	52	4	1	4	42	LOW	18/15.5	-15/-
Heating	Standard	2.57	0.65	26.2	6.6	58	-1	41	0	73	HIGH	20/-	7/6
	Overload	3.35	0.77	31.9	11.4	87	6	52	8	75	LOW	29/27	24/18
	Low load	1.51	0.23	21.9	2.4	86	-23	22	-20	92	HIGH	15/0	-15/-

* 6 poles are provided to this compressor.
The compressor frequency (Hz) measured with a clamp meter is 2 times of revolutions (rps) of the compressor.

RAV-GV1601ATP-E1 / TR

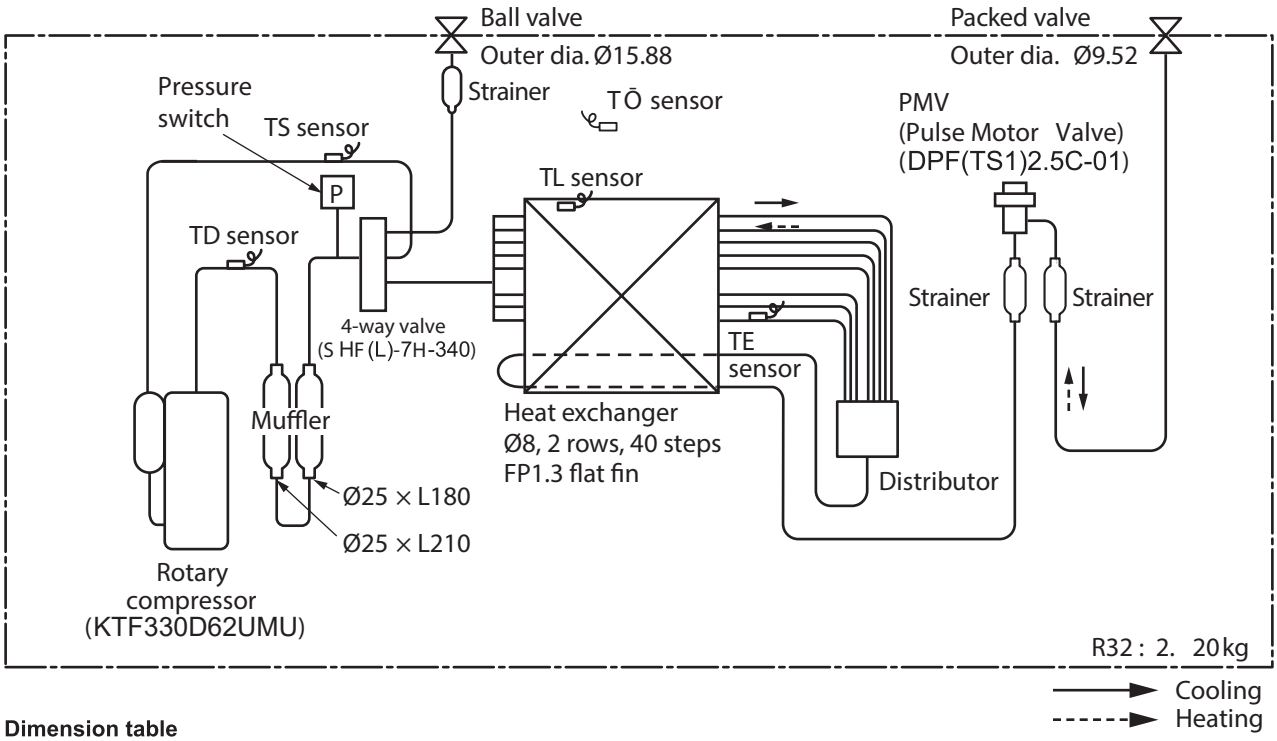

Dimension table

Indoor unit	Outer diameter of refrigerant pipe	
	Gas side ØA	Liquid side ØB
HM1601 type	15.9	9.5

		Pressure				Pipe surface temperature (℃)				Comp Hz	Fan	Temp	
		(MPa)		(kg/cm²G)									
		Pd	Ps	Pd	Ps	(TD)	(TS)	(TC)	(TE)			In	Out
Cooling	Standard	3.39	0.86	34.50	8.70	97.00	8.36	10.00	42.15	73.8	High	27/19	35/24
	Overload	3.67	1.10	37.40	11.20	81.60	18.00	17.00	57.10	52.7	High	32/23	46/28
	Low load	2.63	0.76	26.80	7.70	67.00	6.82	4.00	4.40	33	Low	18/13	-15/-17
Heating	Standard	2.65	0.65	27.00	6.60	75.00	0.76	41.00	0.67	69.6	High	20/15	7/6
	Overload	3.20	1.00	32.60	10.10	85.10	12.15	52.00	12.50	40.2	Low	27/-	24/18
	Low load	1.57	0.34	16.00	3.42	87.10	-20.50	23.00	-18.90	82.8	High	0/-	-15/-17

＊4 poles are provided to this compressor.
The compressor frequency (Hz) measured with a clamp meter is 2 times of revolutions (rps) of the compressor.

3-5. Sound Characteristic

RAV-GV561ATP-E / TR

Sound pressure level (dBA)	Cooling
	46

Cooling

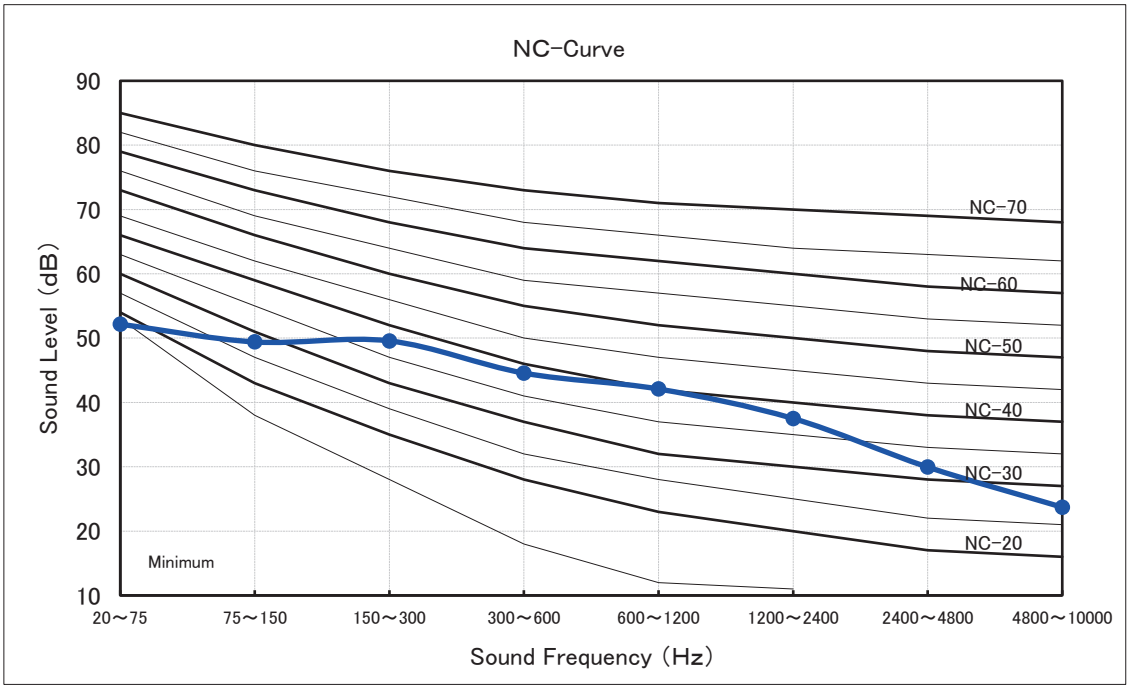

Sound pressure level (dBA)	Heating
	48

Heating

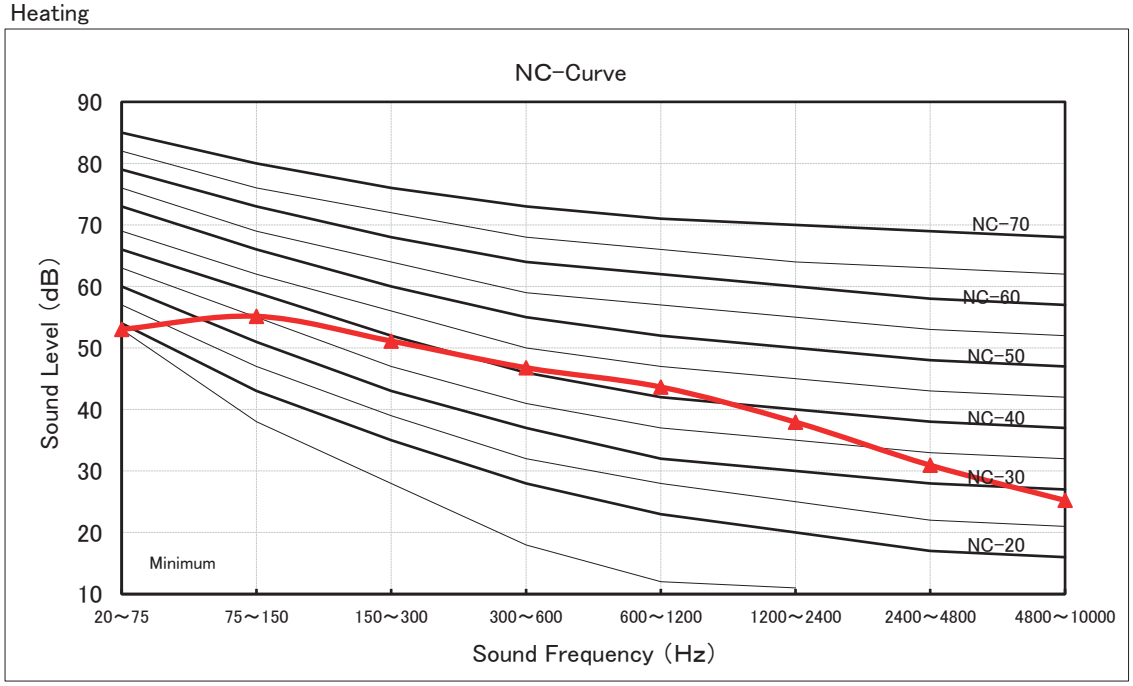

RAV-GV801ATP-E / TR

Sound pressure level (dBA)	Cooling
	48

Cooling

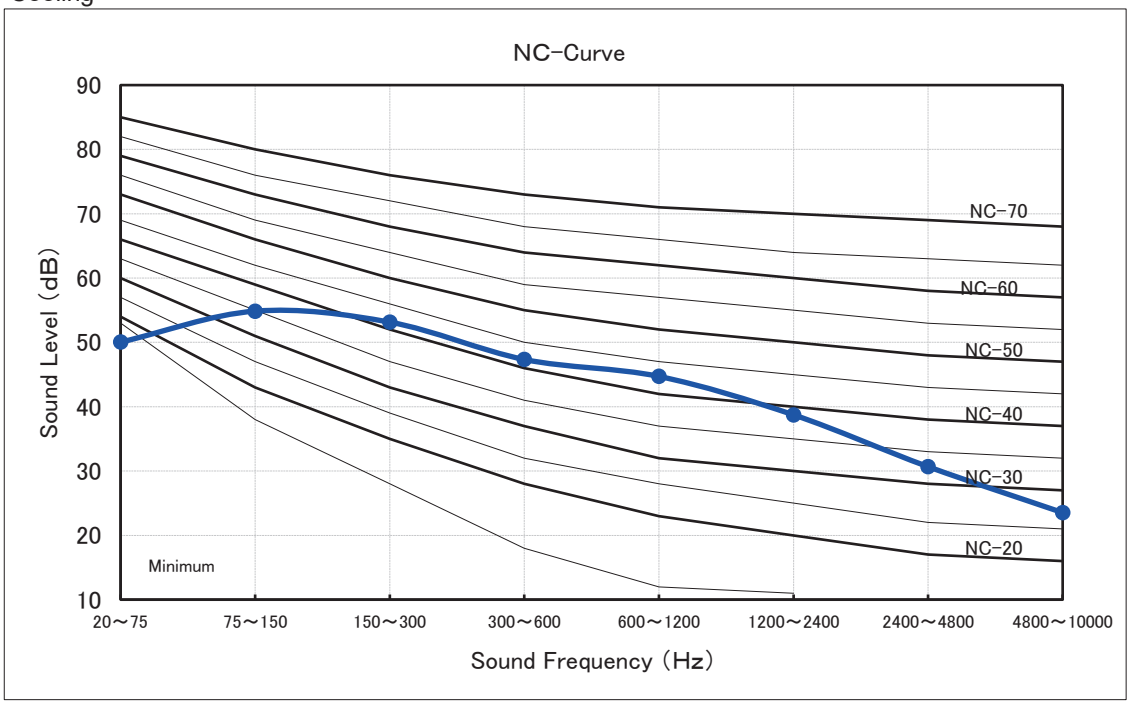

Sound pressure level (dBA)	Heating
	52

Heating

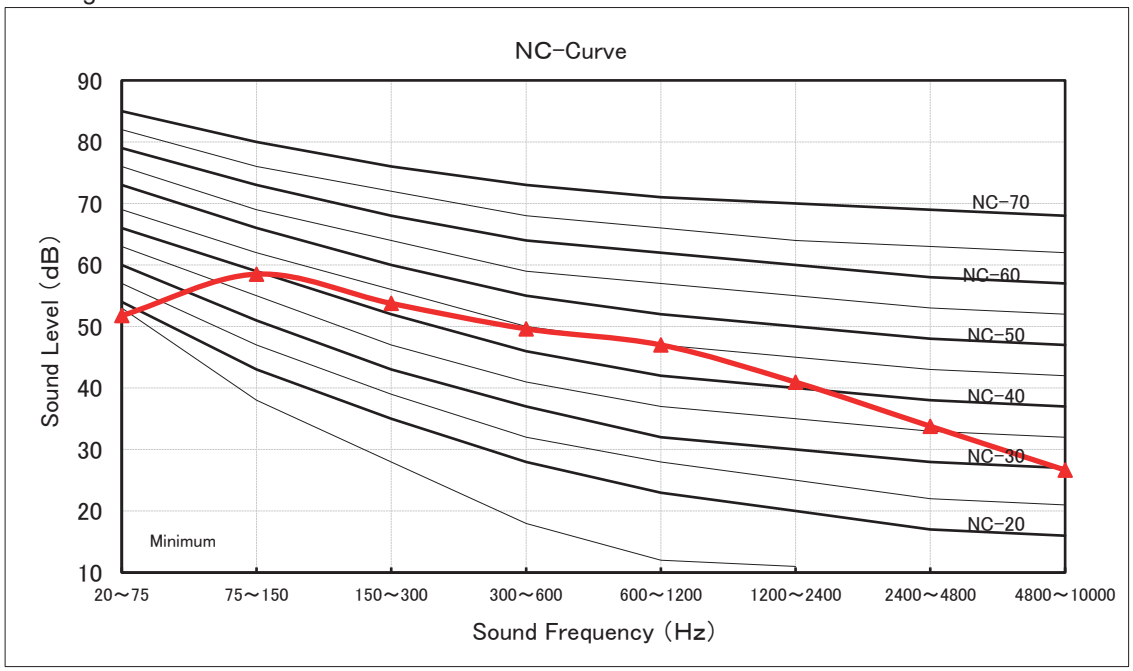

RAV-GV1101ATP-E / TR

Sound pressure level (dBA)	Cooling
	51

Cooling

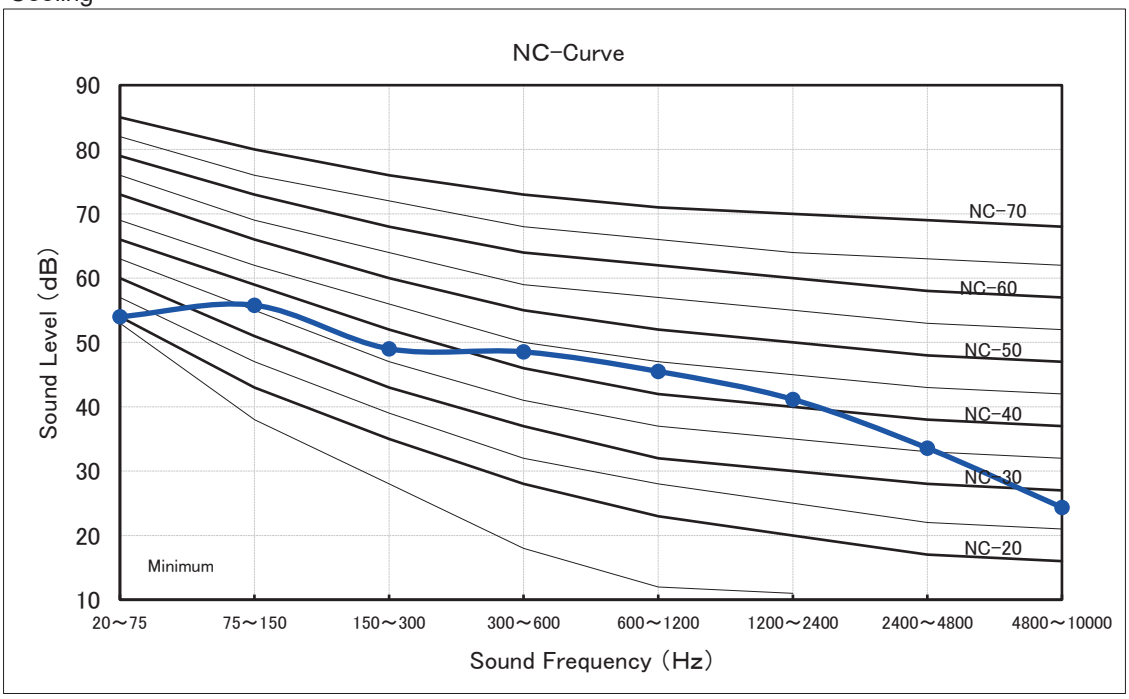

Sound pressure level (dBA)	Heating
	53

Heating

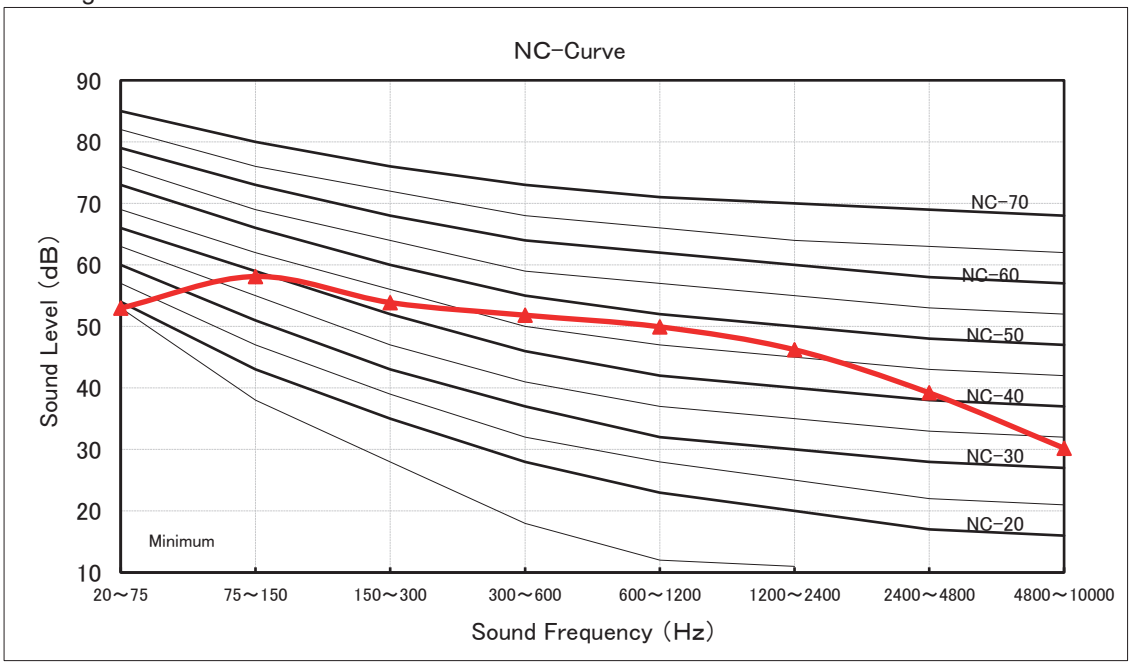

RAV-GV1401ATP-E / TR

Sound pressure level (dBA)	Cooling
	53

Cooling

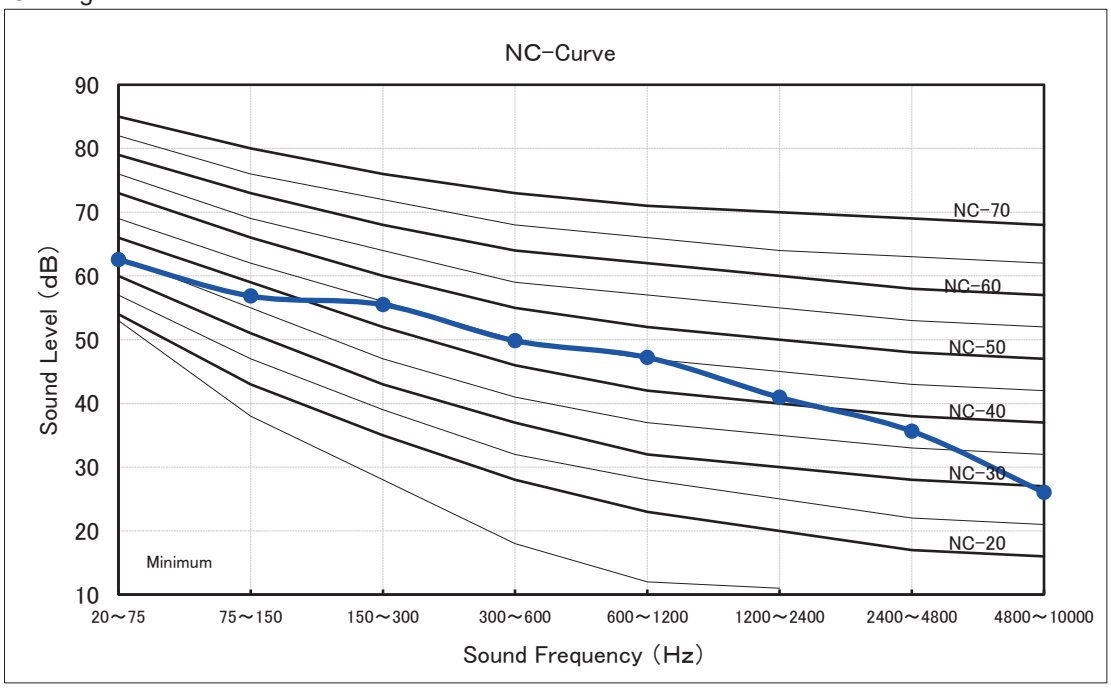

Sound pressure level (dBA)	Heating
	60

Heating

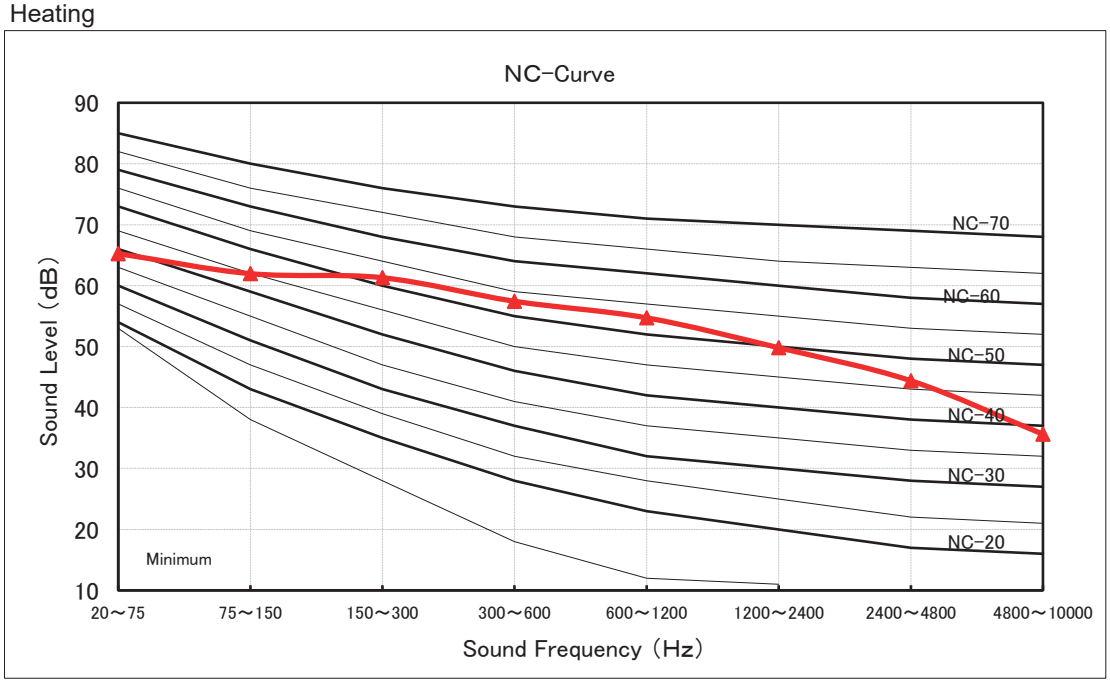

RAV-GV1601ATP-E1 / TR

Sound pressure level (dBA)	Cooling
	57

Cooling

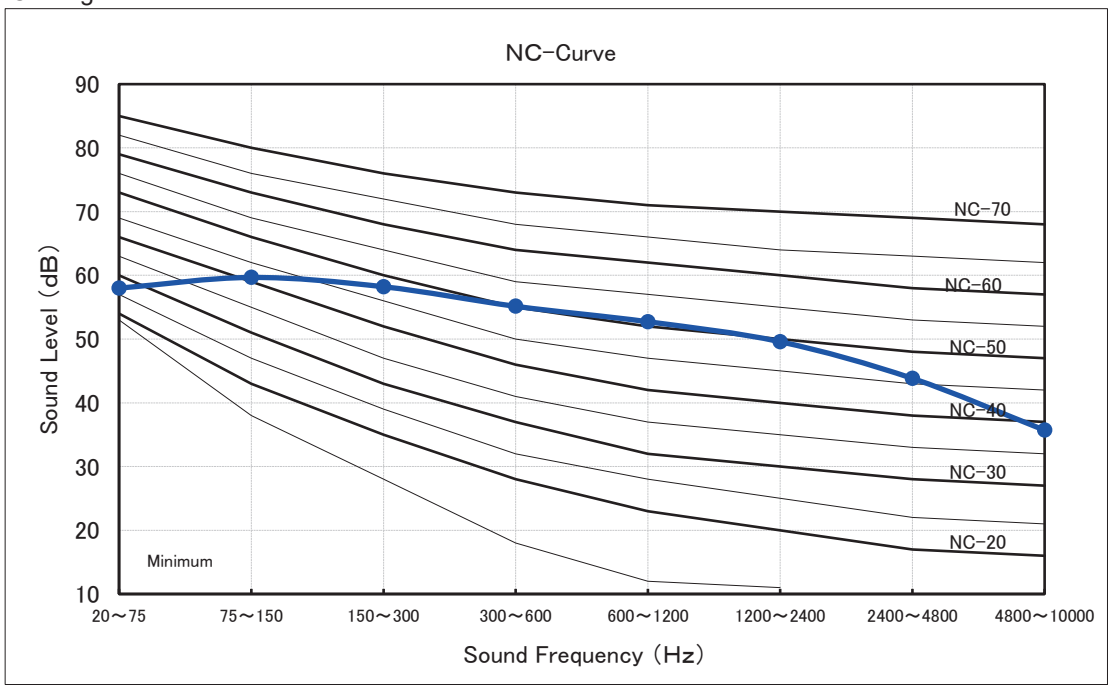

Sound pressure level (dBA)	Heating
	59

Heating

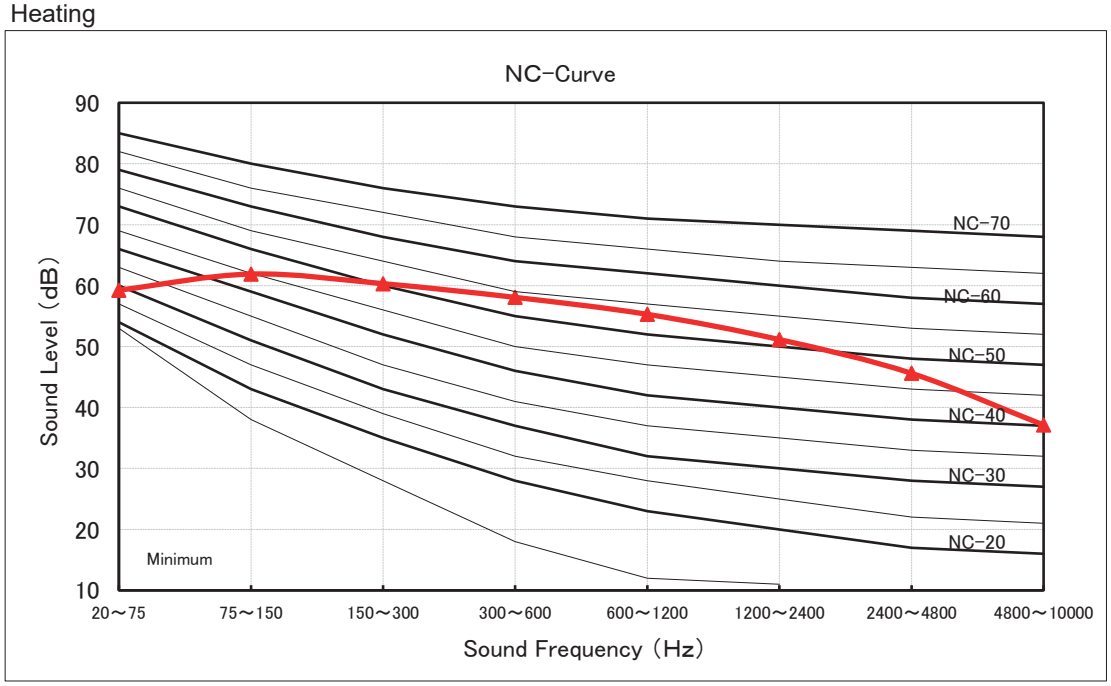

3-6. Connecting pipe length and lift difference between indoor units vs. capacity correction value

RAV-GV561ATP-E / TR

[Cooling]

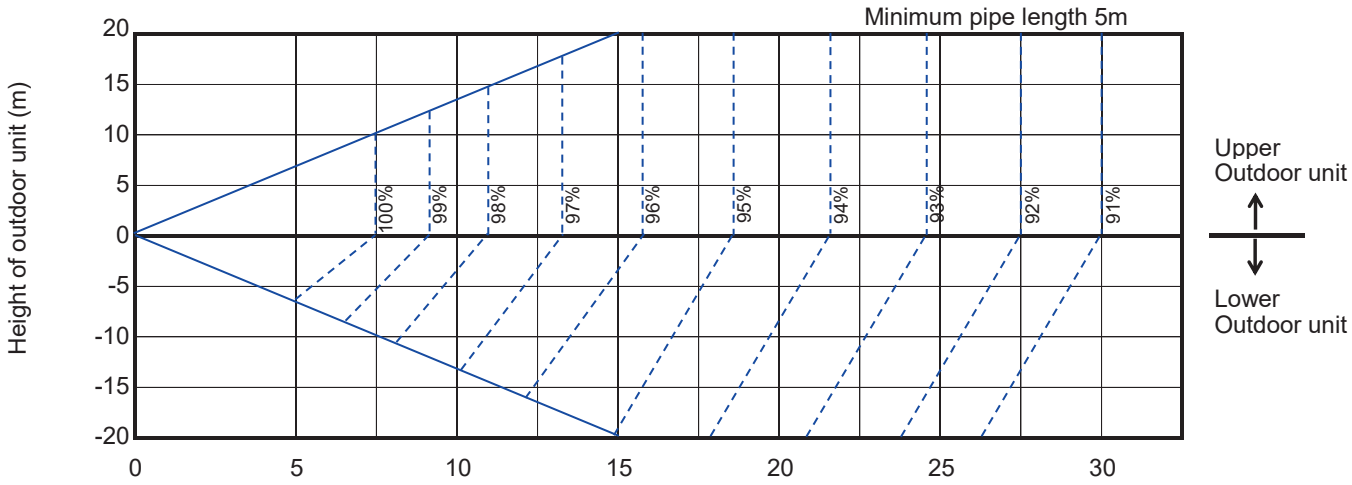

[Heating]

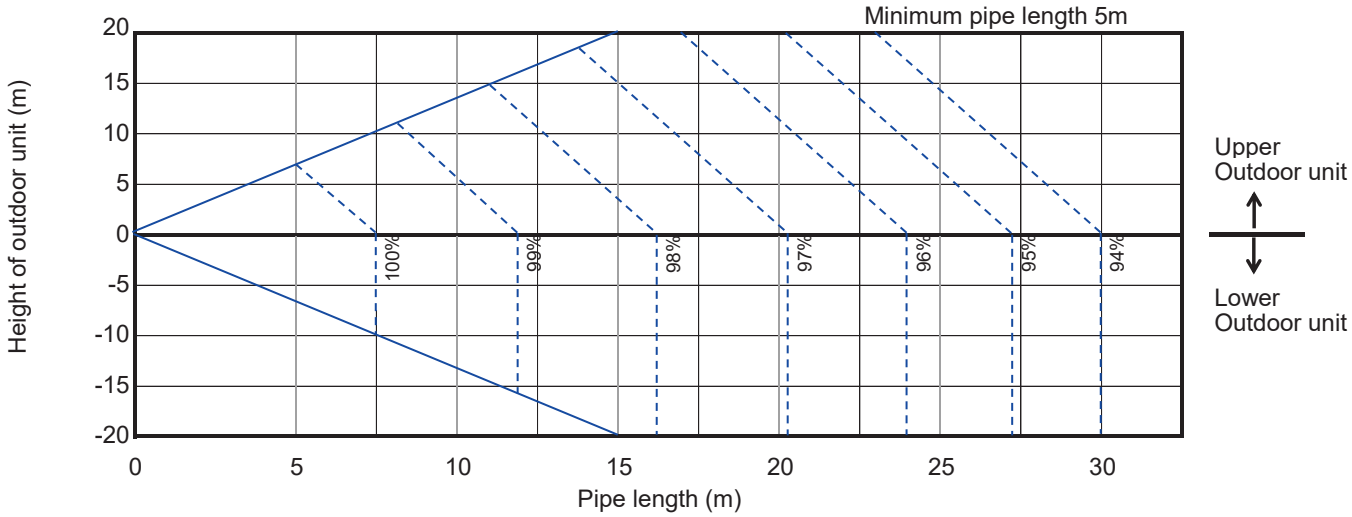

RAV-GV801ATP-E / TR

[Cooling]

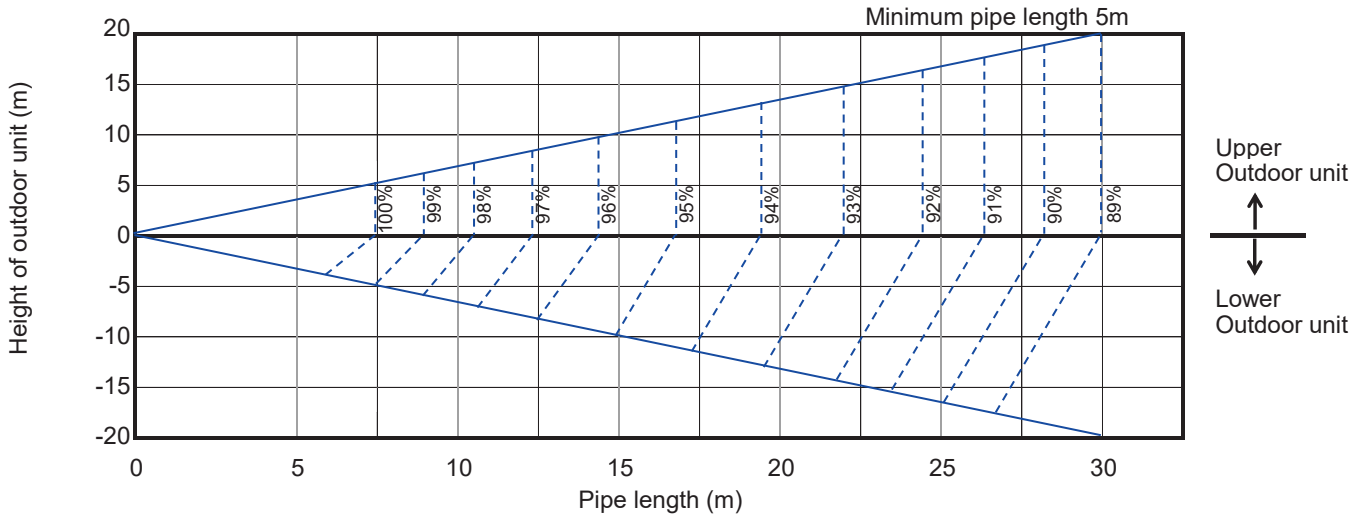

[Heating]

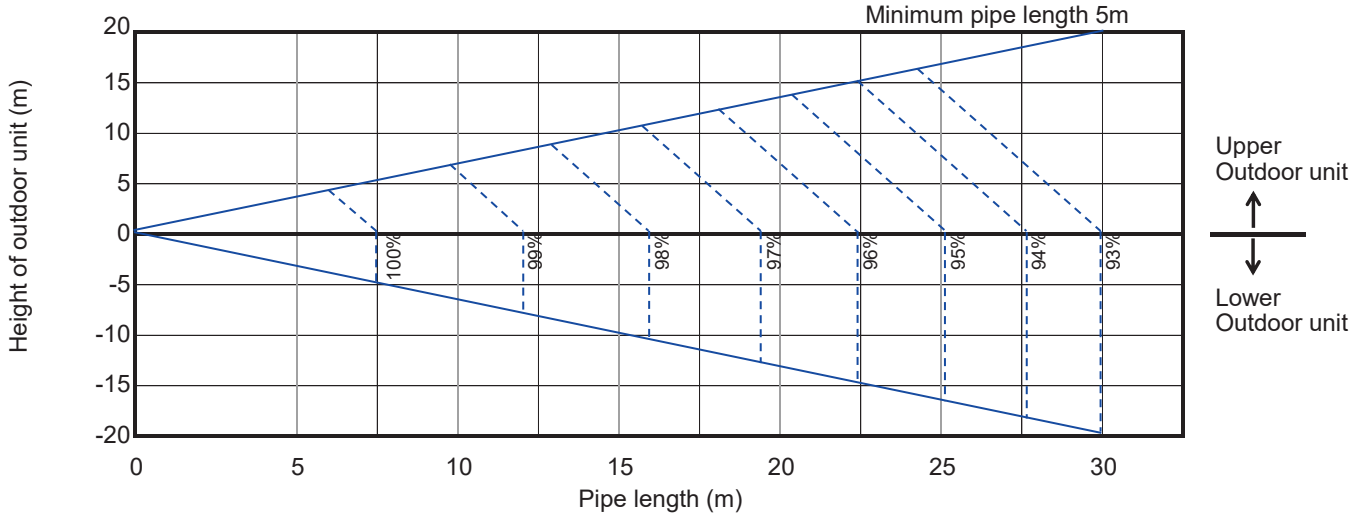

RAV-GV1101ATP-E / TR

[Cooling]

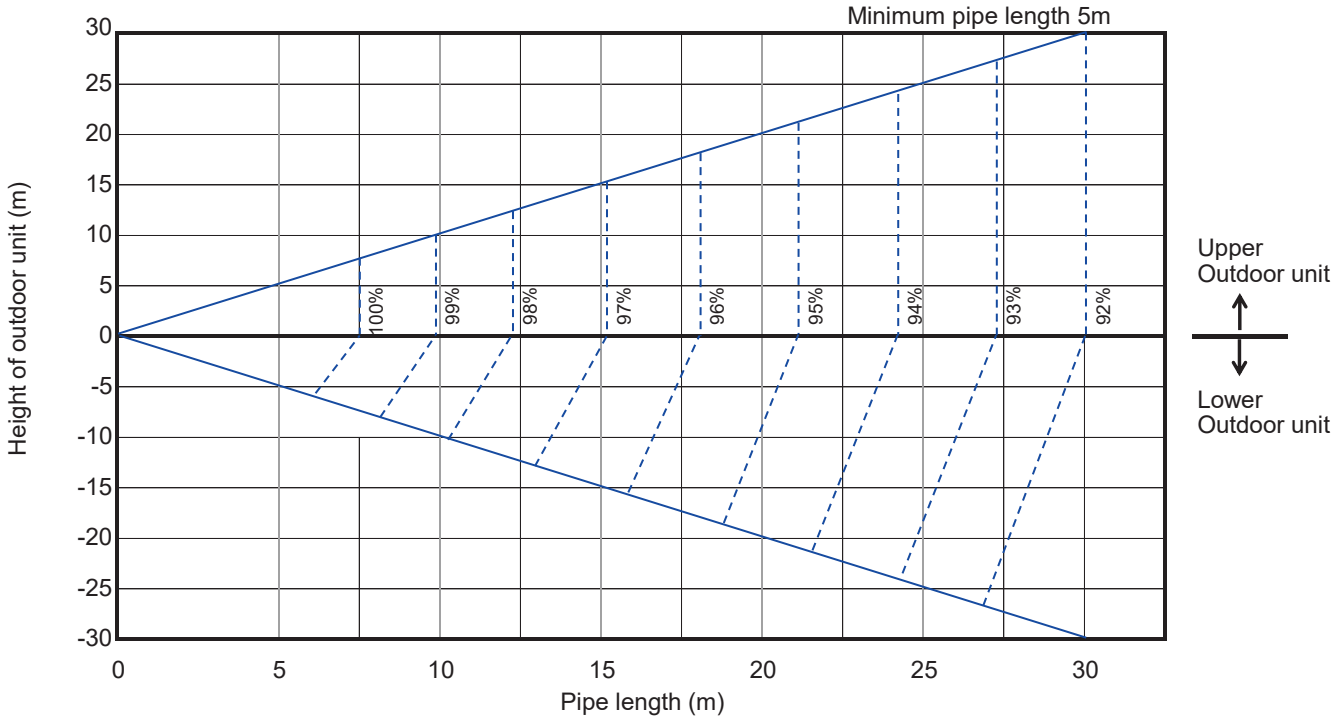

[Heating]

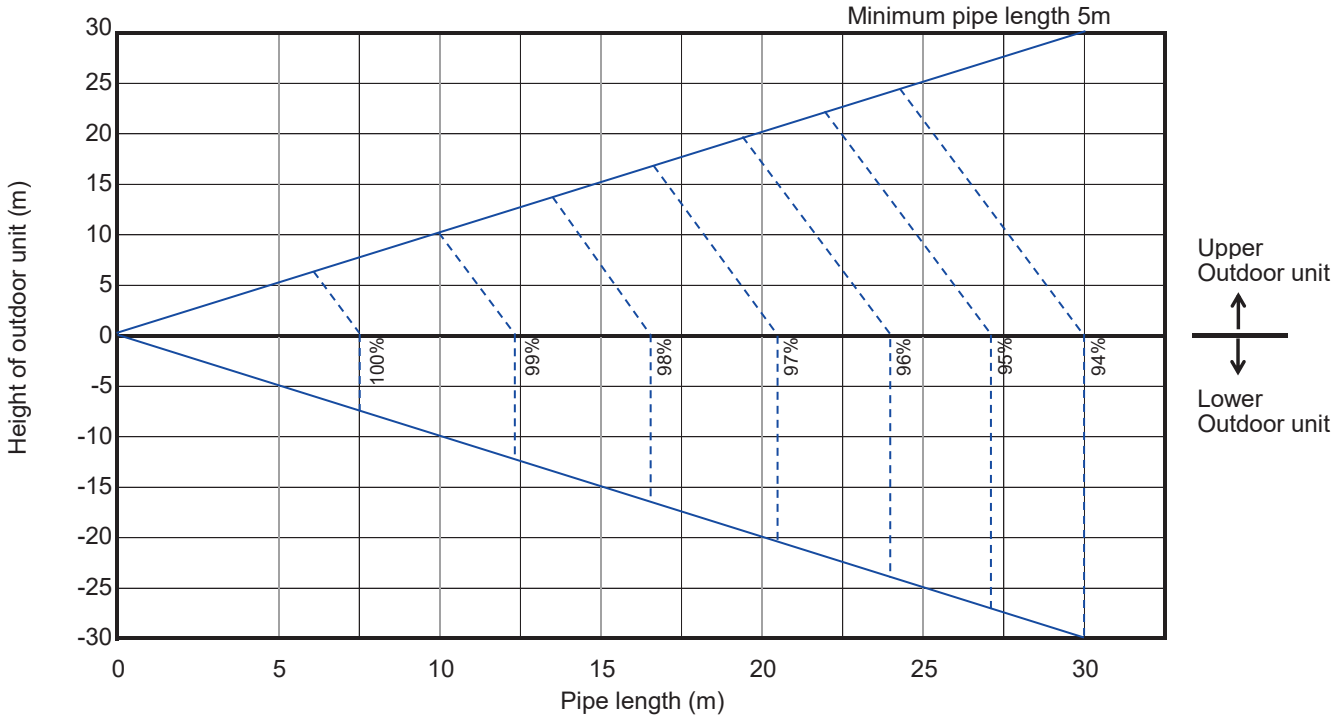

RAV-GV1401ATP-E / TR

[Cooling]

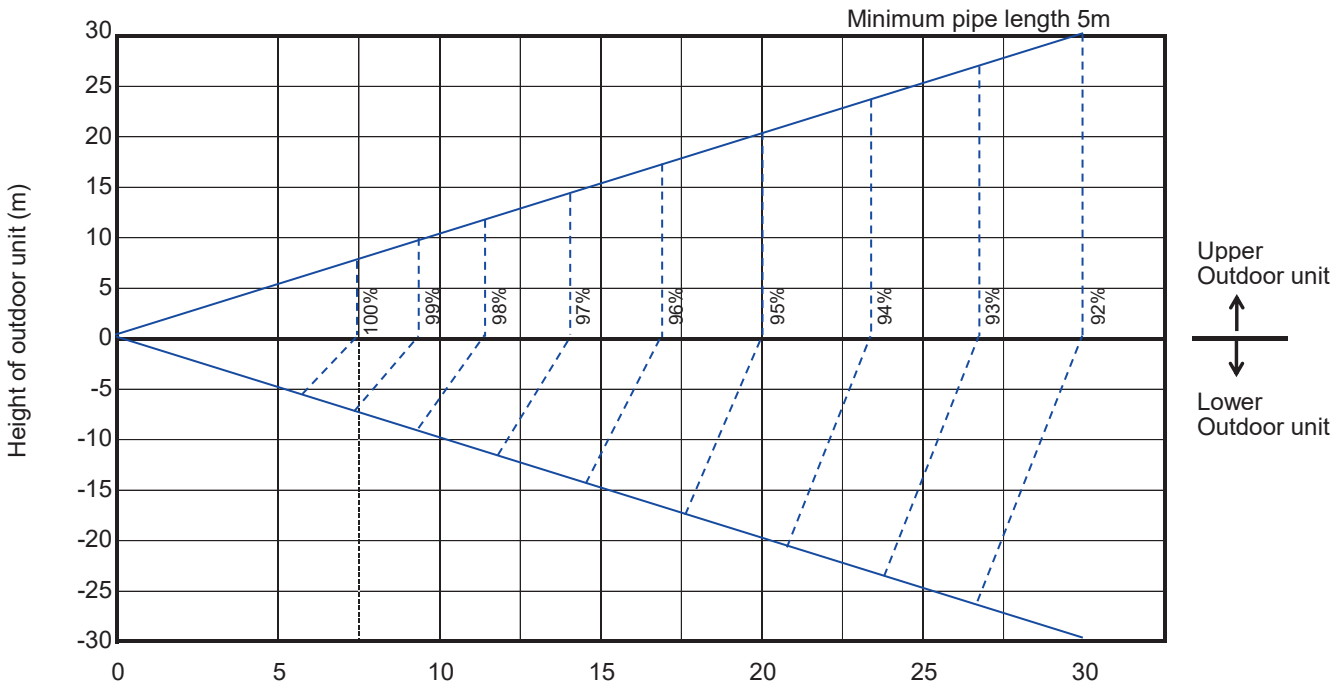

[Heating]

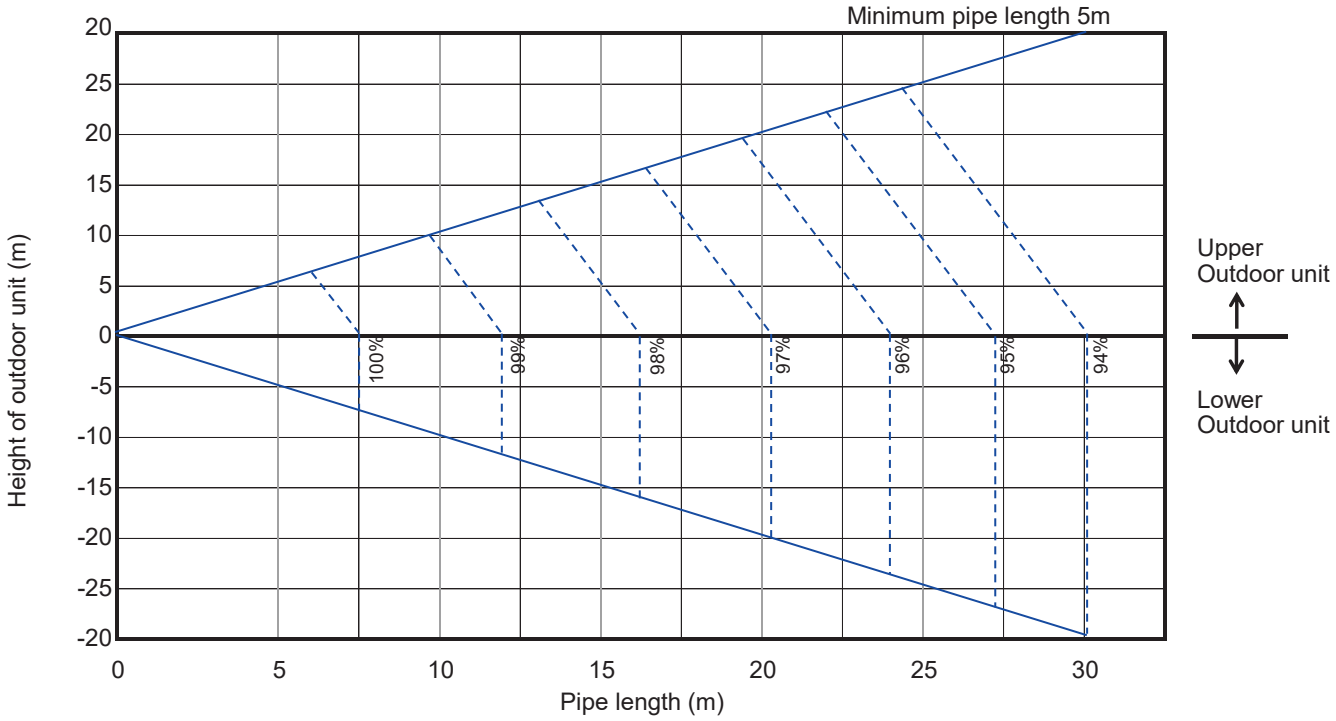

RAV-GV1601ATP-E1 / TR

[Cooling]

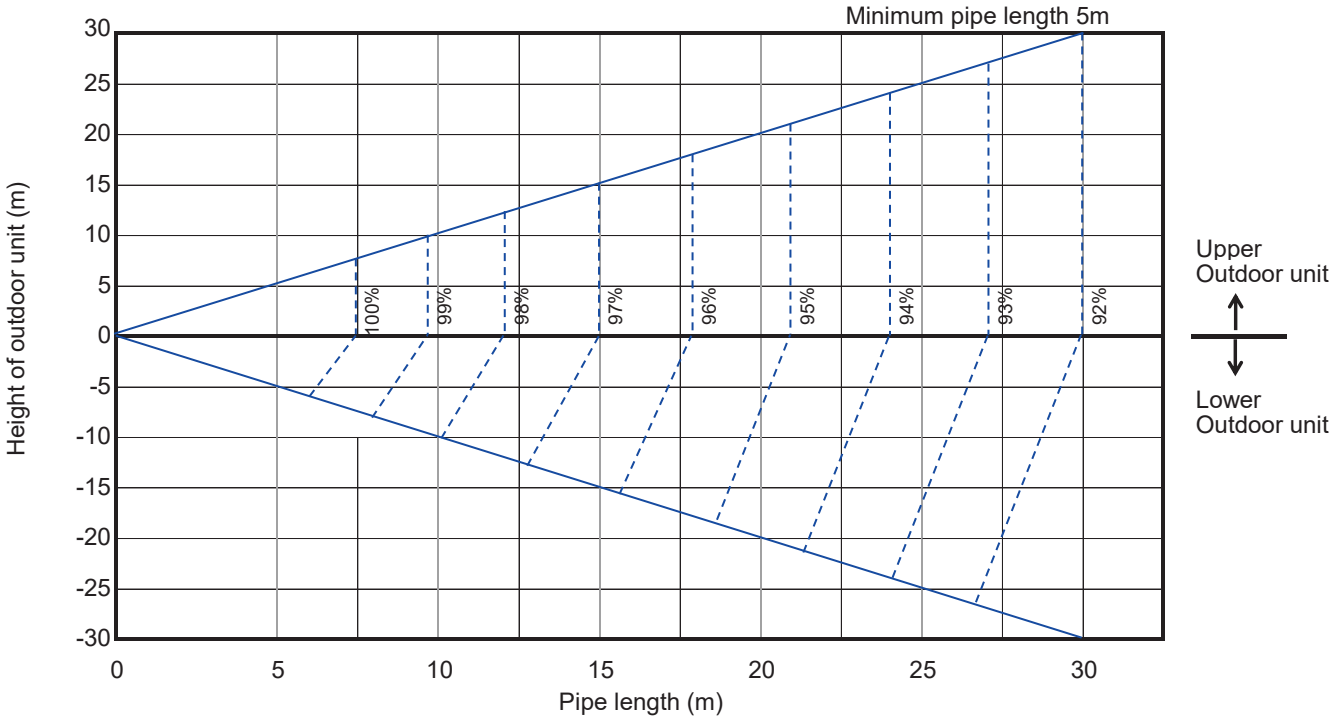

[Heating]

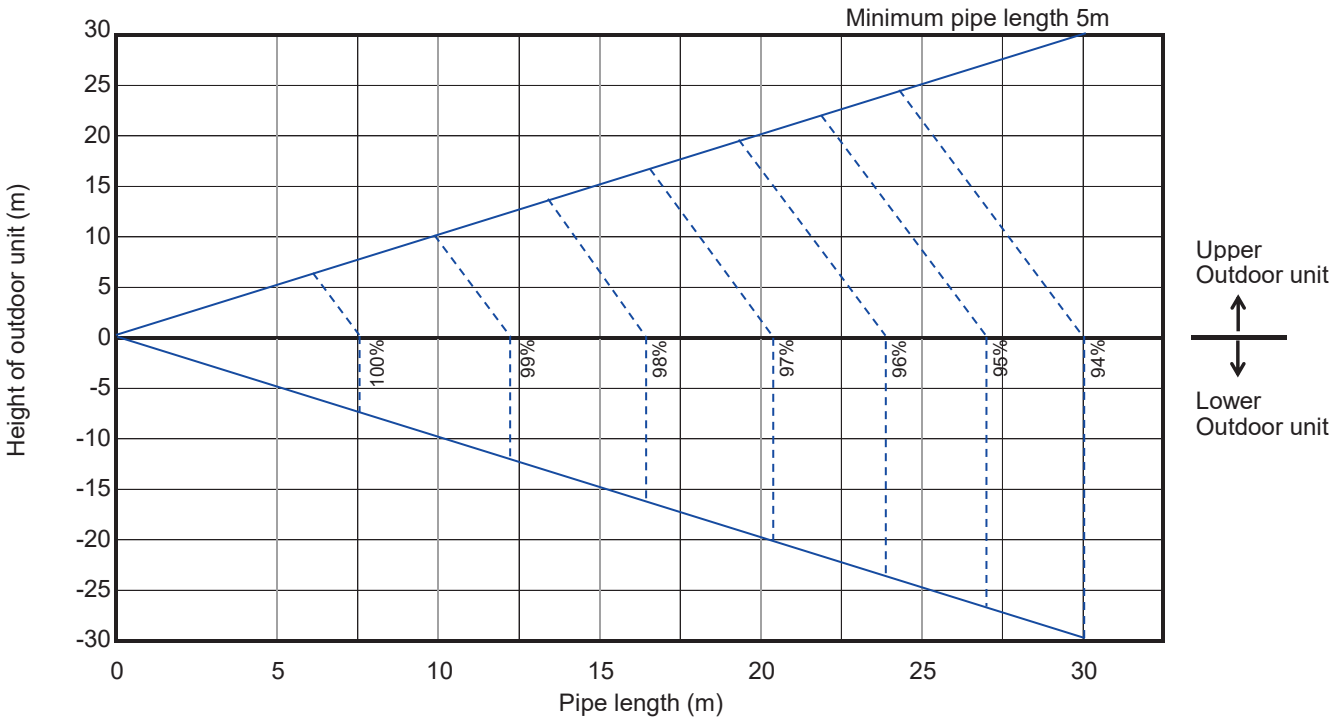

CARRIER AIR CONDITIONING (THAILAND) CO.,LTD.

144/9 Moo 5, Bangkadi Industrial Park, Tivanon Road, Tambol Bangkadi,
Amphur Muang, Pathumthani 12000, Thailand

Notice : Carrier is committed to continuously improving its products to ensure the highest quality and reliability standard, and to meet local regulations and market requirements. All features and specifications are subject to change without prior notice.

Revision 04 : 240930