TOSHIBA

TCTC-E18-LC004-5

Engineering Data Book

Digital Inverter R32

1 Phase Model

Outdoor units

RAV-GM301ATP-E / TR
RAV-GM401ATP-E / TR
RAV-GM561ATP-E1 / TR1
RAV-GM801ATP-E / TR
RAV-GM1101ATP-E / TR
RAV-GM1401ATP-E / TR

RAV-GM301ATJP-E
RAV-GM401ATJP-E
RAV-GM561ATJP-E1
RAV-GM801ATJP-E
RAV-GM1101ATJP-E
RAV-GM1401ATJP-E

Indoor units

4-way casette type
RAV-HM561UTP-E / TR
RAV-HM801UTP-E / TR
RAV-HM1101UTP-E / TR
RAV-HM1401UTP-E / TR

Compact 4-way casette type
RAV-HM301MUTP-E
RAV-HM401MUTP-E
RAV-HM561MUTP-E / TR

Standard Duct type
RAV-HM561BTP-E / TR
RAV-HM801BTP-E / TR
RAV-HM1101BTP-E / TR
RAV-HM1401BTP-E / TR

Slim Duct type
RAV-HM301SDT-E / TR
RAV-HM401SDT-E / TR
RAV-HM561SDT-E / TR

Under Ceiling type
RAV-HM401CTP-E / TR
RAV-HM561CTP-E / TR
RAV-HM801CTP-E / TR
RAV-HM1101CTP-E / TR
RAV-HM1401CTP-E / TR

High Wall type
RAV-HM301KRTP-E / TR
RAV-HM401KRTP-E / TR
RAV-HM561KRTP-E / TR
RAV-HM801KRTP-E / TR
RAV-HM1101KRTP-E / TR

RAV-HM561KRSP-E / TR
RAV-HM801KRSP-E / TR

Contents

1. Line up

1-1. Single Line-up

Outdoor unit line-up

Model name	RAV-GM301AT(J)P-E RAV-GM401AT(J)P-E RAV-GM561AT(J)P-E1 RAV-GM801AT(J)P-E RAV-GM1101AT(J)P-E RAV-GM1401AT(J)P-E	RAV-GM301ATP-TR RAV-GM401ATP-TR RAV-GM561ATP-TR1 RAV-GM801ATP-TR RAV-GM1101ATP-TR RAV-GM1401ATP-TR
Appearance	 1, 1.5, 2 and 3 HP	 4 and 5 HP

Indoor unit line-up

Capacity Type			30	40	56	80	110	140
(HP equivalent)			1.0	1.5	2.0	3.0	4.0	5.0
4-way Cassette		RAV-HM**1UTP-E/TR	-	-	56	80	110	140
Compact 4-way Cassette		RAV-HM**1MUTP-E/TR	30	40	56	-	-	-
Standard Duct		RAV-HM**1BTP-E/TR	-	-	56	80	110	140
Slim Duct		RAV-HM**1SDT-E/TR	30	40	56	-	-	-
Under Celling		RAV-HM**1CTP-E/TR	-	40	56	80	110	140
High Wall		RAV-HM**1KRTP-E/TR	30	40	56	80	110	-

Indoor unit line-up

Capacity Type			30	40	56	80	110	140
(HP equivalent)			1.0	1.5	2.0	3.0	4.0	5.0
High Wall		RAV-HM**1KRSP-E/TR	-	-	56	80	-	-

1-2. Twin Line-up

Outdoor unit line-up (Twin system)

Model name	RAV-GM1101ATP-E RAV-GM1401ATP-E	RAV-GM1101ATJP-E RAV-GM1401ATJP-E	RAV-GM1101ATP-TR RAV-GM1401ATP-TR
Appearance	 4 and 5 HP		

Indoor unit line-up (Twin System)

Indoor Unit	Model name	Unit	HP equivalent	Capacity Type		Outdoor unit
				56	80	
4-way Cassette	RAV-HM561UTP-E/TR	2	2.0	56	-	RAV-GM1101ATP-E/TP
Compact 4-way Cassette	RAV-HM561MUTP-E/TR	2	2.0	56	-	
Standard Duct	RAV-HM561BTP-E/TR	2	2.0	56	-	
Slim Duct	RAV-HM561SDT-E/TR	2	2.0	56	-	
Under Celling	RAV-HM561CTP-E/TR	2	2.0	56	-	
High Wall	RAV-HM561KRTP-E/TR	2	2.0	56	-	
4-way Cassette	RAV-HM801UTP-E/TR	2	3.0	-	80	RAV-GM1401ATP-E/TP
Standard Duct	RAV-HM801BTP-E/TR	2	3.0	-	80	
Under Celling	RAV-HM801CTP-E/TR	2	3.0	-	80	
High Wall	RAV-HM801KRTP-E/TR	2	3.0	-	80	

2. Indoor Units

2-1. 4-way Cassette Type

2-1-1. Specifications

4-way Cassette Type <Single Type>

Model		Indoor unit		RAV-HM561UTP-E/TR	RAV-HM801UTP-E/TR	RAV-HM1101UTP-E/TR	RAV-HM1401UTP-E/TR
		Outdoor unit (RAV-GM***ATJP-E)		RAV-GM561ATP-E1/TR1	RAV-GM801ATP-E/TR	RAV-GM1101ATP-E/TR	RAV-GM1401ATP-E/TR
Cooling capacity				5.0 < 1.5 - 5.6 >	6.7 < 1.5 - 8.0 >	9.5 < 3.0 - 11.2 >	12.0 < 3.0 - 13.2 >
Heating capacity			(kW)	5.3 < 1.5 - 6.3 >	7.7 < 1.5 - 9.0 >	11.2 < 3.0 - 13.0 >	13.0 < 3.0 - 16.0 >
Power supply				1 phase 220V-240V/50Hz, 1phase 220V/60Hz			
Electrical characteristics	Cooling	Running current	(A)	7.31 - 6.70	10.4 - 9.54	13.95-12.75	20.75-19.00
		Power consumption	(kW)	1.56	2.22	2.87	3.57
		Power factor	(%)	97	97	94	94
		EER		3.21	3.02	3.31	2.80
		SEER		6.34	5.81	6.15	5.71
	Heating	Running current	(A)	6.37 - 5.84	9.98 - 9.15	14.20-13.00	16.65-15.30
		Power consumption	(kW)	1.36	2.13	2.93	3.46
		Power factor	(%)	97	97	94	94
		COP		3.90	3.62	3.82	3.76
		SCOP		4.60	4.42	4.28	4.29
	Maximum current		(A)	15.5	15.5	22.8	22.8
Indoor unit							
Appearance	Main unit			Zinc hot dipping steel plate			
	Ceiling panel (Sold separately)	Model		RBC-U31PGP(W)-E , RBC-U31PGSP(W)-E			
		Panel color		W:Moon-white(2.5GY 9.0/0.5)			
Outer dimension	Main unit	Height	(mm)	256		319	
		Width	(mm)	840			
		Depth	(mm)	840			
	Ceiling panel (Sold separately)	Height	(mm)	30			
		Width	(mm)	950			
		Depth	(mm)	950			
Total weight	Main unit		(kg)	20.0		24.0	
	Ceiling panel (Sold separately)		(kg)	4.2			
Fan unit	Fan			Turbo fan			
	Standard air flow	H/M/L	(m³/h)	1050 / 870 / 780	1230 / 960 / 810	2010 / 1440 / 1170	2100 / 1440 / 1230
	Motor		(W)	14	20	68	72
Air filter				Standard filter (Long life filter)			
Sound pressure level		H/M/L	(dB)	32 / 29 / 28	35 / 31 / 28	43 / 38 / 33	44 / 38 / 34
Sound power level		H/M/L	(dB)	47 / 44 / 43	50 / 46 / 43	58 / 53 / 48	59 / 53 / 49
Connecting pipe	Drain port			VP25			
Outdoor unit							
Air Flow			(m3/h)	2,400	2,700	4,080	4,200
Outer dimension	Height		(mm)	550		890	
	Width		(mm)	780		900	
	Depth		(mm)	290		320	
Total weight	Main unit		(kg)	40	44	68	
Pipe	Min. length		(m)	5.0			
	Max. total length		(m)	30.0		50.0	
Flare Connections	Gas side		(mm)	12.7	15.9		
	Liquid side		(mm)	6.4	9.5		
Sound pressure level	Cooling/Heating		(dB)	46 / 48	48 / 52	54 / 57	55 / 57
Sound power level	Cooling/Heating		(dB)	63 / 65	65 / 69	70 / 74	70 / 74
Operating Range	Cooling		(°C)	-15 / 46			
	Heating		(°C)	-15 / 15			

*1 : The cooling capacities and electrical characteristics are measured under the conditions specified by JIS B 8615 based on the reference piping. The reference piping consists of 5 m of main piping and 2.5 m of branch piping connected with 0 meter height.

*2 : The sound level are measured in an anechoic chamber in accordance with JIS B 8616. Normally, the values measured in the actual operating environment become larger than the indicated values due to the effects of external sound.

Note :

Rated conditions Cooling : Indoor air temperature 27°C DB/19°C WB, Outdoor air temperature 35°C DB
Heating : Indoor air temperature 20°C DB, Outdoor air temperature 7°C DB/6°C WB

4-way Cassette (Twin System)

Model		**Indoor unit 1**		**RAV-HM561UTP-E/TR**	**RAV-HM801UTP-E/TR**
		Indoor unit 2		**RAV-HM561UTP-E/TR**	**RAV-HM801UTP-E/TR**
		Outdoor unit	(RAV-GM***ATJP-E)	**RAV-GM1101ATP-E/TR**	**RAV-GM1401ATP-E/TR**
Cooling capacity			(kW)	9.5 < 3.0 - 11.2 >	12.0 < 3.0 - 13.2 >
Heating capacity			(kW)	11.2 < 3.0 - 13.0 >	13.0 < 3.0 - 16.0 >
Power supply				1 phase 220V-240V/50Hz, 1phase 220V/60Hz	
Electrical characteristics	Cooling	Running current	(A)	13.95-12.73	20.74 - 19.02
		Power consumption	(kW)	2.87	4.29
		Power factor	(%)	94	94
		EER		3.31	2.80
		SEER		5.94	5.57
	Heating	Running current	(A)	14.20-13.00	16.70-15.30
		Power consumption	(kW)	2.93	3.46
		Power factor	(%)	94	94
		COP		3.82	3.76
		SCOP		4.28	4.29
	Maximum current		(A)	22.8	22.8
Indoor unit					
Appearance		Main unit		Zinc hot dipping steel plate	
		Ceiling panel (Sold separately)	Model	RBC-U31PGP(W)-E , RBC-U31PGSP(W)-E	
			Panel color	W:Moon-white(2.5GY 9.0/0.5)	
Outer dimension		Main unit	Height (mm)	256	
			Width (mm)	840	
			Depth (mm)	840	
		Ceiling panel (Sold separately)	Height (mm)	30	
			Width (mm)	950	
			Depth (mm)	950	
Total weight		Main unit	(kg)	20	
		Ceiling panel (Sold separately)	(kg)	4.2	
Fan unit		Fan		Turbo fan	
		Standard air flow	H/M/L (m3/h)	1050 / 870 / 780	1230 / 960 / 810
		Motor	(W)	14	20
Air filter				Standard filter (Long life filter)	
Sound pressure level			H/M/L (dB)	32 / 29 / 28	35 / 31 / 28
Sound power level			H/M/L (dB)	47 / 44 / 43	50 / 46 / 43
Connecting pipe		Drain port		VP25	
Outdoor unit					
Air Flow			(m3/h)	4,080	4,200
Outer dimension		Height	(mm)	890	
		Width	(mm)	900	
		Depth	(mm)	320	
Total weight		Main unit	(kg)	68	
Pipe		Min. length	(m)	5.0	
		Max. total length	(m)	50.0	
Flare Connections		Main	Gas (mm)	15.9	
			Liquid (mm)	9.5	
		Branch	Gas (mm)	12.7	
			Liquid (mm)	6.4	
Sound pressure level		Cooling/Heating	(dB)	54 / 57	55 / 57
Sound power level		Cooling/Heating	(dB)	70 / 74	70 / 74
Operating Range		Cooling	(°C)	-15 / 46	
		Heating	(°C)	-15 / 15	

*1 : The cooling capacities and electrical characteristics are measured under the conditions specified by JIS B 8615 based on the reference piping. The reference piping consists of 5 m of main piping and 2.5 m of branch piping connected with 0 meter height.

*2 : The sound level are measured in an anechoic chamber in accordance with JIS B 8616. Normally, the values measured in the actual operating environment become larger than the indicated values due to the effects of external sound.

Note :

Rated conditions Cooling : Indoor air temperature 27°C DB/19°C WB, Outdoor air temperature 35°C DB
Heating : Indoor air temperature 20°C DB, Outdoor air temperature 7°C DB/6°C WB

2-1-2. Dimension

RAV-HM561UTP-E / TR

Standard panel (RBC-U32PGP-E)

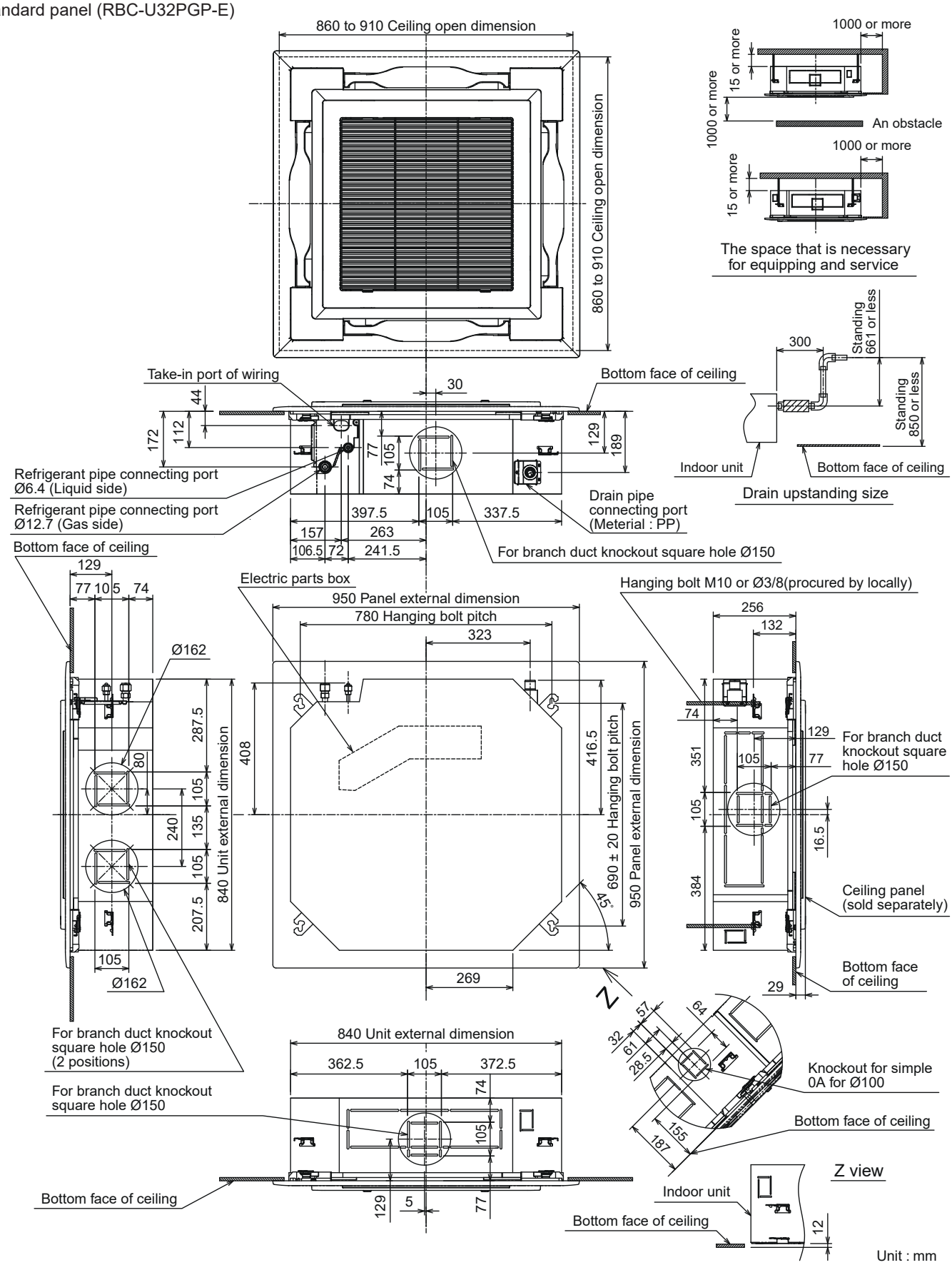

RAV-HM801UTP-E / TR

Standard panel (RBC-U32PGP-E)

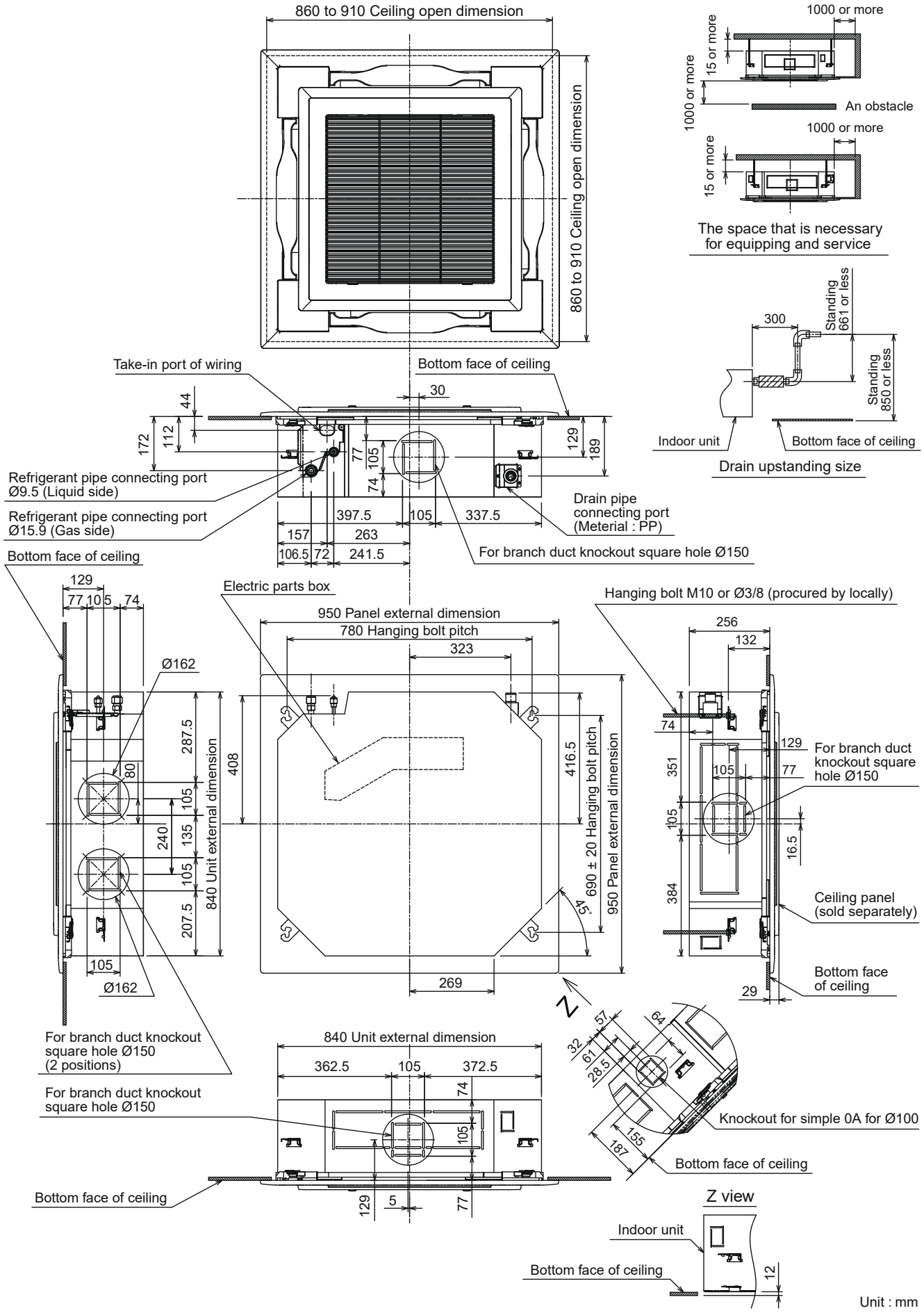

RAV-HM*__1UTP-E / TR (*110 / 140)

Standard panel (RBC-U32PGP-E)

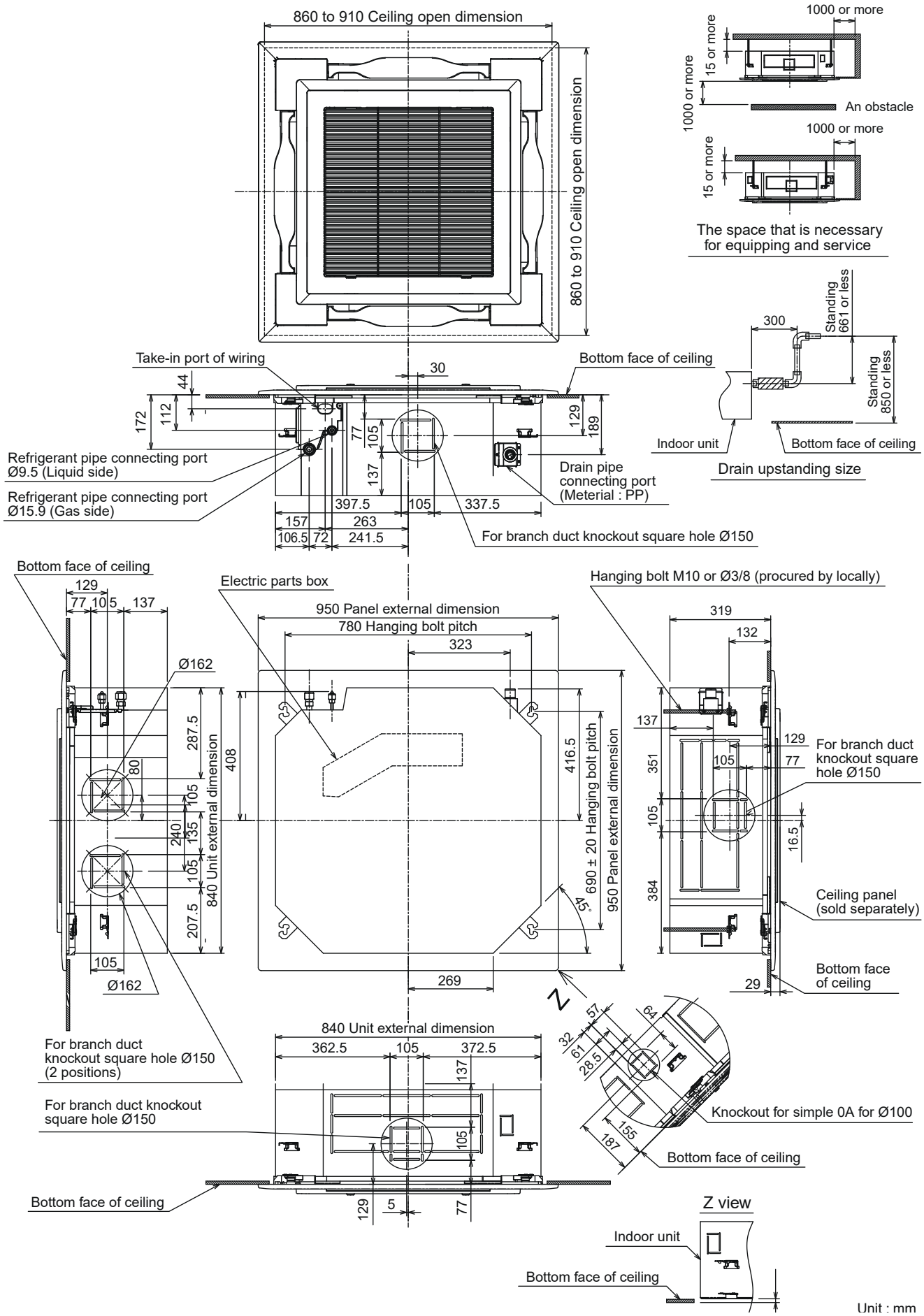

RAV-HM561UTP-E / TR

Smart design panel (RBC-U33P-E)

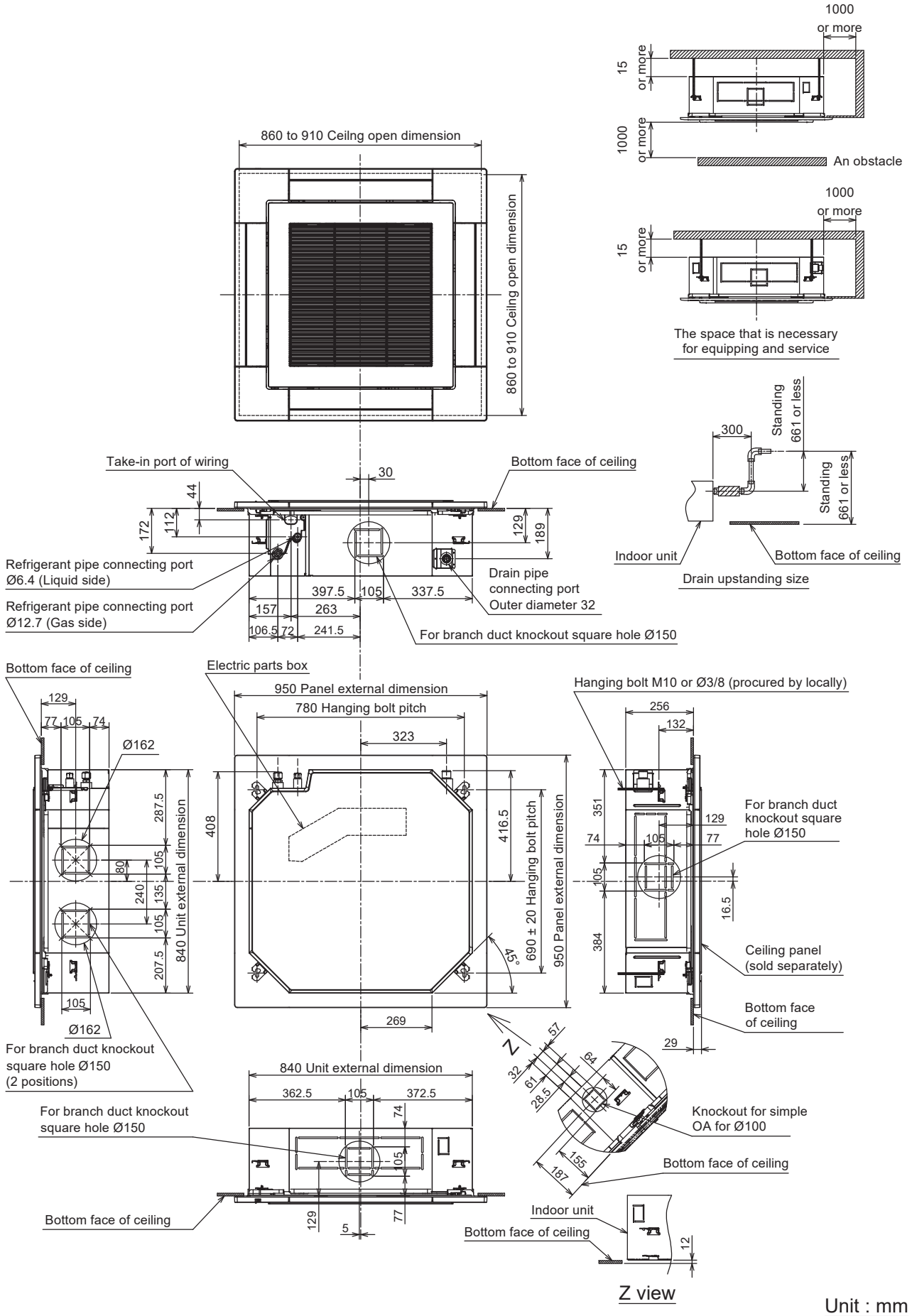

RAV-HM801UTP-E / TR

Smart design panel (RBC-U33P-E)

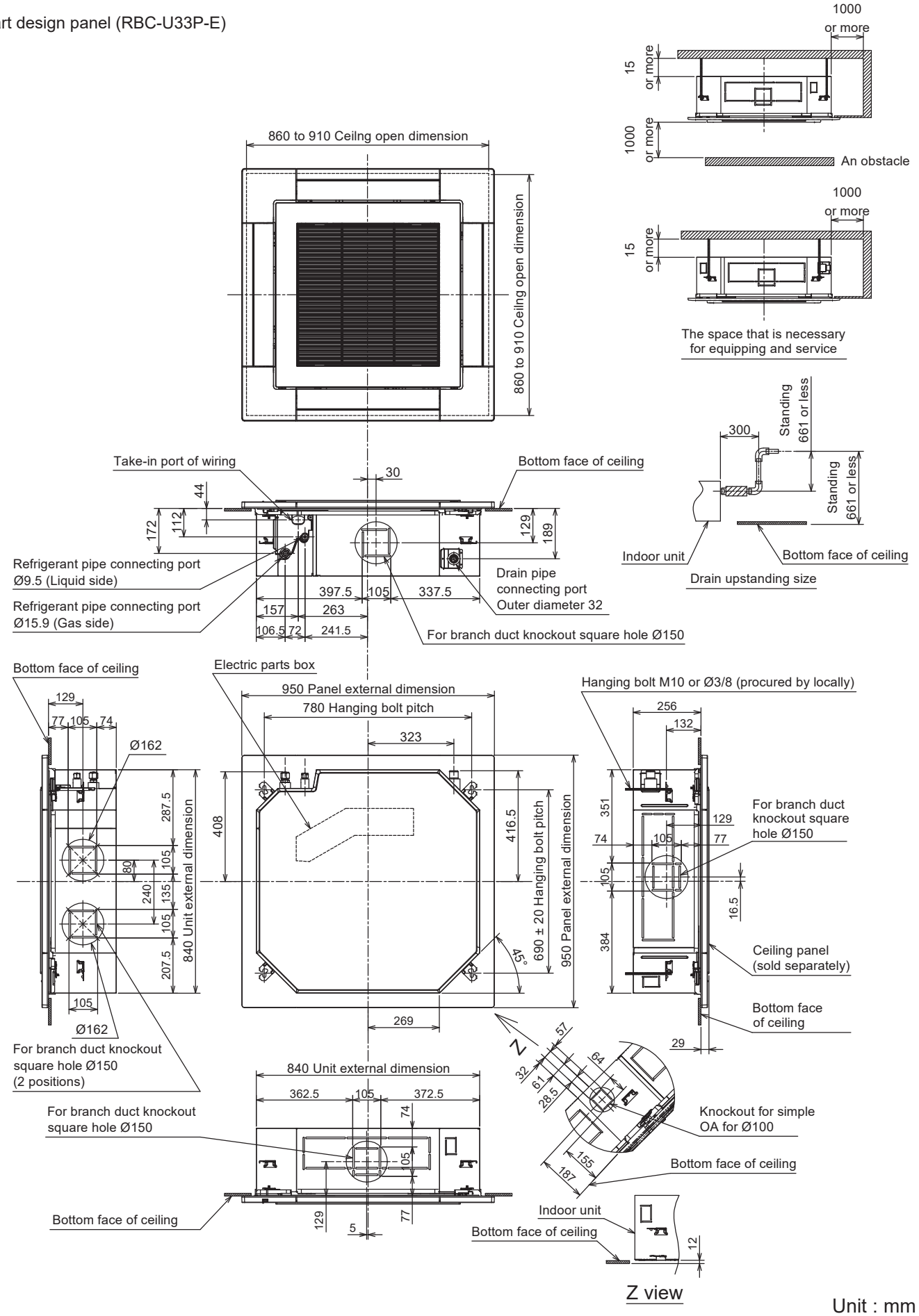

RAV-HM*__1UTP-E / TR (*110 / 140)

Smart design panel (RBC-U33P-E)

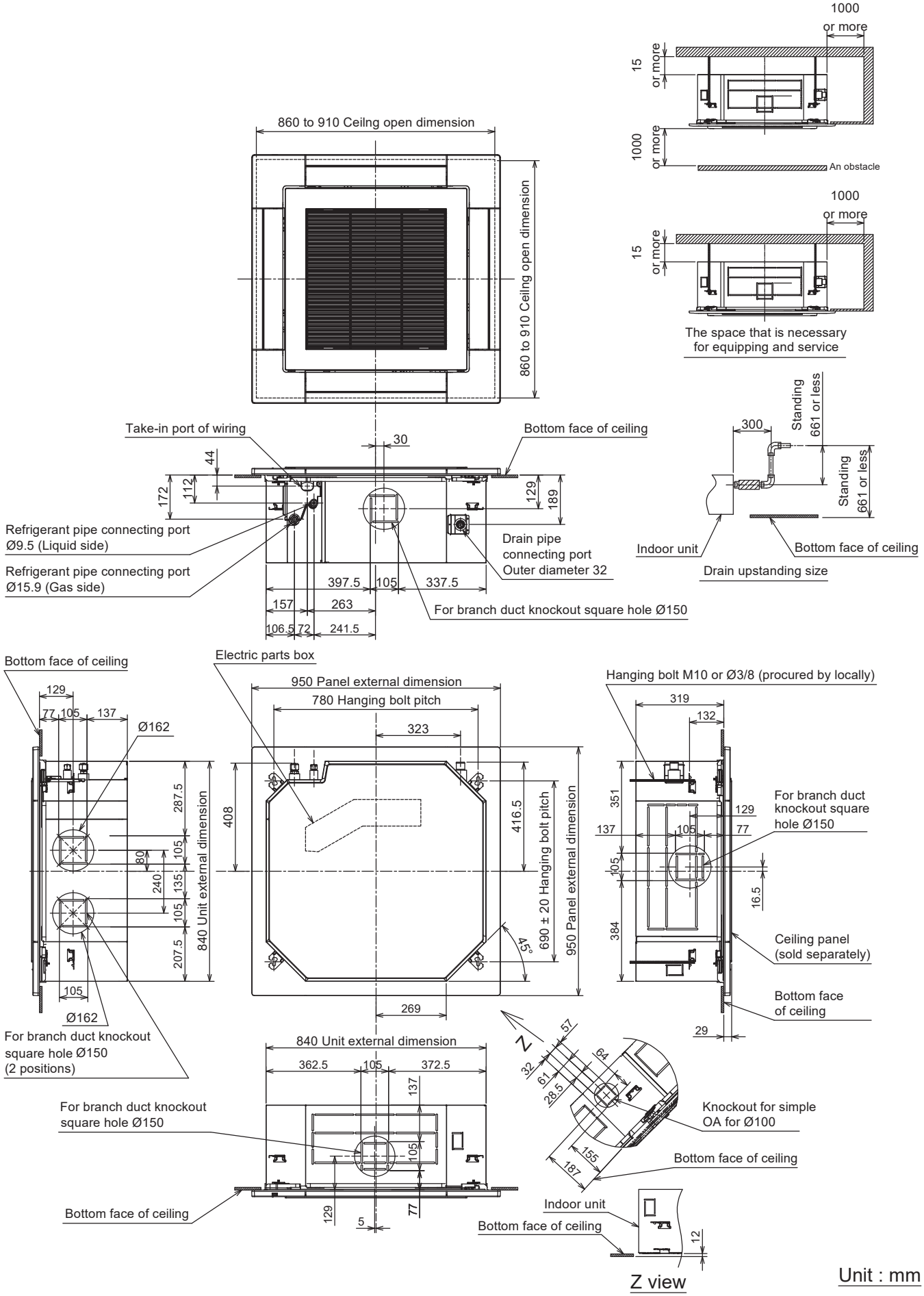

2-1-3. Wiring Diagrams

RAV-HM561UTP-E/TR, RAV-HM801UTP-E/TR, RAV-HM1101UTP-E/TR, RAV-HM1401UTP-E/TR

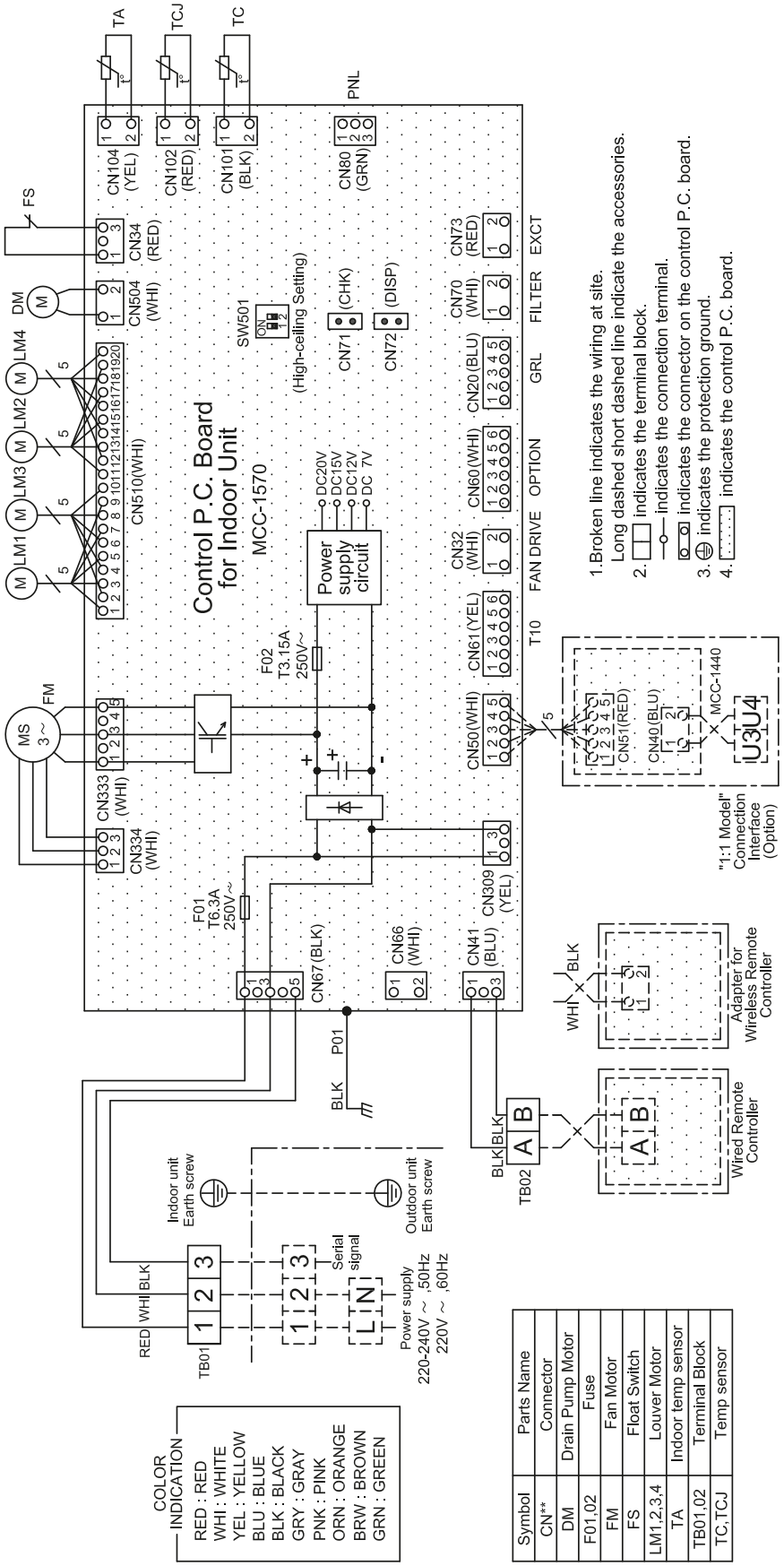

Symbol	Parts Name
CN**	Connector
DM	Drain Pump Motor
F01,02	Fuse
FM	Fan Motor
FS	Float Switch
LM1,2,3,4	Louver Motor
TA	Indoor temp sensor
TB01,02	Terminal Block
TC,TCJ	Temp sensor

2-1-4. Sensible Capacity Table

Product models : RAV-HM561UTP-E/TR ; RAV-GM561ATP-E1/TR1, RAV-GM561ATJP-E1

Specification of product at standard condition

Standard Condition		
	Indoor	27°C (DB) / 19°C (WB)
	Outdoor	35°C (DB) / 24°C (WB)

Total Cooling Capacity (TC)	5.00	kW
Sensible Heat Capacity (SHC)	4.21	kW

Outdoor air temperature	Indoor air temperature													
	20.0°C (DB) 14.0°C (WB)		23.0°C (DB) 16.0°C (WB)		26.0°C (DB) 18.0°C (WB)		27.0°C (DB) 19.0°C (WB)		28.0°C (DB) 20.0°C (WB)		30.0°C (DB) 22.0°C (WB)		32.0°C (DB) 24.0°C (WB)	
DB (°C)	TC	SHC	TC	SHC	TC	SHC	TC	SHC	TC	SHC	TC	SHC	TC	SHC
10	5.42	4.90	5.99	5.23	6.42	5.56	6.60	5.56	6.79	5.57	7.19	5.53	7.52	5.45
11	5.37	4.85	5.93	5.18	6.35	5.51	6.54	5.51	6.73	5.51	7.12	5.48	7.45	5.39
12	5.32	4.80	5.87	5.13	6.29	5.45	6.48	5.45	6.66	5.46	7.05	5.43	7.38	5.34
13	5.27	4.75	5.82	5.08	6.23	5.40	6.41	5.40	6.60	5.40	6.98	5.37	7.30	5.29
14	5.21	4.71	5.76	5.03	6.17	5.35	6.35	5.34	6.53	5.35	6.91	5.32	7.23	5.24
15	5.16	4.66	5.70	4.98	6.10	5.29	6.28	5.29	6.46	5.30	6.84	5.26	7.16	5.18
16	5.11	4.61	5.64	4.92	6.04	5.24	6.22	5.24	6.40	5.24	6.77	5.21	7.09	5.13
17	5.06	4.56	5.58	4.87	5.98	5.18	6.16	5.18	6.33	5.19	6.70	5.16	7.01	5.08
18	5.00	4.52	5.52	4.82	5.92	5.13	6.09	5.13	6.27	5.13	6.63	5.10	6.94	5.02
19	4.95	4.47	5.47	4.77	5.85	5.08	6.03	5.07	6.20	5.08	6.56	5.05	6.87	4.97
20	4.90	4.42	5.41	4.72	5.79	5.02	5.96	5.02	6.13	5.02	6.49	5.00	6.79	4.92
21	4.84	4.37	5.35	4.67	5.73	4.97	5.90	4.97	6.07	4.97	6.43	4.94	6.72	4.86
22	4.79	4.33	5.29	4.62	5.67	4.91	5.83	4.91	6.00	4.92	6.36	4.89	6.65	4.81
23	4.74	4.28	5.23	4.57	5.60	4.86	5.77	4.86	5.94	4.86	6.29	4.83	6.57	4.76
24	4.69	4.23	5.18	4.52	5.54	4.81	5.71	4.80	5.87	4.81	6.22	4.78	6.50	4.71
25	4.63	4.18	5.12	4.47	5.48	4.75	5.64	4.75	5.80	4.75	6.15	4.73	6.43	4.65
26	4.58	4.14	5.06	4.42	5.42	4.70	5.58	4.70	5.74	4.70	6.08	4.67	6.35	4.60
27	4.53	4.09	5.00	4.37	5.36	4.64	5.51	4.64	5.67	4.65	6.01	4.62	6.28	4.55
28	4.48	4.04	4.94	4.32	5.29	4.59	5.45	4.59	5.61	4.59	5.94	4.57	6.21	4.49
29	4.42	3.99	4.88	4.26	5.23	4.54	5.39	4.53	5.54	4.54	5.87	4.51	6.14	4.44
30	4.37	3.95	4.83	4.21	5.17	4.48	5.32	4.48	5.47	4.48	5.80	4.46	6.06	4.39
31	4.32	3.90	4.77	4.16	5.11	4.43	5.26	4.43	5.41	4.43	5.73	4.40	5.99	4.34
32	4.27	3.85	4.71	4.11	5.04	4.37	5.19	4.37	5.34	4.38	5.66	4.35	5.92	4.28
33	4.21	3.80	4.65	4.06	4.98	4.32	5.13	4.32	5.28	4.32	5.59	4.30	5.84	4.23
34	4.16	3.76	4.59	4.01	4.92	4.27	5.06	4.26	5.21	4.27	5.52	4.24	5.77	4.18
35	**4.11**	**3.71**	**4.54**	**3.96**	**4.86**	**4.21**	**5.00**	**4.21**	**5.14**	**4.21**	**5.45**	**4.19**	**5.70**	**4.12**
36	4.05	3.66	4.48	3.91	4.79	4.16	4.94	4.16	5.08	4.16	5.38	4.14	5.62	4.07
37	4.00	3.61	4.42	3.86	4.73	4.10	4.87	4.10	5.01	4.11	5.31	4.08	5.55	4.02
38	3.95	3.57	4.36	3.81	4.67	4.05	4.81	4.05	4.94	4.05	5.24	4.03	5.48	3.96
39	3.90	3.52	4.30	3.76	4.61	3.99	4.74	3.99	4.88	4.00	5.17	3.97	5.40	3.91
40	3.15	2.84	3.48	3.04	3.73	3.23	3.84	3.23	3.95	3.23	4.18	3.21	4.37	3.16
41	3.05	2.75	3.36	2.94	3.60	3.12	3.71	3.12	3.81	3.13	4.04	3.11	4.22	3.06
42	2.94	2.65	3.25	2.83	3.48	3.02	3.58	3.01	3.68	3.02	3.90	3.00	4.08	2.95
43	2.84	2.56	3.13	2.73	3.35	2.91	3.45	2.91	3.55	2.91	3.76	2.89	3.93	2.85
44	2.73	2.46	3.01	2.63	3.23	2.80	3.32	2.80	3.42	2.80	3.62	2.78	3.79	2.74
45	1.90	1.71	2.10	1.83	2.24	1.95	2.31	1.95	2.38	1.95	2.52	1.94	2.63	1.91
46	1.79	1.62	1.98	1.73	2.12	1.84	2.18	1.84	2.24	1.84	2.38	1.83	2.49	1.80

Digital Inverter R32 Sensible Heat Capacity : RAV-HM***UTP-E/TR

		indoor air temp.																	
unit size	outdoor air temp.	14.0CWB		15.0CWB		16.0CWB		17.0CWB		18.0CWB		19.0CWB		20.0CWB		22.0CWB		24.0CWB	
		20.0CDB		21.5CDB		23.0CDB		24.5CDB		26.0CDB		27.0CDB		28.0CDB		30.0CDB		32.0CDB	
	CDB	TC	SHC	TC	SHC	TC	SHC	TC	SHC	TC	SHC	TC	SHC	TC	SHC	TC	SHC	TC	SHC
801	10.0	6.3	4.7	6.6	4.9	6.9	5.2	7.2	5.4	7.4	5.6	7.7	5.7	7.9	5.9	8.3	6.2	8.7	6.5
	12.0	6.3	4.7	6.6	4.9	6.9	5.2	7.1	5.3	7.4	5.5	7.6	5.7	7.8	5.8	8.3	6.2	8.7	6.5
	14.0	6.2	4.6	6.5	4.9	6.9	5.1	7.1	5.3	7.3	5.5	7.6	5.6	7.8	5.8	8.2	6.1	8.6	6.4
	16.0	6.2	4.6	6.5	4.8	6.8	5.1	7.1	5.3	7.3	5.4	7.5	5.6	7.7	5.8	8.2	6.1	8.6	6.4
	18.0	6.1	4.6	6.4	4.8	6.8	5.0	7.0	5.2	7.2	5.4	7.5	5.6	7.7	5.7	8.1	6.1	8.5	6.3
	20.0	6.1	4.5	6.4	4.8	6.7	5.0	6.9	5.2	7.2	5.4	7.4	5.5	7.6	5.7	8.1	6.0	8.4	6.3
	21.0	6.0	4.5	6.4	4.7	6.7	5.0	6.9	5.2	7.1	5.3	7.4	5.5	7.6	5.6	8.0	6.0	8.4	6.3
	23.0	6.0	4.5	6.3	4.7	6.6	4.9	6.8	5.1	7.1	5.3	7.3	5.4	7.5	5.6	7.9	5.9	8.3	6.2
	25.0	5.9	4.4	6.2	4.6	6.5	4.9	6.8	5.0	7.0	5.2	7.2	5.4	7.4	5.5	7.8	5.9	8.2	6.1
	27.0	5.8	4.4	6.1	4.6	6.5	4.8	6.7	5.0	6.9	5.2	7.1	5.3	7.3	5.5	7.8	5.8	8.1	6.0
	29.0	5.8	4.3	6.1	4.5	6.4	4.8	6.6	4.9	6.8	5.1	7.0	5.2	7.2	5.4	7.6	5.7	8.0	6.0
	31.0	5.7	4.2	6.0	4.5	6.3	4.7	6.5	4.9	6.7	5.0	6.9	5.2	7.1	5.3	7.5	5.6	7.9	5.9
	33.0	5.6	4.2	5.9	4.4	6.2	4.6	6.4	4.8	6.6	4.9	6.8	5.1	7.0	5.2	7.4	5.5	7.8	5.8
	35.0	5.5	4.1	5.8	4.3	6.1	4.5	6.3	4.7	6.5	4.9	6.7	5.0	6.9	5.1	7.3	5.4	7.6	5.7
	37.0	5.4	4.0	5.7	4.2	6.0	4.4	6.2	4.6	6.4	4.8	6.6	4.9	6.8	5.0	7.2	5.3	7.5	5.6
	39.0	5.3	3.9	5.6	4.2	5.8	4.4	6.0	4.5	6.3	4.7	6.4	4.8	6.6	4.9	7.0	5.2	7.3	5.5

		Indoor air temp.																	
Unit size	Outdoor air temp.	14.0 CWB		15.0 CWB		16.0 CWB		17.0 CWB		18.0 CWB		19.0 CWB		20.0 CWB		22.0 CWB		24.0 CWB	
		20.0 CDB		21.0 CDB		23.0 CDB		24.0 CDB		26.0 CDB		27.0 CDB		28.0 CDB		30.0 CDB		32.0 CDB	
	°C DB	TC	SHC	TC	SHC	TC	SHC	TC	SHC	TC	SHC	TC	SHC	TC	SHC	TC	SHC	TC	SHC
1101	10.0	9.09	7.83	9.41	8.00	10.04	8.34	10.28	8.52	10.75	8.87	11.07	8.85	11.39	8.85	12.06	8.77	12.61	8.60
	12.0	9.03	7.78	9.35	7.95	9.98	8.29	10.21	8.47	10.68	8.81	11.00	8.80	11.31	8.79	11.98	8.71	12.53	8.54
	14.0	8.97	7.72	9.28	7.90	9.90	8.23	10.14	8.40	10.61	8.75	10.92	8.73	11.23	8.73	11.89	8.65	12.44	8.48
	16.0	8.90	7.66	9.21	7.83	9.82	8.16	10.06	8.34	10.52	8.68	10.83	8.66	11.14	8.66	11.80	8.58	12.34	8.41
	18.0	8.82	7.59	9.12	7.76	9.74	8.09	9.97	8.26	10.43	8.60	10.73	8.59	11.04	8.58	11.69	8.50	12.23	8.34
	20.0	8.71	7.50	9.02	7.67	9.62	8.00	9.85	8.17	10.31	8.50	10.61	8.49	10.91	8.48	11.56	8.40	12.09	8.24
	21.0	8.68	7.48	8.99	7.65	9.59	7.97	9.82	8.14	10.27	8.47	10.57	8.46	10.87	8.45	11.52	8.37	12.05	8.21
	23.0	8.59	7.39	8.88	7.56	9.48	7.88	9.71	8.05	10.15	8.38	10.45	8.36	10.75	8.36	11.39	8.28	11.91	8.12
	25.0	8.49	7.31	8.79	7.48	9.38	7.79	9.60	7.96	10.04	8.28	10.34	8.27	10.63	8.26	11.26	8.19	11.78	8.03
	27.0	8.36	7.20	8.66	7.36	9.24	7.68	9.46	7.84	9.89	8.16	10.18	8.15	10.47	8.14	11.09	8.07	11.60	7.91
	29.0	8.24	7.09	8.53	7.26	9.10	7.56	9.32	7.72	9.75	8.04	10.03	8.03	10.32	8.02	10.93	7.95	11.43	7.79
	31.0	8.11	6.98	8.39	7.14	8.95	7.44	9.17	7.60	9.59	7.91	9.87	7.90	10.15	7.89	10.75	7.82	11.25	7.67
	33.0	7.97	6.86	8.24	7.01	8.80	7.31	9.00	7.46	9.42	7.77	9.70	7.76	9.97	7.75	10.56	7.68	11.05	7.53
	35.0	7.80	6.72	8.07	6.87	8.62	7.16	8.82	7.31	9.23	7.61	9.50	7.60	9.77	7.60	10.35	7.53	10.82	7.38
	37.0	7.65	6.58	7.92	6.74	8.45	7.02	8.65	7.17	9.05	7.46	9.31	7.45	9.58	7.45	10.14	7.38	10.61	7.23
	39.0	7.48	6.44	7.74	6.58	8.26	6.86	8.45	7.01	8.84	7.29	9.10	7.28	9.36	7.28	9.91	7.21	10.37	7.07

		indoor air temp.																	
unit size	outdoor air temp.	14.0CWB		15.0CWB		16.0CWB		17.0CWB		18.0CWB		19.0CWB		20.0CWB		22.0CWB		24.0CWB	
		20.0CDB		21.5CDB		23.0CDB		24.5CDB		26.0CDB		27.0CDB		28.0CDB		30.0CDB		32.0CDB	
	CDB	TC	SHC	TC	SHC	TC	SHC	TC	SHC	TC	SHC	TC	SHC	TC	SHC	TC	SHC	TC	SHC
1401	10.0	11.3	8.7	11.9	9.2	12.4	9.6	12.9	10.0	13.3	10.3	13.7	10.6	14.1	10.9	14.9	11.6	15.6	12.1
	12.0	11.2	8.7	11.8	9.1	12.4	9.6	12.8	9.9	13.2	10.3	13.6	10.6	14.0	10.9	14.8	11.5	15.5	12.0
	14.0	11.1	8.6	11.7	9.1	12.3	9.5	12.7	9.9	13.2	10.2	13.5	10.5	13.9	10.8	14.8	11.4	15.4	12.0
	16.0	11.0	8.6	11.6	9.0	12.2	9.5	12.6	9.8	13.1	10.1	13.5	10.4	13.8	10.7	14.7	11.4	15.3	11.9
	18.0	11.0	8.5	11.5	8.9	12.1	9.4	12.5	9.7	13.0	10.0	13.3	10.3	13.7	10.6	14.5	11.3	15.2	11.8
	20.0	10.9	8.4	11.4	8.9	12.0	9.3	12.4	9.6	12.9	10.0	13.2	10.3	13.6	10.6	14.4	11.2	15.1	11.7
	21.0	10.8	8.4	11.4	8.8	12.0	9.3	12.4	9.6	12.8	9.9	13.2	10.2	13.6	10.5	14.4	11.1	15.0	11.6
	23.0	10.7	8.3	11.3	8.7	11.8	9.2	12.3	9.5	12.7	9.8	13.0	10.1	13.4	10.4	14.2	11.0	14.9	11.5
	25.0	10.6	8.2	11.1	8.6	11.7	9.1	12.1	9.4	12.5	9.7	12.9	10.0	13.3	10.3	14.1	10.9	14.7	11.4
	27.0	10.5	8.1	11.0	8.5	11.6	9.0	12.0	9.3	12.4	9.6	12.7	9.9	13.1	10.2	13.9	10.8	14.5	11.3
	29.0	10.3	8.0	10.9	8.4	11.4	8.8	11.8	9.2	12.2	9.5	12.6	9.7	12.9	10.0	13.7	10.6	14.3	11.1
	31.0	10.2	7.9	10.7	8.3	11.2	8.7	11.6	9.0	12.0	9.3	12.4	9.6	12.8	9.9	13.5	10.5	14.1	10.9
	33.0	10.0	7.8	10.5	8.2	11.1	8.6	11.5	8.9	11.9	9.2	12.2	9.5	12.6	9.7	13.3	10.3	13.9	10.8
	35.0	9.9	7.6	10.4	8.0	10.9	8.4	11.3	8.7	11.7	9.0	12.0	9.3	12.3	9.6	13.1	10.1	13.7	10.6
	37.0	9.7	7.5	10.2	7.9	10.7	8.3	11.1	8.6	11.4	8.9	11.8	9.1	12.1	9.4	12.8	9.9	13.4	10.4
	39.0	9.5	7.3	10.0	7.7	10.5	8.1	10.8	8.4	11.2	8.7	11.5	8.9	11.9	9.2	12.6	9.7	13.1	10.2

TC:Total Capacity [kW]
SHC:Sensible Heat Capacity [kW]

2-1-5. Part Load performance

Combination

Indoor: RAV-HM561UTP-E/TR

Outdoor: RAV-GM561ATP-E1/TR1, RAV-GM561ATJP-E1

Operation range		Cooling		Heating	
		Q	P	Q	P
MINIMUM	W	1200	260	1500	260
RATING	W	5000	1560	5300	1360
MAXIMUM	W	5600	1860	6300	2080

Cooling

Outdoor Temperature DB (°C)	Parts Load (%)																			
	100		90		80		70		60		50		40		30		20		10	
	Q	P	Q	P	Q	P	Q	P	Q	P	Q	P	Q	P	Q	P	Q	P	Q	P
10	6604	1001	5944	891	5283	781	4623	672	3963	562	3302	452	2642	342	1981	233	1585	167	1585	167
11	6540	1023	5886	911	5232	799	4578	687	3924	575	3270	462	2616	350	1962	238	1570	171	1570	171
12	6476	1046	5828	931	5181	816	4533	702	3886	587	3238	472	2590	358	1943	243	1554	174	1554	174
13	6412	1068	5771	951	5129	834	4488	717	3847	600	3206	483	2565	365	1924	248	1539	178	1539	178
14	6348	1090	5713	971	5078	851	4443	732	3809	612	3174	493	2539	373	1904	253	1523	182	1523	182
15	6283	1113	5655	991	5027	869	4398	747	3770	625	3142	503	2513	381	1885	259	1508	185	1508	185
16	6219	1135	5597	1011	4975	886	4353	762	3732	637	3110	513	2488	388	1866	264	1493	189	1493	189
17	6155	1158	5540	1031	4924	904	4309	777	3693	650	3078	523	2462	396	1847	269	1477	193	1477	193
18	6091	1180	5482	1051	4873	921	4264	792	3655	662	3045	533	2436	404	1827	274	1462	197	1462	197
19	6027	1202	5424	1070	4821	939	4219	807	3616	675	3013	543	2411	411	1808	279	1446	200	1446	200
20	5963	1225	5366	1090	4770	956	4174	822	3578	687	2981	553	2385	419	1789	285	1431	204	1431	204
21	5898	1247	5309	1110	4719	974	4129	837	3539	700	2949	563	2359	427	1770	290	1416	208	1416	208
22	5834	1269	5251	1130	4667	991	4084	852	3501	713	2917	573	2334	434	1750	295	1400	212	1400	212
23	5770	1292	5193	1150	4616	1008	4039	867	3462	725	2885	584	2308	442	1731	300	1385	215	1385	215
24	5706	1314	5135	1170	4565	1026	3994	882	3424	738	2853	594	2282	450	1712	305	1369	219	1369	219
25	5642	1336	5078	1190	4513	1043	3949	897	3385	750	2821	604	2257	457	1693	311	1354	223	1354	223
26	5578	1359	5020	1210	4462	1061	3904	912	3347	763	2789	614	2231	465	1673	316	1339	226	1339	226
27	5513	1381	4962	1230	4411	1078	3859	927	3308	775	2757	624	2205	472	1654	321	1323	230	1323	230
28	5449	1403	4904	1250	4359	1096	3814	942	3270	788	2725	634	2180	480	1635	326	1308	234	1308	234
29	5385	1426	4847	1269	4308	1113	3770	957	3231	800	2693	644	2154	488	1616	331	1292	238	1292	238
30	5321	1448	4789	1289	4257	1131	3725	972	3193	813	2660	654	2128	495	1596	337	1277	241	1277	241
31	5257	1471	4731	1309	4205	1148	3680	987	3154	826	2628	664	2103	503	1577	342	1262	245	1262	245
32	5193	1493	4673	1329	4154	1166	3635	1002	3116	838	2596	674	2077	511	1558	347	1246	249	1246	249
33	5128	1515	4616	1349	4103	1183	3590	1017	3077	851	2564	685	2051	518	1539	352	1231	253	1231	253
34	5064	1538	4558	1369	4051	1200	3545	1032	3039	863	2532	695	2026	526	1519	357	1215	256	1215	256
35	**5000**	**1560**	**4500**	**1389**	**4000**	**1218**	**3500**	**1047**	**3000**	**876**	**2500**	**705**	**2000**	**534**	**1500**	**363**	**1200**	**260**	**1200**	**260**
36	4936	1582	4442	1409	3949	1235	3455	1062	2962	888	2468	715	1974	541	1481	368	1185	264	1185	264
37	4872	1605	4385	1429	3897	1253	3410	1077	2923	901	2436	725	1949	549	1462	373	1169	267	1169	267
38	4808	1627	4327	1449	3846	1270	3365	1092	2885	913	2404	735	1923	557	1442	378	1154	271	1154	271
39	4743	1649	4269	1469	3795	1288	3320	1107	2846	926	2372	745	1897	564	1423	383	1138	275	1138	275
40	4325	1495	3893	1331	3460	1167	3028	1003	2595	839	2163	675	1730	511	1298	347	1038	249	1038	249
41	4216	1495	3795	1331	3373	1167	2951	1003	2530	839	2108	675	1686	511	1265	347	1012	249	1012	249
42	4107	1495	3697	1331	3286	1167	2875	1003	2464	839	2054	675	1643	511	1232	347	986	249	986	249
43	3998	1495	3599	1331	3199	1167	2799	1003	2399	839	1999	675	1599	511	1200	347	960	249	960	249
44	3890	1495	3501	1331	3112	1167	2723	1003	2334	839	1945	675	1556	511	1167	347	933	249	933	249
45	3111	1160	2800	1033	2489	906	2178	779	1867	651	1556	524	1245	397	933	270	747	193	747	193
46	3002	1160	2702	1033	2402	906	2102	779	1801	651	1501	524	1201	397	901	270	721	193	721	193

Heating

Outdoor Temperature DB (°C)	Parts Load (%)																			
	100		90		80		70		60		50		40		30		20		10	
	Q	P	Q	P	Q	P	Q	P	Q	P	Q	P	Q	P	Q	P	Q	P	Q	P
-15	2400	817	2160	724	1920	632	1680	540	1440	448	1200	356	960	264	720	172	679	156	679	156
-14	2550	845	2295	750	2040	654	1785	559	1530	464	1275	368	1020	273	765	178	722	162	722	162
-13	2700	874	2430	775	2160	676	1890	578	1620	479	1350	381	1080	282	810	184	764	167	764	167
-12	2850	902	2565	800	2280	699	1995	597	1710	495	1425	393	1140	291	855	190	807	172	807	172
-11	3000	931	2700	826	2400	721	2100	616	1800	511	1500	406	1200	301	900	196	849	178	849	178
-10	3150	959	2835	851	2520	743	2205	634	1890	526	1575	418	1260	310	945	202	892	183	892	183
-9	3300	987	2970	876	2640	765	2310	653	1980	542	1650	430	1320	319	990	208	934	189	934	189
-8	3451	1016	3105	901	2760	787	2415	672	2070	557	1725	443	1380	328	1035	214	977	194	977	194
-7	3601	1044	3240	927	2880	809	2520	691	2160	573	1800	455	1440	337	1080	220	1019	200	1019	200
-6	3627	1062	3264	942	2902	822	2539	703	2176	583	1814	463	1451	343	1088	223	1027	203	1027	203
-5	3654	1080	3288	958	2923	836	2558	714	2192	593	1827	471	1462	349	1096	227	1034	206	1034	206
-4	3681	1097	3313	974	2944	850	2576	726	2208	602	1840	478	1472	355	1104	231	1042	210	1042	210
-3	3707	1115	3337	989	2966	864	2595	738	2224	612	1854	486	1483	360	1112	235	1049	213	1049	213
-2	3734	1133	3361	1005	2987	877	2614	749	2240	622	1867	494	1494	366	1120	238	1057	217	1057	217
-1	3761	1150	3385	1021	3008	891	2632	761	2256	631	1880	502	1504	372	1128	242	1064	220	1064	220
0	3787	1168	3409	1036	3030	905	2651	773	2272	641	1894	509	1515	377	1136	246	1072	223	1072	223
1	3814	1186	3433	1052	3051	918	2670	785	2288	651	1907	517	1526	383	1144	249	1079	227	1079	227
2	3841	1204	3457	1068	3072	932	2688	796	2304	660	1920	525	1536	389	1152	253	1087	230	1087	230
3	3903	1220	3513	1082	3123	945	2732	807	2342	669	1952	532	1561	394	1171	257	1105	233	1105	233
4	3966	1236	3570	1096	3173	957	2776	818	2380	678	1983	539	1587	399	1190	260	1123	236	1123	236
5	4029	1252	3626	1111	3223	970	2821	828	2418	687	2015	546	1612	405	1209	263	1140	239	1140	239
6	5163	1339	4647	1188	4131	1037	3614	886	3098	735	2582	584	2065	433	1549	282	1461	256	1461	256
7	**5300**	**1360**	**4770**	**1207**	**4240**	**1053**	**3710**	**900**	**3180**	**746**	**2650**	**593**	**2120**	**439**	**1590**	**286**	**1500**	**260**	**1500**	**260**
8	5437	1381	4893	1225	4349	1069	3806	914	3262	758	2718	602	2175	446	1631	290	1539	264	1539	264
9	5574	1402	5016	1244	4459	1086	3901	928	3344	769	2787	611	2229	453	1672	295	1577	268	1577	268
10	5710	1423	5139	1263	4568	1102	3997	942	3426	781	2855	620	2284	460	1713	299	1616	272	1616	272
11	5847	1444	5262	1281	4678	1118	4093	955	3508	793	2924	630	2339	467	1754	304	1655	276	1655	276
12	5984	1465	5385	1300	4787	1135	4189	969	3590	804	2992	639	2394	473	1795	308	1694	280	1694	280
13	6121	1486	5509	1319	4897	1151	4284	983	3672	816	3060	648	2448	480	1836	313	1732	284	1732	284
14	6257	1507	5632	1337	5006	1167	4380	997	3754	827	3129	657	2503	487	1877	317	1771	288	1771	288
15	6394	1528	5755	1356	5115	1184	4476	1011	3837	839	3197	666	2558	494	1918	321	1810	292	1810	292
16	6531	1550	5878	1375	5225	1200	4572	1025	3919	850	3265	676	2612	501	1959	326	1848	296	1848	296
17	6668	1571	6001	1393	5334	1216	4667	1039	4001	862	3334	685	2667	508	2000	330	1887	300	1887	300
18	6805	1592	6124	1412	5444	1233	4763	1053	4083	873	3402	694	2722	514	2041	335	1926	304	1926	304
19	6941	1613	6247	1431	5553	1249	4859	1067	4165	885	3471	703	2777	521	2082	339	1965	308	1965	308
20	7078	1634	6370	1449	5662	1265	4955	1081	4247	897	3539	712	2831	528	2123	344	2003	312	2003	312
21	7215	1655	6493	1468	5772	1281	5050	1095	4329	908	3607	721	2886	535	2164	348	2042	316	2042	316
22	7352	1676	6616	1487	5881	1298	5146	1109	4411	920	3676	731	2941	542	2205	352	2081	320	2081	320
23	7488	1697	6740	1505	5991	1314	5242	1123	4493	931	3744	740	2995	548	2247	357	2119	324	2119	324
24	7625	1718	6863	1524	6100	1330	5338	1137	4575	943	3813	749	3050	555	2288	361	2158	328	2158	328

Combination

Indoor unit : RAV-HM801UTP-E/TR

Outdoor unit : RAV-GM801ATP-E/TR, RAV-GM801ATJP-E

	Cooling		Heating	
	Capacity Q (W)	Power consumption W (W)	Capacity Q (W)	Power consumption W (W)
MINIMUM	1500	260	1500	260
RATING	6700	2220	7700	2130

Q: Capacity in W
W: Power Consumption in W

Cooling

Outdoor temperature (°C)		Load (%)									
		100	90	80	70	60	50	40	30	20	10
40	Q	6330	5690	5060	4430	3800	3160	2530	1900	1420	1420
	W	2420	1970	1550	1190	890	660	500	370	280	280
35	Q	6700	6030	5360	4690	4020	3350	2680	2010	1500	1500
	W	2220	1810	1420	1090	820	610	460	340	260	260
30	Q	7080	6370	5670	4960	4250	3540	2830	2130	1590	1590
	W	2020	1650	1300	990	750	550	420	310	240	240
25	Q	7360	6620	5890	5150	4420	3680	2950	2210	1650	1650
	W	1830	1490	1170	900	680	500	380	280	220	220
20	Q	7470	6720	5980	5230	4480	3740	2990	2240	1670	1670
	W	1650	1340	1050	810	610	450	340	250	190	190

Heating

Outdoor temperature (°C)		Load (%)									
		100	90	80	70	60	50	40	30	20	10
15	Q	9100	8190	7280	6370	5460	4560	3640	2730	1820	1780
	W	2320	1940	1590	1280	1000	760	560	410	290	280
10	Q	8260	7440	6610	5780	4960	4130	3310	2470	1650	1610
	W	2210	1860	1520	1220	950	730	540	400	280	270
7	Q	7700	6930	6160	5390	4620	3850	3080	2310	1540	1500
	W	2130	1790	1460	1170	920	700	520	380	270	260
5	Q	5930	5340	4750	4150	3560	2970	2370	1780	1180	1160
	W	1830	1530	1260	1010	790	600	440	330	230	220
2	Q	5800	5220	4640	4060	3480	2900	2320	1740	1160	1130
	W	1800	1510	1240	990	780	590	440	320	230	220
0	Q	5710	5140	4570	4000	3430	2860	2290	1710	1140	1110
	W	1790	1500	1230	980	770	590	430	320	230	220
-5	Q	5510	4960	4410	3860	3310	2760	2200	1650	1100	1070
	W	1740	1460	1200	960	750	570	420	310	220	210
-7	Q	5420	4880	4340	3800	3250	2710	2170	1620	1080	1060
	W	1730	1450	1190	950	740	570	420	310	220	210
-10	Q	5010	4510	4010	3500	3000	2510	2000	1500	1000	980
	W	1660	1390	1140	920	720	550	400	300	210	200
-15	Q	3850	3470	3080	2700	2310	1930	1540	1150	770	750
	W	1490	1240	1020	820	640	490	360	270	190	180

Combination

Indoor unit : RAV-HM1101UTP-E/TR

Outdoor unit : RAV-GM1101ATP-E/TR, RAV-GM1101ATJP-E

	Cooling		Heating	
	Capacity(W)	Power consumption (W)	Capacity(W)	Power consumption (W)
MINIMUM	3000	600	3000	600
RATING	9500	2870	11200	2930

Q: Capacity in W
W: Power Consumption in W

Cooling

Outdoor temperature(°C)		Load(%)									
		100	**90**	**80**	**70**	**60**	**50**	**40**	**30**	**20**	**10**
40	Q	9000	8100	7200	6300	5400	4500	3600	2840	2840	2840
	W	3120	2490	2020	1630	1300	1010	790	650	650	650
35	Q	9500	8550	7600	6650	5700	4750	3800	3000	3000	3000
	W	2870	2290	1860	1500	1200	930	730	600	600	600
30	Q	9960	8960	7960	6970	5970	4980	3980	3140	3140	3140
	W	2600	2080	1690	1360	1090	840	660	540	540	540
25	Q	10340	9300	8270	7240	6200	5170	4130	3260	3260	3260
	W	2370	1890	1530	1240	990	770	600	490	490	490
20	Q	10610	9550	8490	7430	6370	5310	4240	3350	3350	3350
	W	2140	1710	1390	1120	890	690	540	450	450	450

Heating

Outdoor temperature(°C)		Load(%)									
		100	**90**	**80**	**70**	**60**	**50**	**40**	**30**	**20**	**10**
15	Q	13410	12060	10730	9390	8050	6700	5360	4010	3590	3590
	W	3220	2760	2320	1890	1510	1190	920	710	660	660
10	Q	12190	10950	9750	8530	7310	6090	4870	3640	3260	3260
	W	3060	2630	2210	1800	1440	1130	870	680	630	630
7	Q	11200	10080	8960	7840	6720	5600	4480	3360	3000	3000
	W	2930	2520	2120	1730	1380	1080	840	650	600	600
5	Q	8630	7760	6900	6040	5180	4310	3450	2580	2310	2310
	W	2510	2160	1820	1480	1180	930	720	560	520	520
2	Q	8440	7580	6750	5900	5060	4210	3370	2520	2260	2260
	W	2480	2130	1790	1460	1170	910	710	550	510	510
0	Q	8310	7470	6650	5820	4990	4150	3320	2490	2230	2230
	W	2460	2110	1770	1450	1160	910	700	550	500	500
-5	Q	8010	7200	6410	5610	4810	4000	3200	2400	2150	2150
	W	2400	2060	1730	1410	1130	880	680	530	490	490
-7	Q	7890	7090	6310	5520	4730	3940	3150	2360	2110	2110
	W	2370	2040	1710	1400	1120	880	680	530	490	490
-10	Q	7280	6550	5830	5100	4370	3640	2910	2180	1950	1950
	W	2290	1970	1650	1350	1080	840	650	510	470	470
-15	Q	5600	5040	4480	3920	3360	2800	2240	1680	1500	1500
	W	2040	1760	1480	1200	960	750	580	450	420	420

Combination

Indoor unit : RAV-HM1401UTP-E/TR

Outdoor unit : RAV-GM1401ATP-E/TR, RAV-GM1401ATJP-E

	Cooling		Heating	
	Capacity(W)	Power consumption (W)	Capacity(W)	Power consumption (W)
MINIMUM	3000	600	3000	600
RATING	12000	4290	13000	3460

Q: Capacity in W
W: Power Consumption in W

Cooling

Outdoor temperature(ºC)		Load(%)									
		100	**90**	**80**	**70**	**60**	**50**	**40**	**30**	**20**	**10**
40	Q	11370	10230	9100	7960	6820	5680	4550	3410	2840	2840
	W	4670	3770	2960	2270	1730	1300	990	750	650	650
35	Q	12000	10800	9600	8400	7200	6000	4800	3600	3000	3000
	W	4290	3470	2720	2090	1590	1200	910	690	600	600
30	Q	12580	11320	10060	8810	7550	6290	5040	3770	3140	3140
	W	3890	3150	2470	1900	1440	1090	830	630	540	540
25	Q	13050	11750	10450	9140	7830	6530	5230	3920	3260	3260
	W	3540	2860	2240	1730	1310	990	750	570	500	500
20	Q	13410	12070	10730	9390	8050	6700	5370	4020	3350	3350
	W	3200	2590	2030	1560	1180	890	680	510	450	450

Heating

Outdoor temperature(ºC)		Load(%)									
		100	**90**	**80**	**70**	**60**	**50**	**40**	**30**	**20**	**10**
15	Q	15570	14010	12460	10900	9340	7780	6230	4670	3590	3590
	W	3800	3190	2650	2180	1770	1390	1080	810	660	660
10	Q	14150	12730	11320	9900	8490	7070	5660	4240	3260	3260
	W	3610	3040	2530	2080	1680	1330	1020	770	630	630
7	Q	13000	11700	10400	9100	7800	6500	5200	3900	3000	3000
	W	3460	2910	2420	1990	1610	1270	980	740	600	600
5	Q	10010	9010	8010	7010	6010	5010	4010	3000	2310	2310
	W	2970	2500	2080	1710	1380	1090	840	640	520	520
2	Q	9790	8810	7830	6850	5870	4900	3920	2940	2260	2260
	W	2930	2460	2050	1690	1360	1080	830	630	510	510
0	Q	9650	8680	7720	6750	5790	4820	3860	2890	2230	2230
	W	2900	2440	2030	1670	1350	1060	820	620	500	500
-5	Q	9300	8370	7440	6510	5580	4650	3720	2790	2150	2150
	W	2830	2380	1980	1630	1320	1040	800	610	490	490
-7	Q	9160	8240	7330	6410	5500	4580	3660	2750	2110	2110
	W	2800	2350	1960	1610	1300	1030	790	600	490	490
-10	Q	8460	7610	6770	5920	5080	4230	3380	2540	1950	1950
	W	2700	2270	1890	1550	1250	990	760	580	470	470
-15	Q	6500	5850	5200	4550	3900	3250	2600	1950	1500	1500
	W	2410	2030	1690	1390	1120	890	680	520	420	420

Combination

Indoor unit : RAV-HM561UTP-E/TR x 2 (Twin System)

Outdoor unit : RAV-GM1101ATP-E/TR, RAV-GM1101ATJP-E

	Cooling		Heating	
	Capacity(W)	Power consumption (W)	Capacity(W)	Power consumption (W)
MINIMUM	3000	600	3000	600
RATING	9500	2870	11200	2930

Q: Capacity in W
W: Power Consumption in W

Cooling

Outdoor temperature(ºC)		Load(%)									
		100	**90**	**80**	**70**	**60**	**50**	**40**	**30**	**20**	**10**
40	Q	9000	8100	7200	6300	5400	4500	3600	2840	2840	2840
	W	3120	2490	2020	1630	1300	1010	790	650	650	650
35	Q	9500	8550	7600	6650	5700	4750	3800	3000	3000	3000
	W	2870	2290	1860	1500	1200	930	730	600	600	600
30	Q	9960	8960	7960	6970	5970	4980	3980	3140	3140	3140
	W	2600	2080	1690	1360	1090	840	660	540	540	540
25	Q	10340	9300	8270	7240	6200	5170	4130	3260	3260	3260
	W	2370	1890	1530	1240	990	770	600	490	490	490
20	Q	10610	9550	8490	7430	6370	5310	4240	3350	3350	3350
	W	2140	1710	1390	1120	890	690	540	450	450	450

Heating

Outdoor temperature(ºC)		Load(%)									
		100	**90**	**80**	**70**	**60**	**50**	**40**	**30**	**20**	**10**
15	Q	13410	12060	10730	9390	8050	6700	5360	4010	3590	3590
	W	3220	2760	2320	1890	1510	1190	920	710	660	660
10	Q	12190	10950	9750	8530	7310	6090	4870	3640	3260	3260
	W	3060	2630	2210	1800	1440	1130	870	680	630	630
7	Q	11200	10080	8960	7840	6720	5600	4480	3360	3000	3000
	W	2930	2520	2120	1730	1380	1080	840	650	600	600
5	Q	8630	7760	6900	6040	5180	4310	3450	2580	2310	2310
	W	2510	2160	1820	1480	1180	930	720	560	520	520
2	Q	8440	7580	6750	5900	5060	4210	3370	2520	2260	2260
	W	2480	2130	1790	1460	1170	910	710	550	510	510
0	Q	8310	7470	6650	5820	4990	4150	3320	2490	2230	2230
	W	2460	2110	1770	1450	1160	910	700	550	500	500
-5	Q	8010	7200	6410	5610	4810	4000	3200	2400	2150	2150
	W	2400	2060	1730	1410	1130	880	680	530	490	490
-7	Q	7890	7090	6310	5520	4730	3940	3150	2360	2110	2110
	W	2370	2040	1710	1400	1120	880	680	530	490	490
-10	Q	7280	6550	5830	5100	4370	3640	2910	2180	1950	1950
	W	2290	1970	1650	1350	1080	840	650	510	470	470
-15	Q	5600	5040	4480	3920	3360	2800	2240	1680	1500	1500
	W	2040	1760	1480	1200	960	750	580	450	420	420

Combination

Indoor unit : RAV-HM801UTP-E/TR x 2 (Twin System)

Outdoor unit : RAV-GM1401ATP-E/TR, RAV-GM1401ATJP-E

	Cooling		Heating	
	Capacity(W)	Power consumption (W)	Capacity(W)	Power consumption (W)
MINIMUM	3000	600	3000	600
RATING	12000	4290	13000	3460

Q: Capacity in W
W: Power Consumption in W

Cooling

Outdoor temperature(ºC)		Load(%)									
		100	**90**	**80**	**70**	**60**	**50**	**40**	**30**	**20**	**10**
40	Q	11370	10230	9100	7960	6820	5680	4550	3410	2840	2840
	W	4670	3770	2960	2270	1730	1300	990	750	650	650
35	Q	12000	10800	9600	8400	7200	6000	4800	3600	3000	3000
	W	4290	3470	2720	2090	1590	1200	910	690	600	600
30	Q	12580	11320	10060	8810	7550	6290	5040	3770	3140	3140
	W	3890	3150	2470	1900	1440	1090	830	630	540	540
25	Q	13050	11750	10450	9140	7830	6530	5230	3920	3260	3260
	W	3540	2860	2240	1730	1310	990	750	570	500	500
20	Q	13410	12070	10730	9390	8050	6700	5370	4020	3350	3350
	W	3200	2590	2030	1560	1180	890	680	510	450	450

Heating

Outdoor temperature(ºC)		Load(%)									
		100	**90**	**80**	**70**	**60**	**50**	**40**	**30**	**20**	**10**
15	Q	15570	14010	12460	10900	9340	7780	6230	4670	3590	3590
	W	3800	3190	2650	2180	1770	1390	1080	810	660	660
10	Q	14150	12730	11320	9900	8490	7070	5660	4240	3260	3260
	W	3610	3040	2530	2080	1680	1330	1020	770	630	630
7	Q	13000	11700	10400	9100	7800	6500	5200	3900	3000	3000
	W	3460	2910	2420	1990	1610	1270	980	740	600	600
5	Q	10010	9010	8010	7010	6010	5010	4010	3000	2310	2310
	W	2970	2500	2080	1710	1380	1090	840	640	520	520
2	Q	9790	8810	7830	6850	5870	4900	3920	2940	2260	2260
	W	2930	2460	2050	1690	1360	1080	830	630	510	510
0	Q	9650	8680	7720	6750	5790	4820	3860	2890	2230	2230
	W	2900	2440	2030	1670	1350	1060	820	620	500	500
-5	Q	9300	8370	7440	6510	5580	4650	3720	2790	2150	2150
	W	2830	2380	1980	1630	1320	1040	800	610	490	490
-7	Q	9160	8240	7330	6410	5500	4580	3660	2750	2110	2110
	W	2800	2350	1960	1610	1300	1030	790	600	490	490
-10	Q	8460	7610	6770	5920	5080	4230	3380	2540	1950	1950
	W	2700	2270	1890	1550	1250	990	760	580	470	470
-15	Q	6500	5850	5200	4550	3900	3250	2600	1950	1500	1500
	W	2410	2030	1690	1390	1120	890	680	520	420	420

2-1-6. Air Throw Distance Chart

RAV-HM561UTP-E/TR

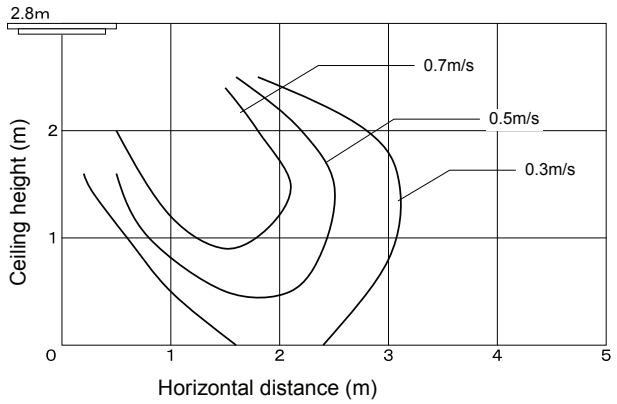

RAV-HM801UTP-E/TR

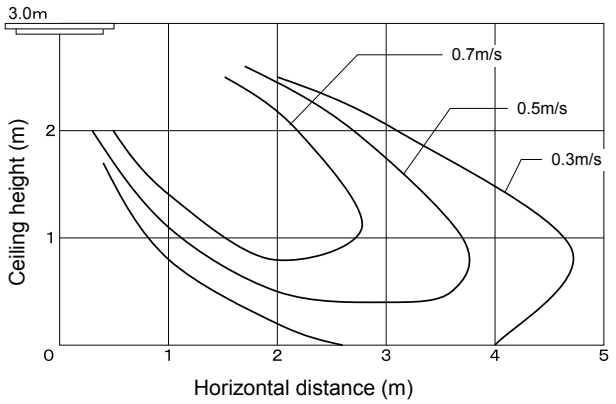

RAV-HM1101UTP-E/TR

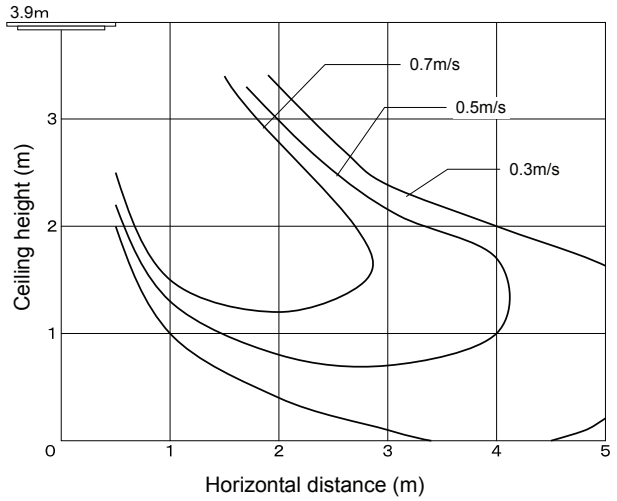

RAV-HM1401UTP-E/TR

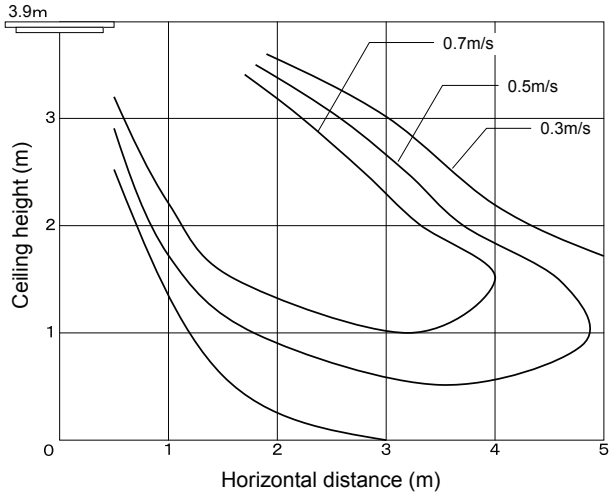

RAV-HM1101UTP-E/TR, RAV-HM1401UTP-E/TR (High ceiling)

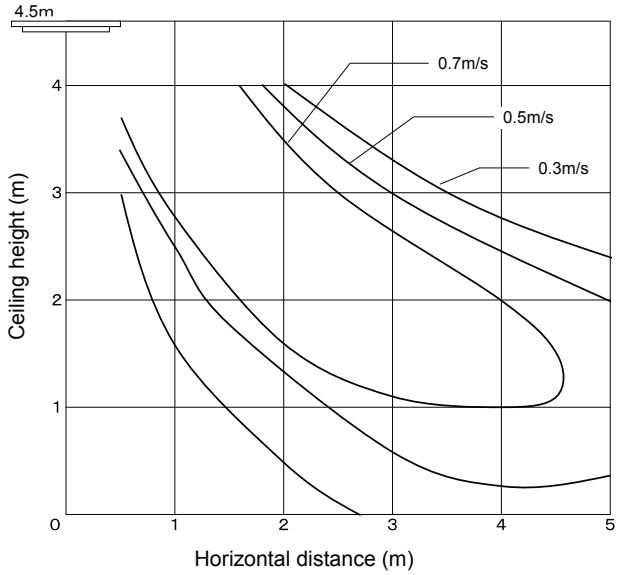

2-1-7. Sound characteristics (NC curve)

RAV-HM561UTP-E/TR

Fan tap	H	M	L
Sound pressure level (dB(A))	32	29	28

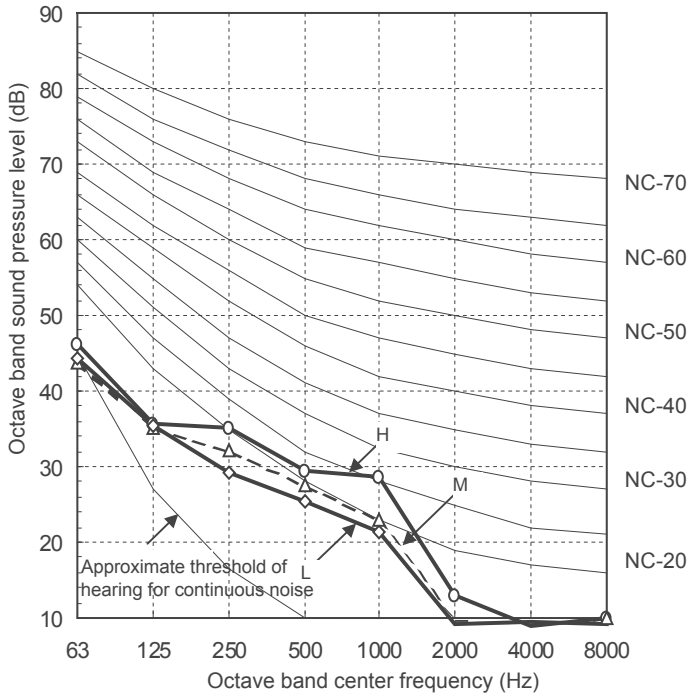

RAV-HM801UTP-E/TR

Fan tap	H	M	L
Sound pressure level (dB(A))	35	31	28

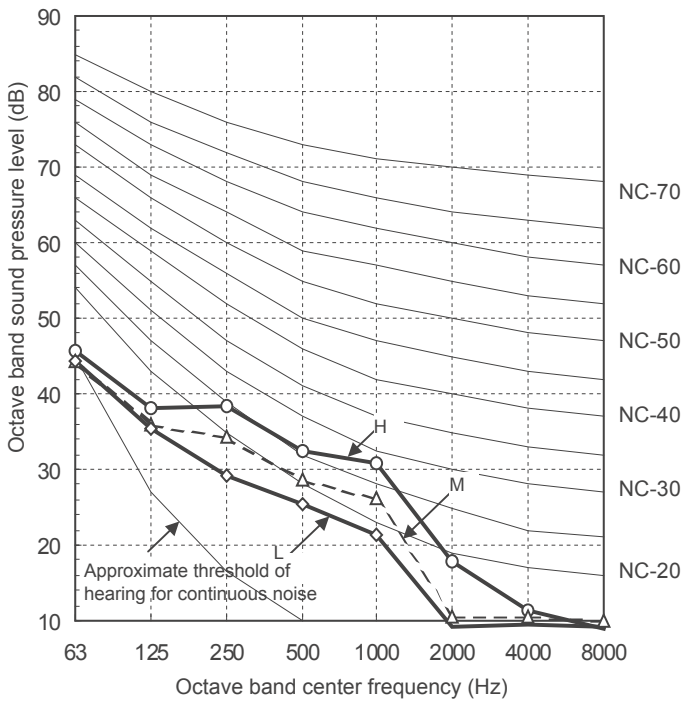

RAV-HM1101UTP-E/TR

Fan tap	H	M	L
Sound pressure level (dB(A))	43	38	33

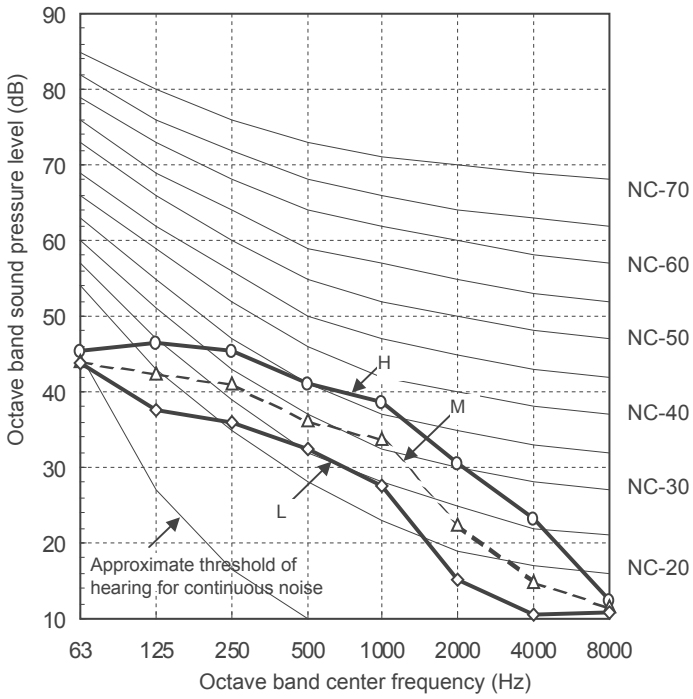

RAV-HM1401UTP-E/TR

Fan tap	H	M	L
Sound pressure level (dB(A))	44	38	34

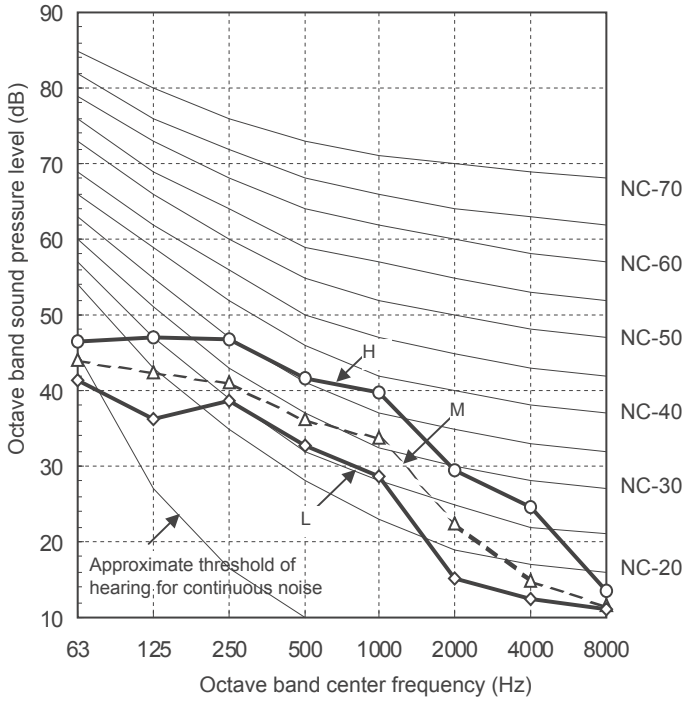

2-1-8. Accessories

Optional parts for 4-Way Cassette type

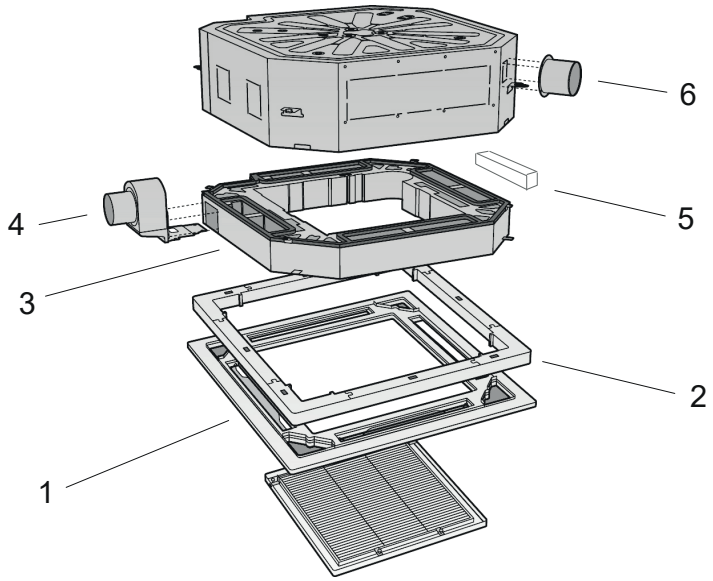

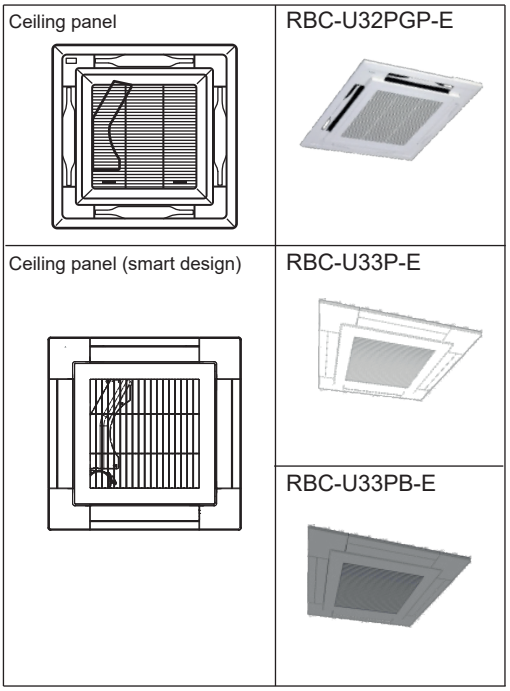

Optional parts list

No		Type	Model name	Qty/unit	Note
1	1.1	Ceiling panel	RBC-U32PGP-E	1	White (2.5GY9.0/0.5)
	1.2	Ceiling panel (Smart design)	RBC-U33P-E	1	White (5PB9/1)
	1.3	Ceiling panel (Smart design)	RBC-U33PB-E	1	Black (RAL9005)
2		Spacer for height adjustment	TCB-SP1602UE	1	50 mm
3		Fresh-air chamber	TCB-GFC1602UE	1	Use with TCB-GB1602UUL
4		Fresh-air inlet box	TCB-GB1602UE	1	Connection = Dia. 100 mm.
5		Air-discharge direction kit	TCB-BC1602UE	1	6-direction patterns
6		Auxiliary fresh air flange	TCB-FF101URE2		Connection = Dia.100

Appendix

1. Fresh-air chamber (TCB-GFC1602UE)

Unit : mm

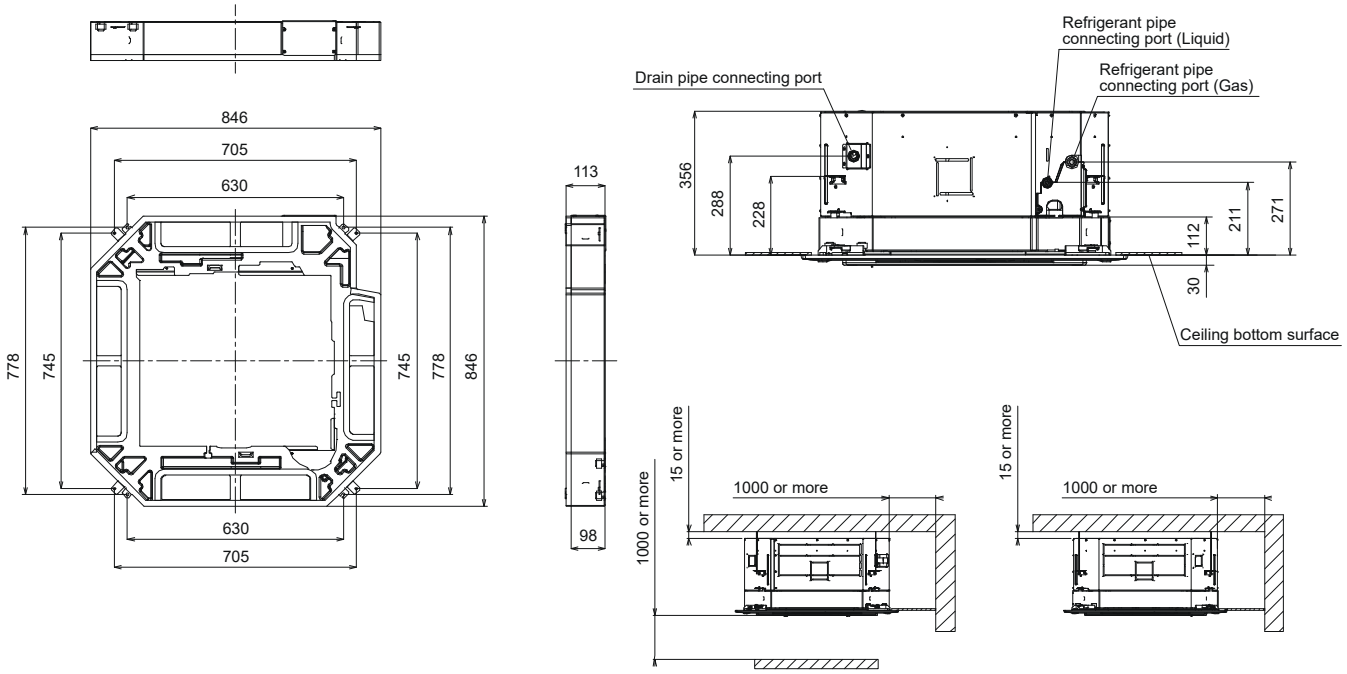

Space required for installation

2. Fresh-air inlet box (TCB-GB1602UE)

Accessories

(The following parts are included.)

No.	Name	Qty	Remark
(1)	Outside air introduction port	1	
(2)	Outside air introduction port fixing metal part	1	
(3)	Duct flange 100 mm	1	
(4)	Mounting screws 4 × 10 mm	16	
(5)	Heat insulating material A	2	
(6)	Heat insulating material B	2	
(7)	Wind shield	1	
(8)	Installation manual	1	
(9)	Wire	1	

Installation

(Fig. 1)

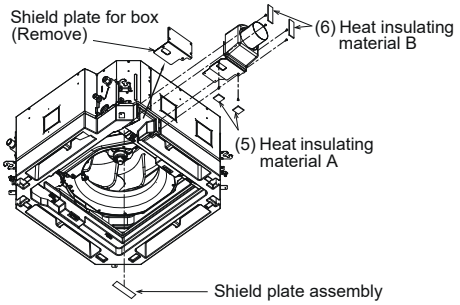

(Fig. 2)

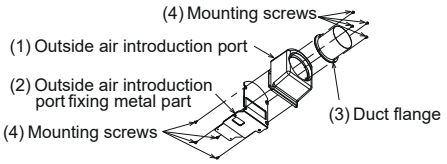

(Fig. 3)

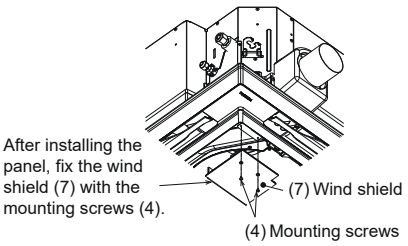

Dimension

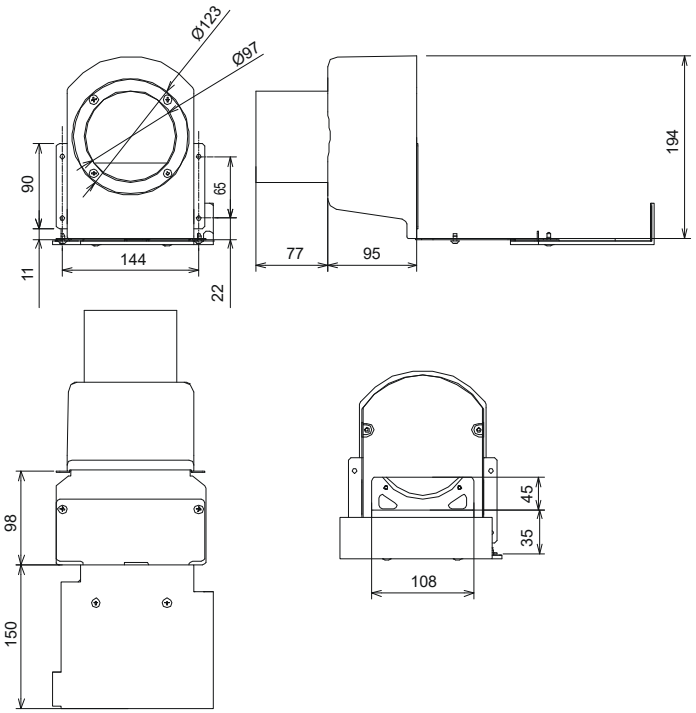

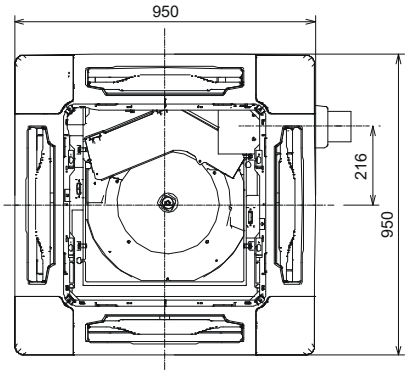

Unit: mm

NOTE

This inlet box shall be used with the fresh-air chamber.

3. Auxiliary fresh air flange (TCB-FF101URE2)

Installation

1. Using the knockout of the indoor unit main body, as a marker, cut off the flange with the heat insulator (styrol) with cutting pliers or cutter.

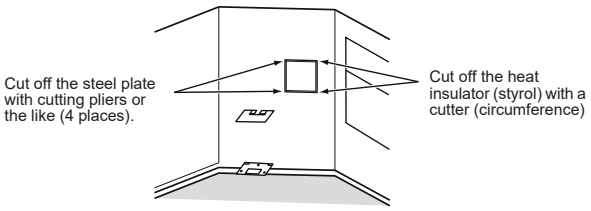

NOTE

When cutting off the styrol inside, be careful not to insert the cutter blade deeper than 30 mm. (Damage to the drain pan inside can cause water leakage.)
Wear safety globes to carry out these works. Do not attempt with bare hands.

2. A gap between the styrol and steel plate may cause a trouble such as condensation. Be sure to attach the attached heat insulator A first with it aligned to the screw hole, and then attach B, according to the right figure.
3. Install the auxiliary fresh air flange to the indoor unit main body with attached 4 fixing screws.

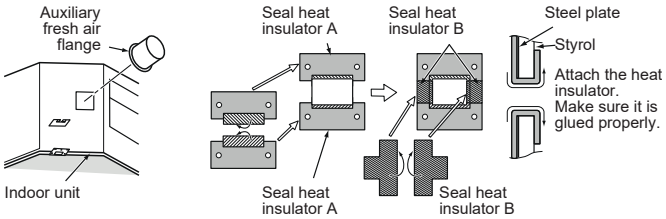

Duct fan

In order to take fresh air, provide the duct fan separately.

1. Install the filter for fresh air
2. Provide the check port beneath the duct fan for maintenance.
3. Provide the silencer to prevent the effect of noise.

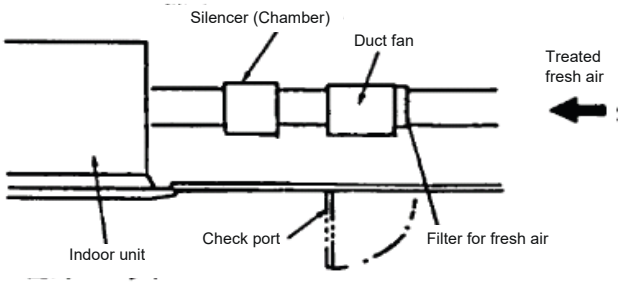

Dimension

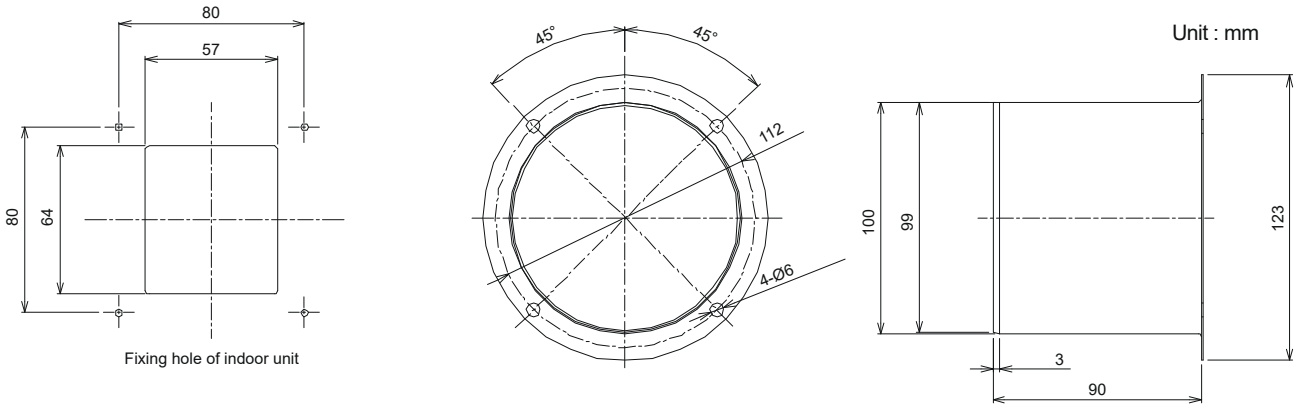

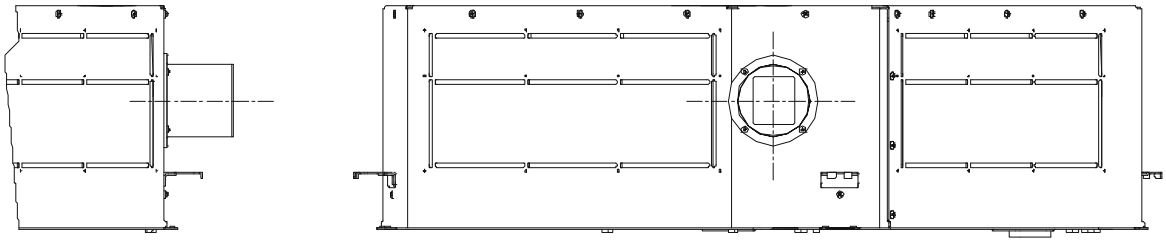

Installation status of indoor unit

4. Fresh Air Intake

Usage

Fresh air is taken by using Fresh-air chamber and Fresh-air inlet box. And also is subsidiarily taken by using Auxiliary fresh air flange through the knock-out hole of the indoor unit body.

Caution

1. Be sure to provide air return.
2. The fresh air shall be treated by heat reclaim ventilator or the like.
3. Recommended treated air temperature is 12 °C to 30 °C.
4. Be sure to decide the fresh air volume so that mixed suction air with fresh air keep operating temperature. Provide an air filter in fresh air way to prevent sucking dust.
5. Be sure to insulate the fresh air duct.
   In order to accelerate starting up in heating mode, implement pre-heating operation by cutting off Fresh Air Intake.
6. The operating sound might increase when fresh air intake.

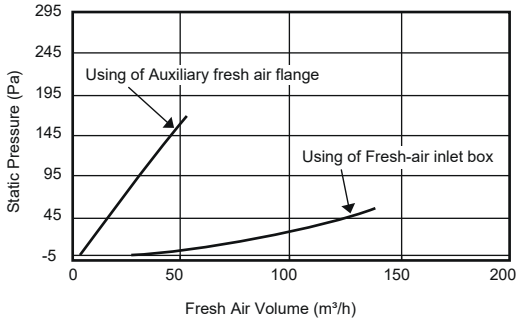

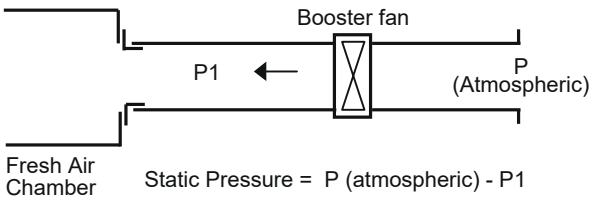

Characteristics between air volume of branching duct and static pressure

Following fresh air intake ratio is available by using the booster fan.

1. Fresh-air inlet box with Fresh-air chamber.
   By using duct fan (local procurement), it is available to inlet up to 110 m³/h and 5% of rated air volume.
2. Auxiliary fresh air flange through the knock-out hole of the indoor unit body.
   By using duct fan (local procurement), it is available to inlet up to 30 m³/h and 2% of rated air volume.

5. Spacer for height adjustment (TCB-SP1602UE)

Unit : mm

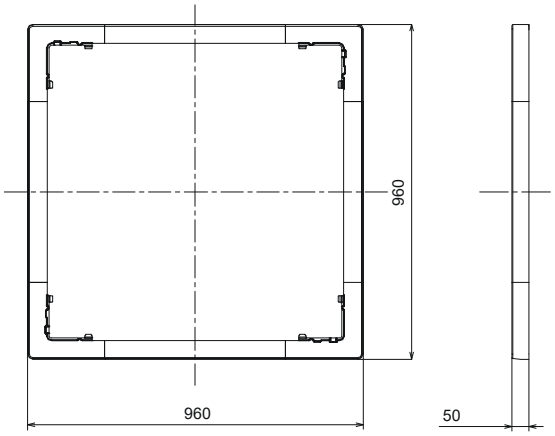

Material : Styrene foam
Color : Moon white

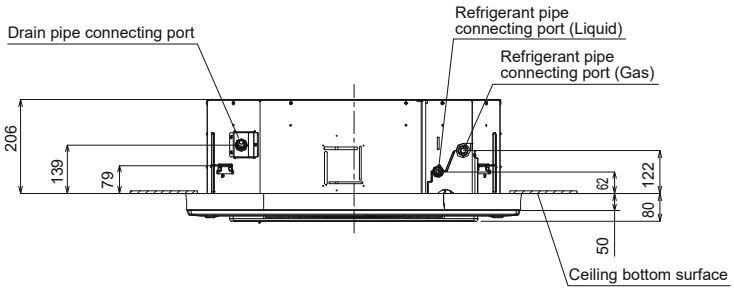

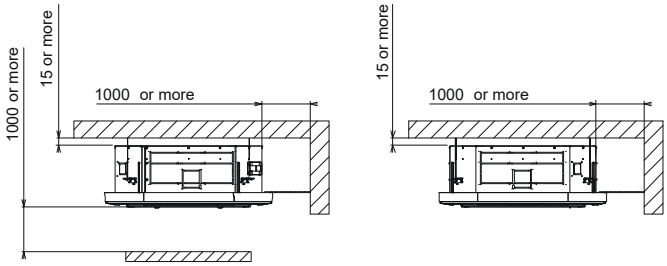

Space required for installation

6. Air discharge direction kit (TCB-BC1602UE)

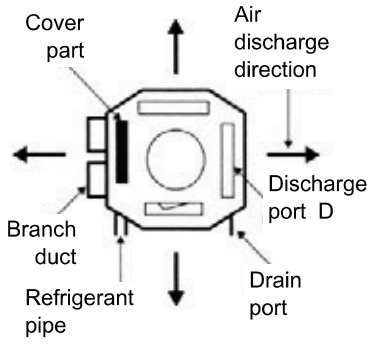

			Limited models only	
3-way air flow	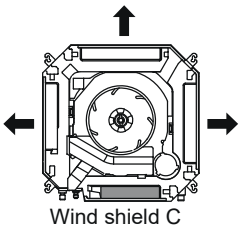	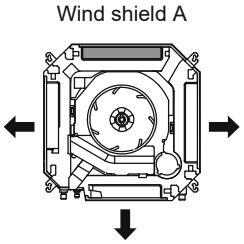	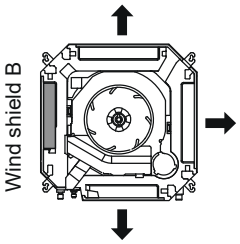	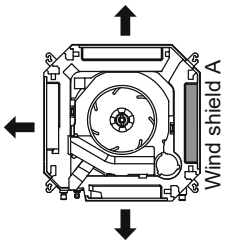
	Available for all models	Available for all models	Available only for 56 to 80 type	Available only for 110 to 160 type
2-way air flow	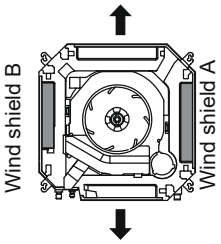	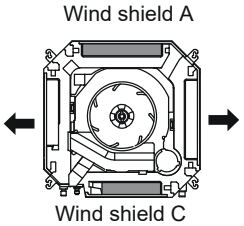	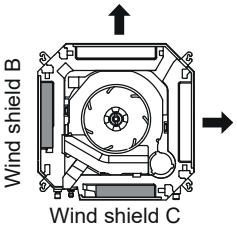	
	Available for all models	Available for all models	Available for all models	

2-2. Compact 4-way Cassette Type

2-2-1. Specifications

2-2-2. Dimension

2-2-3. Wiring Diagrams

2-2-4. Sensible Capacity Table

2-2-5. Part Load Performance

2-2-6. Air Throw Distance Chart

2-2-7. Sound Characteristics (NC Curve)

2-2-8 Accessories

2-2-1. Specifications

Compact 4-way Cassette Type <Single Type>

Model		Indoor unit		RAV- HM301MUTP-E	RAV- HM401MUTP-E	RAV-HM561MUTP-E/TR
		Outdoor unit (RAV-GM***ATJP-E)		RAV-GM301ATP-E	RAV-GM401ATP-E	RAV-GM561ATP-E1/TR1
Cooling capacity			(kW)	2.5 < 0.9-3.0 >	3.6 < 0.9-4.0 >	5.0 < 1.5 - 5.6 >
Heating capacity			(kW)	3.4 < 0.8-4.5 >	4.0 < 0.8-5.0 >	5.3 < 1.5 - 6.3 >
Power supply				1 phase 220V-240V/50Hz, 1phase 220V/60Hz		
Electrical characteristics	Cooling	Running current	(A)	2.98-2.73	4.40-4.03	7.93-7.27
		Power consumption	(kW)	0.59	0.90	1.64
		Power factor	(%)	90	93	94
		EER		4.24	4.00	3.05
		SEER		5.94	5.76	5.69
	Heating	Running current	(A)	3.75-3.44	4.64-4.26	7.12 - 6.53
		Power consumption	(kW)	0.76	0.95	1.47
		Power factor	(%)	92	93	93
		COP		4.47	4.21	3.61
		SCOP		4.70	4.44	4.37
	Maximum current		(A)	7.9	9.2	15.5
Indoor unit						
Appearance	Main unit			Zinc hot dipping steel plate *Heat-insulating material attaced to only upper plate		
	Ceiling panel (Sold separately)	Model		RBC-UM21P-E , RBC-UM21PB-E		
		Panel color		Gran White (Mansell 5PB9/1) , Black 3C		
Outer dimension	Main unit	Height	(mm)	256	256	256
		Width	(mm)	575	575	575
		Depth	(mm)	575	575	575
	Ceiling panel (Sold separately)	Height	(mm)	12	12	12
		Width	(mm)	620	620	620
		Depth	(mm)	620	620	620
Total weight	Main unit		(kg)	15.0	15.0	15.0
	Ceiling panel (Sold separately)		(kg)	3.0	3.0	3.0
Fan unit	Fan			Turbo fan		
	Standard air flow	H/M+/M//L+/L	(m3/h)	640/574/520/450/440	660/610/552/480/468	798/720/672/562/546
	Motor		(W)	60		
Air filter				Standard filter (Long life filter)		
Sound pressure level		H/M+/M/L+/L	(dB)	38/37/36/31/30	41/38/36/33/32	44/42/39/36/35
Sound power level		H/M+/M//L+/L	(dB)	53/52/51/46/45	56/53/51/48/47	59/57/54/51/50
Connecting pipe	Drain port			VP25		

Note :
Rated conditions Cooling : Indoor air temperature 27°C DB/19°C WB, Outdoor air temperature 35°C DB
Heating : Indoor air temperature 20°C DB, Outdoor air temperature 7°C DB/6°C WB

Compact 4-way Cassette (Twin System)

Model		**Indoor unit 1**		**RAV-HM561MUTP-E/TR**
		Indoor unit 2		**RAV-HM561MUTP-E/TR**
		Outdoor unit (RAV-GM***ATJP-E)		**RAV-GM1101ATP-E/TR**
Cooling capacity			(kW)	9.5 < 3.0 - 11.2 >
Heating capacity			(kW)	11.2 < 3.0 - 13.0 >
Power supply				1 phase 220V-240V/50Hz, 1phase 220V/60Hz
Electrical characteristics	Cooling	Running current	(A)	14.55-13.30
		Power consumption	(kW)	3.00
		Power factor	(%)	94
		EER		3.17
		SEER		5.50
	Heating	Running current	(A)	15.44 - 14.15
		Power consumption	(kW)	3.26
		Power factor	(%)	96
		COP		3.44
		SCOP		4.02
	Maximum current		(A)	22.8
Indoor unit				
Appearance	Main unit			Zinc hot dipping steel plate
	Ceiling panel (Sold separately)	Model		RBC-UM21P-E, RBC-UM21PB-E
		Panel color		Gran White (Mansell 5PB9/1) , Black 3 C
Outer dimension	Main unit	Height	(mm)	256
		Width	(mm)	575
		Depth	(mm)	575
	Ceiling panel (Sold separately)	Height	(mm)	12
		Width	(mm)	620
		Depth	(mm)	620
Total weight	Main unit		(kg)	15
	Ceiling panel (Sold separately)		(kg)	3
Fan unit	Fan			Turbo fan
	Standard air flow	H/M+/M/L+/L	(m3/h)	798/720/672/562/546
	Motor		(W)	60
Air filter				Standard filter (Long life filter)
Sound pressure level		H/M+/M/L+/L	(dB)	44/42/39/36/35
Sound power level		H/M+/M/L+/L	(dB)	59/57/54/51/50
Connecting pipe	Drain port			VP25

Note :
Rated conditions Cooling : Indoor air temperature 27°C DB/19°C WB, Outdoor air temperature 35°C DB
Heating : Indoor air temperature 20°C DB, Outdoor air temperature 7°C DB/6°C WB

2-2-2. Dimension

RAV-HM*__1MUTP-E (*30,40,56) , RAV-HM561MUTP-TR

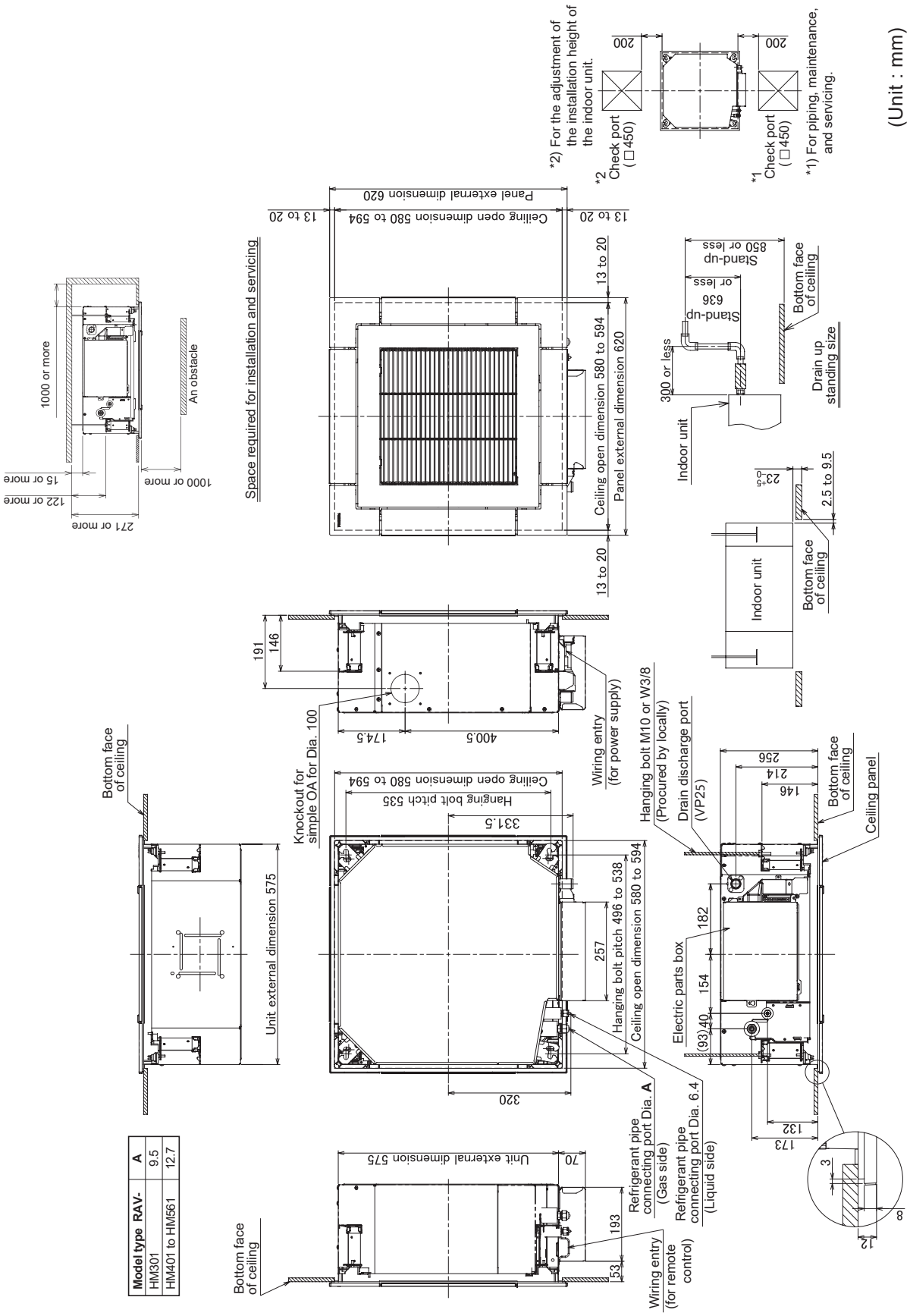

Model type RAV-	A
HM301	9.5
HM401 to HM561	12.7

2-2-3. Wiring Diagrams

RAV-HM*__1MUTP-E (*30,40,56) , RAV-HM561MUTP-TR

COLOR INDICATION
RED: RED
WHI: WHITE
YEL: YELLOW
BLU: BLUE
BLK: BLACK

Symbol	Parts Name
CN***	Connector
DM	Drain Pump Motor
F01	Fuse
FM	Fan Motor
FS	Float Switch
LM1,2,3,4	Louver Motor
SW501	Dip Switch
TA	Indoor temp sensor
TB01,02	Terminal Block
TC,TCJ	Temp sensor

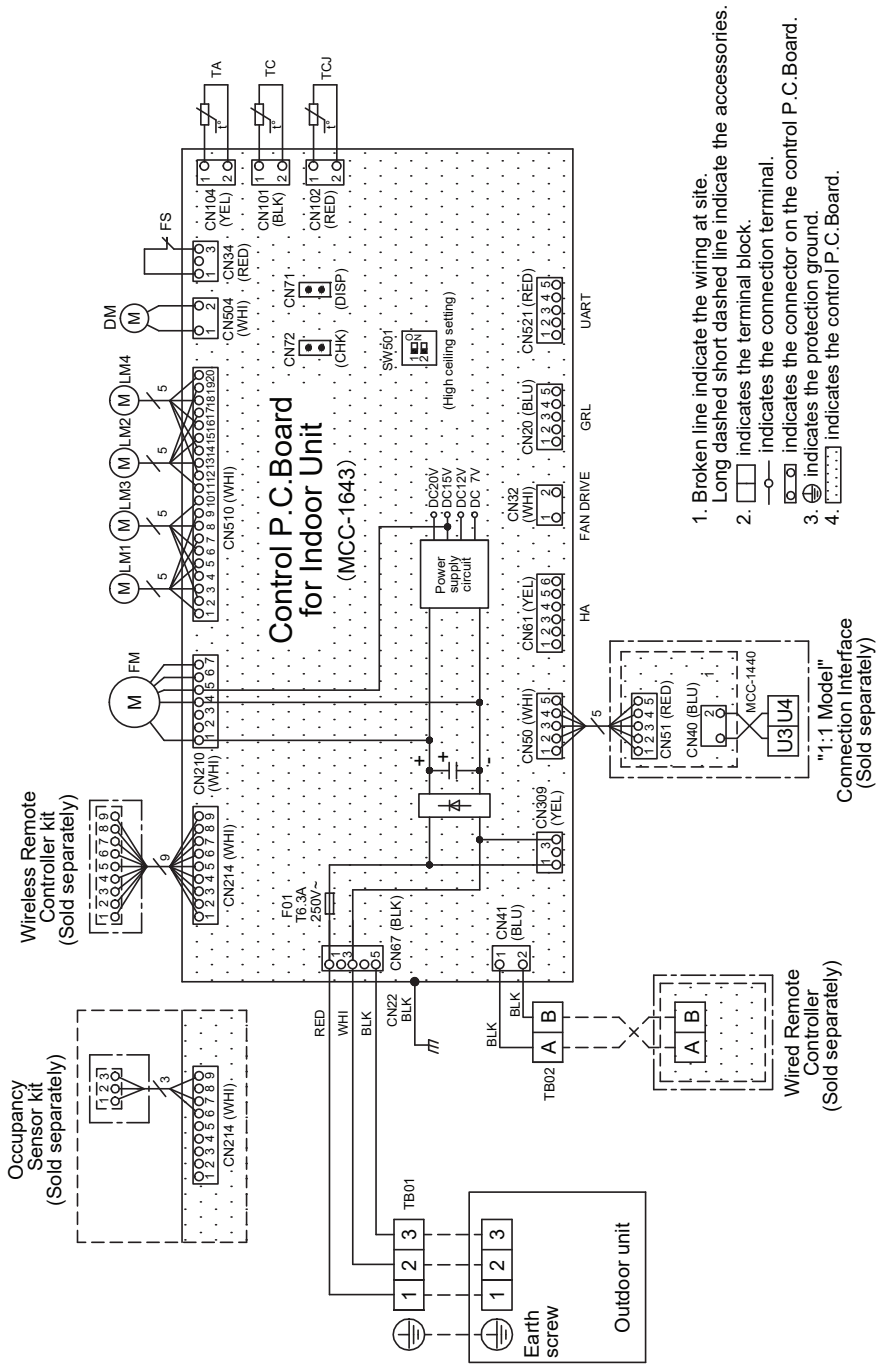

2-2-4. Sensible Capacity Table

Digital Inverter R32 Sensible Heat Capacity : RAV-HM301MUTP-E ; RAV-GM301AT(J)P-E

Specification of product at standard condition

Standard Condition		
	Indoor	27°C (DB) / 19°C (WB)
	Outdoor	35°C (DB) / 24°C (WB)

Total Cooling Capacity (TC)	2.50	kW
Sensible Heat Capacity (SHC)	1.95	kW

Outdoor air temperature	Indoor air temperature													
	20.0°C (DB) 14.0°C (WB)		23.0°C (DB) 16.0°C (WB)		26.0°C (DB) 18.0°C (WB)		27.0°C (DB) 19.0°C (WB)		28.0°C (DB) 20.0°C (WB)		30.0°C (DB) 22.0°C (WB)		32.0°C (DB) 24.0°C (WB)	
DB (°C)	TC	SHC	TC	SHC	TC	SHC	TC	SHC	TC	SHC	TC	SHC	TC	SHC
10	2.71	2.28	3.00	2.43	3.21	2.58	3.30	2.58	3.40	2.57	3.60	2.54	3.76	2.49
11	2.69	2.26	2.97	2.41	3.18	2.56	3.27	2.55	3.36	2.55	3.56	2.52	3.73	2.47
12	2.66	2.24	2.94	2.38	3.15	2.53	3.24	2.53	3.33	2.52	3.53	2.49	3.69	2.44
13	2.63	2.21	2.91	2.36	3.11	2.51	3.21	2.50	3.30	2.50	3.49	2.47	3.65	2.42
14	2.61	2.19	2.88	2.33	3.08	2.48	3.17	2.48	3.26	2.47	3.46	2.44	3.62	2.39
15	2.58	2.17	2.85	2.31	3.05	2.46	3.14	2.45	3.23	2.45	3.42	2.42	3.58	2.37
16	2.55	2.15	2.82	2.29	3.02	2.43	3.11	2.43	3.20	2.42	3.39	2.40	3.54	2.34
17	2.53	2.13	2.79	2.26	2.99	2.41	3.08	2.40	3.17	2.40	3.35	2.37	3.51	2.32
18	2.50	2.10	2.76	2.24	2.96	2.38	3.05	2.38	3.13	2.37	3.32	2.35	3.47	2.30
19	2.48	2.08	2.73	2.22	2.93	2.36	3.01	2.35	3.10	2.35	3.28	2.32	3.43	2.27
20	2.45	2.06	2.70	2.19	2.90	2.33	2.98	2.33	3.07	2.32	3.25	2.30	3.40	2.25
21	2.42	2.04	2.68	2.17	2.86	2.31	2.95	2.30	3.03	2.30	3.21	2.27	3.36	2.22
22	2.40	2.01	2.65	2.15	2.83	2.28	2.92	2.28	3.00	2.27	3.18	2.25	3.32	2.20
23	2.37	1.99	2.62	2.12	2.80	2.26	2.89	2.25	2.97	2.25	3.14	2.22	3.29	2.18
24	2.34	1.97	2.59	2.10	2.77	2.23	2.85	2.23	2.93	2.22	3.11	2.20	3.25	2.15
25	2.32	1.95	2.56	2.08	2.74	2.21	2.82	2.20	2.90	2.20	3.07	2.17	3.21	2.13
26	2.29	1.93	2.53	2.05	2.71	2.18	2.79	2.18	2.87	2.17	3.04	2.15	3.18	2.10
27	2.26	1.90	2.50	2.03	2.68	2.16	2.76	2.15	2.84	2.15	3.00	2.12	3.14	2.08
28	2.24	1.88	2.47	2.00	2.65	2.13	2.72	2.13	2.80	2.12	2.97	2.10	3.10	2.05
29	2.21	1.86	2.44	1.98	2.62	2.11	2.69	2.10	2.77	2.10	2.93	2.07	3.07	2.03
30	2.19	1.84	2.41	1.96	2.58	2.08	2.66	2.08	2.74	2.07	2.90	2.05	3.03	2.01
31	2.16	1.82	2.38	1.93	2.55	2.06	2.63	2.05	2.70	2.05	2.86	2.02	2.99	1.98
32	2.13	1.79	2.36	1.91	2.52	2.03	2.60	2.03	2.67	2.02	2.83	2.00	2.96	1.96
33	2.11	1.77	2.33	1.89	2.49	2.01	2.56	2.00	2.64	2.00	2.79	1.98	2.92	1.93
34	2.08	1.75	2.30	1.86	2.46	1.98	2.53	1.98	2.60	1.97	2.76	1.95	2.88	1.91
35	**2.05**	**1.73**	**2.27**	**1.84**	**2.43**	**1.95**	**2.50**	**1.95**	**2.57**	**1.95**	**2.72**	**1.93**	**2.85**	**1.89**
36	2.03	1.70	2.24	1.82	2.40	1.93	2.47	1.92	2.54	1.92	2.69	1.90	2.81	1.86
37	2.00	1.68	2.21	1.79	2.37	1.90	2.44	1.90	2.51	1.90	2.65	1.88	2.78	1.84
38	1.97	1.66	2.18	1.77	2.34	1.88	2.40	1.87	2.47	1.87	2.62	1.85	2.74	1.81
39	1.95	1.64	2.15	1.74	2.30	1.85	2.37	1.85	2.44	1.85	2.58	1.83	2.70	1.79
40	1.92	1.62	2.12	1.72	2.27	1.83	2.34	1.82	2.41	1.82	2.55	1.80	2.67	1.76
41	1.90	1.59	2.09	1.70	2.24	1.80	2.31	1.80	2.37	1.80	2.51	1.78	2.63	1.74
42	1.87	1.57	2.06	1.67	2.21	1.78	2.28	1.77	2.34	1.77	2.48	1.75	2.59	1.72
43	1.84	1.55	2.03	1.65	2.18	1.75	2.24	1.75	2.31	1.75	2.44	1.73	2.56	1.69
44	1.82	1.53	2.01	1.63	2.15	1.73	2.21	1.72	2.27	1.72	2.41	1.70	2.52	1.67
45	1.79	1.51	1.98	1.60	2.12	1.70	2.18	1.70	2.24	1.70	2.37	1.68	2.48	1.64
46	1.76	1.48	1.95	1.58	2.09	1.68	2.15	1.67	2.21	1.67	2.34	1.65	2.45	1.62

TC:Total Capacity [kW]
SHC:Sensible Heat Capacity [kW]

Product models : RAV-HM401MUTP-E ; RAV-GM401AT(J)P-E

Specification of product at standard condition

Standard Condition		
	Indoor	27°C (DB) / 19°C (WB)
	Outdoor	35°C (DB) / 24°C (WB)

Total Cooling Capacity (TC)	3.60	kW
Sensible Heat Capacity (SHC)	2.80	kW

Outdoor air temperature	Indoor air temperature													
	20.0°C (DB) 14.0°C (WB)		23.0°C (DB) 16.0°C (WB)		26.0°C (DB) 18.0°C (WB)		27.0°C (DB) 19.0°C (WB)		28.0°C (DB) 20.0°C (WB)		30.0°C (DB) 22.0°C (WB)		32.0°C (DB) 24.0°C (WB)	
DB (°C)	TC	SHC	TC	SHC	TC	SHC	TC	SHC	TC	SHC	TC	SHC	TC	SHC
10	3.91	3.28	4.31	3.49	4.62	3.71	4.76	3.70	4.89	3.69	5.18	3.65	5.42	3.57
11	3.87	3.24	4.27	3.45	4.57	3.67	4.71	3.66	4.84	3.66	5.13	3.62	5.36	3.54
12	3.83	3.21	4.23	3.42	4.53	3.64	4.66	3.63	4.80	3.62	5.08	3.58	5.31	3.50
13	3.79	3.18	4.19	3.39	4.48	3.60	4.62	3.59	4.75	3.59	5.03	3.55	5.26	3.47
14	3.75	3.15	4.15	3.35	4.44	3.56	4.57	3.55	4.70	3.55	4.98	3.51	5.21	3.43
15	3.72	3.12	4.10	3.32	4.39	3.53	4.52	3.52	4.65	3.51	4.93	3.47	5.15	3.40
16	3.68	3.08	4.06	3.29	4.35	3.49	4.48	3.48	4.61	3.48	4.88	3.44	5.10	3.37
17	3.64	3.05	4.02	3.25	4.30	3.46	4.43	3.45	4.56	3.44	4.83	3.40	5.05	3.33
18	3.60	3.02	3.98	3.22	4.26	3.42	4.39	3.41	4.51	3.41	4.78	3.37	5.00	3.30
19	3.56	2.99	3.94	3.18	4.22	3.38	4.34	3.37	4.46	3.37	4.73	3.33	4.94	3.26
20	3.53	2.96	3.89	3.15	4.17	3.35	4.29	3.34	4.42	3.33	4.68	3.30	4.89	3.23
21	3.49	2.93	3.85	3.12	4.13	3.31	4.25	3.30	4.37	3.30	4.63	3.26	4.84	3.19
22	3.45	2.89	3.81	3.08	4.08	3.28	4.20	3.27	4.32	3.26	4.58	3.23	4.79	3.16
23	3.41	2.86	3.77	3.05	4.04	3.24	4.15	3.23	4.27	3.23	4.53	3.19	4.73	3.12
24	3.37	2.83	3.73	3.01	3.99	3.20	4.11	3.20	4.23	3.19	4.48	3.15	4.68	3.09
25	3.34	2.80	3.68	2.98	3.95	3.17	4.06	3.16	4.18	3.15	4.42	3.12	4.63	3.05
26	3.30	2.77	3.64	2.95	3.90	3.13	4.02	3.12	4.13	3.12	4.37	3.08	4.58	3.02
27	3.26	2.73	3.60	2.91	3.86	3.10	3.97	3.09	4.08	3.08	4.32	3.05	4.52	2.98
28	3.22	2.70	3.56	2.88	3.81	3.06	3.92	3.05	4.04	3.05	4.27	3.01	4.47	2.95
29	3.18	2.67	3.52	2.84	3.77	3.02	3.88	3.02	3.99	3.01	4.22	2.98	4.42	2.91
30	3.15	2.64	3.48	2.81	3.72	2.99	3.83	2.98	3.94	2.98	4.17	2.94	4.36	2.88
31	3.11	2.61	3.43	2.78	3.68	2.95	3.78	2.94	3.89	2.94	4.12	2.91	4.31	2.84
32	3.07	2.58	3.39	2.74	3.63	2.92	3.74	2.91	3.85	2.90	4.07	2.87	4.26	2.81
33	3.03	2.54	3.35	2.71	3.59	2.88	3.69	2.87	3.80	2.87	4.02	2.84	4.21	2.78
34	2.99	2.51	3.31	2.68	3.54	2.84	3.65	2.84	3.75	2.83	3.97	2.80	4.15	2.74
35	**2.96**	**2.48**	**3.27**	**2.64**	**3.50**	**2.81**	**3.60**	**2.80**	**3.70**	**2.80**	**3.92**	**2.76**	**4.10**	**2.71**
36	2.92	2.45	3.22	2.61	3.45	2.77	3.55	2.76	3.66	2.76	3.87	2.73	4.05	2.67
37	2.88	2.42	3.18	2.57	3.41	2.74	3.51	2.73	3.61	2.72	3.82	2.69	4.00	2.64
38	2.84	2.38	3.14	2.54	3.36	2.70	3.46	2.69	3.56	2.69	3.77	2.66	3.94	2.60
39	2.81	2.35	3.10	2.51	3.32	2.66	3.42	2.66	3.51	2.65	3.72	2.62	3.89	2.57
40	2.77	2.32	3.06	2.47	3.27	2.63	3.37	2.62	3.47	2.62	3.67	2.59	3.84	2.53
41	2.73	2.29	3.01	2.44	3.23	2.59	3.32	2.58	3.42	2.58	3.62	2.55	3.79	2.50
42	2.69	2.26	2.97	2.40	3.18	2.56	3.28	2.55	3.37	2.54	3.57	2.52	3.73	2.46
43	2.65	2.23	2.93	2.37	3.14	2.52	3.23	2.51	3.32	2.51	3.52	2.48	3.68	2.43
44	2.62	2.19	2.89	2.34	3.09	2.48	3.18	2.48	3.28	2.47	3.47	2.45	3.63	2.39
45	2.58	2.16	2.85	2.30	3.05	2.45	3.14	2.44	3.23	2.44	3.42	2.41	3.58	2.36
46	2.54	2.13	2.80	2.27	3.00	2.41	3.09	2.40	3.18	2.40	3.37	2.37	3.52	2.32

TC:Total Capacity [kW]
SHC:Sensible Heat Capacity [kW]

Product models : RAV-HM561MUTP-E/TR ; RAV-GM561ATP-E1/TR1, RAV-GM561ATJP-E1

Specification of product at standard condition

Standard Condition		
	Indoor	27°C (DB) / 19°C (WB)
	Outdoor	35°C (DB) / 24°C (WB)

Total Cooling Capacity (TC)	5.00	kW
Sensible Heat Capacity (SHC)	3.70	kW

Outdoor air temperature	Indoor air temperature													
	20.0°C (DB) 14.0°C (WB)		23.0°C (DB) 16.0°C (WB)		26.0°C (DB) 18.0°C (WB)		27.0°C (DB) 19.0°C (WB)		28.0°C (DB) 20.0°C (WB)		30.0°C (DB) 22.0°C (WB)		32.0°C (DB) 24.0°C (WB)	
DB (°C)	TC	SHC	TC	SHC	TC	SHC	TC	SHC	TC	SHC	TC	SHC	TC	SHC
10	5.42	4.34	5.99	4.62	6.42	4.91	6.60	4.89	6.79	4.87	7.19	4.80	7.52	4.68
11	5.37	4.30	5.93	4.57	6.35	4.86	6.54	4.84	6.73	4.83	7.12	4.75	7.45	4.63
12	5.32	4.26	5.87	4.53	6.29	4.81	6.48	4.79	6.66	4.78	7.05	4.71	7.38	4.59
13	5.27	4.22	5.82	4.48	6.23	4.76	6.41	4.74	6.60	4.73	6.98	4.66	7.30	4.54
14	5.21	4.18	5.76	4.44	6.17	4.72	6.35	4.70	6.53	4.68	6.91	4.61	7.23	4.50
15	5.16	4.13	5.70	4.39	6.10	4.67	6.28	4.65	6.46	4.64	6.84	4.57	7.16	4.45
16	5.11	4.09	5.64	4.35	6.04	4.62	6.22	4.60	6.40	4.59	6.77	4.52	7.09	4.41
17	5.06	4.05	5.58	4.30	5.98	4.57	6.16	4.55	6.33	4.54	6.70	4.47	7.01	4.36
18	5.00	4.01	5.52	4.26	5.92	4.53	6.09	4.51	6.27	4.49	6.63	4.43	6.94	4.32
19	4.95	3.96	5.47	4.21	5.85	4.48	6.03	4.46	6.20	4.45	6.56	4.38	6.87	4.27
20	4.90	3.92	5.41	4.17	5.79	4.43	5.96	4.41	6.13	4.40	6.49	4.33	6.79	4.22
21	4.84	3.88	5.35	4.13	5.73	4.38	5.90	4.36	6.07	4.35	6.43	4.29	6.72	4.18
22	4.79	3.84	5.29	4.08	5.67	4.34	5.83	4.32	6.00	4.30	6.36	4.24	6.65	4.13
23	4.74	3.80	5.23	4.04	5.60	4.29	5.77	4.27	5.94	4.26	6.29	4.19	6.57	4.09
24	4.69	3.75	5.18	3.99	5.54	4.24	5.71	4.22	5.87	4.21	6.22	4.15	6.50	4.04
25	4.63	3.71	5.12	3.95	5.48	4.19	5.64	4.17	5.80	4.16	6.15	4.10	6.43	4.00
26	4.58	3.67	5.06	3.90	5.42	4.14	5.58	4.13	5.74	4.12	6.08	4.05	6.35	3.95
27	4.53	3.63	5.00	3.86	5.36	4.10	5.51	4.08	5.67	4.07	6.01	4.01	6.28	3.91
28	4.48	3.58	4.94	3.81	5.29	4.05	5.45	4.03	5.61	4.02	5.94	3.96	6.21	3.86
29	4.42	3.54	4.88	3.77	5.23	4.00	5.39	3.98	5.54	3.97	5.87	3.91	6.14	3.82
30	4.37	3.50	4.83	3.72	5.17	3.95	5.32	3.94	5.47	3.93	5.80	3.87	6.06	3.77
31	4.32	3.46	4.77	3.68	5.11	3.91	5.26	3.89	5.41	3.88	5.73	3.82	5.99	3.72
32	4.27	3.42	4.71	3.63	5.04	3.86	5.19	3.84	5.34	3.83	5.66	3.77	5.92	3.68
33	4.21	3.37	4.65	3.59	4.98	3.81	5.13	3.79	5.28	3.78	5.59	3.73	5.84	3.63
34	4.16	3.33	4.59	3.54	4.92	3.76	5.06	3.75	5.21	3.74	5.52	3.68	5.77	3.59
35	**4.11**	**3.29**	**4.54**	**3.50**	**4.86**	**3.72**	**5.00**	**3.70**	**5.14**	**3.69**	**5.45**	**3.63**	**5.70**	**3.54**
36	4.05	3.25	4.48	3.45	4.79	3.67	4.94	3.65	5.08	3.64	5.38	3.59	5.62	3.50
37	4.00	3.20	4.42	3.41	4.73	3.62	4.87	3.61	5.01	3.59	5.31	3.54	5.55	3.45
38	3.95	3.16	4.36	3.36	4.67	3.57	4.81	3.56	4.94	3.55	5.24	3.49	5.48	3.41
39	3.90	3.12	4.30	3.32	4.61	3.52	4.74	3.51	4.88	3.50	5.17	3.45	5.40	3.36
40	3.01	2.41	3.32	2.56	3.56	2.72	3.66	2.71	3.77	2.70	3.99	2.66	4.18	2.60
41	2.90	2.33	3.21	2.47	3.44	2.63	3.54	2.62	3.64	2.61	3.85	2.57	4.03	2.51
42	2.80	2.24	3.09	2.38	3.31	2.53	3.41	2.52	3.51	2.51	3.71	2.48	3.88	2.41
43	2.69	2.16	2.98	2.29	3.19	2.44	3.28	2.43	3.37	2.42	3.57	2.38	3.74	2.32
44	2.59	2.07	2.86	2.20	3.06	2.34	3.15	2.33	3.24	2.33	3.43	2.29	3.59	2.23
45	1.79	1.43	1.98	1.52	2.12	1.62	2.18	1.61	2.24	1.61	2.37	1.58	2.48	1.54
46	1.68	1.35	1.86	1.43	1.99	1.52	2.05	1.52	2.11	1.51	2.23	1.49	2.33	1.45

TC:Total Capacity [kW]
SHC:Sensible Heat Capacity [kW]

2-2-5. Part load performance

Combination

Indoor unit : RAV-HM301MUTP-E

Outdoor unit : RAV-GM301AT(J)P-E

Operation range		Cooling		Heating	
		Q	P	Q	P
MINIMUM	W	900	180	800	170
RATING	W	2500	590	3400	760
MAXIMUM	W	3000	820	4500	1400

Q: Capacity in W
W: Power Consumption in W

Cooling

Outdoor Temperature DB (°C)	Parts Load (%)																			
	100		90		80		70		60		50		40		30		20		10	
	Q	P	Q	P	Q	P	Q	P	Q	P	Q	P	Q	P	Q	P	Q	P	Q	P
10	3302	379	2972	337	2642	296	2311	255	1981	214	1651	173	1321	132	1189	116	1189	116	1189	116
11	3270	387	2943	345	2616	303	2289	261	1962	219	1635	177	1308	135	1177	118	1177	118	1177	118
12	3238	395	2914	353	2590	310	2267	267	1943	224	1619	181	1295	138	1166	121	1166	121	1166	121
13	3206	404	2885	360	2565	316	2244	272	1924	229	1603	185	1282	141	1154	123	1154	123	1154	123
14	3174	412	2856	368	2539	323	2222	278	1904	233	1587	189	1270	144	1143	126	1143	126	1143	126
15	3142	421	2828	375	2513	329	2199	284	1885	238	1571	192	1257	147	1131	128	1131	128	1131	128
16	3110	429	2799	383	2488	336	2177	289	1866	243	1555	196	1244	150	1119	131	1119	131	1119	131
17	3078	438	2770	390	2462	343	2154	295	1847	248	1539	200	1231	153	1108	134	1108	134	1108	134
18	3045	446	2741	398	2436	349	2132	301	1827	252	1523	204	1218	156	1096	136	1096	136	1096	136
19	3013	455	2712	405	2411	356	2109	307	1808	257	1507	208	1205	158	1085	139	1085	139	1085	139
20	2981	463	2683	413	2385	363	2087	312	1789	262	1491	212	1193	161	1073	141	1073	141	1073	141
21	2949	472	2654	420	2359	369	2064	318	1770	267	1475	216	1180	164	1062	144	1062	144	1062	144
22	2917	480	2625	428	2334	376	2042	324	1750	272	1459	219	1167	167	1050	146	1050	146	1050	146
23	2885	489	2597	435	2308	382	2020	329	1731	276	1443	223	1154	170	1039	149	1039	149	1039	149
24	2853	497	2568	443	2282	389	1997	335	1712	281	1426	227	1141	173	1027	152	1027	152	1027	152
25	2821	505	2539	451	2257	396	1975	341	1693	286	1410	231	1128	176	1016	154	1016	154	1016	154
26	2789	514	2510	458	2231	402	1952	346	1673	291	1394	235	1116	179	1004	157	1004	157	1004	157
27	2757	522	2481	466	2205	409	1930	352	1654	295	1378	239	1103	182	992	159	992	159	992	159
28	2725	531	2452	473	2180	416	1907	358	1635	300	1362	243	1090	185	981	162	981	162	981	162
29	2693	539	2423	481	2154	422	1885	364	1616	305	1346	246	1077	188	969	165	969	165	969	165
30	2660	548	2394	488	2128	429	1862	369	1596	310	1330	250	1064	191	958	167	958	167	958	167
31	2628	556	2366	496	2103	435	1840	375	1577	315	1314	254	1051	194	946	170	946	170	946	170
32	2596	565	2337	503	2077	442	1817	381	1558	319	1298	258	1039	197	935	172	935	172	935	172
33	2564	573	2308	511	2051	449	1795	386	1539	324	1282	262	1026	200	923	175	923	175	923	175
34	2532	582	2279	518	2026	455	1772	392	1519	329	1266	266	1013	203	912	177	912	177	912	177
35	**2500**	**590**	**2250**	**526**	**2000**	**462**	**1750**	**398**	**1500**	**334**	**1250**	**270**	**1000**	**206**	**900**	**180**	**900**	**180**	**900**	**180**
36	2468	598	2221	533	1974	468	1728	404	1481	339	1234	274	987	209	888	183	888	183	888	183
37	2436	607	2192	541	1949	475	1705	409	1462	343	1218	277	974	212	877	185	877	185	877	185
38	2404	615	2163	549	1923	482	1683	415	1442	348	1202	281	962	214	865	188	865	188	865	188
39	2372	624	2135	556	1897	488	1660	421	1423	353	1186	285	949	217	854	190	854	190	854	190
40	2340	632	2106	564	1872	495	1638	426	1404	358	1170	289	936	220	842	193	842	193	842	193
41	2308	641	2077	571	1846	502	1615	432	1385	362	1154	293	923	223	831	195	831	195	831	195
42	2275	649	2048	579	1820	508	1593	438	1365	367	1138	297	910	226	819	198	819	198	819	198
43	2243	658	2019	586	1795	515	1570	443	1346	372	1122	301	897	229	808	201	808	201	808	201
44	2211	666	1990	594	1769	521	1548	449	1327	377	1106	304	885	232	796	203	796	203	796	203
45	2179	675	1961	601	1743	528	1525	455	1308	382	1090	308	872	235	785	206	785	206	785	206
46	2147	683	1932	609	1718	535	1503	461	1288	386	1074	312	859	238	773	208	773	208	773	208

Heating

Outdoor Temperature DB (°C)	Parts Load (%)																			
	100		90		80		70		60		50		40		30		20		10	
	Q	P	Q	P	Q	P	Q	P	Q	P	Q	P	Q	P	Q	P	Q	P	Q	P
-15	1540	456	1386	410	1232	364	1078	317	924	271	770	225	616	178	462	132	362	102	362	102
-14	1636	475	1472	427	1309	379	1145	330	982	282	818	234	654	186	491	137	385	106	385	106
-13	1732	494	1559	444	1386	393	1213	343	1039	293	866	243	693	193	520	143	408	110	408	110
-12	1829	512	1646	460	1463	408	1280	356	1097	304	914	252	731	200	549	148	430	115	430	115
-11	1925	531	1732	477	1540	423	1347	369	1155	315	962	262	770	208	577	154	453	119	453	119
-10	2021	550	1819	494	1617	438	1415	382	1213	327	1011	271	808	215	606	159	476	123	476	123
-9	2117	568	1906	511	1694	453	1482	395	1270	338	1059	280	847	222	635	165	498	127	498	127
-8	2214	587	1992	528	1771	468	1549	408	1328	349	1107	289	885	230	664	170	521	131	521	131
-7	2310	606	2079	544	1848	483	1617	421	1386	360	1155	298	924	237	693	175	543	136	543	136
-6	2327	613	2094	551	1862	489	1629	427	1396	364	1163	302	931	240	698	177	548	137	548	137
-5	2344	621	2110	558	1875	495	1641	432	1406	369	1172	306	938	243	703	180	552	139	552	139
-4	2361	628	2125	564	1889	501	1653	437	1417	373	1181	309	944	246	708	182	556	140	556	140
-3	2378	636	2140	571	1903	506	1665	442	1427	377	1189	313	951	248	713	184	560	142	560	142
-2	2395	643	2156	578	1916	512	1677	447	1437	382	1198	317	958	251	719	186	564	144	564	144
-1	2412	650	2171	584	1930	518	1689	452	1447	386	1206	320	965	254	724	188	568	145	568	145
0	2430	658	2187	591	1944	524	1701	457	1458	391	1215	324	972	257	729	190	572	147	572	147
1	2447	665	2202	598	1957	530	1713	463	1468	395	1223	328	979	260	734	192	576	149	576	149
2	2464	673	2217	604	1971	536	1725	468	1478	399	1232	331	986	263	739	195	580	150	580	150
3	2504	682	2254	612	2003	543	1753	474	1502	405	1252	336	1002	266	751	197	589	152	589	152
4	2544	691	2290	621	2036	550	1781	480	1527	410	1272	340	1018	270	763	200	599	154	599	154
5	2585	700	2326	629	2068	558	1809	487	1551	416	1292	345	1034	274	775	202	608	157	608	157
6	3312	748	2981	672	2650	596	2319	520	1987	444	1656	368	1325	292	994	217	779	167	779	167
7	**3400**	**760**	**3060**	**683**	**2720**	**606**	**2380**	**529**	**2040**	**451**	**1700**	**374**	**1360**	**297**	**1020**	**220**	**800**	**170**	**800**	**170**
8	3488	772	3139	693	2790	615	2441	537	2093	458	1744	380	1395	302	1046	223	821	173	821	173
9	3575	784	3218	704	2860	624	2503	545	2145	465	1788	386	1430	306	1073	227	841	175	841	175
10	3663	795	3297	715	2931	634	2564	553	2198	472	1832	392	1465	311	1099	230	862	178	862	178
11	3751	807	3376	725	3001	643	2626	561	2251	479	1875	397	1500	315	1125	234	883	181	883	181
12	3839	819	3455	736	3071	653	2687	569	2303	486	1919	403	1535	320	1152	237	903	183	903	183
13	3926	831	3534	746	3141	662	2749	578	2356	493	1963	409	1571	325	1178	240	924	186	924	186
14	4014	842	3613	757	3211	671	2810	586	2409	500	2007	415	1606	329	1204	244	945	188	945	188
15	4102	854	3692	767	3282	681	2871	594	2461	507	2051	421	1641	334	1231	247	965	191	965	191
16	4190	866	3771	778	3352	690	2933	602	2514	514	2095	426	1676	338	1257	251	986	194	986	194
17	4277	878	3850	789	3422	699	2994	610	2566	521	2139	432	1711	343	1283	254	1006	196	1006	196
18	4365	889	3929	799	3492	709	3056	619	2619	528	2183	438	1746	348	1310	257	1027	199	1027	199
19	4453	901	4008	810	3562	718	3117	627	2672	535	2226	444	1781	352	1336	261	1048	202	1048	202
20	4541	913	4087	820	3633	728	3178	635	2724	542	2270	450	1816	357	1362	264	1068	204	1068	204
21	4628	925	4166	831	3703	737	3240	643	2777	549	2314	455	1851	361	1389	268	1089	207	1089	207
22	4716	937	4245	841	3773	746	3301	651	2830	556	2358	461	1886	366	1415	271	1110	209	1110	209
23	4804	948	4323	852	3843	756	3363	659	2882	563	2402	467	1922	371	1441	274	1130	212	1130	212
24	4892	960	4402	863	3913	765	3424	668	2935	570	2446	473	1957	375	1467	278	1151	215	1151	215

Combination

Indoor unit : RAV-HM401MUTP-E

Outdoor unit : RAV-GM401AT(J)P-E

Operation range		Cooling		Heating	
		Q	P	Q	P
MINIMUM	W	900	180	800	140
RATING	W	3600	900	4000	950
MAXIMUM	W	4000	2000	5000	1700

Cooling

Outdoor Temperature DB (°C)	Parts Load (%)																			
	100		90		80		70		60		50		40		30		20		10	
	Q	P	Q	P	Q	P	Q	P	Q	P	Q	P	Q	P	Q	P	Q	P	Q	P
10	4755	578	4280	516	3804	454	3329	393	2853	331	2378	270	1902	208	1427	146	1189	116	1189	116
11	4709	590	4238	527	3767	464	3296	401	2825	338	2354	276	1884	213	1413	150	1177	118	1177	118
12	4663	603	4196	539	3730	475	3264	410	2798	346	2331	282	1865	217	1399	153	1166	121	1166	121
13	4616	616	4155	550	3693	485	3231	419	2770	353	2308	288	1847	222	1385	156	1154	123	1154	123
14	4570	629	4113	562	3656	495	3199	428	2742	361	2285	294	1828	226	1371	159	1143	126	1143	126
15	4524	642	4072	574	3619	505	3167	437	2714	368	2262	300	1810	231	1357	163	1131	128	1131	128
16	4478	655	4030	585	3582	515	3134	445	2687	375	2239	306	1791	236	1343	166	1119	131	1119	131
17	4432	668	3988	597	3545	525	3102	454	2659	383	2216	312	1773	240	1329	169	1108	134	1108	134
18	4385	681	3947	608	3508	535	3070	463	2631	390	2193	318	1754	245	1316	172	1096	136	1096	136
19	4339	694	3905	620	3471	546	3037	472	2604	398	2170	324	1736	250	1302	176	1085	139	1085	139
20	4293	707	3864	631	3434	556	3005	480	2576	405	2147	330	1717	254	1288	179	1073	141	1073	141
21	4247	719	3822	643	3397	566	2973	489	2548	412	2123	336	1699	259	1274	182	1062	144	1062	144
22	4201	732	3781	654	3360	576	2940	498	2520	420	2100	342	1680	264	1260	186	1050	146	1050	146
23	4154	745	3739	666	3324	586	2908	507	2493	427	2077	348	1662	268	1246	189	1039	149	1039	149
24	4108	758	3697	677	3287	596	2876	516	2465	435	2054	354	1643	273	1232	192	1027	152	1027	152
25	4062	771	3656	689	3250	607	2843	524	2437	442	2031	360	1625	278	1219	195	1016	154	1016	154
26	4016	784	3614	700	3213	617	2811	533	2409	449	2008	366	1606	282	1205	199	1004	157	1004	157
27	3970	797	3573	712	3176	627	2779	542	2382	457	1985	372	1588	287	1191	202	992	159	992	159
28	3923	810	3531	723	3139	637	2746	551	2354	464	1962	378	1569	291	1177	205	981	162	981	162
29	3877	823	3489	735	3102	647	2714	559	2326	472	1939	384	1551	296	1163	208	969	165	969	165
30	3831	836	3448	746	3065	657	2682	568	2299	479	1916	390	1532	301	1149	212	958	167	958	167
31	3785	848	3406	758	3028	667	2649	577	2271	486	1892	396	1514	305	1135	215	946	170	946	170
32	3739	861	3365	769	2991	678	2617	586	2243	494	1869	402	1495	310	1122	218	935	172	935	172
33	3692	874	3323	781	2954	688	2585	594	2215	501	1846	408	1477	315	1108	221	923	175	923	175
34	3646	887	3282	792	2917	698	2552	603	2188	509	1823	414	1458	319	1094	225	912	177	912	177
35	**3600**	**900**	**3240**	**804**	**2880**	**708**	**2520**	**612**	**2160**	**516**	**1800**	**420**	**1440**	**324**	**1080**	**228**	**900**	**180**	**900**	**180**
36	3554	913	3198	816	2843	718	2488	621	2132	523	1777	426	1422	329	1066	231	888	183	888	183
37	3508	926	3157	827	2806	728	2455	630	2105	531	1754	432	1403	333	1052	235	877	185	877	185
38	3461	939	3115	839	2769	738	2423	638	2077	538	1731	438	1385	338	1038	238	865	188	865	188
39	3415	952	3074	850	2732	749	2391	647	2049	546	1708	444	1366	343	1025	241	854	190	854	190
40	3369	965	3032	862	2695	759	2358	656	2021	553	1685	450	1348	347	1011	244	842	193	842	193
41	3323	977	2991	873	2658	769	2326	665	1994	560	1661	456	1329	352	997	248	831	195	831	195
42	3277	990	2949	885	2621	779	2294	673	1966	568	1638	462	1311	357	983	251	819	198	819	198
43	3230	1003	2907	896	2584	789	2261	682	1938	575	1615	468	1292	361	969	254	808	201	808	201
44	3184	1016	2866	908	2547	799	2229	691	1911	583	1592	474	1274	366	955	257	796	203	796	203
45	3138	1029	2824	919	2510	809	2197	700	1883	590	1569	480	1255	370	941	261	785	206	785	206
46	3092	1042	2783	931	2473	820	2164	708	1855	597	1546	486	1237	375	928	264	773	208	773	208

Heating

Outdoor Temperature DB (°C)	Parts Load (%)																			
	100		90		80		70		60		50		40		30		20		10	
	Q	P	Q	P	Q	P	Q	P	Q	P	Q	P	Q	P	Q	P	Q	P	Q	P
-15	1812	570	1630	510	1449	449	1268	388	1087	327	906	266	725	206	543	145	362	84	362	84
-14	1902	590	1712	527	1522	464	1332	402	1141	339	951	276	761	213	571	150	380	87	380	87
-13	1993	610	1793	545	1594	480	1395	415	1196	350	996	285	797	220	598	155	399	90	399	90
-12	2083	630	1875	563	1667	496	1458	429	1250	361	1042	294	833	227	625	160	417	93	417	93
-11	2174	650	1957	581	1739	511	1522	442	1304	373	1087	304	870	234	652	165	435	96	435	96
-10	2264	670	2038	598	1812	527	1585	456	1359	384	1132	313	906	242	679	170	453	99	453	99
-9	2355	690	2120	616	1884	543	1649	469	1413	396	1178	322	942	249	707	175	471	102	471	102
-8	2446	710	2201	634	1957	558	1712	483	1467	407	1223	331	978	256	734	180	489	105	489	105
-7	2536	730	2283	652	2029	574	1775	496	1522	419	1268	341	1014	263	761	185	507	108	507	108
-6	2576	742	2319	663	2061	584	1804	505	1546	426	1288	347	1031	267	773	188	515	109	515	109
-5	2617	754	2355	674	2093	593	1832	513	1570	433	1308	352	1047	272	785	192	523	111	523	111
-4	2657	767	2391	685	2126	603	1860	521	1594	440	1329	358	1063	276	797	195	531	113	531	113
-3	2697	779	2428	696	2158	613	1888	530	1618	447	1349	364	1079	281	809	198	539	115	539	115
-2	2738	791	2464	707	2190	623	1916	538	1643	454	1369	370	1095	285	821	201	548	117	548	117
-1	2778	804	2500	718	2222	632	1944	547	1667	461	1389	375	1111	290	833	204	556	118	556	118
0	2818	816	2536	729	2254	642	1973	555	1691	468	1409	381	1127	294	845	207	564	120	564	120
1	2858	828	2572	740	2287	652	2001	564	1715	475	1429	387	1143	299	857	210	572	122	572	122
2	2899	841	2609	751	2319	662	2029	572	1739	482	1449	393	1159	303	870	213	580	124	580	124
3	2946	852	2651	761	2357	670	2062	580	1768	489	1473	398	1178	307	884	216	589	126	589	126
4	2994	863	2694	771	2395	679	2095	587	1796	495	1497	403	1197	311	898	219	599	127	599	127
5	3041	875	2737	781	2433	688	2129	595	1825	502	1520	409	1216	315	912	222	608	129	608	129
6	3897	935	3507	836	3117	736	2728	636	2338	537	1948	437	1559	337	1169	238	779	138	779	138
7	**4000**	**950**	**3600**	**849**	**3200**	**748**	**2800**	**646**	**2400**	**545**	**2000**	**444**	**1600**	**343**	**1200**	**241**	**800**	**140**	**800**	**140**
8	4103	965	3693	862	3283	759	2872	656	2462	553	2052	451	1641	348	1231	245	821	142	821	142
9	4206	979	3786	875	3365	771	2945	666	2524	562	2103	457	1683	353	1262	249	841	144	841	144
10	4310	994	3879	888	3448	782	3017	676	2586	570	2155	464	1724	358	1293	252	862	147	862	147
11	4413	1009	3972	901	3530	794	3089	686	2648	579	2206	471	1765	364	1324	256	883	149	883	149
12	4516	1024	4065	914	3613	805	3161	696	2710	587	2258	478	1806	369	1355	260	903	151	903	151
13	4619	1038	4157	928	3695	817	3234	706	2772	596	2310	485	1848	374	1386	264	924	153	924	153
14	4723	1053	4250	941	3778	829	3306	716	2834	604	2361	492	1889	380	1417	267	945	155	945	155
15	4826	1068	4343	954	3861	840	3378	726	2895	613	2413	499	1930	385	1448	271	965	157	965	157
16	4929	1082	4436	967	3943	852	3450	736	2957	621	2465	506	1972	390	1479	275	986	160	986	160
17	5032	1097	4529	980	4026	863	3523	746	3019	629	2516	512	2013	396	1510	279	1006	162	1006	162
18	5135	1112	4622	993	4108	875	3595	756	3081	638	2568	519	2054	401	1541	282	1027	164	1027	164
19	5239	1127	4715	1006	4191	886	3667	766	3143	646	2619	526	2095	406	1572	286	1048	166	1048	166
20	5342	1141	4808	1020	4274	898	3739	776	3205	655	2671	533	2137	411	1603	290	1068	168	1068	168
21	5445	1156	4901	1033	4356	910	3812	786	3267	663	2723	540	2178	417	1634	294	1089	170	1089	170
22	5548	1171	4994	1046	4439	921	3884	796	3329	672	2774	547	2219	422	1665	297	1110	173	1110	173
23	5652	1185	5086	1059	4521	933	3956	806	3391	680	2826	554	2261	427	1695	301	1130	175	1130	175
24	5755	1200	5179	1072	4604	944	4028	816	3453	688	2877	561	2302	433	1726	305	1151	177	1151	177

Combination

Indoor unit : RAV-HM561MUTP-E/TR

Outdoor unit : RAV-GM561ATP-E1/TR1, RAV-GM561ATJP-E1

Operation range		Cooling		Heating	
		Q	P	Q	P
MINIMUM	W	1200	300	1500	300
RATING	W	5000	1640	5300	1470
MAXIMUM	W	5600	1860	6300	2400

Cooling

Outdoor Temperature DB (°C)	Parts Load (%)																			
	100		90		80		70		60		50		40		30		20		10	
	Q	P	Q	P	Q	P	Q	P	Q	P	Q	P	Q	P	Q	P	Q	P	Q	P
10	6604	1052	5944	930	5283	807	4623	684	3963	561	3302	438	2642	315	1981	193	1981	193	1981	193
11	6540	1076	5886	950	5232	825	4578	699	3924	574	3270	448	2616	322	1962	197	1962	197	1962	197
12	6476	1099	5828	971	5181	843	4533	714	3886	586	3238	458	2590	329	1943	201	1943	201	1943	201
13	6412	1123	5771	992	5129	861	4488	730	3847	599	3206	468	2565	336	1924	205	1924	205	1924	205
14	6348	1146	5713	1013	5078	879	4443	745	3809	611	3174	477	2539	344	1904	210	1904	210	1904	210
15	6283	1170	5655	1033	5027	897	4398	760	3770	624	3142	487	2513	351	1885	214	1885	214	1885	214
16	6219	1193	5597	1054	4975	915	4353	775	3732	636	3110	497	2488	358	1866	218	1866	218	1866	218
17	6155	1217	5540	1075	4924	933	4309	791	3693	649	3078	507	2462	365	1847	223	1847	223	1847	223
18	6091	1240	5482	1096	4873	951	4264	806	3655	661	3045	516	2436	372	1827	227	1827	227	1827	227
19	6027	1264	5424	1116	4821	969	4219	821	3616	674	3013	526	2411	379	1808	231	1808	231	1808	231
20	5963	1287	5366	1137	4770	987	4174	837	3578	686	2981	536	2385	386	1789	236	1789	236	1789	236
21	5898	1311	5309	1158	4719	1005	4129	852	3539	699	2949	546	2359	393	1770	240	1770	240	1770	240
22	5834	1334	5251	1179	4667	1023	4084	867	3501	711	2917	556	2334	400	1750	244	1750	244	1750	244
23	5770	1358	5193	1199	4616	1041	4039	882	3462	724	2885	565	2308	407	1731	248	1731	248	1731	248
24	5706	1381	5135	1220	4565	1059	3994	898	3424	736	2853	575	2282	414	1712	253	1712	253	1712	253
25	5642	1405	5078	1241	4513	1077	3949	913	3385	749	2821	585	2257	421	1693	257	1693	257	1693	257
26	5578	1428	5020	1262	4462	1095	3904	928	3347	762	2789	595	2231	428	1673	261	1673	261	1673	261
27	5513	1452	4962	1282	4411	1113	3859	944	3308	774	2757	605	2205	435	1654	266	1654	266	1654	266
28	5449	1475	4904	1303	4359	1131	3814	959	3270	787	2725	614	2180	442	1635	270	1635	270	1635	270
29	5385	1499	4847	1324	4308	1149	3770	974	3231	799	2693	624	2154	449	1616	274	1616	274	1616	274
30	5321	1522	4789	1345	4257	1167	3725	989	3193	812	2660	634	2128	456	1596	279	1596	279	1596	279
31	5257	1546	4731	1366	4205	1185	3680	1005	3154	824	2628	644	2103	463	1577	283	1577	283	1577	283
32	5193	1569	4673	1386	4154	1203	3635	1020	3116	837	2596	653	2077	470	1558	287	1558	287	1558	287
33	5128	1593	4616	1407	4103	1221	3590	1035	3077	849	2564	663	2051	477	1539	291	1539	291	1539	291
34	5064	1616	4558	1428	4051	1239	3545	1050	3039	862	2532	673	2026	484	1519	296	1519	296	1519	296
35	**5000**	**1640**	**4500**	**1449**	**4000**	**1257**	**3500**	**1066**	**3000**	**874**	**2500**	**683**	**2000**	**491**	**1500**	**300**	**1500**	**300**	**1500**	**300**
36	4936	1664	4442	1469	3949	1275	3455	1081	2962	887	2468	693	1974	498	1481	304	1481	304	1481	304
37	4872	1687	4385	1490	3897	1293	3410	1096	2923	899	2436	702	1949	506	1462	309	1462	309	1462	309
38	4808	1711	4327	1511	3846	1311	3365	1112	2885	912	2404	712	1923	513	1442	313	1442	313	1442	313
39	4743	1734	4269	1532	3795	1329	3320	1127	2846	924	2372	722	1897	520	1423	317	1423	317	1423	317
40	3836	1449	3453	1279	3069	1110	2686	941	2302	772	1918	603	1535	434	1151	265	1151	265	1151	265
41	3708	1449	3337	1279	2967	1110	2596	941	2225	772	1854	603	1483	434	1112	265	1112	265	1112	265
42	3580	1449	3222	1279	2864	1110	2506	941	2148	772	1790	603	1432	434	1074	265	1074	265	1074	265
43	3452	1449	3106	1279	2761	1110	2416	941	2071	772	1726	603	1381	434	1035	265	1035	265	1035	265
44	3323	1449	2991	1279	2659	1110	2326	941	1994	772	1662	603	1329	434	997	265	997	265	997	265
45	2311	1124	2080	993	1848	862	1617	731	1386	599	1155	468	924	337	693	206	693	206	693	206
46	2182	1124	1964	993	1746	862	1528	731	1309	599	1091	468	873	337	655	206	655	206	655	206

Heating

Outdoor Temperature DB (°C)	Parts Load (%)																			
	100		90		80		70		60		50		40		30		20		10	
	Q	P	Q	P	Q	P	Q	P	Q	P	Q	P	Q	P	Q	P	Q	P	Q	P
-15	2400	883	2160	785	1920	687	1680	589	1440	491	1200	393	960	295	720	197	679	180	679	180
-14	2550	913	2295	812	2040	711	1785	609	1530	508	1275	406	1020	305	765	204	722	186	722	186
-13	2700	944	2430	839	2160	735	1890	630	1620	525	1350	420	1080	315	810	210	764	193	764	193
-12	2850	975	2565	867	2280	759	1995	650	1710	542	1425	434	1140	326	855	217	807	199	807	199
-11	3000	1006	2700	894	2400	782	2100	671	1800	559	1500	448	1200	336	900	224	849	205	849	205
-10	3150	1037	2835	921	2520	806	2205	691	1890	576	1575	461	1260	346	945	231	892	212	892	212
-9	3300	1067	2970	949	2640	830	2310	712	1980	593	1650	475	1320	356	990	238	934	218	934	218
-8	3451	1098	3105	976	2760	854	2415	732	2070	610	1725	489	1380	367	1035	245	977	224	977	224
-7	3601	1129	3240	1004	2880	878	2520	753	2160	628	1800	502	1440	377	1080	252	1019	230	1019	230
-6	3627	1148	3264	1021	2902	893	2539	766	2176	638	1814	511	1451	383	1088	256	1027	234	1027	234
-5	3654	1167	3288	1038	2923	908	2558	778	2192	649	1827	519	1462	390	1096	260	1034	238	1034	238
-4	3681	1186	3313	1055	2944	923	2576	791	2208	659	1840	528	1472	396	1104	264	1042	242	1042	242
-3	3707	1205	3337	1072	2966	938	2595	804	2224	670	1854	536	1483	403	1112	269	1049	246	1049	246
-2	3734	1224	3361	1089	2987	953	2614	817	2240	681	1867	545	1494	409	1120	273	1057	250	1057	250
-1	3761	1244	3385	1106	3008	967	2632	829	2256	691	1880	553	1504	415	1128	277	1064	254	1064	254
0	3787	1263	3409	1122	3030	982	2651	842	2272	702	1894	562	1515	422	1136	281	1072	258	1072	258
1	3814	1282	3433	1139	3051	997	2670	855	2288	713	1907	570	1526	428	1144	286	1079	262	1079	262
2	3841	1301	3457	1156	3072	1012	2688	868	2304	723	1920	579	1536	434	1152	290	1087	265	1087	265
3	3903	1318	3513	1172	3123	1026	2732	879	2342	733	1952	587	1561	440	1171	294	1105	269	1105	269
4	3966	1336	3570	1188	3173	1039	2776	891	2380	743	1983	594	1587	446	1190	298	1123	273	1123	273
5	4029	1353	3626	1203	3223	1053	2821	903	2418	752	2015	602	1612	452	1209	302	1140	276	1140	276
6	5163	1447	4647	1287	4131	1126	3614	965	3098	805	2582	644	2065	483	1549	323	1461	295	1461	295
7	**5300**	**1470**	**4770**	**1307**	**4240**	**1144**	**3710**	**980**	**3180**	**817**	**2650**	**654**	**2120**	**491**	**1590**	**328**	**1500**	**300**	**1500**	**300**
8	5437	1493	4893	1327	4349	1161	3806	996	3262	830	2718	664	2175	498	1631	333	1539	305	1539	305
9	5574	1516	5016	1347	4459	1179	3901	1011	3344	843	2787	674	2229	506	1672	338	1577	309	1577	309
10	5710	1538	5139	1368	4568	1197	3997	1026	3426	855	2855	684	2284	514	1713	343	1616	314	1616	314
11	5847	1561	5262	1388	4678	1214	4093	1041	3508	868	2924	695	2339	521	1754	348	1655	319	1655	319
12	5984	1584	5385	1408	4787	1232	4189	1056	3590	881	2992	705	2394	529	1795	353	1694	323	1694	323
13	6121	1607	5509	1428	4897	1250	4284	1072	3672	893	3060	715	2448	537	1836	358	1732	328	1732	328
14	6257	1629	5632	1448	5006	1268	4380	1087	3754	906	3129	725	2503	544	1877	363	1771	333	1771	333
15	6394	1652	5755	1469	5115	1285	4476	1102	3837	918	3197	735	2558	552	1918	368	1810	337	1810	337
16	6531	1675	5878	1489	5225	1303	4572	1117	3919	931	3265	745	2612	559	1959	373	1848	342	1848	342
17	6668	1698	6001	1509	5334	1321	4667	1132	4001	944	3334	755	2667	567	2000	378	1887	346	1887	346
18	6805	1720	6124	1529	5444	1338	4763	1147	4083	956	3402	765	2722	575	2041	384	1926	351	1926	351
19	6941	1743	6247	1550	5553	1356	4859	1163	4165	969	3471	776	2777	582	2082	389	1965	356	1965	356
20	7078	1766	6370	1570	5662	1374	4955	1178	4247	982	3539	786	2831	590	2123	394	2003	360	2003	360
21	7215	1789	6493	1590	5772	1392	5050	1193	4329	994	3607	796	2886	597	2164	399	2042	365	2042	365
22	7352	1811	6616	1610	5881	1409	5146	1208	4411	1007	3676	806	2941	605	2205	404	2081	370	2081	370
23	7488	1834	6740	1631	5991	1427	5242	1223	4493	1020	3744	816	2995	613	2247	409	2119	374	2119	374
24	7625	1857	6863	1651	6100	1445	5338	1239	4575	1032	3813	826	3050	620	2288	414	2158	379	2158	379

Combination

Indoor unit : RAV-HM561MUT-E/TR x 2 (Twin System)

Outdoor unit : RAV-GM1101ATP-E/TR, RAV-GM1101ATJP-E/TR

	Cooling		Heating	
	Capacity(W)	Power consumption (W)	Capacity(W)	Power consumption (W)
MINIMUM	3000	600	3000	600
RATING	9500	3000	11200	3260

Q: Capacity in W
W: Power Consumption in W

Cooling

Outdoor temperature(ºC)		Load(%)									
		100	**90**	**80**	**70**	**60**	**50**	**40**	**30**	**20**	**10**
40	Q	9000	8100	7200	6300	5400	4500	3600	2840	2840	2840
	W	3260	2600	2120	1710	1360	1050	830	650	650	650
35	Q	9500	8550	7600	6650	5700	4750	3800	3000	3000	3000
	W	3000	2390	1950	1570	1250	970	760	600	600	600
30	Q	9960	8960	7960	6970	5970	4980	3980	3140	3140	3140
	W	2720	2170	1770	1420	1130	880	690	540	540	540
25	Q	10340	9300	8270	7240	6200	5170	4130	3260	3260	3260
	W	2470	1970	1610	1290	1030	800	630	490	490	490
20	Q	10610	9550	8490	7430	6370	5310	4240	3350	3350	3350
	W	2240	1780	1450	1170	930	720	570	450	450	450

Heating

Outdoor temperature(ºC)		Load(%)									
		100	**90**	**80**	**70**	**60**	**50**	**40**	**30**	**20**	**10**
15	Q	13510	12160	10800	9450	8100	6750	5400	4050	3620	3620
	W	3680	3050	2560	2110	1710	1330	990	690	680	680
10	Q	12060	10850	9650	8440	7230	6030	4820	3620	3230	3230
	W	3410	2830	2380	1960	1580	1240	920	640	630	630
7	Q	11200	10080	8960	7840	6720	5600	4480	3360	3000	3000
	W	3260	2700	2270	1870	1510	1180	880	610	600	600
5	Q	8500	7650	6800	5950	5100	4250	3400	2550	2280	2280
	W	2990	2480	2080	1720	1390	1080	810	560	550	550
2	Q	8100	7290	6480	5670	4860	4050	3240	2430	2170	2170
	W	2880	2380	2000	1650	1330	1040	780	540	530	530
0	Q	7840	7060	6270	5490	4700	3920	3140	2350	2100	2100
	W	2800	2320	1950	1610	1300	1010	760	520	520	520
-5	Q	7180	6460	5740	5030	4310	3590	2870	2150	1920	1920
	W	2610	2160	1820	1500	1210	940	700	490	480	480
-7	Q	6920	6230	5530	4840	4150	3460	2770	2080	1850	1850
	W	2530	2100	1760	1450	1170	920	680	470	470	470
-10	Q	6290	5660	5030	4400	3780	3150	2520	1890	1690	1690
	W	2420	2000	1680	1390	1120	870	650	450	440	440
-15	Q	4840	4360	3870	3390	2910	2420	1940	1450	1300	1300
	W	2150	1780	1500	1230	990	780	580	400	400	400

2-2-6. Air Throw Distance Chart

Standard Mode

RAV-HM301MUTP-E

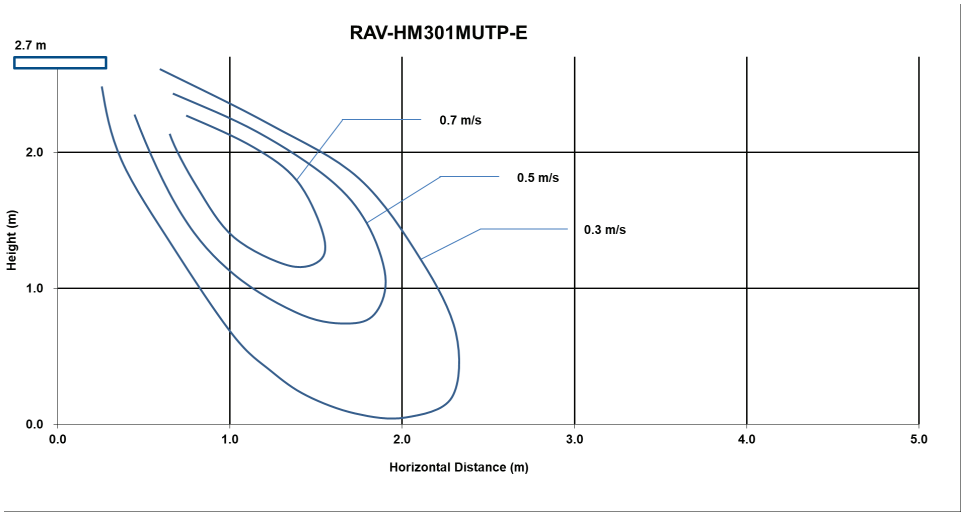

RAV-HM401MUTP-E

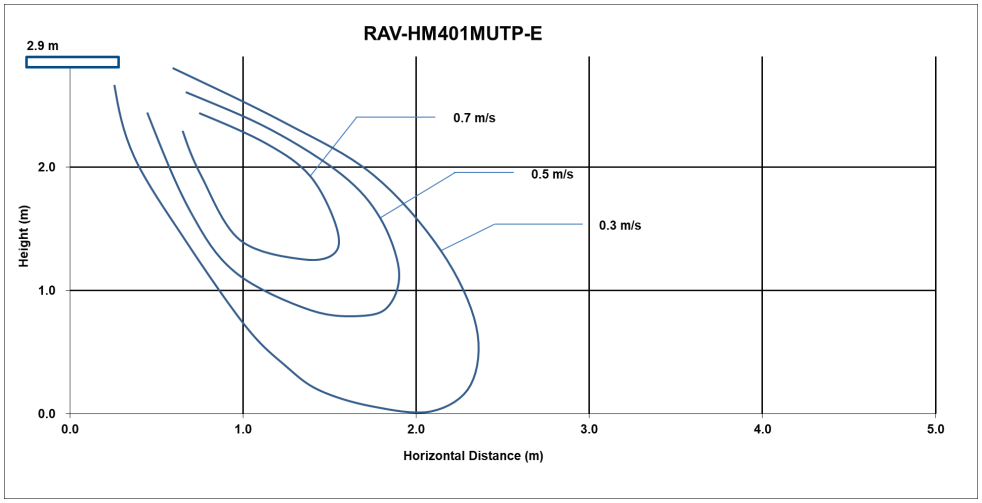

RAV-HM561MUTP-E/TR

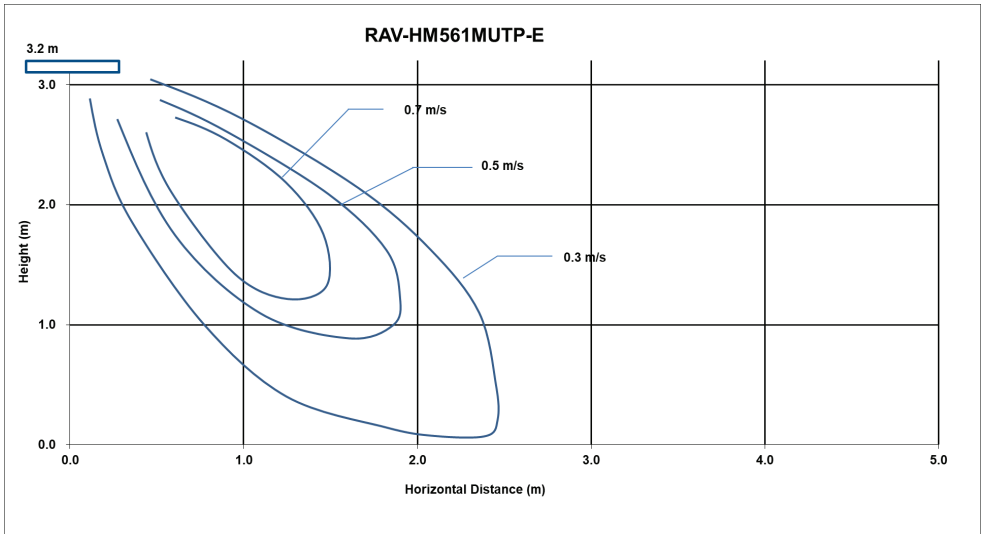

High ceiling Mode (1)

RAV-HM401MUTP-E

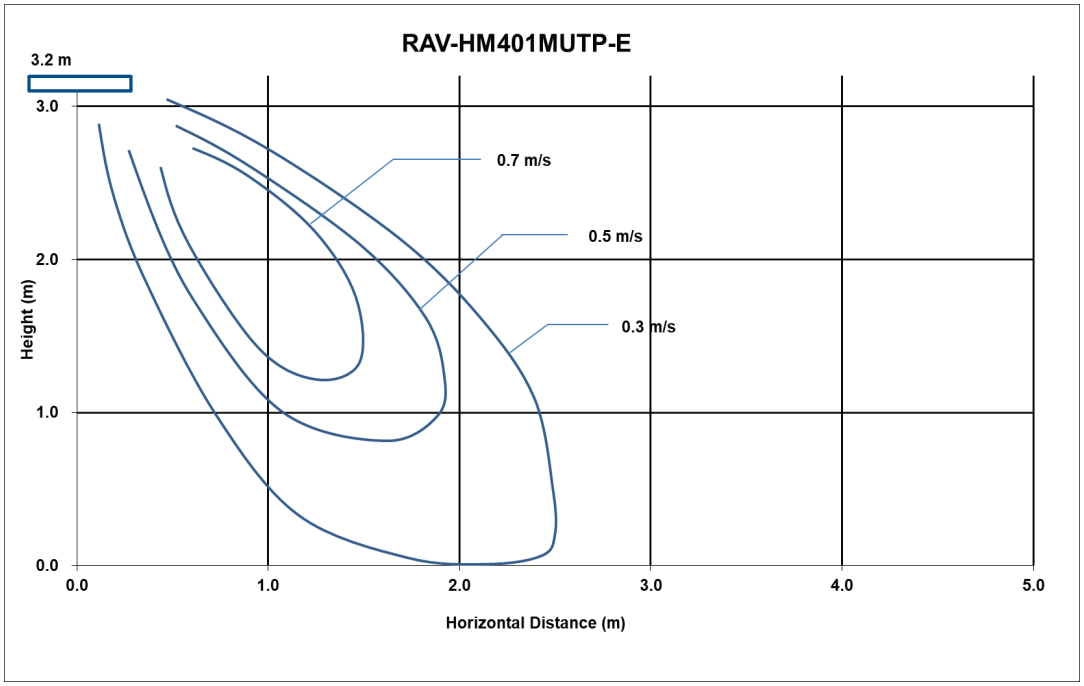

RAV-HM561MUTP-E

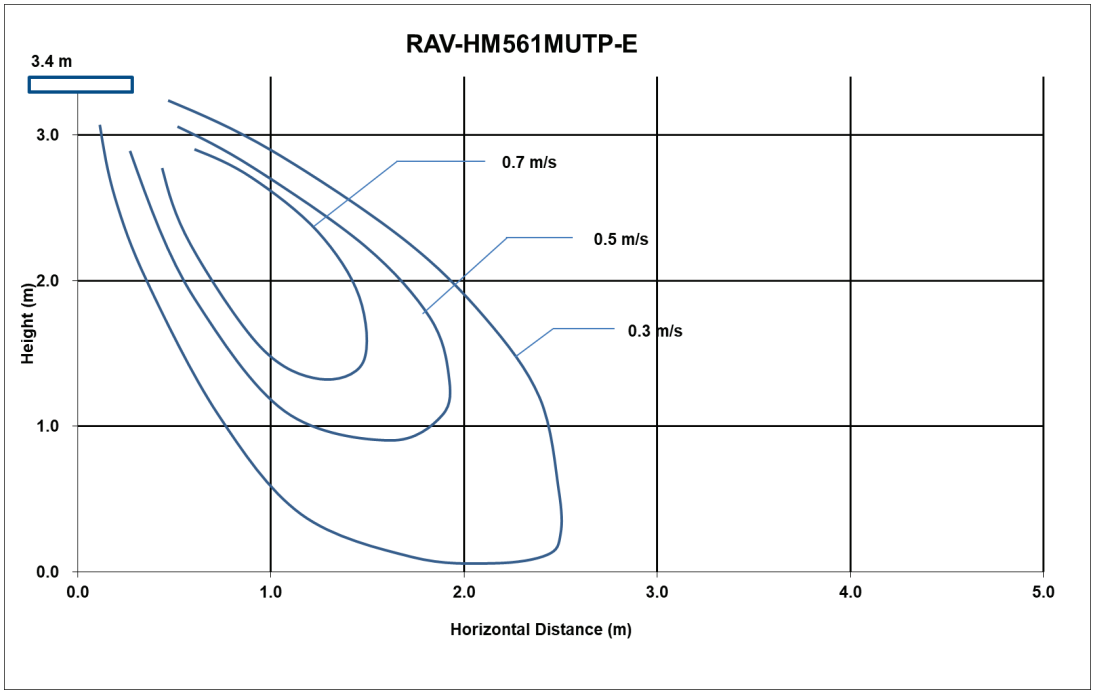

High ceiling Mode (3)

RAV-HM401MUTP-E

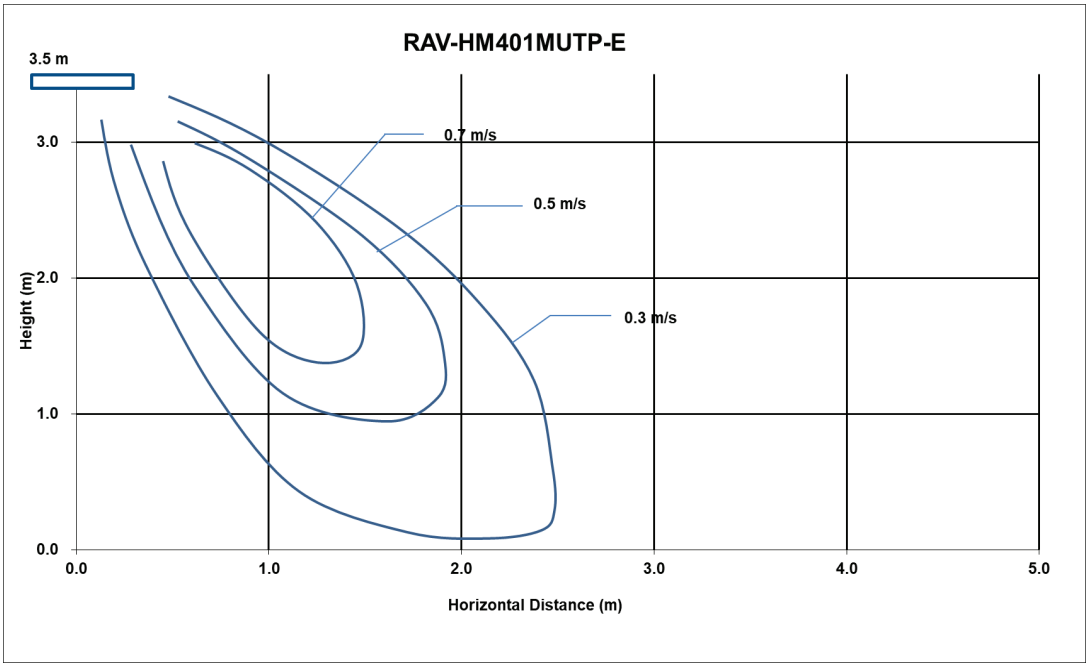

RAV-HM561MUTP-E

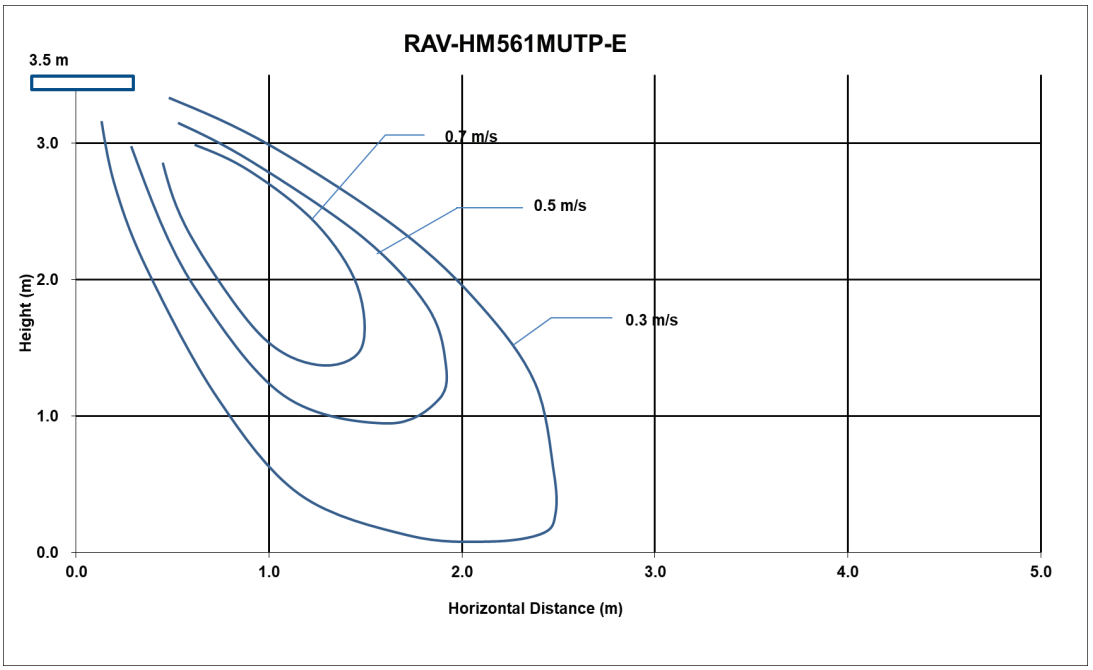

2-2-7. Sound Characteristics (NC curve)

Model : RAV-HM301MUTP-E

Cooling

Specification (dB)			
Fan tap	H	M	L
Sound pressure level (dB(A))	38	36	30

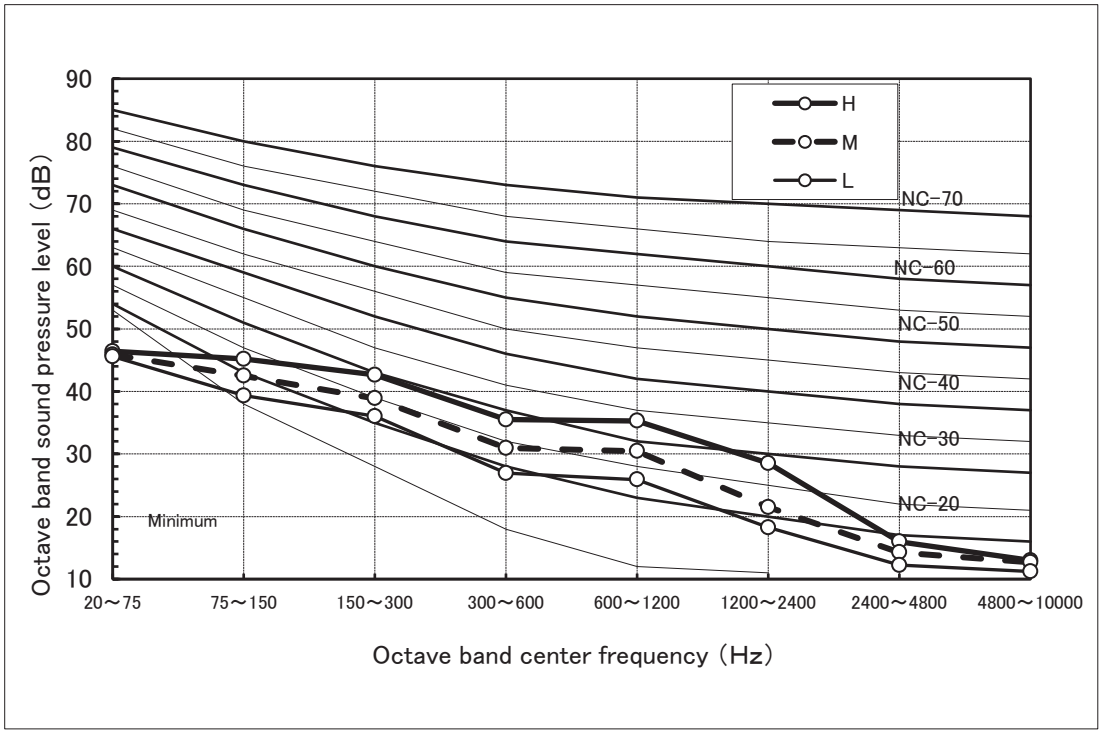

Heating

Specification (dB)			
Fan tap	H	M	L
Sound pressure level (dB(A))	38	36	30

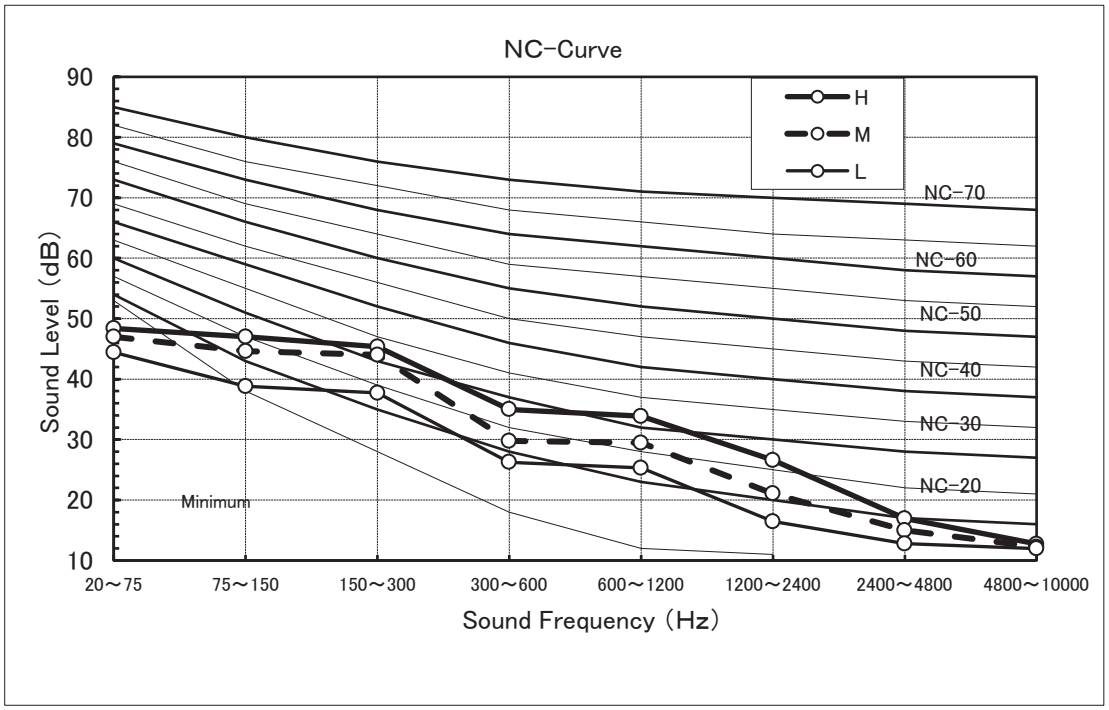

Model : RAV-HM401MUTP-E

Cooling

Specification (dB)			
Fan tap	H	M	L
Sound pressure level (dB(A))	41	36	32

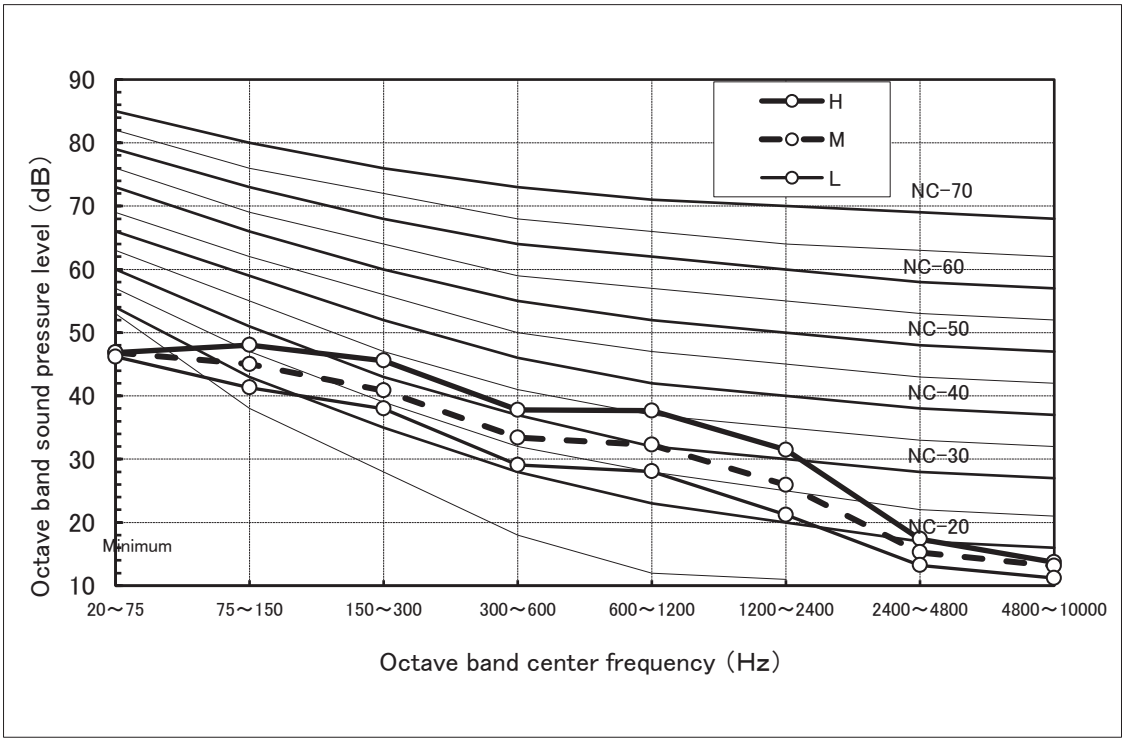

Heating

Specification (dB)			
Fan tap	H	M	L
Sound pressure level (dB(A))	41	36	32

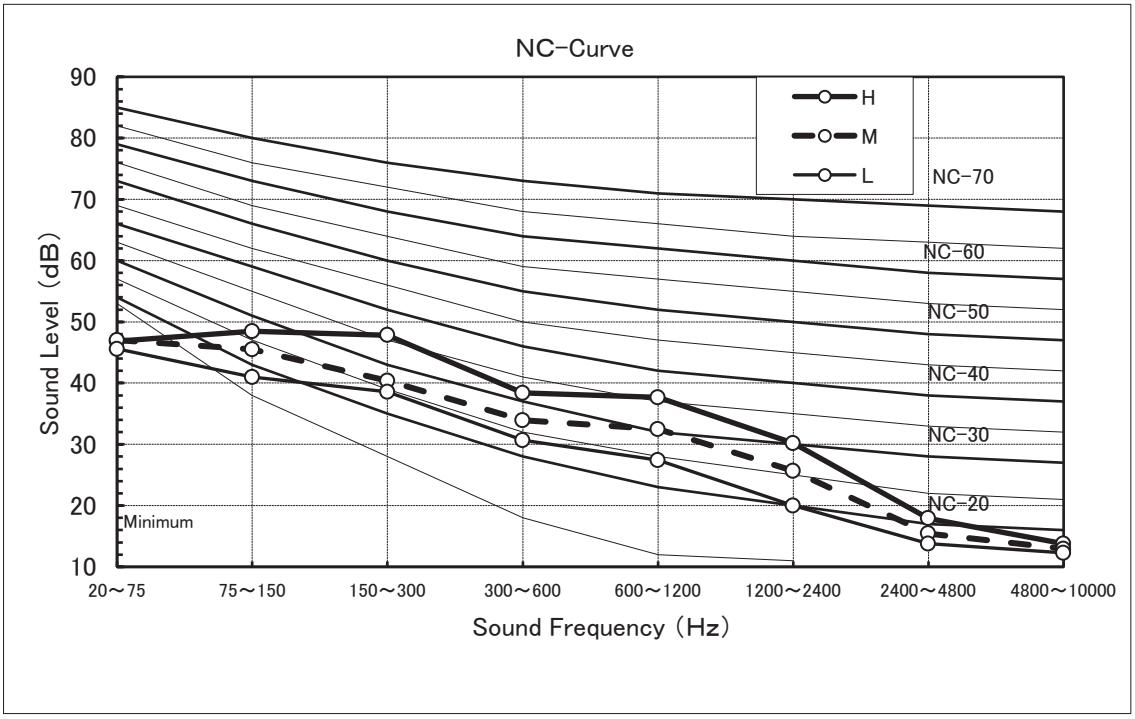

Model : RAV-HM561MUTP-E

Cooling

Specification (dB)			
Fan tap	H	M	L
Sound pressure level (dB(A))	44	39	35

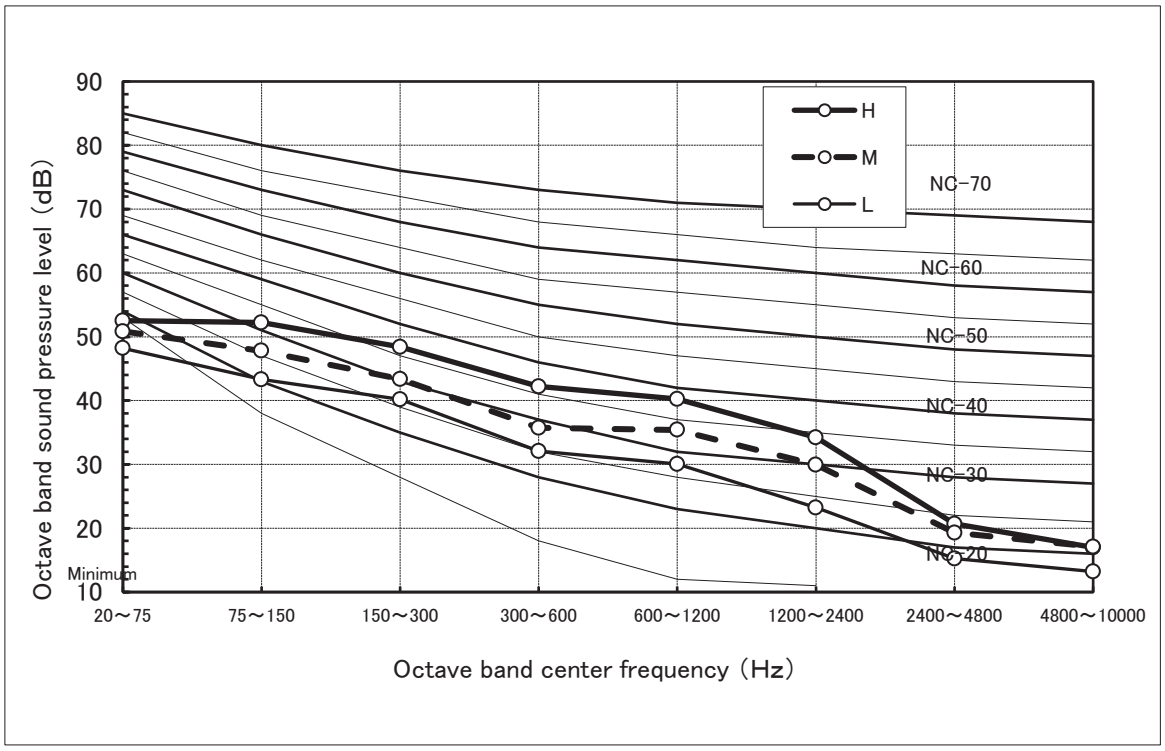

Heating

Specification (dB)			
Fan tap	H	M	L
Sound pressure level (dB(A))	44	39	35

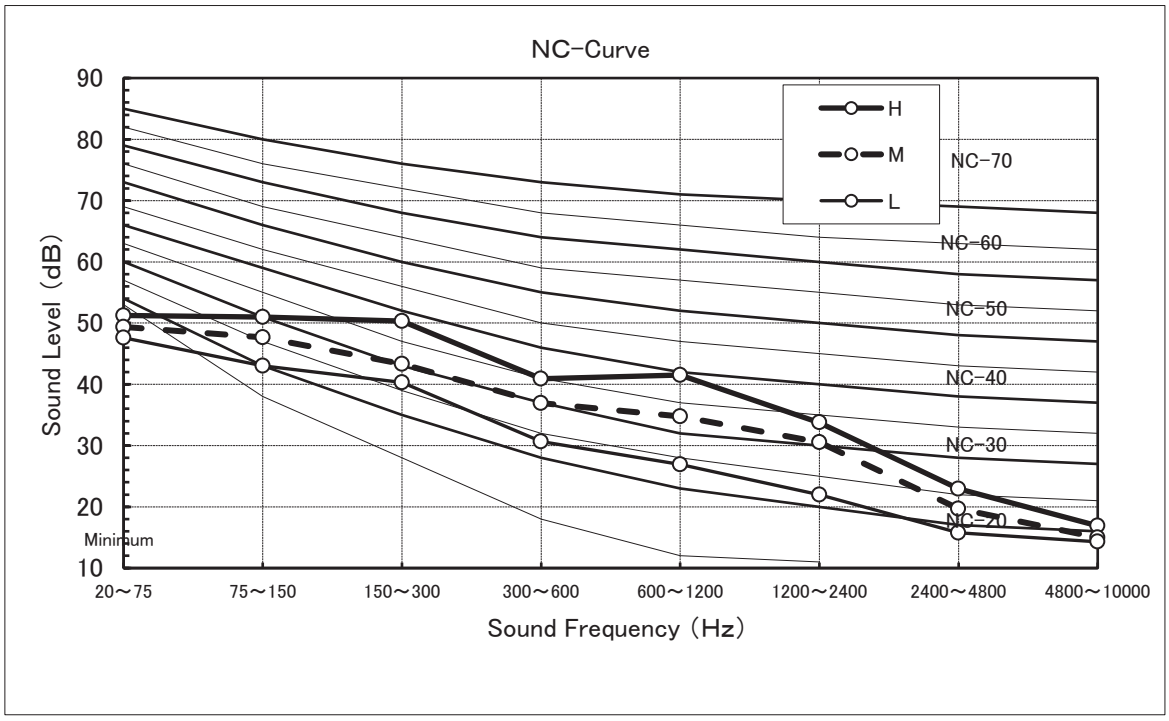

2-2-8. Accessoreis

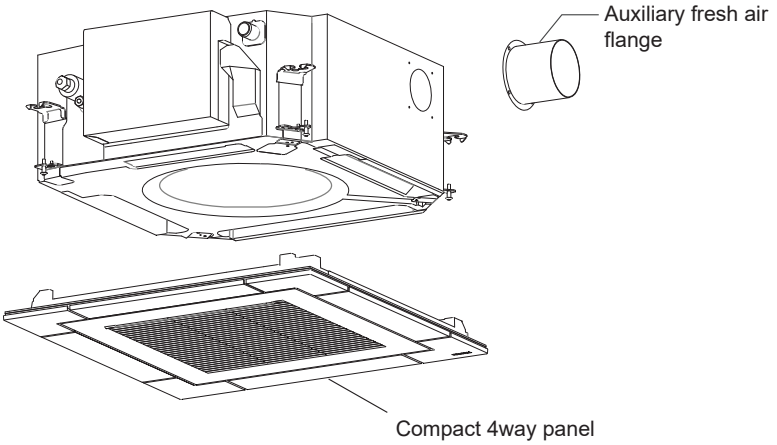

Compact 4way panel
RBC-UM21P-E

(White)

RBC-UM21PB-E

(Black)

No		Type	Model Name	Qty/unit
1	1.1	Compact 4way panel (White)	RBC-UM21P-E	1
	1.2	Compact 4way panel (Black)	RBC-UM21PB-E	1
2		Auxiliary fresh air flange	TCB-FF101URE2	1
3	3.1	Wireless RC (White)	RBC-AXU31UMP-E	1
		Wireless RC (Black)	RBC-AXU31UMPB-E	1
		Occupancy sensor kit	TCB-SIR41UMP-E	1
	3.2	Standard wired remote controller	RBC-ASCU11-E	1
	3.3	Wired remote controller	RBC-AMTU31-E	1
	3.4	Premium wired remote controller with bluetooth	RBC-AWSU52-E	1
		Premium wired remote without bluetooth	RBC-AMSU52-E	1

Combination pattern			Compact 4way panel (White) RBC-UM21P-E	Compact 4way panel (Black) RBC-UM21PB-E	Wireless RC (White) RBC-AXU31UMP-E	Wireless RC (Black) RBC-AXU31UMPB-E	Occupancy sensor kit TCB-SIR41UMP-E	Standard wired remote controller RBC-ASCU11-E	Wired remote controller RBC-AMTU31-E	Premium wired remote controller with bluetooth RBC-AWSU52-E	Premium wired remote without bluetooth RBC-AMSU52-E	Auxiliary fresh air flange TCB-FF101URE2
Ceiling Panel	Compact 4way panel (White)	RBC-UM21P-E			OK		OK	OK	OK	OK	OK	OK
	Compact 4way panel (Black)	RBC-UM21PB-E				OK		OK	OK	OK	OK	OK
Wireless RC (White)		RBC-AXU31UMP-E	OK				OK	OK	OK	OK	OK	OK
Wireless RC (Black)		RBC-AXU31UMPB-E		OK				OK	OK	OK	OK	OK
Occupancy sensor kit		TCB-SIR41UMP-E	OK		OK			OK	OK	OK	OK	OK
Standard wired remote controller		RBC-ASCU11-E	OK	OK	OK	OK	OK		OK	OK	OK	OK
Wired remote controller		RBC-AMTU31-E	OK	OK	OK	OK	OK	OK		OK	OK	OK
Premium wired remote controller with bluetooth		RBC-AWSU52-E	OK	OK	OK	OK	OK	OK	OK		OK	OK
Premium wired remote without bluetooth		RBC-AMSU52-E	OK	OK	OK	OK	OK	OK	OK	OK		OK
Auxilary fresh air flange		TCB-FF101URE2	OK	OK	OK	OK	OK	OK	OK	OK	OK	

Appendix

1.Ceiling Panel

1.1 Compact 4way panel (white) : RBC-UM21P-E

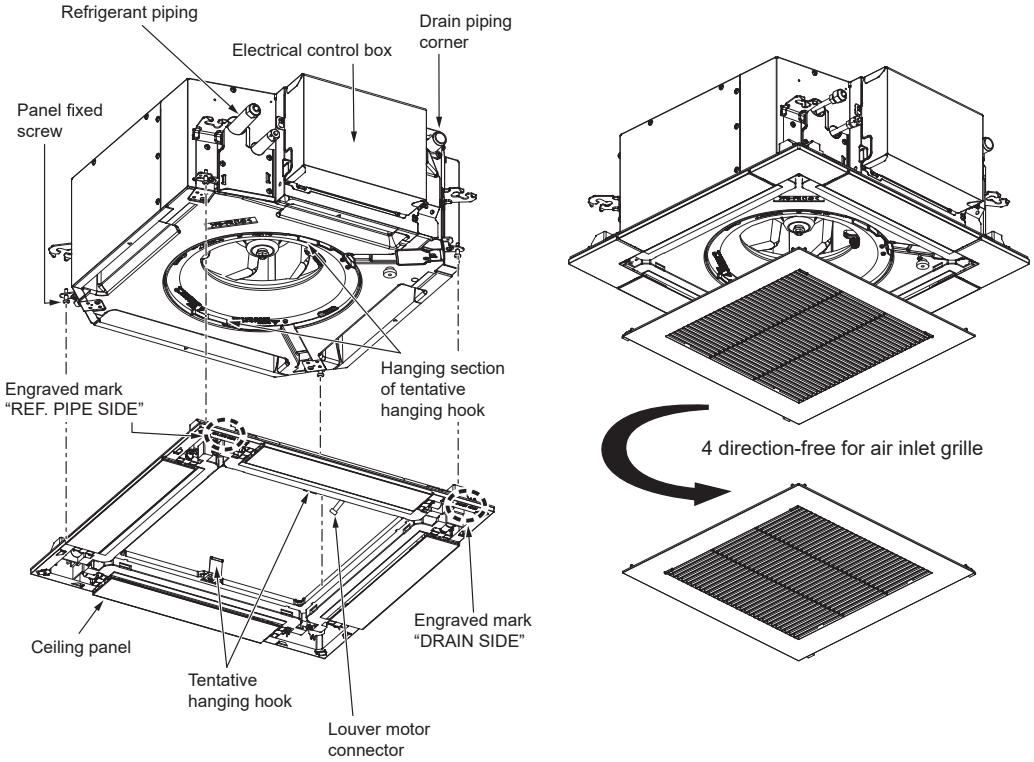

Wireless RC (White) : TCB-AXU31UMP-E	Occupancy sensor kit : TCB-SIR41UMP-E
	

1.2 Compact 4way panel (Black) : RBC-UM21PB-E

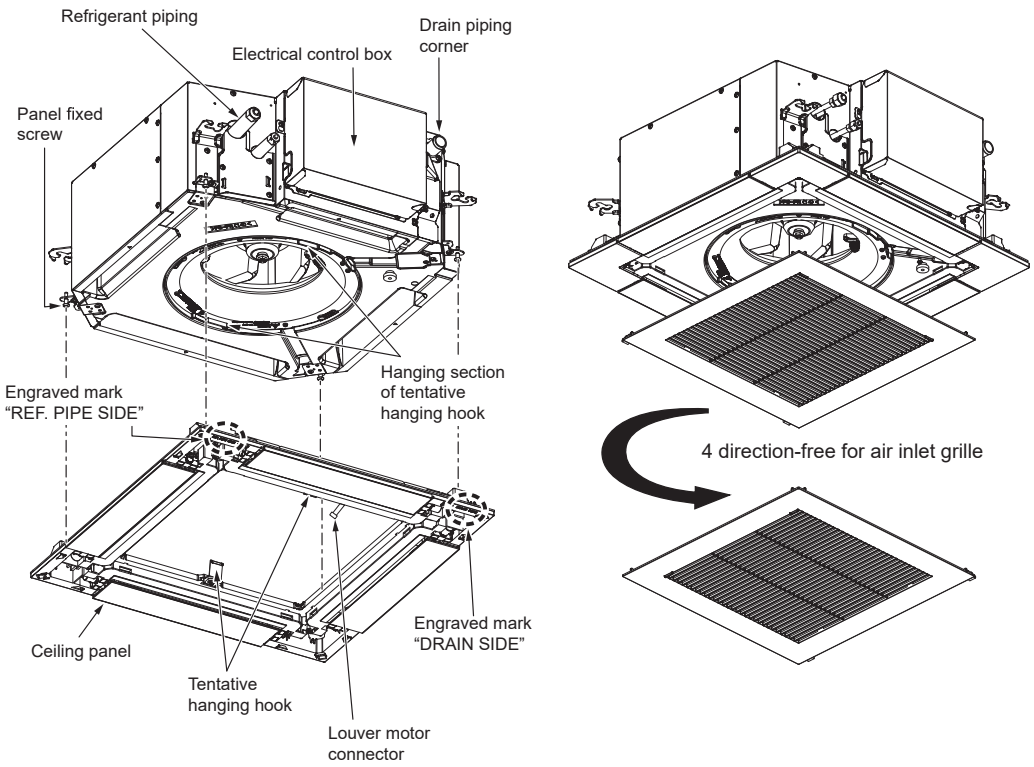

Wireless RC (Black) : TCB-AXU31UMPB-E

2.Auxiliary fresh air flange : TCB-FF101URE2

Installation

1. Using the knockout of the indoor unit main body, as a marker, cut off the flange with the heat insulator (styrol) with cutting pliers or cutter.

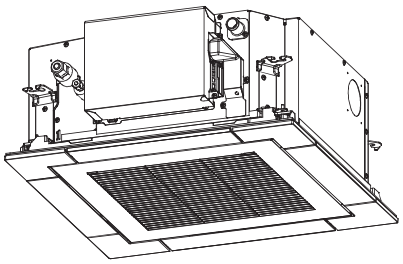

NOTE

When cutting off the styrol inside, be careful not to insert the cutter blade deeper than 30 mm. (Damage to the drain pan inside can cause water leakage.)
Wear safety globes to carry out these works. Do not attempt with bare hands.

2. A gap between the styrol and steel plate may cause a trouble such as condensation. Be sure to attach the attached heat insulator A first with it aligned to the screw hole, and then attach B, according to the right figure.
3. Install the auxiliary fresh air flange to the indoor unit main body with attached 4 fixing screws.

Duct fan

In order to take fresh air, provide the duct fan separately.

1. Install the filter for fresh air
2. Provide the check port beneath the duct fan for maintenance.
3. Provide the silencer to prevent the effect of noise.

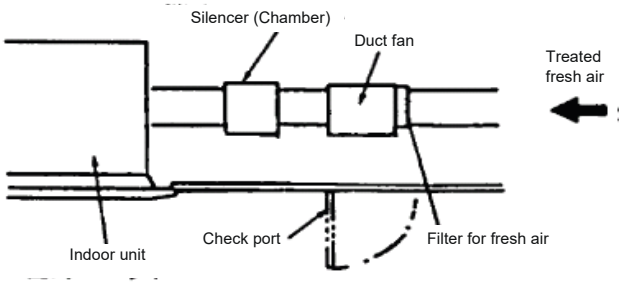

Dimension

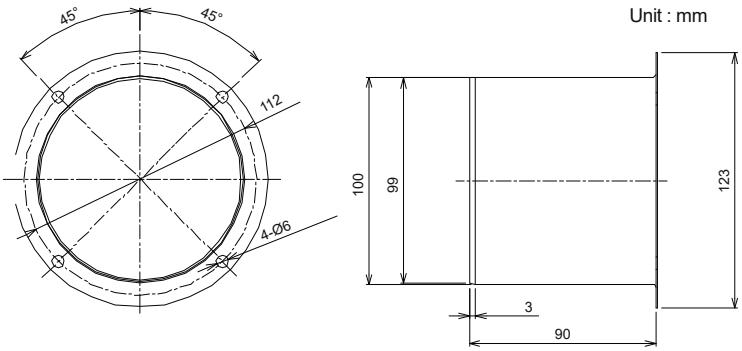

Installation

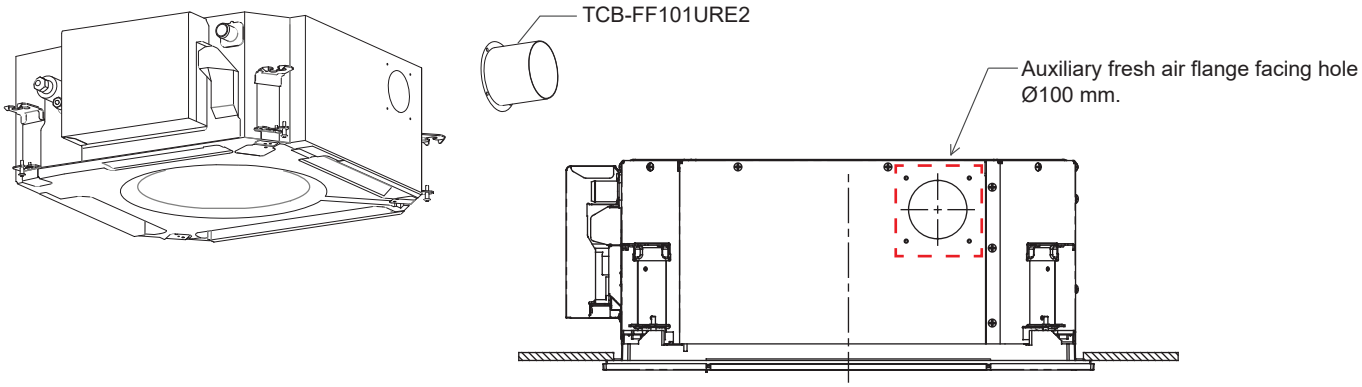

Caution

The fresh air shall be conditioned by a heat reclaim ventilator or similar.
Ensure the fresh air volume is determined so that mixed suction air and fresh air can maintain the operating temperature.
*1.Recommended conditioned air temperature is 12 °C to 30 °C.
However, Make a fresh air volume within 2% of standard.

Model name		RAV-HM561MUTP-E
Standard air flow	m^3/h	798

Install a filter within the fresh air duct.
(Fresh air does not pass through the filter of Indoor unit.)
Insulate the fresh air duct.
Electrically connect the fan of the Heat exchanger unit and the Indoor unit to a single isolator.

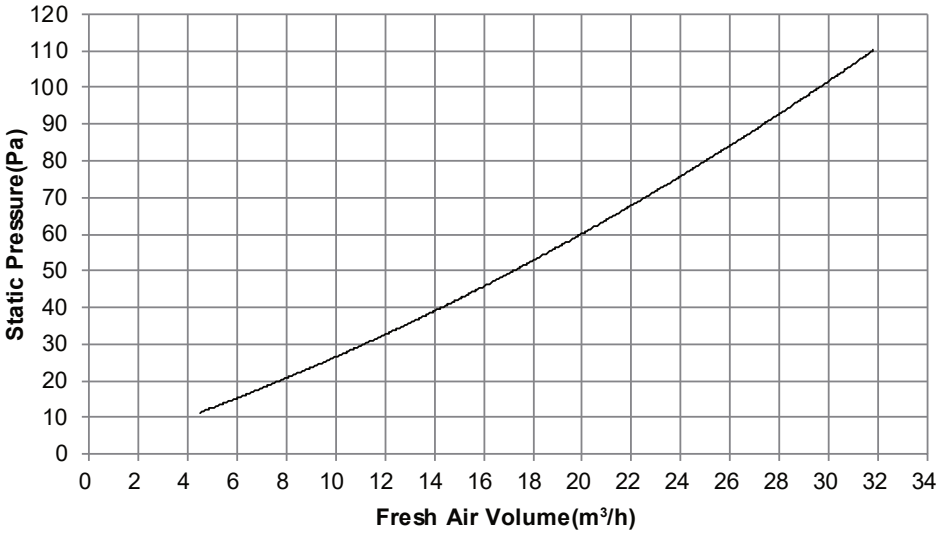

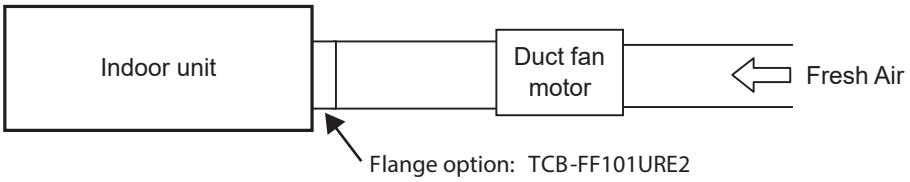

Inter - lock circuit

Connect the driving relay of the duct fan(DC 12V) between 1 and 6 on the indoor P.C. board.
(Rated current of the relay for duct fan should be up to 75mA.)
After installation, carry out a test run to check that the duct fan of the indoor unit start/stop simultaneously.
(Carry out the test run following the installation manual of the indoor unit.)

Branching duct (design guide)

Cover method

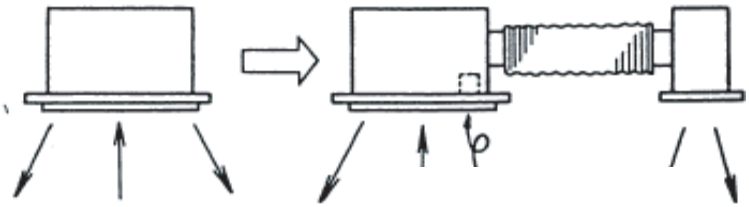

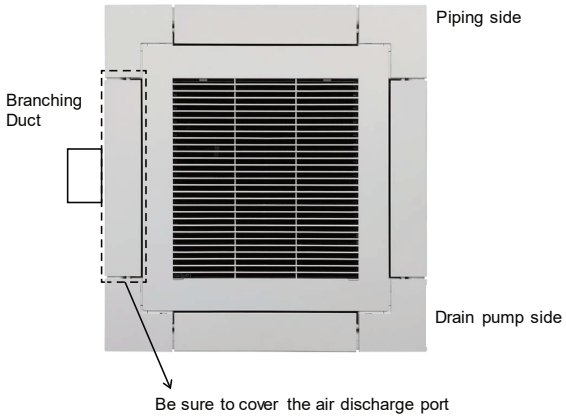

Dimension

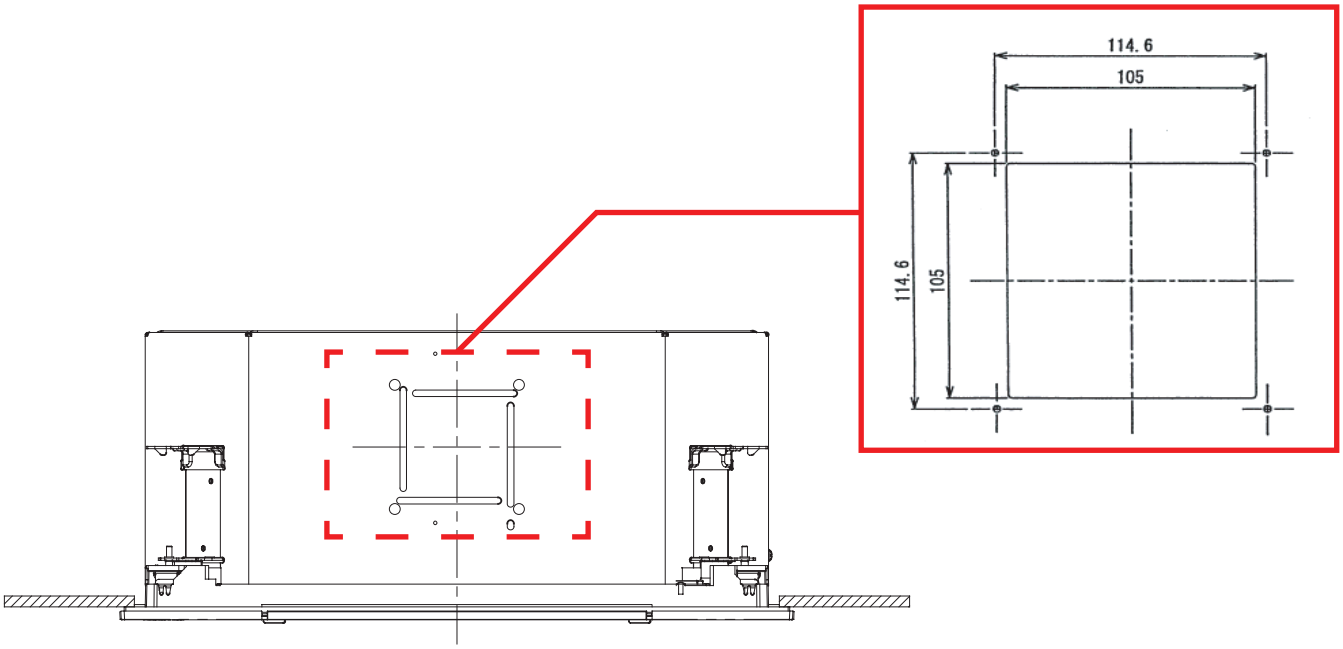

3.Remote controller

3.1 Wireless RC (White / Black) : RBC-AXU31UMP-E / RBC-AXU31UMPB-E

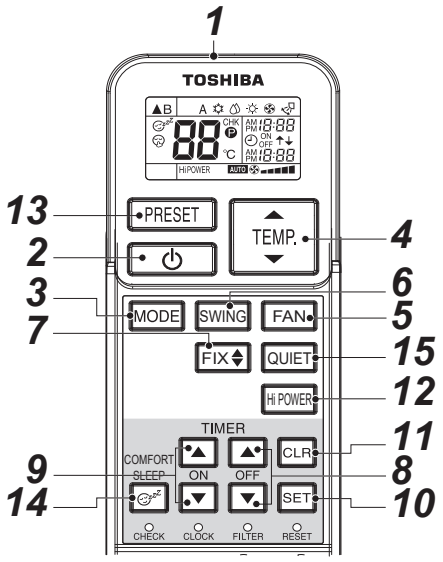

1 Infrared signal emitter

Transmits a signal to the indoor unit.

2 START/STOP button

Press the button to start operation.
(A receiving beep is heard.)
Press the button again to stop operation.
(A receiving beep is heard.)
If no receiving sound is heard from the indoor unit, press the button twice.

3 Mode select button (MODE)

Press this button to select a mode.
Each time you press the button, a mode is selected in a sequence that goes from A : Auto, : Cool, : Dry, : Heat, : Fan only, and back to A.
(A receiving beep is heard.)

4 Temperature button ( )

TEMP. ..... The set temperature is increased up to 30°C.

TEMP. ..... The set temperature is dropped down to 17°C. (A receiving beep is heard.)

5 Fan speed button (FAN)

Press this button to select fan speed.
When you select AUTO, the fan speed is automatically adjusted according to the room temperature.

You can also manually select the desired fan speed from among five settings.
(LOW ■, LOW + ■■, MED ■■■, MED + ■■■■, HIGH ■■■■■)
(A receiving beep is heard.)

6 Auto louver button (SWING)

Press this button to swing the louver.
(A receiving beep is heard.)
Press the SWING button to stop the louver swinging.
(A receiving beep is heard.)

7 Set louver button (FIX)

Press this button to adjust the airflow direction.
(A receiving beep is heard.) While this FIX button is kept depressed, the receiving tone continuously sounds.

8 Off timer button (OFF)

Press this button to set the OFF timer.

9 On timer button (ON)

Press this button to set the ON timer.

10 Reserve button (SET)

Press this button to reserve time settings.
(A receiving beep is heard.)

11 Cancel button (CLR)

Press this button to cancel ON timer and OFF timer.
(A receiving beep is heard.)

12 High power button (Hi POWER)

Press this button to start the high power operation.
This function is not operated group control.

13 PRESET button

Press this button to change the operation mode to the preferred operation mode memorized previously. To memorize the operation mode, press this button for at least 3 seconds during the preferred operation mode. P is displayed and the operation mode is memorized.

14 COMFORT SLEEP button

Press this button to start the OFF timer operation that automatically adjusts the room temperature and the fan speed. You can select the OFF timer time from four durations (1, 3, 5 or 9 hours).
During group control operation, the set temperature and the fan speed are not automatically adjusted. Only off timer function is activated.

15 QUIET button

Press this button to start quiet operation.
Pressing this button again will restore normal operation.

Louvers position

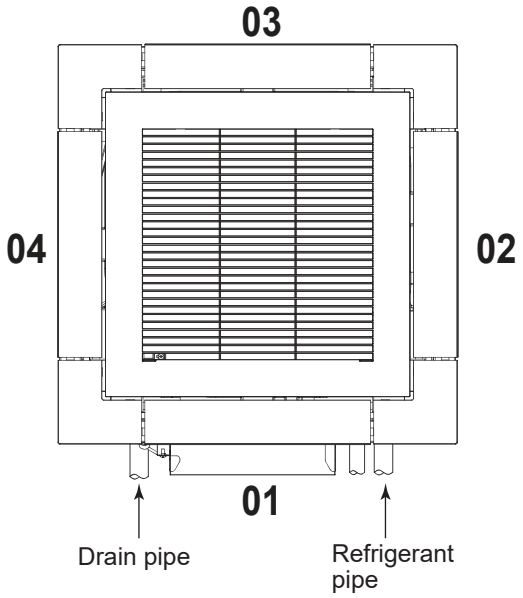

A position of the individual louvers (four directions) can be locked.

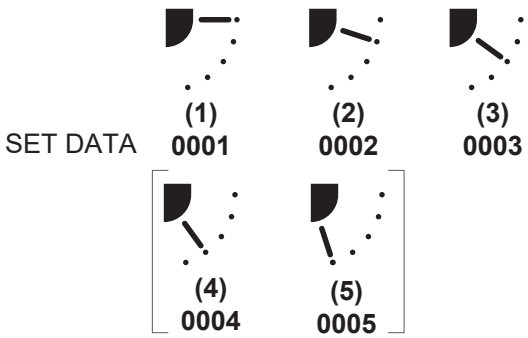

* When (4) or (5) is selected, dew drop may occur during cooling mode.

3.2 Standard wired remote controller : RBC-ASCU11-E

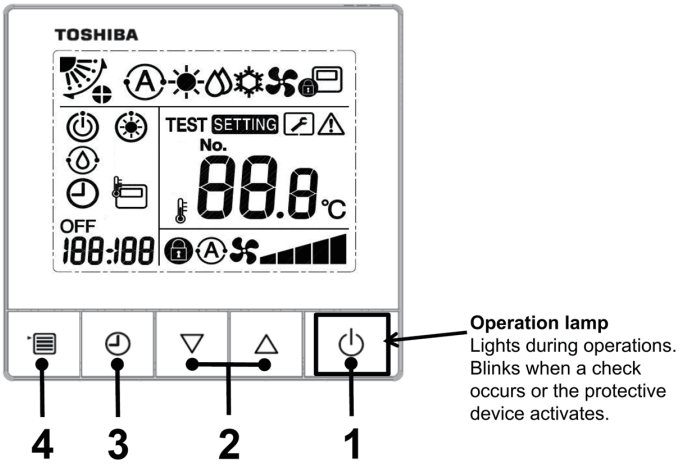

1 ON/OFF button

Press the button to turn on the air conditioner, and press the button again to turn off the air conditioner.

2 Setting button

It is used for temperature setting in general conditions. In running mode, fan speed mode and wind direction mode, it is used for the change of respective settings.

3 Timer off button

Set the timer off.

4 Menu button

It is used for the selection of the running mode, fan speed and wind direction.
Press of the button each time, then it will switch in the following order.

- In different modes of the indoor unit, the selection of fan speed or wind direction may be omitted.

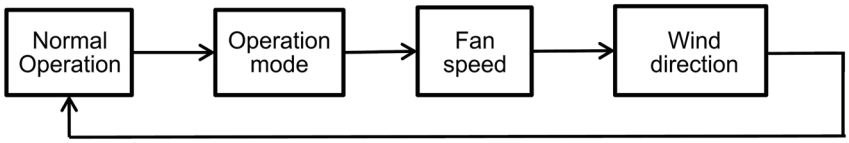

3.3 Wired remote controller : RBC-AMTU31-E

■ Operations

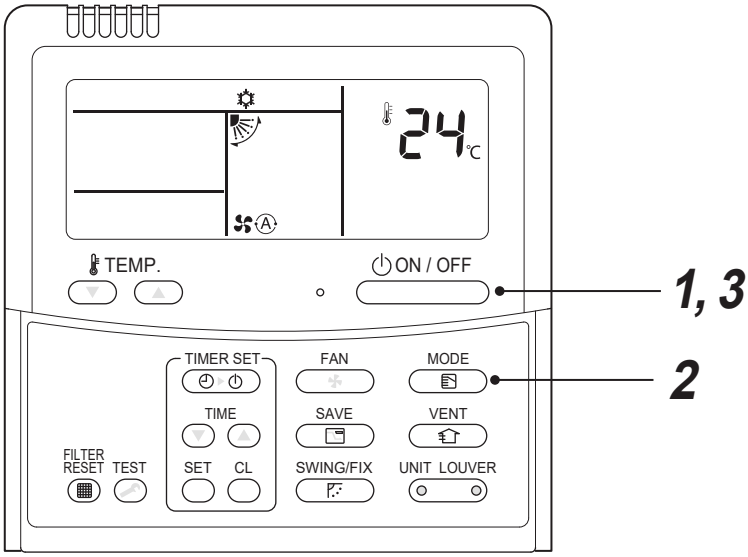

1 **Push the ON / OFF button.**
The operation lamp lights up.

2 **Push the MODE button to select a operation mode.**
Each time you push the button, the operation mode and its icon change in the following order:

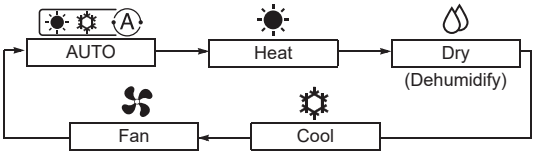

Depending on the type of unit connected, the operation modes that cannot be set will not be displayed.

3 **Push the ON / OFF button to stop running.**
The operation lamp turns off.

■ Changing the fan speed

Push the FAN button to select a fan speed.

- Each time you push the button, fan speed and its indication change in the following order: (“ Auto” cannot be selected in the FAN mode.)

* The available fan speeds vary depending on the indoor unit connected.

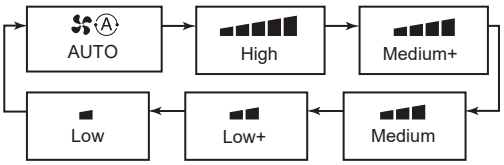

- The temperature sensor detects the return air temperature at the indoor unit, which may slightly differ from the actual room temperature depending on installation condition. Set temperature is a target of room temperature.

3.4 Premium wired remote controller with/without bluetooth : RBC-AWSU52-E / RBC-AMSU52-E

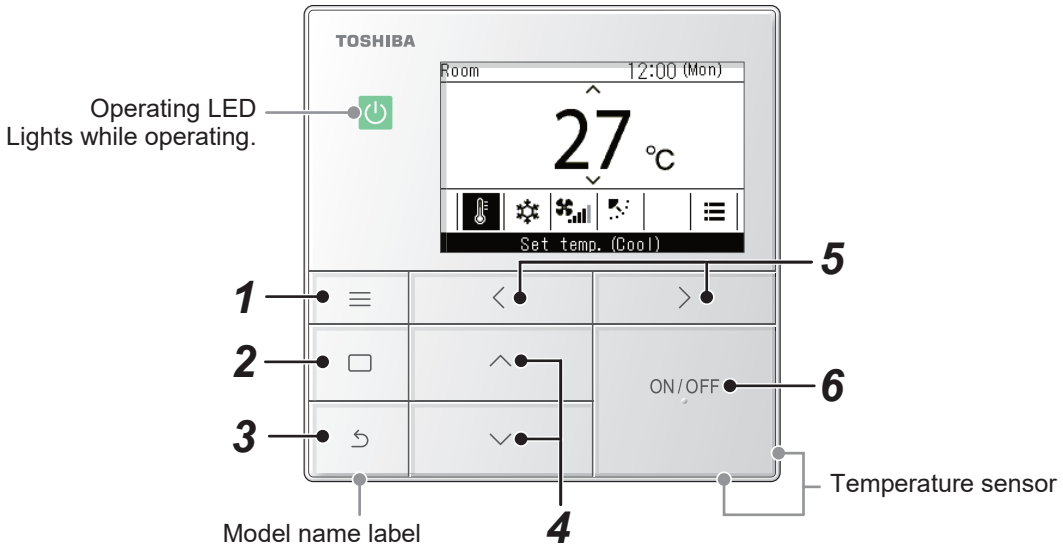

* The screens shown here are examples. The content that is displayed may differ, depending on the environment settings being used.

1 [≡ Menu] button
Shows the “Menu”.
(Page 17)

2 [▭ Set/Fix] button
Fixes and applies settings.
Ways to use it are shown on screen.

3 [↩ Return] button
Deletes selections.
Ways to use it are shown on screen.

4 [∧] and [∨] buttons
Changes settings and selects items.

5 [<] and [>] buttons
Selects setting items.
Other ways to use it are shown on screen.

6 [ON/OFF ON/OFF] button
Starts and stops connected devices.

2-3. Slim Duct Type

2-3-1. Specifications

2-3-2. Dimension

2-3-3. Wiring Diagrams

2-3-4. Sensible Capacity Table

2-3-5. Part Load Performance

2-3-6. Fan Static Characteristic

2-3-7. Sound Characteristics (NC Curve)

2-3-1. Specifications

Slim Duct Type <Single Type>

Model		Indoor unit		RAV- HM301SDT-E/TR	RAV- HM401SDT-E/TR	RAV-HM561SDT-E/TR
		Outdoor unit	(RAV-GM***ATJP-E)	RAV-GM301ATP-E/TR	RAV-GM401ATP-E/TR	RAV-GM561ATP-E1/TR1
Cooling capacity			(kW)	2.5 < 0.9-3.0 >	3.6 < 0.9-4.0 >	5.0 < 1.5 - 5.6 >
Heating capacity			(kW)	3.4 < 0.8-4.5 >	4.0 < 0.8-5.0 >	5.3 < 1.5 - 6.3 >
Power supply				1 phase 220V-240V/50Hz, 1phase 220V/60Hz		
Electrical characteristics	Cooling	Running current	(A)	2.82-2.60	4.60-4.20	8.95 - 8.20
		Power consumption	(kW)	0.56	0.93	1.91
		Power factor	(%)	90	92	97
		EER		4.46	3.87	2.62
		SEER		6.29	5.86	5.14
	Heating	Running current	(A)	4.20-3.85	4.75-4.35	7.03 - 6.44
		Power consumption	(kW)	0.86	0.97	1.50
		Power factor	(%)	93	93	97
		COP		3.95	4.12	3.53
		SCOP		4.60	4.01	4.16
	Maximum current		(A)	7.85	9.15	15.5
Indoor unit						
Appearance		Main unit		Zinc hot dipping steel plate		
Outer dimension		Main unit	Height (mm)	210		
			Width (mm)	845		
			Depth (mm)	645		
Total weight		Main unit	(kg)	22		
Fan unit		Fan		Centrifugal fan		
		Standard air flow	H/M/L (m3/h)	660 / 560 / 480	690 / 600 / 522	780 / 678 / 582
		Motor	(W)	60		
Extarnal static pressure		Standard (Upper - Lower)	(Pa)	5-15-30-45	5-15-30-45	4-14-29-44
Air filter				Standard filter (Long life filter)		
Sound pressure level			H/M/L (dB)	39 / 36 /33		45 / 40 / 36
Sound power level			H/M/L (dB)	54 / 51 /48		60 / 55 / 51
Connecting pipe		Drain port		VP25		
Outdoor unit						
Air Flow			(m3/h)	1800	2200	2,400
Outer dimension		Height	(mm)	550		
		Width	(mm)	780		
		Depth	(mm)	290		
Total weight		Main unit	(kg)	33	39	40
Pipe		Min. length	(m)	2.0		5.0
		Max. total length	(m)	20.0		30.0
Flare Connections		Gas side	(mm)	9.5	12.7	
		Liquid side	(mm)	6.4	6.4	
Sound pressure level		Cooling/Heating	(dB)	46 / 47	49 / 50	46 / 48
Sound power level		Cooling/Heating	(dB)	61 / 62	64 / 65	63 / 65
Operating Range		Cooling	(°C)	-15 / 46		
		Heating	(°C)	-15 / 15		

*1 : The cooling capacities and electrical characteristics are measured under the conditions specified by JIS B 8615 based on the reference piping. The reference piping consists of 5 m of main piping and 2.5 m of branch piping connected with 0 meter height.

*2 : The sound level are measured in an anechoic chamber in accordance with JIS B 8616. Normally, the values measured in the actual operating environment become larger than the indicated values due to the effects of external sound.

Note :

Rated conditions Cooling : Indoor air temperature 27°C DB/19°C WB, Outdoor air temperature 35°C DB
Heating : Indoor air temperature 20°C DB, Outdoor air temperature 7°C DB/6°C WB

Slim Duct (Twin System)

Model		**Indoor unit 1**		**RAV-HM561SDT-E/TR**
		Indoor unit 2		**RAV-HM561SDT-E/TR**
		Outdoor unit (RAV-GM***ATJP-E)		**RAV-GM1101ATP-E/TR**
Cooling capacity			(kW)	9.5 < 3.0 - 11.2 >
Heating capacity			(kW)	11.2 < 3.0 - 13.0 >
Power supply				1 phase 220V-240V/50Hz, 1phase 220V/60Hz
Electrical characteristics	Cooling	Running current	(A)	14.70-13.40
		Power consumption	(kW)	3.03
		Power factor	(%)	94
		EER		3.14
		SEER		5.32
	Heating	Running current	(A)	14.46 - 13.25
		Power consumption	(kW)	2.99
		Power factor	(%)	94
		COP		3.75
		SCOP		4.19
	Maximum current		(A)	22.8
Indoor unit				
Appearance	Main unit			Zinc hot dipping steel plate
Outer dimension	Main unit	Height	(mm)	210
		Width	(mm)	845
		Depth	(mm)	645
Total weight	Main unit		(kg)	22
Fan unit	Fan			Centrifugal fan
	Standard air flow	H/M/L	(m3/h)	780 / 678 / 582
	Motor		(W)	60
Extarnal static pressure	Standard (Upper - Lower)		(Pa)	4-14-29-44
Air filter				Long life filter
Sound pressure level		H/M/L	(dB)	45 / 40 / 36
Sound power level		H/M/L	(dB)	60 / 55 / 51
Connecting pipe	Drain port			VP25
Outdoor unit				
Air Flow			(m3/h)	4,080
Outer dimension	Height		(mm)	890
	Width		(mm)	900
	Depth		(mm)	320
Total weight	Main unit		(kg)	68
Pipe	Min. length		(m)	5
	Max. total length		(m)	50
Flare Connections	Main	Gas	(mm)	15.9
		Liquid	(mm)	9.5
	Branch	Gas	(mm)	12.7
		Liquid	(mm)	6.4
Sound pressure level	Cooling / Heating		(dB)	54 / 57
Sound power level	Cooling/Heating		(dB)	70 / 74
Operating Range	Cooling		(°C)	-15 / 46
	Heating		(°C)	-15 / 15

*1 : The cooling capacities and electrical characteristics are measured under the conditions specified by JIS B 8615 based on the reference piping. The reference piping consists of 5 m of main piping and 2.5 m of branch piping connected with 0 meter height.

*2 : The sound level are measured in an anechoic chamber in accordance with JIS B 8616. Normally, the values measured in the actual operating environment become larger than the indicated values due to the effects of external sound.

Note :

Rated conditions Cooling : Indoor air temperature 27°C DB/19°C WB, Outdoor air temperature 35°C DB
Heating : Indoor air temperature 20°C DB, Outdoor air temperature 7°C DB/6°C WB

2-3-2. Dimension

RAV-HM301SDT-E/TR

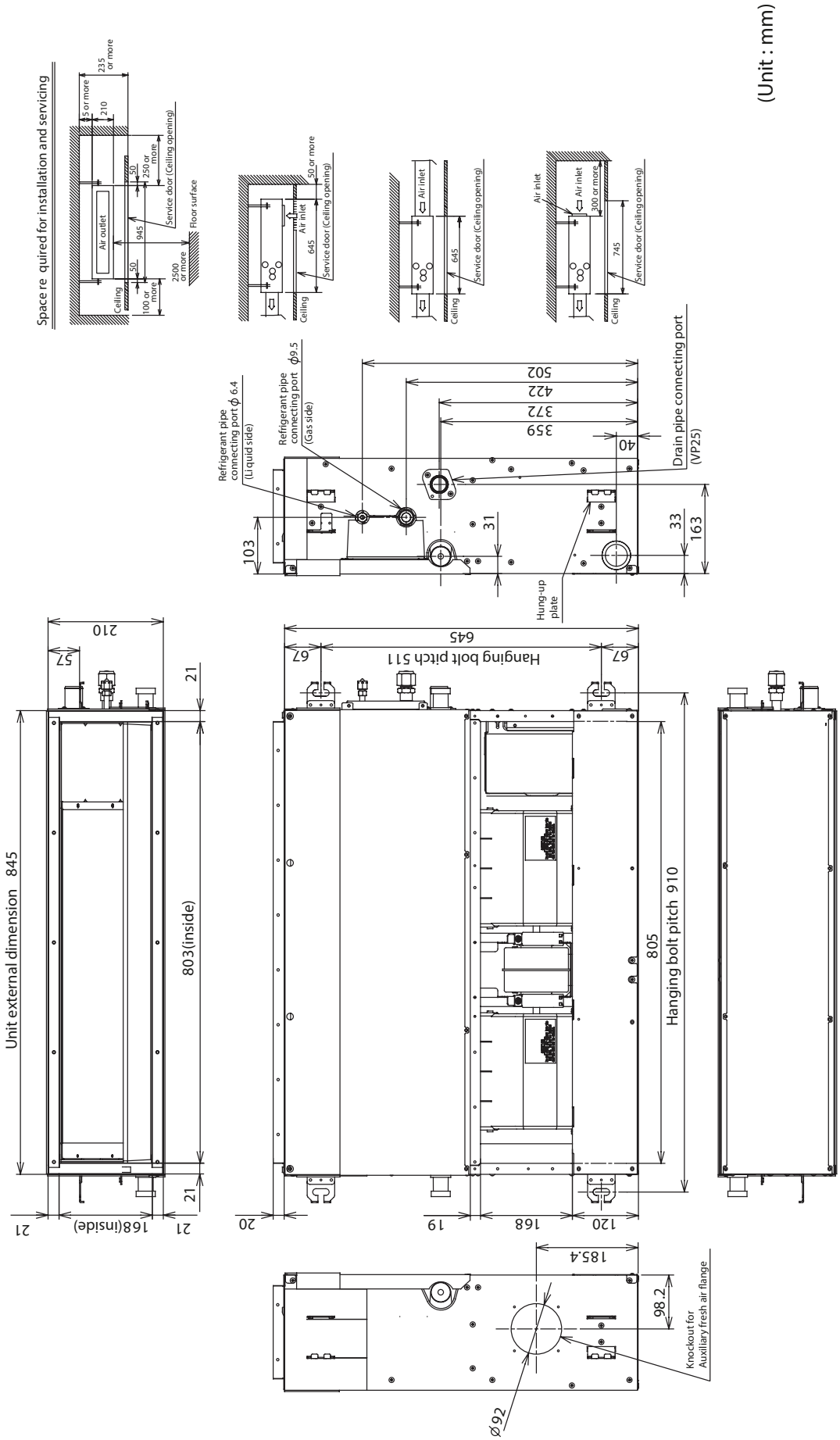

RAV-HM401SDT-E/TR, RAV-HM561SDT-E/TR

(Unit : mm)

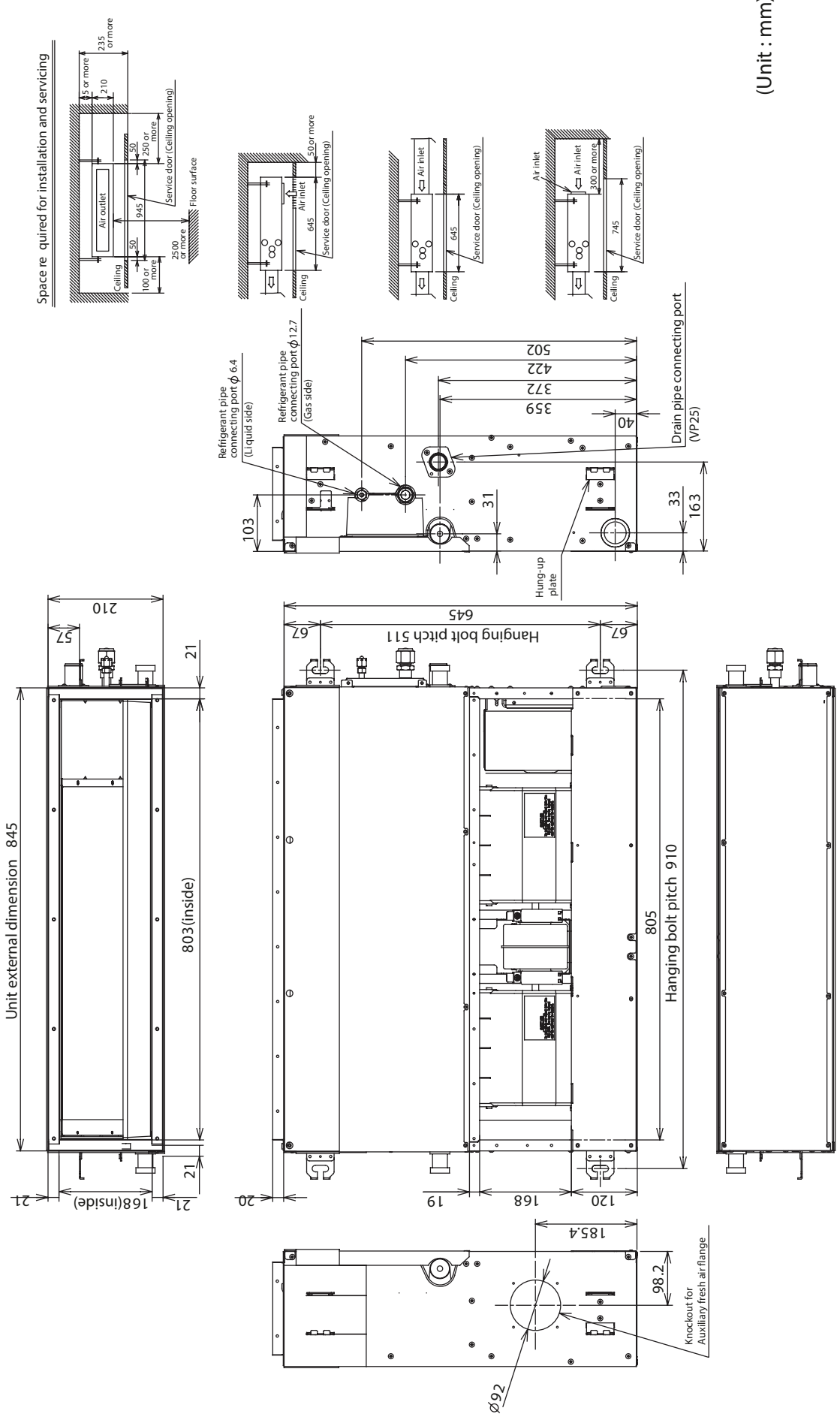

2-3-3. Wiring Diagrams

RAV-HM301SDT-E/TR, RAV-HM401SDT-E/TR, RAV-HM561SDT-E/TR

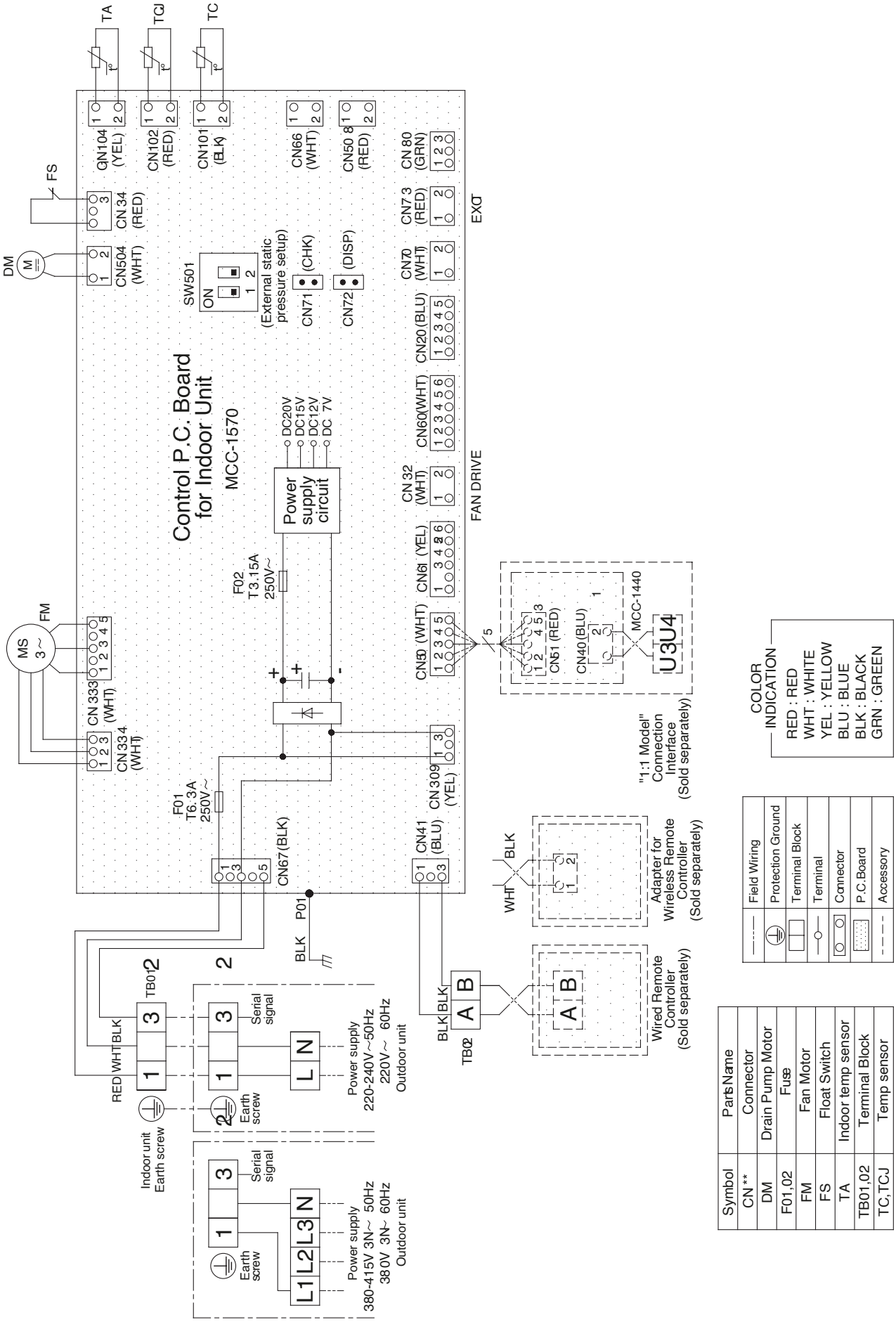

2-3-4. Sensible Capacity Table

Digital Inverter R32 Sensible Heat Capacity : RAV-HM***SDT-E/TR

unit size	outdoor air temp. CDB	indoor air temp. 14.0CWB 20.0CDB		15.0CWB 21.5CDB		16.0CWB 23.0CDB		17.0CWB 24.5CDB		18.0CWB 26.0CDB		19.0CWB 27.0CDB		20.0CWB 28.0CDB		22.0CWB 30.0CDB		24.0CWB 32.0CDB	
		TC	SHC	TC	SHC	TC	SHC	TC	SHC	TC	SHC	TC	SHC	TC	SHC	TC	SHC	TC	SHC
301	10.0	2.46	2.10	2.55	2.15	2.72	2.24	2.78	2.28	2.91	2.38	3.00	2.37	3.08	2.37	3.26	2.35	3.41	2.30
	12.0	2.44	2.08	2.52	2.13	2.69	2.21	2.75	2.26	2.88	2.35	2.97	2.35	3.05	2.35	3.23	2.32	3.38	2.28
	14.0	2.41	2.06	2.49	2.10	2.66	2.19	2.72	2.24	2.85	2.33	2.93	2.32	3.02	2.32	3.20	2.30	3.34	2.25
	16.0	2.38	2.03	2.47	2.08	2.63	2.17	2.69	2.21	2.82	2.30	2.90	2.30	2.98	2.30	3.16	2.27	3.30	2.23
	18.0	2.35	2.01	2.44	2.05	2.60	2.14	2.66	2.18	2.78	2.27	2.87	2.27	2.95	2.27	3.12	2.25	3.26	2.20
	20.0	2.32	1.98	2.41	2.03	2.57	2.11	2.63	2.16	2.75	2.25	2.83	2.24	2.91	2.24	3.08	2.22	3.22	2.17
	21.0	2.31	1.97	2.39	2.01	2.55	2.10	2.61	2.14	2.73	2.23	2.81	2.23	2.89	2.22	3.06	2.20	3.20	2.16
	23.0	2.28	1.94	2.36	1.99	2.51	2.07	2.57	2.11	2.69	2.20	2.77	2.19	2.85	2.19	3.02	2.17	3.16	2.13
	25.0	2.24	1.91	2.32	1.95	2.47	2.03	2.53	2.08	2.65	2.16	2.73	2.16	2.80	2.16	2.97	2.13	3.10	2.09
	27.0	2.21	1.88	2.28	1.93	2.44	2.01	2.50	2.05	2.61	2.13	2.69	2.13	2.76	2.13	2.93	2.11	3.06	2.06
	29.0	2.17	1.85	2.25	1.89	2.40	1.97	2.46	2.02	2.57	2.10	2.64	2.09	2.72	2.09	2.88	2.07	3.01	2.03
	31.0	2.13	1.82	2.21	1.86	2.36	1.94	2.41	1.98	2.52	2.06	2.60	2.06	2.67	2.06	2.83	2.04	2.96	2.00
	33.0	2.10	1.79	2.17	1.83	2.31	1.90	2.37	1.95	2.48	2.02	2.55	2.02	2.62	2.02	2.78	2.00	2.91	1.96
	35.0	2.05	1.75	2.12	1.79	2.27	1.87	2.32	1.91	2.43	1.98	2.50	1.98	2.57	1.98	2.72	1.96	2.85	1.92
	37.0	2.01	1.72	2.08	1.76	2.22	1.83	2.28	1.87	2.38	1.95	2.45	1.94	2.52	1.94	2.67	1.92	2.79	1.88
	39.0	1.97	1.68	2.04	1.72	2.18	1.79	2.23	1.83	2.33	1.91	2.40	1.90	2.47	1.90	2.61	1.88	2.73	1.84

unit size	outdoor air temp. CDB	indoor air temp. 14.0CWB 20.0CDB		15.0CWB 21.5CDB		16.0CWB 23.0CDB		17.0CWB 24.5CDB		18.0CWB 26.0CDB		19.0CWB 27.0CDB		20.0CWB 28.0CDB		22.0CWB 30.0CDB		24.0CWB 32.0CDB	
		TC	SHC	TC	SHC	TC	SHC	TC	SHC	TC	SHC	TC	SHC	TC	SHC	TC	SHC	TC	SHC
401	10.0	3.54	3.02	3.67	3.09	3.91	3.22	4.01	3.29	4.19	3.42	4.31	3.42	4.44	3.41	4.70	3.38	4.92	3.31
	12.0	3.51	2.99	3.63	3.06	3.87	3.19	3.97	3.26	4.15	3.39	4.27	3.38	4.39	3.38	4.65	3.34	4.87	3.28
	14.0	3.47	2.96	3.59	3.03	3.83	3.15	3.92	3.22	4.10	3.35	4.23	3.35	4.35	3.34	4.60	3.31	4.81	3.24
	16.0	3.43	2.92	3.55	2.99	3.79	3.12	3.88	3.18	4.06	3.31	4.18	3.31	4.30	3.30	4.55	3.27	4.76	3.21
	18.0	3.39	2.89	3.51	2.96	3.74	3.08	3.83	3.14	4.01	3.27	4.13	3.27	4.24	3.26	4.50	3.23	4.70	3.17
	20.0	3.35	2.85	3.46	2.92	3.70	3.04	3.78	3.11	3.96	3.23	4.08	3.23	4.19	3.22	4.44	3.19	4.64	3.13
	21.0	3.32	2.83	3.44	2.90	3.67	3.02	3.76	3.08	3.93	3.21	4.05	3.20	4.16	3.20	4.41	3.17	4.61	3.11
	23.0	3.28	2.79	3.39	2.86	3.62	2.98	3.71	3.04	3.88	3.17	3.99	3.16	4.10	3.16	4.35	3.12	4.55	3.06
	25.0	3.22	2.75	3.34	2.81	3.56	2.93	3.64	2.99	3.81	3.11	3.92	3.11	4.04	3.10	4.27	3.07	4.47	3.01
	27.0	3.18	2.71	3.29	2.77	3.51	2.89	3.59	2.95	3.76	3.07	3.87	3.06	3.98	3.06	4.22	3.03	4.41	2.97
	29.0	3.13	2.67	3.24	2.73	3.45	2.84	3.54	2.90	3.70	3.02	3.81	3.01	3.92	3.01	4.15	2.98	4.34	2.92
	31.0	3.07	2.62	3.18	2.68	3.39	2.79	3.47	2.85	3.63	2.97	3.74	2.96	3.85	2.96	4.08	2.93	4.26	2.87
	33.0	3.02	2.57	3.12	2.63	3.33	2.74	3.41	2.80	3.57	2.91	3.67	2.91	3.78	2.91	4.00	2.88	4.19	2.82
	35.0	2.96	2.52	3.06	2.58	3.27	2.69	3.34	2.74	3.50	2.86	3.60	2.85	3.70	2.85	3.92	2.82	4.10	2.76
	37.0	2.90	2.47	3.00	2.53	3.20	2.64	3.28	2.69	3.43	2.80	3.53	2.80	3.63	2.79	3.85	2.77	4.02	2.71
	39.0	2.84	2.42	2.94	2.48	3.14	2.58	3.21	2.63	3.36	2.74	3.46	2.74	3.56	2.73	3.77	2.71	3.94	2.65

TC:Total Capacity [kW]
SHC:Sensible Heat Capacity [kW]

Product models : RAV-HM561SDT-E / TR

Specification of product at standard condition

Standard Condition		
	Indoor	27°C (DB) / 19°C (WB)
	Outdoor	35°C (DB) / 24°C (WB)

Total Cooling Capacity (TC)	5.00	kW
Sensible Heat Capacity (SHC)	3.60	kW

Outdoor air temperature	Indoor air temperature													
	20.0°C (DB) 14.0°C (WB)		23.0°C (DB) 16.0°C (WB)		26.0°C (DB) 18.0°C (WB)		27.0°C (DB) 19.0°C (WB)		28.0°C (DB) 20.0°C (WB)		30.0°C (DB) 22.0°C (WB)		32.0°C (DB) 24.0°C (WB)	
DB (°C)	TC	SHC	TC	SHC	TC	SHC	TC	SHC	TC	SHC	TC	SHC	TC	SHC
10	5.42	4.24	5.99	4.50	6.42	4.78	6.60	4.76	6.79	4.74	7.19	4.66	7.52	4.53
11	5.37	4.19	5.93	4.46	6.35	4.73	6.54	4.71	6.73	4.69	7.12	4.61	7.45	4.48
12	5.32	4.15	5.87	4.41	6.29	4.69	6.48	4.66	6.66	4.64	7.05	4.57	7.38	4.44
13	5.27	4.11	5.82	4.37	6.23	4.64	6.41	4.62	6.60	4.60	6.98	4.52	7.30	4.40
14	5.21	4.07	5.76	4.32	6.17	4.59	6.35	4.57	6.53	4.55	6.91	4.47	7.23	4.35
15	5.16	4.03	5.70	4.28	6.10	4.55	6.28	4.52	6.46	4.51	6.84	4.43	7.16	4.31
16	5.11	3.99	5.64	4.24	6.04	4.50	6.22	4.48	6.40	4.46	6.77	4.38	7.09	4.26
17	5.06	3.95	5.58	4.19	5.98	4.45	6.16	4.43	6.33	4.41	6.70	4.34	7.01	4.22
18	5.00	3.91	5.52	4.15	5.92	4.41	6.09	4.39	6.27	4.37	6.63	4.29	6.94	4.18
19	4.95	3.87	5.47	4.11	5.85	4.36	6.03	4.34	6.20	4.32	6.56	4.25	6.87	4.13
20	4.90	3.82	5.41	4.06	5.79	4.32	5.96	4.29	6.13	4.28	6.49	4.20	6.79	4.09
21	4.84	3.78	5.35	4.02	5.73	4.27	5.90	4.25	6.07	4.23	6.43	4.16	6.72	4.04
22	4.79	3.74	5.29	3.97	5.67	4.22	5.83	4.20	6.00	4.18	6.36	4.11	6.65	4.00
23	4.74	3.70	5.23	3.93	5.60	4.18	5.77	4.15	5.94	4.14	6.29	4.07	6.57	3.96
24	4.69	3.66	5.18	3.89	5.54	4.13	5.71	4.11	5.87	4.09	6.22	4.02	6.50	3.91
25	4.63	3.62	5.12	3.84	5.48	4.08	5.64	4.06	5.80	4.05	6.15	3.98	6.43	3.87
26	4.58	3.58	5.06	3.80	5.42	4.04	5.58	4.02	5.74	4.00	6.08	3.93	6.35	3.82
27	4.53	3.54	5.00	3.76	5.36	3.99	5.51	3.97	5.67	3.95	6.01	3.89	6.28	3.78
28	4.48	3.49	4.94	3.71	5.29	3.94	5.45	3.92	5.61	3.91	5.94	3.84	6.21	3.74
29	4.42	3.45	4.88	3.67	5.23	3.90	5.39	3.88	5.54	3.86	5.87	3.80	6.14	3.69
30	4.37	3.41	4.83	3.62	5.17	3.85	5.32	3.83	5.47	3.82	5.80	3.75	6.06	3.65
31	4.32	3.37	4.77	3.58	5.11	3.80	5.26	3.78	5.41	3.77	5.73	3.71	5.99	3.60
32	4.27	3.33	4.71	3.54	5.04	3.76	5.19	3.74	5.34	3.72	5.66	3.66	5.92	3.56
33	4.21	3.29	4.65	3.49	4.98	3.71	5.13	3.69	5.28	3.68	5.59	3.62	5.84	3.52
34	4.16	3.25	4.59	3.45	4.92	3.66	5.06	3.65	5.21	3.63	5.52	3.57	5.77	3.47
35	**4.11**	**3.21**	**4.54**	**3.41**	**4.86**	**3.62**	**5.00**	**3.60**	**5.14**	**3.59**	**5.45**	**3.52**	**5.70**	**3.43**
36	4.05	3.17	4.48	3.36	4.79	3.57	4.94	3.55	5.08	3.54	5.38	3.48	5.62	3.38
37	4.00	3.12	4.42	3.32	4.73	3.53	4.87	3.51	5.01	3.49	5.31	3.43	5.55	3.34
38	3.95	3.08	4.36	3.28	4.67	3.48	4.81	3.46	4.94	3.45	5.24	3.39	5.48	3.30
39	3.90	3.04	4.30	3.23	4.61	3.43	4.74	3.42	4.88	3.40	5.17	3.34	5.40	3.25
40	2.55	1.99	2.82	2.12	3.02	2.25	3.10	2.24	3.19	2.23	3.38	2.19	3.54	2.13
41	2.43	1.90	2.68	2.01	2.87	2.14	2.96	2.13	3.04	2.12	3.22	2.08	3.37	2.03
42	2.31	1.80	2.55	1.91	2.73	2.03	2.81	2.02	2.89	2.01	3.06	1.98	3.20	1.93
43	2.18	1.71	2.41	1.81	2.58	1.92	2.66	1.92	2.74	1.91	2.90	1.88	3.03	1.82
44	2.06	1.61	2.28	1.71	2.44	1.82	2.51	1.81	2.58	1.80	2.74	1.77	2.86	1.72
45	1.07	0.84	1.18	0.89	1.27	0.95	1.31	0.94	1.34	0.94	1.42	0.92	1.49	0.90
46	0.95	0.74	1.05	0.79	1.12	0.84	1.16	0.83	1.19	0.83	1.26	0.82	1.32	0.79

2-3-5. Part load performance

Combination

Indoor unit : RAV-HM301SDT-E/TR

Outdoor unit : RAV-GM301ATP-E/TR, RAV-GM301ATJP-E

	Cooling		Heating	
	Capacity Q (W)	Power consumption W (WX	Capacity Q (W)	Power consumption W (W)
Minimum	900	250	800	170
Rating	2500	560	3400	860

Q: Capacity in W
W: Power Consumption in W

Cooling

Outdoor temperature (°C)		Load (%)									
		100	90	80	70	60	50	40	30	20	10
40	Q	2320	2080	1850	1620	1390	1160	930	830	830	830
	W	610	550	480	430	370	330	280	270	270	270
35	Q	2500	2250	2000	1750	1500	1250	1000	900	900	900
	W	560	500	440	390	340	300	260	250	250	250
30	Q	2640	2370	2110	1840	1580	1320	1050	950	950	950
	W	500	450	400	350	310	270	230	230	230	230
25	Q	2730	2450	2180	1910	1640	1360	1090	980	980	980
	W	450	400	360	310	270	240	210	200	200	200
20	Q	2830	2550	2260	1980	1700	1420	1130	1020	1020	1020
	W	400	360	320	280	240	220	190	180	180	180

Heating

Outdoor temperature (°C)		Load (%)									
		100	90	80	70	60	50	40	30	20	10
15	Q	4100	3690	3280	2870	2460	2050	1640	1230	960	960
	W	970	850	750	620	510	410	320	230	190	190
10	Q	3660	3290	2930	2560	2200	1830	1460	1100	860	860
	W	900	790	690	580	470	380	290	210	180	180
7	Q	3400	3060	2720	2380	2040	1700	1360	1020	800	800
	W	860	750	660	550	450	360	280	200	170	170
5	Q	2580	2320	2060	1810	1550	1290	1030	770	610	610
	W	790	690	610	500	410	330	260	180	160	160
2	Q	2460	2210	1970	1720	1480	1230	980	740	580	580
	W	760	660	580	490	400	320	250	180	150	150
0	Q	2380	2140	1900	1670	1430	1190	950	710	560	560
	W	740	640	570	470	390	310	240	170	150	150
-5	Q	2180	1960	1740	1530	1310	1090	870	650	510	510
	W	690	600	530	440	360	290	220	160	140	140
-7	Q	2100	1890	1680	1470	1260	1050	840	630	490	490
	W	670	580	510	430	350	280	220	160	130	130
-10	Q	1910	1720	1530	1340	1150	960	760	570	450	450
	W	640	560	490	410	330	270	210	150	130	130
-15	Q	1470	1320	1180	1030	880	740	590	440	350	350
	W	570	490	430	360	300	240	180	130	110	110

Combination

Indoor unit : RAV-HM401SDT-E/TR

Outdoor unit : RAV-GM401ATP-E/TR, RAV-GM401ATJP-E

	Cooling		Heating	
	Capacity Q (W)	Power consumption W (W)	Capacity Q (W)	Power consumption W (W)
Minimum	900	180	800	140
Rating	3600	930	4000	970

Q: Capacity in W
W: Power Consumption in W

Cooling

Outdoor temperature (°C)		Load (%)									
		100	90	80	70	60	50	40	30	20	10
40	Q	3330	3000	2670	2330	2000	1670	1330	1000	830	830
	W	1020	890	750	640	520	420	320	230	200	200
35	Q	3600	3240	2880	2520	2160	1800	1440	1080	900	900
	W	930	810	690	590	480	380	290	210	180	180
30	Q	3790	3410	3040	2660	2280	1900	1520	1140	950	950
	W	840	730	620	530	430	340	260	190	160	160
25	Q	3920	3530	3140	2750	2350	1960	1570	1180	980	980
	W	750	650	560	480	390	310	230	170	150	150
20	Q	4080	3670	3260	2850	2450	2040	1630	1220	1020	1020
	W	670	580	500	430	350	270	210	150	130	130

Heating

Outdoor temperature (°C)		Load (%)									
		100	90	80	70	60	50	40	30	20	10
15	Q	4820	4340	3860	3380	2890	2410	1930	1450	960	960
	W	1100	900	770	630	510	400	290	200	160	160
10	Q	4310	3880	3440	3010	2580	2150	1720	1290	860	860
	W	1020	840	710	590	470	370	270	190	150	150
7	Q	4000	3600	3200	2800	2400	2000	1600	1200	800	800
	W	970	800	680	560	450	350	260	180	140	140
5	Q	3040	2730	2430	2120	1820	1520	1210	910	610	610
	W	890	730	620	510	410	320	240	170	130	130
2	Q	2890	2600	2320	2030	1740	1450	1160	870	580	580
	W	860	710	600	490	400	310	230	160	120	120
0	Q	2800	2520	2240	1960	1680	1400	1120	840	560	560
	W	830	690	580	480	390	300	220	150	120	120
-5	Q	2560	2310	2050	1800	1540	1280	1030	770	510	510
	W	780	640	540	450	360	280	210	140	110	110
-7	Q	2470	2220	1980	1730	1480	1240	990	740	490	490
	W	750	620	530	430	350	270	200	140	110	110
-10	Q	2250	2020	1800	1570	1350	1120	900	670	450	450
	W	720	590	500	420	330	260	190	130	100	100
-15	Q	1730	1560	1380	1210	1040	860	690	520	350	350
	W	640	530	450	370	300	230	170	120	90	90

Combination

Indoor unit : RAV-HM561SDT-E/TR

Outdoor unit : RAV-GM561ATP-E1/TR1, RAV-GM561ATJP-E1

	Cooling		Heating	
	Capacity Q (W)	Power consumption W (W)	Capacity Q (W)	Power consumption W (W)
Minimum	1500	320	1500	320
Rating	5000	1910	5300	1500

Q: Capacity in W
W: Power Consumption in W

Cooling

Outdoor temperature (°C)		Load (%)									
		100	90	80	70	60	50	40	30	20	10
40	Q	4630	4170	3710	3240	2780	2320	1850	1390	1390	1390
	W	2090	1670	1330	1060	840	650	480	350	350	350
35	Q	5000	4500	4000	3500	3000	2500	2000	1500	1500	1500
	W	1910	1520	1220	970	770	590	430	320	320	320
30	Q	5270	4750	4220	3690	3170	2640	2110	1580	1580	1580
	W	1720	1370	1100	870	690	530	400	290	290	290
25	Q	5510	4960	4400	3850	3310	2760	2200	1650	1650	1650
	W	1540	1230	990	780	620	480	360	260	260	260
20	Q	5660	5090	4530	3960	3400	2830	2260	1700	1700	1700
	W	1380	1100	880	700	550	430	320	230	230	230

Heating

Outdoor temperature (°C)		Load (%)									
		100	90	80	70	60	50	40	30	20	10
15	Q	6330	5700	5070	4430	3800	3170	2540	1900	1790	1790
	W	1580	1350	1130	920	730	580	450	350	340	340
10	Q	5750	5170	4600	4020	3450	2880	2300	1720	1630	1630
	W	1530	1310	1090	890	700	560	440	340	330	330
7	Q	5300	4770	4240	3710	3180	2650	2120	1590	1500	1500
	W	1500	1280	1070	870	690	550	430	330	320	320
5	Q	4080	3670	3270	2860	2450	2040	1640	1220	1160	1160
	W	1290	1100	920	750	590	470	370	280	270	270
2	Q	3990	3590	3190	2790	2390	2000	1600	1200	1130	1130
	W	1270	1080	900	740	580	470	360	280	270	270
0	Q	3930	3540	3150	2750	2360	1970	1580	1180	1110	1110
	W	1260	1070	900	730	580	460	360	280	270	270
-5	Q	3790	3410	3030	2650	2270	1900	1520	1140	1070	1070
	W	1230	1050	870	710	560	450	350	270	260	260
-7	Q	3730	3360	2990	2610	2240	1870	1500	1120	1060	1060
	W	1220	1040	870	700	560	450	350	270	260	260
-10	Q	3440	3100	2760	2410	2070	1720	1380	1030	980	980
	W	1170	1000	830	680	540	430	340	260	250	250
-15	Q	2650	2390	2120	1860	1590	1330	1060	790	750	750
	W	1050	890	750	610	480	380	300	230	220	220

TC:Total Capacity [kW]
SHC:Sensible Heat Capacity [kW]

Combination

Indoor unit : RAV-HM561SDT-E/TR x 2 (Twin system)

Outdoor unit : RAV-GM1101ATP-E/TR, RAV-GM1101ATJP-E

	Cooling		Heating	
	Capacity(W)	Power consumption (W)	Capacity(W)	Power consumption (W)
MINIMUM	3000	600	3000	600
RATING	9500	3030	11200	2990

Q: Capacity in W
W: Power Consumption in W

Cooling

Outdoor temperature(ºC)		Load(%)									
		100	**90**	**80**	**70**	**60**	**50**	**40**	**30**	**20**	**10**
40	Q	9000	8100	7200	6300	5400	4500	3600	2840	2840	2840
	W	3290	2630	2140	1730	1370	1060	840	650	650	650
35	Q	9500	8550	7600	6650	5700	4750	3800	3000	3000	3000
	W	3030	2420	1970	1590	1260	980	770	600	600	600
30	Q	9960	8960	7960	6970	5970	4980	3980	3140	3140	3140
	W	2750	2200	1790	1440	1140	890	700	540	540	540
25	Q	10340	9300	8270	7240	6200	5170	4130	3260	3260	3260
	W	2500	2000	1620	1310	1040	810	630	490	490	490
20	Q	10610	9550	8490	7430	6370	5310	4240	3350	3350	3350
	W	2260	1800	1470	1180	940	730	570	450	450	450

Heating

Outdoor temperature(ºC)		Load(%)									
		100	**90**	**80**	**70**	**60**	**50**	**40**	**30**	**20**	**10**
15	Q	13410	12060	10730	9390	8050	6700	5360	4020	3590	3590
	W	3280	2820	2370	1930	1540	1210	940	720	660	660
10	Q	12190	10950	9750	8530	7310	6090	4870	3660	3260	3260
	W	3120	2680	2250	1840	1470	1150	900	690	630	630
7	Q	11200	10080	8960	7840	6720	5600	4480	3360	3000	3000
	W	2990	2570	2160	1760	1410	1100	860	660	600	600
5	Q	8630	7760	6900	6040	5180	4310	3450	2590	2310	2310
	W	2570	2210	1850	1510	1210	950	740	570	520	520
2	Q	8440	7580	6750	5900	5060	4210	3370	2530	2260	2260
	W	2530	2180	1830	1490	1190	930	730	560	510	510
0	Q	8310	7480	6650	5820	4990	4150	3320	2490	2230	2230
	W	2510	2150	1810	1480	1180	920	720	550	500	500
-5	Q	8010	7200	6410	5610	4810	4000	3200	2400	2150	2150
	W	2450	2100	1770	1440	1150	900	700	540	490	490
-7	Q	7890	7090	6310	5520	4730	3940	3150	2370	2110	2110
	W	2420	2080	1750	1430	1140	890	700	540	490	490
-10	Q	7280	6550	5830	5100	4370	3640	2910	2180	1950	1950
	W	2330	2010	1680	1370	1100	860	670	520	470	470
-15	Q	5600	5040	4480	3920	3360	2800	2240	1680	1500	1500
	W	2080	1790	1510	1230	980	770	600	460	420	420

2-3-6. Fan Static Characteristic

RAV-HM301SDT-E/TR

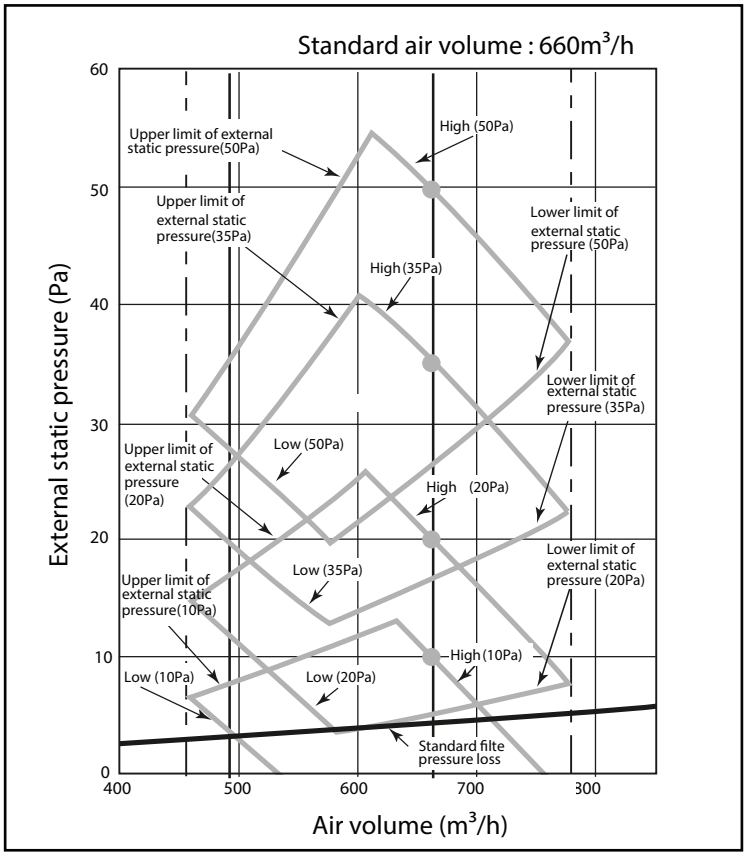

RAV-HM401SDT-E/TR

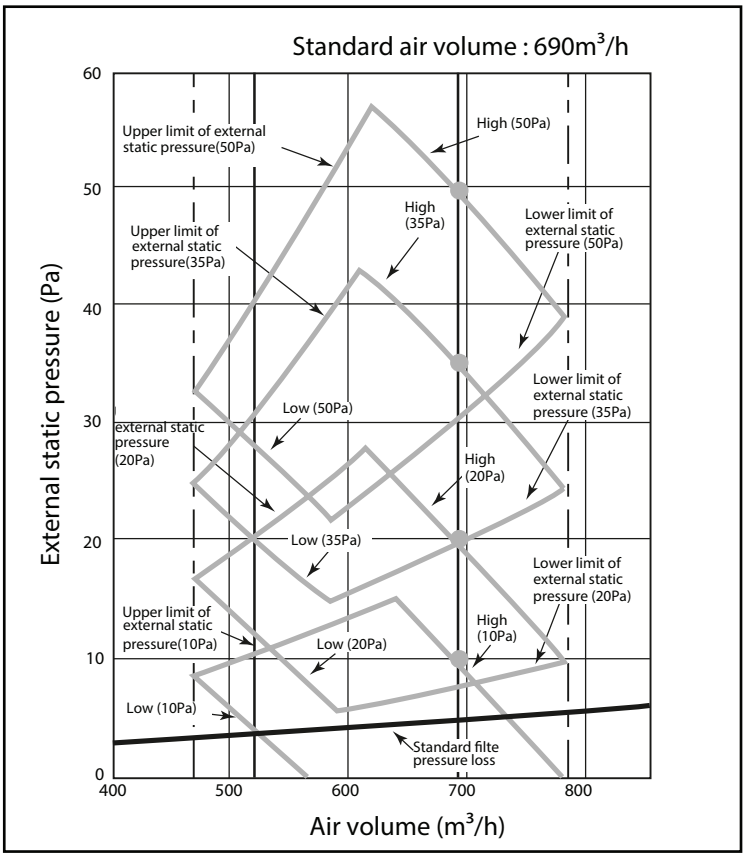

RAV-HM561SDT-E/TR

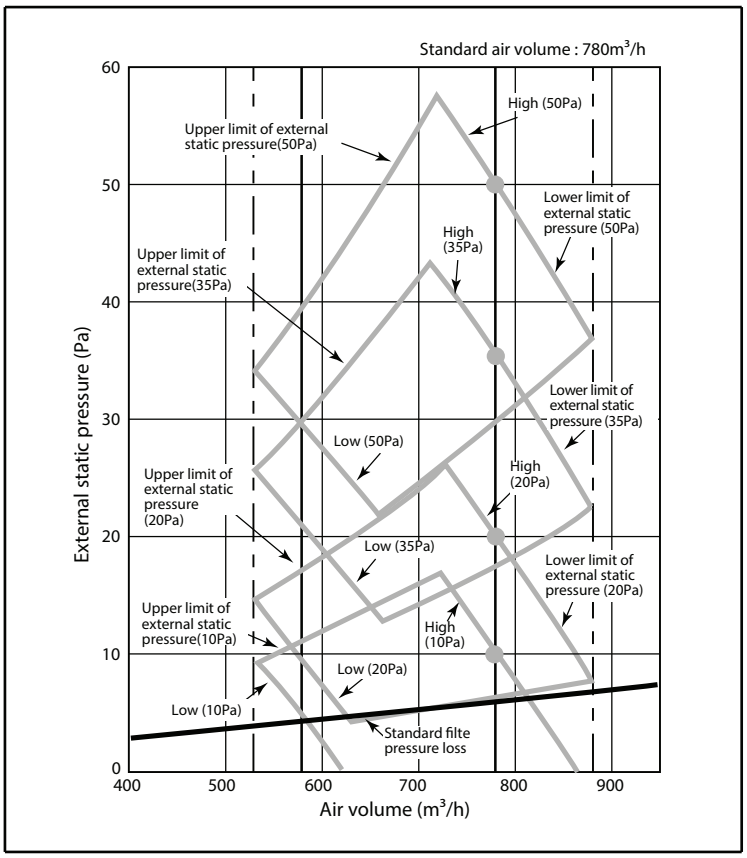

2-3-7. Sound Characteristics (NC curve)

RAV-HM301SDT-E/TR, RAV-HM401SDT-E/TR

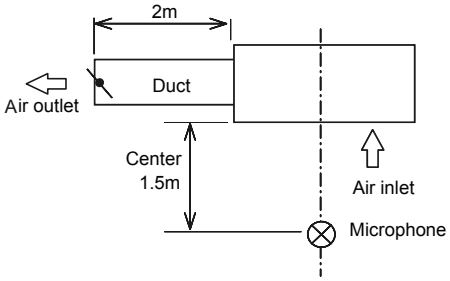

[External static pressure 10Pa]

Fan tap	H	M	L
Sound pressure level (dB(A))	39	36	33

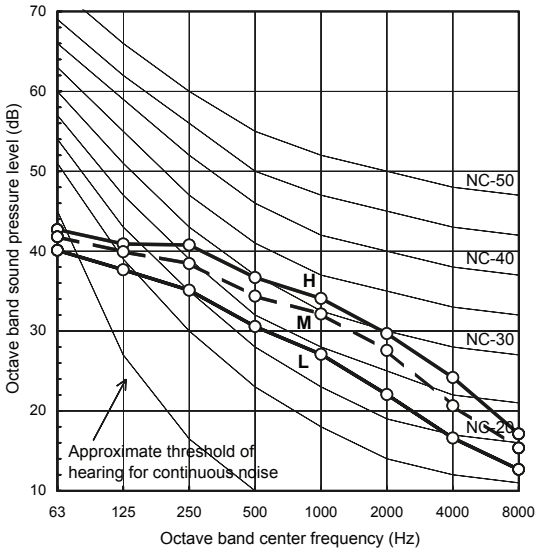

[External static pressure 20Pa]

Fan tap	H	M	L
Sound pressure level (dB(A))	40	37	34

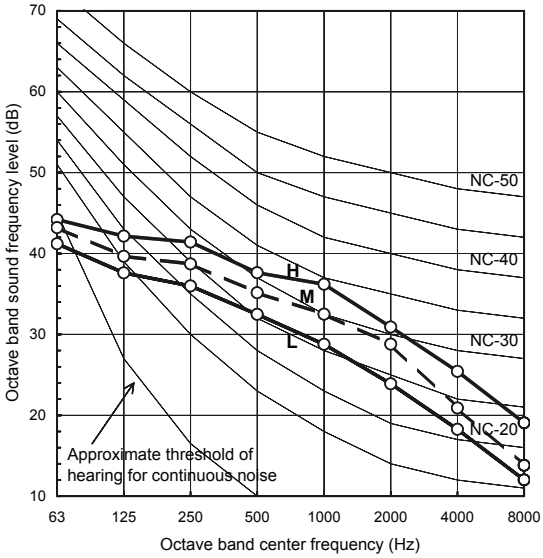

[External static pressure 35Pa]

Fan tap	H	M	L
Sound pressure level (dB(A))	41	38	35

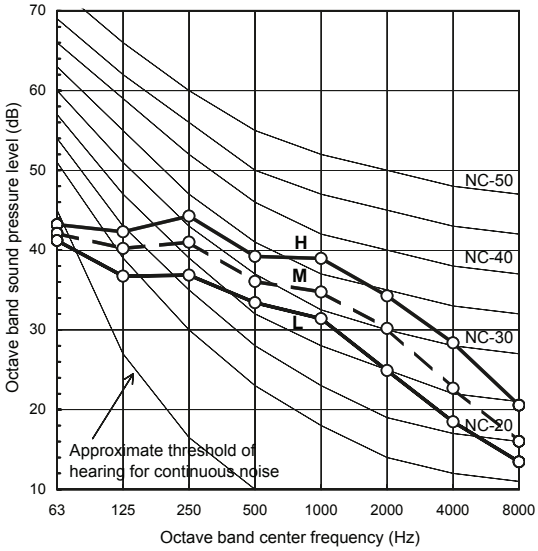

[External static pressure 50Pa]

Fan tap	H	M	L
Sound pressure level (dB(A))	43	40	37

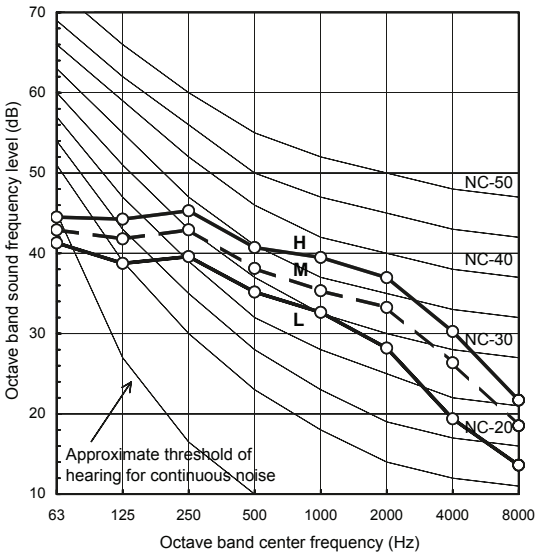

RAV-HM561SDT-E/TR

[Measuring location]

Under air intake

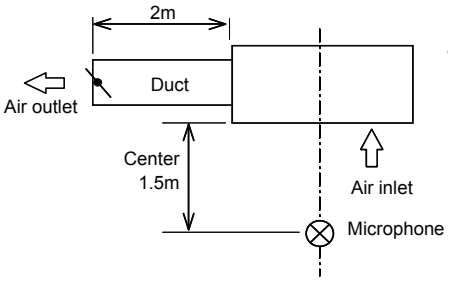

[External static pressure 10Pa]

Fan tap	H	M	L
Sound pressure level (dB(A))	45	40	36

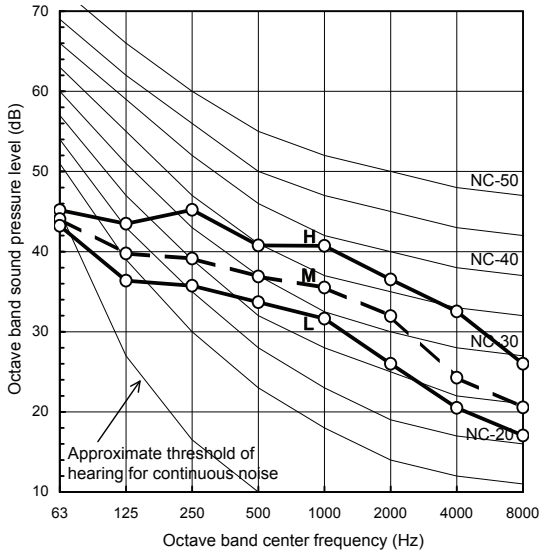

[External static pressure 20Pa]

Fan tap	H	M	L
Sound pressure level (dB(A))	46	41	37

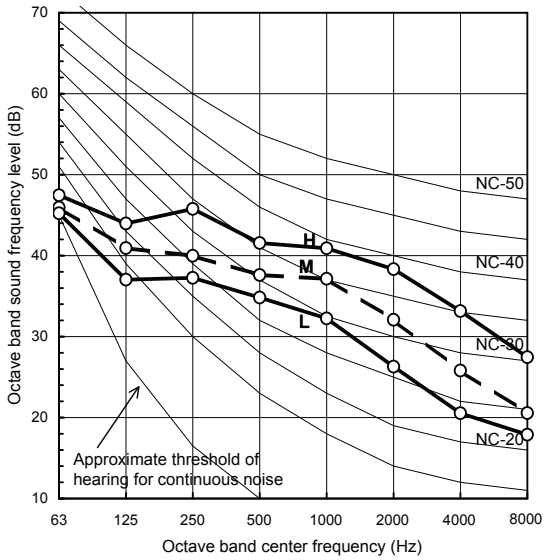

[External static pressure 35Pa]

Fan tap	H	M	L
Sound pressure level (dB(A))	47	43	39

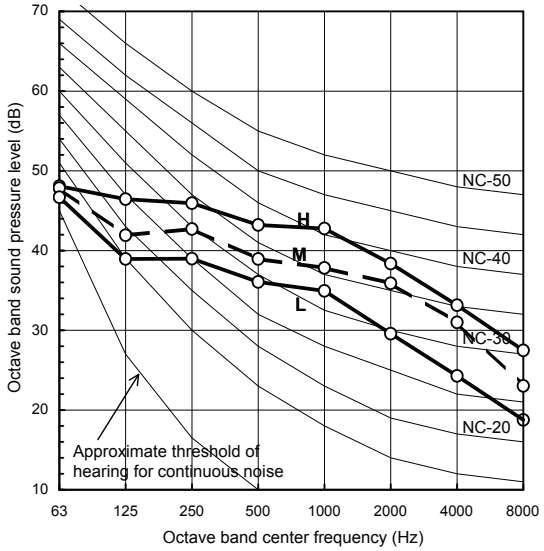

[External static pressure 50Pa]

Fan tap	H	M	L
Sound pressure level (dB(A))	48	44	41

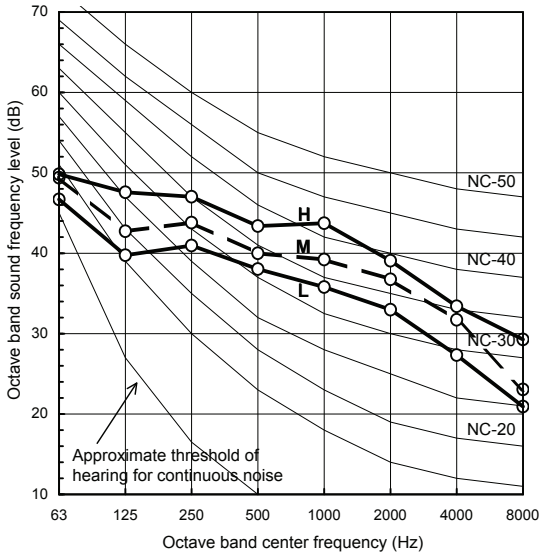

2-4. Standard Duct Type

2-4-1. Specifications

2-4-2. Dimension

2-4-3. Wiring Diagrams

2-4-4. Sensible Capacity Table

2-4-5. Part Load Performance

2-4-6. Fan Static Characteristic

2-4-7. Sound Characteristics (NC Curve)

2-4-8. Accessories

2-4-1. Specifications

Standard Duct Type <Single Type>

Model		Indoor unit		RAV-HM561BTP-E/TR	RAV-HM801BTP-E/TR	RAV-HM1101BTP-E/TR	RAV-HM1401BTP-E/TR
		Outdoor unit (RAV-GM***ATJP-E)		RAV-GM561ATP-E1/TR1	RAV-GM801ATP-E/TR	RAV-GM1101ATP-E/TR	RAV-GM1401ATP-E/TR
Cooling capacity			(kW)	5.0 < 1.5 - 5.6 >	6.7 < 1.5 - 7.4 >	9.5 < 3.0 - 11.2 >	12.1 < 3.0 - 13.2 >
Heating capacity			(kW)	5.3 < 1.5 - 6.3 >	7.7 < 1.5 - 9.0 >	11.2 < 3.0 - 13.0 >	13.0 < 3.0 - 16.0 >
Power supply				1 phase 220V-240V/50Hz, 1phase 220V/60Hz			
Electrical characteristics	Cooling	Running current	(A)	8.58 - 7.86	11.20 - 10.20	14.50-13.20	21.40-19.60
	Cooling	Power consumption	(kW)	1.83	2.38	2.99	4.42
		Power factor	(%)	97	97	94	94
		EER		2.73	2.82	3.18	2.74
		SEER		5.28	5.20	5.28	5.36
	Heating	Running current	(A)	7.59 - 6.96	10.90 - 9.97	14.50-13.30	17.40-15.90
	Heating	Power consumption	(kW)	1.62	2.32	2.99	3.60
		Power factor	(%)	97	97	94	94
		COP		3.27	3.32	3.75	3.61
		SCOP		4.08	4.13	4.19	4.19
	Maximum current			15.5	15.5	22.8	22.8
Indoor unit							
Appearance		Main unit		Zinc hot dipping hot steel			
Outer dimension		Main unit	Height (mm)	275			
			Width (mm)	700	1,000	1,400	
			Depth (mm)	750			
Total weight		Main unit	(kg)	23	30	40	
Fan unit		Fan		Centrifugal fan			
		Air Flow	H/M/L (m3/h)	800 / 630 / 480	1200 / 930 / 720	2100 / 1650 / 1260	2100 / 1650 / 1260
		Motor	(W)	150		250	
Extarnal static pressure		Standard (Upper - Lower)	(Pa)	30 (120 - 30)		50 (120 - 30)	
Air filter				Standard filter (Long life filter)			
Sound pressure level			H/M/L (dB)	33 / 29 / 25	34 / 30 / 26	40 / 36 / 33	40 / 36 / 33
Sound power level			H/M/L (dB)	48 / 44 / 40	49 / 45 / 41	55 / 51 / 48	55 / 51 / 48
Connecting pipe		Drain port		VP25			
Outdoor unit							
Air Flow			(m3/h)	2,400	2,700	4,080	4,200
Outer dimension		Height	(mm)	550		890	
		Width	(mm)	780		900	
		Depth	(mm)	290		320	
Total weight		Main unit	(kg)	40	44	68	
Pipe		Min. length	(m)	5.0			
		Max. total length	(m)	30.0		50.0	
Flare Connections		Gas side	(mm)	12.7	15.9		
		Liquid side	(mm)	6.4	9.5		
Sound pressure level		Cooling/Heating	(dB)	46 / 48	48 / 52	54 / 57	55 / 57
Sound power level		Cooling/Heating	(dB)	63 / 65	65 / 69	70 / 74	70 / 74
Operating Range		Cooling	(°C)	-15 / 46			
		Heating	(°C)	-15 / 15			

*1 : The cooling capacities and electrical characteristics are measured under the conditions specified by JIS B 8615 based on the reference piping. The reference piping consists of 5 m of main piping and 2.5 m of branch piping connected with 0 meter height.

*2 : The sound level are measured in an anechoic chamber in accordance with JIS B 8616. Normally, the values measured in the actual operating environment become larger than the indicated values due to the effects of external sound.

Note :

Rated conditions Cooling : Indoor air temperature 27°C DB/19°C WB, Outdoor air temperature 35°C DB
Heating : Indoor air temperature 20°C DB, Outdoor air temperature 7°C DB/6°C WB

Standard Duct (Twin System)

Model		Indoor unit 1		RAV-HM561BTP-E/TR	RAV-HM801BTP-E/TR
		Indoor unit 2		RAV-HM561BTP-E/TR	RAV-HM801BTP-E/TR
		Outdoor unit	(RAV-GM***ATJP-E)	RAV-GM1101ATP-E/TR	RAV-GM1401ATP-E/TR
Cooling capacity			(kW)	9.5 < 3.0 - 11.2 >	12.1 < 3.0 - 13.2 >
Heating capacity			(kW)	11.2 < 3.0 - 13.0 >	13.0 < 3.0 - 16.0 >
Power supply				1 phase 220V-240V/50Hz, 1phase 220V/60Hz	
Electrical characteristics	Cooling	Running current	(A)	14.5-13.2	21.37 - 19.59
		Power consumption	(kW)	2.99	4.42
		Power factor	(%)	94	94
		EER		3.18	2.74
		SEER		5.28	5.36
	Heating	Running current	(A)	14.5-13.3	17.40-15.90
		Power consumption	(kW)	2.99	3.60
		Power factor	(%)	94	94
		COP		3.75	3.61
		SCOP		4.22	4.21
	Maximum current			22.8	22.8
Indoor unit					
Appearance		Main unit		Zinc hot dipping steel plate	
Outer dimension		Main unit	Height (mm)	275	
			Width (mm)	700	1,000
			Depth (mm)	750	
Total weight		Main unit		23	30
Fan unit		Fan		Centrifugal fan	
		Standard air flow	H/M/L (m3/h)	800/630/480	1200/930/720
		Motor	(W)	150	
Extarnal static pressure		Standard (Upper - Lower)	(Pa)	30 (120 - 30)	
Air filter				Long life filter	
Sound pressure level			H/M/L (dB)	33 / 29 / 25	34 / 30 / 26
Sound power level			H/M/L (dB)	48 / 44 / 40	49 / 45 / 41
Connecting pipe		Drain port		VP25	
Outdoor unit					
Air Flow			(m3/h)	4,080	4,200
Outer dimension		Height	(mm)	890	
		Width	(mm)	900	
		Depth	(mm)	320	
Total weight		Main unit	(kg)	68	
Pipe		Min. length	(m)	5.0	
		Max. total length	(m)	50.0	
Flare Connections		Main	Gas (mm)	15.9	
			Liquid (mm)	9.5	
		Branch	Gas (mm)	12.7	
			Liquid (mm)	6.4	
Sound pressure level		Cooling/Heating	(dB)	54 / 57	55 / 57
Sound power level		Cooling/Heating	(dB)	70 / 74	70 / 74
Operating Range		Cooling	(°C)	-15 / 46	
		Heating	(°C)	-15 / 15	

*1 : The cooling capacities and electrical characteristics are measured under the conditions specified by JIS B 8615 based on the reference piping. The reference piping consists of 5 m of main piping and 2.5 m of branch piping connected with 0 meter height.

*2 : The sound level are measured in an anechoic chamber in accordance with JIS B 8616. Normally, the values measured in the actual operating environment become larger than the indicated values due to the effects of external sound.

Note :

Rated conditions Cooling : Indoor air temperature 27°C DB/19°C WB, Outdoor air temperature 35°C DB
Heating : Indoor air temperature 20°C DB, Outdoor air temperature 7°C DB/6°C WB

2-4-2. Dimension

RAV-HM561BTP-E/TR, RAV-HM801BTP-E/TR, RAV-HM1101BTP-E/TR and RAV-HM1401BTP-E/TR

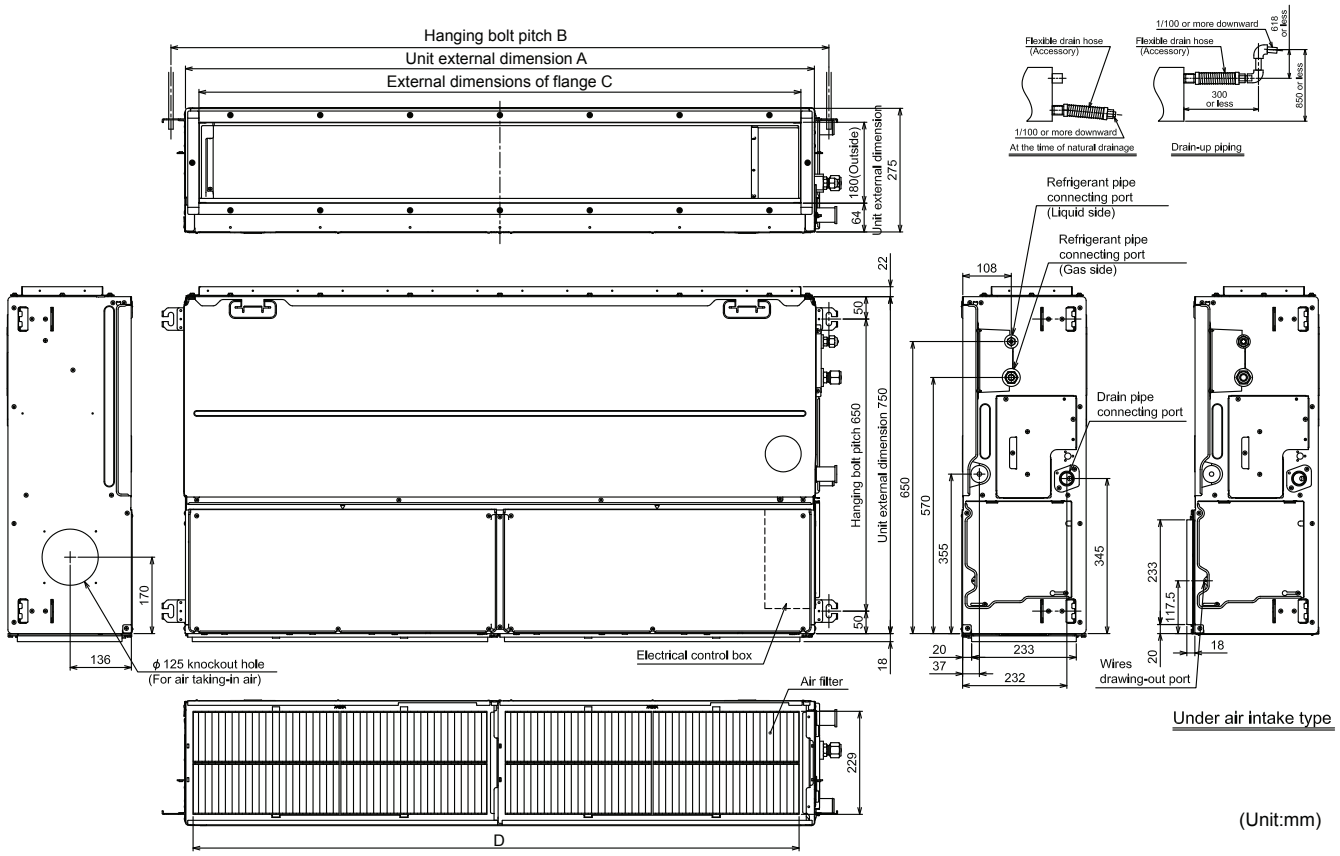

Dimension

	A	B	C	D
RAV-SM566BTP-E / E1	700	765	640	750
RAV-SM806BTP-E / E1	1000	1065	940	1050
RAV-SM1106BTP-E / E1 RAV-SM1406BTP-E	1400	1465	1340	1450

Space required for installation and servicing

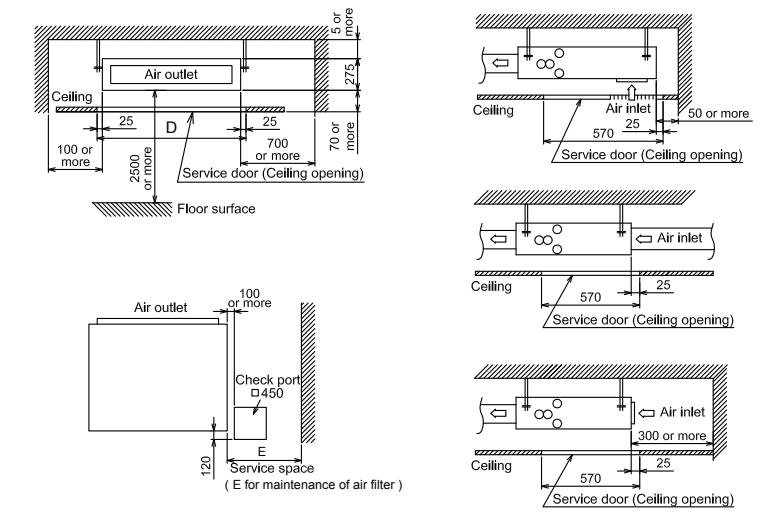

	E
RAV-SM566BTP-E / E1	700
RAV-SM806BTP-E / E1	500
RAV-SM1106BTP-E / E1 RAV-SM1406BTP-E	700

RAV- HM561BTP-E/TR

<Under air intake>

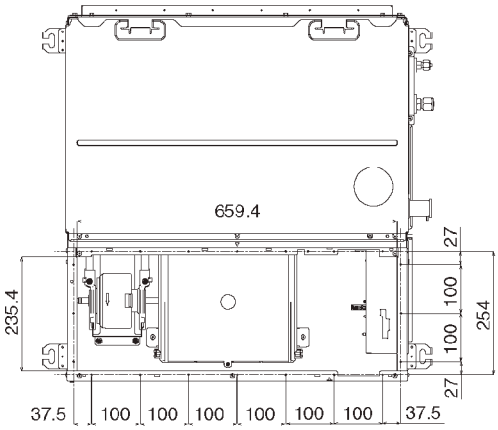

<Back air intake>

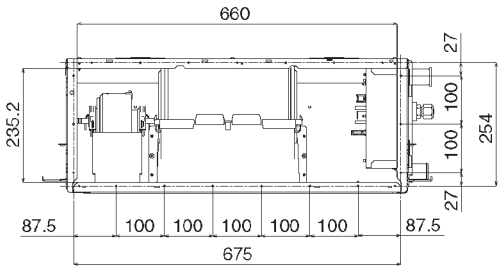

RAV-HM801BTP-E/TR

<Under air intake>

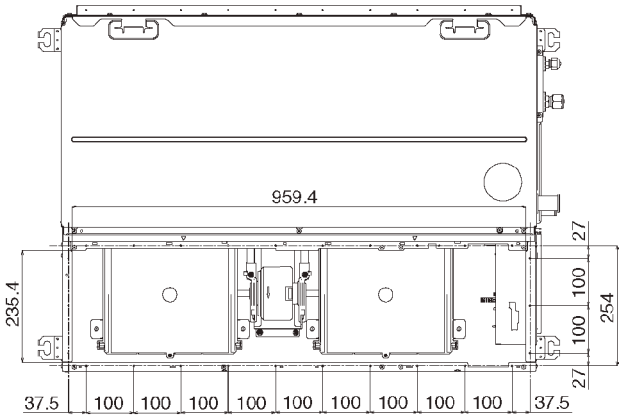

<Back air intake>

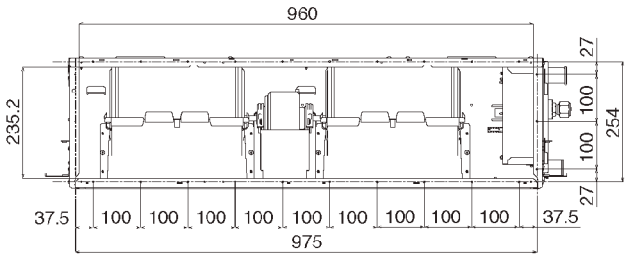

RAV-HM1101BTP-E/TR and RAV-HM1401BTP-E/TR

<Under air intake>

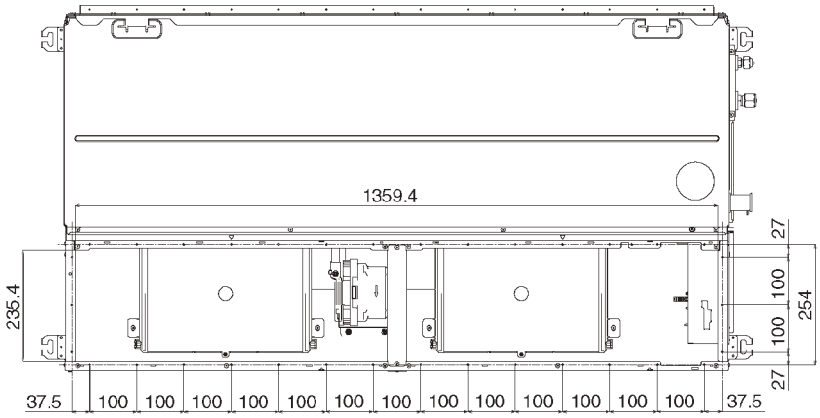

<Back air intake>

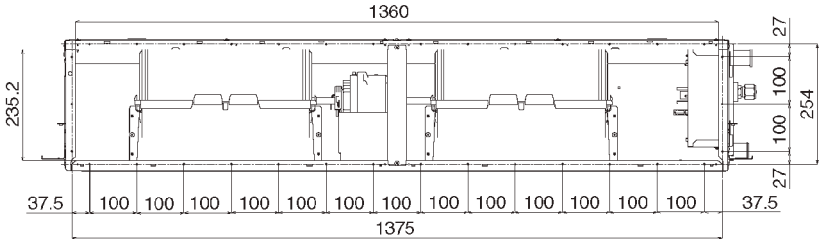

2-4-3. Wiring Diagrams

RAV-HM561BTP-E/TR, RAV-HM801BTP-E/TR, RAV-HM1101BTP-E/TR and RAV-HM1401BTP-E/TR

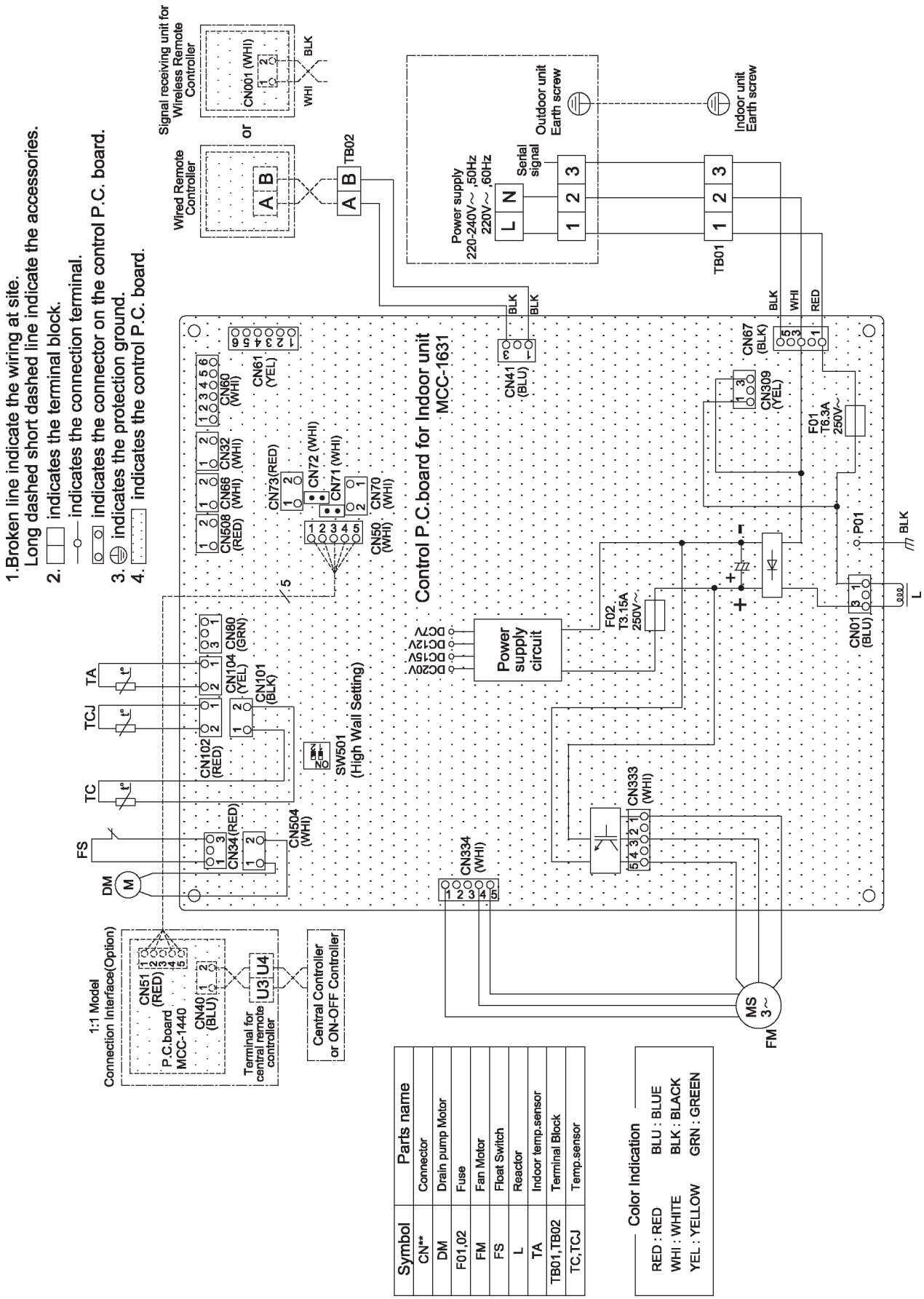

2-4-4. Sensible Capacity Table

Product models : RAV-HM561BTP-E/TR ; RAV-GM561ATP-E1/TR1, RAV-GM561AT(J)P-E1

Specification of product at standard condition

Standard Condition		
	Indoor	27°C (DB) / 19°C (WB)
	Outdoor	35°C (DB) / 24°C (WB)

Total Cooling Capacity (TC)	5.00	kW
Sensible Heat Capacity (SHC)	3.66	kW

Outdoor air temperature	Indoor air temperature													
	20.0°C (DB) 14.0°C (WB)		23.0°C (DB) 16.0°C (WB)		26.0°C (DB) 18.0°C (WB)		27.0°C (DB) 19.0°C (WB)		28.0°C (DB) 20.0°C (WB)		30.0°C (DB) 22.0°C (WB)		32.0°C (DB) 24.0°C (WB)	
DB (°C)	TC	SHC	TC	SHC	TC	SHC	TC	SHC	TC	SHC	TC	SHC	TC	SHC
10	5.42	4.30	5.99	4.57	6.42	4.86	6.60	4.83	6.79	4.82	7.19	4.74	7.52	4.62
11	5.37	4.26	5.93	4.53	6.35	4.81	6.54	4.79	6.73	4.77	7.12	4.70	7.45	4.57
12	5.32	4.22	5.87	4.48	6.29	4.76	6.48	4.74	6.66	4.72	7.05	4.65	7.38	4.53
13	5.27	4.18	5.82	4.44	6.23	4.71	6.41	4.69	6.60	4.68	6.98	4.60	7.30	4.48
14	5.21	4.13	5.76	4.39	6.17	4.67	6.35	4.65	6.53	4.63	6.91	4.56	7.23	4.44
15	5.16	4.09	5.70	4.35	6.10	4.62	6.28	4.60	6.46	4.58	6.84	4.51	7.16	4.39
16	5.11	4.05	5.64	4.30	6.04	4.57	6.22	4.55	6.40	4.54	6.77	4.47	7.09	4.35
17	5.06	4.01	5.58	4.26	5.98	4.53	6.16	4.51	6.33	4.49	6.70	4.42	7.01	4.30
18	5.00	3.97	5.52	4.22	5.92	4.48	6.09	4.46	6.27	4.44	6.63	4.37	6.94	4.26
19	4.95	3.92	5.47	4.17	5.85	4.43	6.03	4.41	6.20	4.40	6.56	4.33	6.87	4.22
20	4.90	3.88	5.41	4.13	5.79	4.38	5.96	4.36	6.13	4.35	6.49	4.28	6.79	4.17
21	4.84	3.84	5.35	4.08	5.73	4.34	5.90	4.32	6.07	4.30	6.43	4.24	6.72	4.13
22	4.79	3.80	5.29	4.04	5.67	4.29	5.83	4.27	6.00	4.26	6.36	4.19	6.65	4.08
23	4.74	3.76	5.23	3.99	5.60	4.24	5.77	4.22	5.94	4.21	6.29	4.14	6.57	4.04
24	4.69	3.72	5.18	3.95	5.54	4.20	5.71	4.18	5.87	4.16	6.22	4.10	6.50	3.99
25	4.63	3.67	5.12	3.90	5.48	4.15	5.64	4.13	5.80	4.12	6.15	4.05	6.43	3.95
26	4.58	3.63	5.06	3.86	5.42	4.10	5.58	4.08	5.74	4.07	6.08	4.01	6.35	3.90
27	4.53	3.59	5.00	3.82	5.36	4.05	5.51	4.04	5.67	4.02	6.01	3.96	6.28	3.86
28	4.48	3.55	4.94	3.77	5.29	4.01	5.45	3.99	5.61	3.98	5.94	3.91	6.21	3.81
29	4.42	3.51	4.88	3.73	5.23	3.96	5.39	3.94	5.54	3.93	5.87	3.87	6.14	3.77
30	4.37	3.46	4.83	3.68	5.17	3.91	5.32	3.89	5.47	3.88	5.80	3.82	6.06	3.72
31	4.32	3.42	4.77	3.64	5.11	3.87	5.26	3.85	5.41	3.84	5.73	3.77	5.99	3.68
32	4.27	3.38	4.71	3.59	5.04	3.82	5.19	3.80	5.34	3.79	5.66	3.73	5.92	3.63
33	4.21	3.34	4.65	3.55	4.98	3.77	5.13	3.75	5.28	3.74	5.59	3.68	5.84	3.59
34	4.16	3.30	4.59	3.50	4.92	3.72	5.06	3.71	5.21	3.69	5.52	3.64	5.77	3.54
35	**4.11**	**3.26**	**4.54**	**3.46**	**4.86**	**3.68**	**5.00**	**3.66**	**5.14**	**3.65**	**5.45**	**3.59**	**5.70**	**3.50**
36	4.05	3.21	4.48	3.42	4.79	3.63	4.94	3.61	5.08	3.60	5.38	3.54	5.62	3.45
37	4.00	3.17	4.42	3.37	4.73	3.58	4.87	3.57	5.01	3.55	5.31	3.50	5.55	3.41
38	3.95	3.13	4.36	3.33	4.67	3.54	4.81	3.52	4.94	3.51	5.24	3.45	5.48	3.36
39	3.90	3.09	4.30	3.28	4.61	3.49	4.74	3.47	4.88	3.46	5.17	3.41	5.40	3.32
40	2.80	2.22	3.09	2.36	3.31	2.51	3.41	2.49	3.50	2.49	3.71	2.45	3.88	2.38
41	2.69	2.13	2.97	2.26	3.18	2.41	3.27	2.39	3.37	2.39	3.56	2.35	3.73	2.29
42	2.58	2.04	2.84	2.17	3.05	2.31	3.14	2.30	3.23	2.29	3.42	2.25	3.57	2.19
43	2.46	1.95	2.72	2.08	2.91	2.21	3.00	2.20	3.09	2.19	3.27	2.15	3.42	2.10
44	2.35	1.87	2.60	1.98	2.78	2.11	2.86	2.10	2.95	2.09	3.12	2.06	3.26	2.00
45	1.49	1.18	1.65	1.26	1.76	1.34	1.82	1.33	1.87	1.32	1.98	1.30	2.07	1.27
46	1.38	1.09	1.52	1.16	1.63	1.24	1.68	1.23	1.73	1.23	1.83	1.21	1.91	1.18

RAV-HM*__1BTP-E (80 , 110, 140)

	door air temp.																		
unit size	outdoor air temp.	14.0CWB		15.0CWB		16.0CWB		17.0CWB		18.0CWB		19.0CWB		20.0CWB		22.0CWB		24.0CWB	
		20.0CDB		21.5CDB		23.0CDB		24.5CDB		26.0CDB		27.0CDB		28.0CDB		30.0CDB		32.0CDB	
	CDB	TC	SHC	TC	SHC	TC	SHC	TC	SHC	TC	SHC	TC	SHC	TC	SHC	TC	SHC	TC	SHC
801	10.0	6.3	4.9	6.8	5.3	7.0	5.4	7.2	5.6	7.5	5.8	7.6	6.0	7.8	6.1	8.3	6.4	8.7	6.7
	12.0	6.2	4.8	6.8	5.3	6.9	5.4	7.2	5.6	7.4	5.7	7.6	5.9	7.8	6.1	8.3	6.4	8.7	6.7
	14.0	6.2	4.8	6.7	5.2	6.9	5.3	7.1	5.5	7.4	5.7	7.5	5.9	7.7	6.1	8.2	6.3	8.6	6.6
	16.0	6.1	4.8	6.7	5.2	6.8	5.3	7.1	5.5	7.3	5.7	7.5	5.8	7.7	6.0	8.2	6.3	8.6	6.5
	18.0	6.1	4.7	6.6	5.1	6.8	5.2	7.0	5.4	7.3	5.6	7.5	5.8	7.6	6.0	8.1	6.2	8.5	6.5
	20.0	6.0	4.7	6.6	5.1	6.7	5.2	7.0	5.4	7.2	5.6	7.4	5.7	7.6	5.9	8.0	6.2	8.4	6.4
	21.0	6.0	4.7	6.5	5.1	6.7	5.2	6.9	5.4	7.2	5.6	7.4	5.7	7.5	5.9	8.0	6.2	8.4	6.4
	23.0	5.9	4.6	6.5	5.0	6.6	5.1	6.8	5.3	7.1	5.5	7.3	5.7	7.5	5.8	7.9	6.2	8.3	6.3
	25.0	5.9	4.6	6.4	5.0	6.5	5.1	6.8	5.3	7.0	5.4	7.2	5.6	7.5	5.8	7.8	6.1	8.2	6.2
	27.0	5.9	4.5	6.3	4.9	6.4	5.0	6.7	5.2	6.9	5.4	7.1	5.5	7.4	5.7	7.7	6.0	8.1	6.2
	29.0	5.8	4.5	6.2	4.8	6.3	4.9	6.6	5.1	6.8	5.3	7.0	5.5	7.3	5.6	7.6	6.0	8.0	6.1
	31.0	5.7	4.4	6.1	4.8	6.3	4.9	6.5	5.0	6.7	5.2	6.9	5.4	7.1	5.5	7.5	5.9	7.9	6.0
	33.0	5.6	4.3	6.0	4.7	6.1	4.8	6.4	5.0	6.6	5.1	6.8	5.3	7.0	5.4	7.5	5.8	7.7	6.2
	35.0	5.5	4.3	5.9	4.6	6.0	4.7	6.3	4.9	6.5	5.0	6.7	5.2	6.9	5.4	7.3	5.7	7.6	5.9
	37.0	5.4	4.2	5.9	4.5	5.9	4.6	6.1	4.8	6.4	5.0	6.6	5.1	6.8	5.2	7.2	5.6	7.5	5.8
	39.0	5.3	4.1	5.8	4.4	5.9	4.5	6.0	4.7	6.2	4.8	6.4	5.0	6.6	5.1	7.0	5.4	7.4	5.7

	Indoor air temp.																		
	Outdoor air temp.	14.0 CWB		15.0 CWB		16.0 CWB		17.0 CWB		18.0 CWB		19.0 CWB		20.0 CWB		22.0 CWB		24.0 CWB	
		20.0 CDB		21.0 CDB		23.0 CDB		24.0 CDB		26.0 CDB		27.0 CDB		28.0 CDB		30.0 CDB		32.0 CDB	
	°C DB	TC	SHC	TC	SHC	TC	SHC	TC	SHC	TC	SHC	TC	SHC	TC	SHC	TC	SHC	TC	SHC
1101	10.0	9.09	7.63	9.41	7.81	10.04	8.13	10.28	8.30	10.75	8.64	11.07	8.62	11.39	8.61	12.06	8.51	12.61	8.33
	12.0	9.03	7.59	9.35	7.76	9.98	8.08	10.21	8.25	10.68	8.59	11.00	8.57	11.31	8.55	11.98	8.46	12.53	8.28
	14.0	8.97	7.53	9.28	7.70	9.90	8.02	10.14	8.19	10.61	8.53	10.92	8.50	11.23	8.49	11.89	8.40	12.44	8.22
	16.0	8.90	7.47	9.21	7.64	9.82	7.96	10.06	8.13	10.52	8.46	10.83	8.44	11.14	8.42	11.80	8.33	12.34	8.15
	18.0	8.82	7.40	9.12	7.57	9.74	7.89	9.97	8.05	10.43	8.38	10.73	8.36	11.04	8.35	11.69	8.26	12.23	8.08
	20.0	8.71	7.32	9.02	7.48	9.62	7.79	9.85	7.96	10.31	8.29	10.61	8.26	10.91	8.25	11.56	8.16	12.09	7.99
	21.0	8.68	7.29	8.99	7.46	9.59	7.77	9.82	7.93	10.27	8.26	10.57	8.24	10.87	8.22	11.52	8.13	12.05	7.96
	23.0	8.59	7.21	8.88	7.37	9.48	7.68	9.71	7.84	10.15	8.16	10.45	8.14	10.75	8.13	11.39	8.04	11.91	7.87
	25.0	8.49	7.13	8.79	7.29	9.38	7.59	9.60	7.75	10.04	8.07	10.34	8.05	10.63	8.04	11.26	7.95	11.78	7.78
	27.0	8.36	7.02	8.66	7.18	9.24	7.48	9.46	7.64	9.89	7.95	10.18	7.93	10.47	7.92	11.09	7.83	11.60	7.67
	29.0	8.24	6.92	8.53	7.08	9.10	7.37	9.32	7.53	9.75	7.84	10.03	7.81	10.32	7.80	10.93	7.72	11.43	7.55
	31.0	8.11	6.81	8.39	6.96	8.95	7.25	9.17	7.41	9.59	7.71	9.87	7.69	10.15	7.68	10.75	7.59	11.25	7.43
	33.0	7.97	6.69	8.24	6.84	8.80	7.12	9.00	7.28	9.42	7.57	9.70	7.55	9.97	7.54	10.56	7.46	11.05	7.30
	35.0	7.80	6.55	8.07	6.70	8.62	6.98	8.82	7.13	9.23	7.42	9.50	7.40	9.77	7.39	10.35	7.31	10.82	7.15
	37.0	7.65	6.42	7.92	6.57	8.45	6.84	8.65	6.99	9.05	7.27	9.31	7.25	9.58	7.24	10.14	7.16	10.61	7.01
	39.0	7.48	6.28	7.74	6.42	8.26	6.69	8.45	6.83	8.84	7.11	9.10	7.09	9.36	7.08	9.91	7.00	10.37	6.85

	indoor air temp.																		
unit size	outdoor air temp.	14.0CWB		15.0CWB		16.0CWB		17.0CWB		18.0CWB		19.0CWB		20.0CWB		22.0CWB		24.0CWB	
		20.0CDB		21.5CDB		23.0CDB		24.5CDB		26.0CDB		27.0CDB		28.0CDB		30.0CDB		32.0CDB	
	CDB	TC	SHC	TC	SHC	TC	SHC	TC	SHC	TC	SHC	TC	SHC	TC	SHC	TC	SHC	TC	SHC
1401	10.0	11.3	9.1	12.3	9.6	12.6	9.7	13.0	10.1	13.5	10.3	13.8	10.2	14.2	10.2	15.1	10.1	15.8	10.0
	12.0	11.3	9.1	12.2	9.5	12.5	9.7	12.9	10.0	13.4	10.2	13.7	10.2	14.1	10.2	15.0	10.1	15.7	9.9
	14.0	11.2	9.0	12.1	9.5	12.4	9.6	12.9	10.0	13.3	10.1	13.6	10.1	14.0	10.1	14.9	10.1	15.6	9.9
	16.0	11.1	8.9	12.1	9.4	12.3	9.5	12.8	9.9	13.2	10.1	13.6	10.1	13.9	10.1	14.8	10.0	15.5	9.8
	18.0	11.0	8.9	12.0	9.3	12.2	9.5	12.7	9.8	13.1	10.1	13.5	10.1	13.8	10.0	14.6	9.9	15.3	9.7
	20.0	10.9	8.8	11.9	9.2	12.1	9.4	12.5	9.7	13.0	10.0	13.4	10.0	13.7	10.0	14.5	9.8	15.2	9.6
	21.0	10.9	8.7	11.8	9.2	12.0	9.3	12.5	9.7	12.9	9.9	13.3	9.9	13.6	9.9	14.5	9.8	15.1	9.6
	23.0	10.8	8.6	11.7	9.1	11.9	9.2	12.4	9.6	12.8	9.8	13.2	9.8	13.6	9.8	14.4	9.7	15.0	9.5
	25.0	10.6	8.5	11.5	9.0	11.8	9.1	12.2	9.5	12.7	9.7	13.0	9.7	13.4	9.7	14.1	9.6	14.8	9.4
	27.0	10.6	8.4	11.4	8.9	11.6	9.0	12.1	9.3	12.5	9.6	12.9	9.6	13.3	9.6	14.0	9.5	14.6	9.3
	29.0	10.5	8.3	1.5	8.8	11.5	8.9	11.9	9.2	12.3	9.5	12.7	9.5	13.1	9.4	13.8	9.3	14.4	9.1
	31.0	10.3	8.2	11.1	8.6	11.3	8.8	11.7	9.1	12.1	9.3	12.5	9.3	12.9	9.3	13.6	9.2	14.2	8.6
	33.0	10.1	8.1	10.9	8.5	11.1	8.6	11.5	8.9	11.9	9.2	12.3	9.2	12.7	9.1	13.4	9.0	14.0	8.8
	35.0	10.0	7.9	10.7	8.3	10.9	8.5	11.3	8.8	11.7	9.0	12.1	9.0	12.5	9.0	13.2	8.9	13.7	8.7
	37.0	9.8	7.9	10.6	8.2	10.7	8.3	11.1	8.6	11.5	8.8	11.9	8.8	12.2	8.8	13.0	8.7	13.6	8.5
	39.0	9.6	7.7	10.4	8.0	10.6	8.1	10.9	8.4	11.3	8.7	11.6	8.6	12.0	8.6	12.7	8.5	13.3	8.3

TC:Total Capacity [kW]

SHC:Sensible Heat Capacity [kW]

2-4-5. Part load performance

Combination

Indoor unit : RAV-HM561BTP-E/TR

Outdoor unit : RAV-GM561ATP-E1/TR1, RAV-GM561ATJP-E1

Operation range		Cooling		Heating	
		Q	P	Q	P
MINIMUM	W	1200	310	1500	310
RATING	W	5000	1830	5300	1620
MAXIMUM	W	5600	2050	6300	2470

Cooling

Outdoor Temperature DB (°C)	Parts Load (%)																			
	100		90		80		70		60		50		40		30		20		10	
	Q	P	Q	P	Q	P	Q	P	Q	P	Q	P	Q	P	Q	P	Q	P	Q	P
11	6604	1174	5944	1046	5283	918	4623	789	3963	661	3302	533	2642	404	1981	276	1585	199	1585	199
12	6540	1200	5886	1069	5232	938	4578	807	3924	676	3270	544	2616	413	1962	282	1570	203	1570	203
13	6476	1227	5828	1093	5181	959	4533	825	3886	690	3238	556	2590	422	1943	288	1554	208	1554	208
14	6412	1253	5771	1116	5129	979	4488	842	3847	705	3206	568	2565	431	1924	294	1539	212	1539	212
15	6348	1279	5713	1139	5078	1000	4443	860	3809	720	3174	580	2539	440	1904	301	1523	217	1523	217
16	6283	1305	5655	1163	5027	1020	4398	877	3770	735	3142	592	2513	449	1885	307	1508	221	1508	221
17	6219	1332	5597	1186	4975	1041	4353	895	3732	749	3110	604	2488	458	1866	313	1493	226	1493	226
18	6155	1358	5540	1209	4924	1061	4309	913	3693	764	3078	616	2462	467	1847	319	1477	230	1477	230
19	6091	1384	5482	1233	4873	1082	4264	930	3655	779	3045	628	2436	476	1827	325	1462	234	1462	234
20	6027	1410	5424	1256	4821	1102	4219	948	3616	794	3013	640	2411	486	1808	331	1446	239	1446	239
20	5963	1437	5366	1280	4770	1123	4174	966	3578	809	2981	652	2385	495	1789	338	1431	243	1431	243
21	5898	1463	5309	1303	4719	1143	4129	983	3539	823	2949	663	2359	504	1770	344	1416	248	1416	248
22	5834	1489	5251	1326	4667	1164	4084	1001	3501	838	2917	675	2334	513	1750	350	1400	252	1400	252
23	5770	1515	5193	1350	4616	1184	4039	1018	3462	853	2885	687	2308	522	1731	356	1385	257	1385	257
24	5706	1541	5135	1373	4565	1205	3994	1036	3424	868	2853	699	2282	531	1712	362	1369	261	1369	261
25	5642	1568	5078	1396	4513	1225	3949	1054	3385	882	2821	711	2257	540	1693	368	1354	266	1354	266
26	5578	1594	5020	1420	4462	1246	3904	1071	3347	897	2789	723	2231	549	1673	375	1339	270	1339	270
27	5513	1620	4962	1443	4411	1266	3859	1089	3308	912	2757	735	2205	558	1654	381	1323	274	1323	274
28	5449	1646	4904	1466	4359	1287	3814	1107	3270	927	2725	747	2180	567	1635	387	1308	279	1308	279
29	5385	1673	4847	1490	4308	1307	3770	1124	3231	941	2693	759	2154	576	1616	393	1292	283	1292	283
30	5321	1699	4789	1513	4257	1328	3725	1142	3193	956	2660	771	2128	585	1596	399	1277	288	1277	288
31	5257	1725	4731	1537	4205	1348	3680	1159	3154	971	2628	782	2103	594	1577	405	1262	292	1262	292
32	5193	1751	4673	1560	4154	1369	3635	1177	3116	986	2596	794	2077	603	1558	412	1246	297	1246	297
33	5128	1778	4616	1583	4103	1389	3590	1195	3077	1000	2564	806	2051	612	1539	418	1231	301	1231	301
34	5064	1804	4558	1607	4051	1410	3545	1212	3039	1015	2532	818	2026	621	1519	424	1215	306	1215	306
35	**5000**	**1830**	**4500**	**1630**	**4000**	**1430**	**3500**	**1230**	**3000**	**1030**	**2500**	**830**	**2000**	**630**	**1500**	**430**	**1200**	**310**	**1200**	**310**
36	4936	1856	4442	1653	3949	1450	3455	1248	2962	1045	2468	842	1974	639	1481	436	1185	314	1185	314
37	4872	1882	4385	1677	3897	1471	3410	1265	2923	1060	2436	854	1949	648	1462	442	1169	319	1169	319
38	4808	1909	4327	1700	3846	1491	3365	1283	2885	1074	2404	866	1923	657	1442	448	1154	323	1154	323
39	4743	1935	4269	1723	3795	1512	3320	1301	2846	1089	2372	878	1897	666	1423	455	1138	328	1138	328
40	3407	1495	3066	1331	2726	1168	2385	1005	2044	841	1704	678	1363	515	1022	351	818	253	818	253
41	3272	1495	2944	1331	2617	1168	2290	1005	1963	841	1636	678	1309	515	981	351	785	253	785	253
42	3136	1495	2822	1331	2509	1168	2195	1005	1881	841	1568	678	1254	515	941	351	753	253	753	253
43	3000	1495	2700	1331	2400	1168	2100	1005	1800	841	1500	678	1200	515	900	351	720	253	720	253
44	2864	1495	2578	1331	2292	1168	2005	1005	1719	841	1432	678	1146	515	859	351	687	253	687	253
45	1816	1160	1634	1033	1453	907	1271	780	1090	653	908	526	726	399	545	273	436	197	436	197
46	1680	1160	1512	1033	1344	907	1176	780	1008	653	840	526	672	399	504	273	403	197	403	197

Heating

Outdoor Temperature DB (°C)	Parts Load (%)																			
	100		90		80		70		60		50		40		30		20		10	
	Q	P	Q	P	Q	P	Q	P	Q	P	Q	P	Q	P	Q	P	Q	P	Q	P
-15	2400	973	2160	863	1920	753	1680	644	1440	534	1200	424	960	314	720	205	679	186	679	186
-14	2550	1007	2295	893	2040	780	1785	666	1530	553	1275	439	1020	325	765	212	722	193	722	193
-13	2700	1041	2430	923	2160	806	1890	688	1620	571	1350	454	1080	336	810	219	764	199	764	199
-12	2850	1074	2565	953	2280	832	1995	711	1710	590	1425	469	1140	347	855	226	807	206	807	206
-11	3000	1108	2700	983	2400	858	2100	733	1800	608	1500	483	1200	358	900	233	849	212	849	212
-10	3150	1142	2835	1013	2520	885	2205	756	1890	627	1575	498	1260	369	945	240	892	219	892	219
-9	3300	1176	2970	1044	2640	911	2310	778	1980	646	1650	513	1320	380	990	248	934	225	934	225
-8	3451	1210	3105	1074	2760	937	2415	801	2070	664	1725	528	1380	391	1035	255	977	232	977	232
-7	3601	1244	3240	1104	2880	963	2520	823	2160	683	1800	543	1440	402	1080	262	1019	238	1019	238
-6	3627	1265	3264	1122	2902	980	2539	837	2176	694	1814	552	1451	409	1088	266	1027	242	1027	242
-5	3654	1286	3288	1141	2923	996	2558	851	2192	706	1827	561	1462	416	1096	271	1034	246	1034	246
-4	3681	1307	3313	1160	2944	1012	2576	865	2208	717	1840	570	1472	423	1104	275	1042	250	1042	250
-3	3707	1328	3337	1178	2966	1029	2595	879	2224	729	1854	579	1483	429	1112	280	1049	254	1049	254
-2	3734	1349	3361	1197	2987	1045	2614	893	2240	741	1867	588	1494	436	1120	284	1057	258	1057	258
-1	3761	1370	3385	1216	3008	1061	2632	907	2256	752	1880	598	1504	443	1128	288	1064	262	1064	262
0	3787	1392	3409	1235	3030	1078	2651	921	2272	764	1894	607	1515	450	1136	293	1072	266	1072	266
1	3814	1413	3433	1253	3051	1094	2670	935	2288	775	1907	616	1526	457	1144	297	1079	270	1079	270
2	3841	1434	3457	1272	3072	1110	2688	949	2304	787	1920	625	1536	463	1152	302	1087	274	1087	274
3	3903	1453	3513	1289	3123	1125	2732	961	2342	797	1952	634	1561	470	1171	306	1105	278	1105	278
4	3966	1472	3570	1306	3173	1140	2776	974	2380	808	1983	642	1587	476	1190	310	1123	282	1123	282
5	4029	1491	3626	1323	3223	1155	2821	987	2418	819	2015	650	1612	482	1209	314	1140	285	1140	285
6	5163	1595	4647	1415	4131	1235	3614	1055	3098	875	2582	696	2065	516	1549	336	1461	305	1461	305
7	**5300**	**1620**	**4770**	**1437**	**4240**	**1255**	**3710**	**1072**	**3180**	**889**	**2650**	**706**	**2120**	**524**	**1590**	**341**	**1500**	**310**	**1500**	**310**
8	5437	1645	4893	1460	4349	1274	3806	1088	3262	903	2718	717	2175	532	1631	346	1539	315	1539	315
9	5574	1670	5016	1482	4459	1293	3901	1105	3344	917	2787	728	2229	540	1672	352	1577	320	1577	320
10	5710	1695	5139	1504	4568	1313	3997	1122	3426	930	2855	739	2284	548	1713	357	1616	324	1616	324
11	5847	1720	5262	1526	4678	1332	4093	1138	3508	944	2924	750	2339	556	1754	362	1655	329	1655	329
12	5984	1745	5385	1549	4787	1352	4189	1155	3590	958	2992	761	2394	564	1795	367	1694	334	1694	334
13	6121	1771	5509	1571	4897	1371	4284	1171	3672	972	3060	772	2448	572	1836	373	1732	339	1732	339
14	6257	1796	5632	1593	5006	1391	4380	1188	3754	986	3129	783	2503	581	1877	378	1771	344	1771	344
15	6394	1821	5755	1615	5115	1410	4476	1205	3837	999	3197	794	2558	589	1918	383	1810	348	1810	348
16	6531	1846	5878	1638	5225	1429	4572	1221	3919	1013	3265	805	2612	597	1959	389	1848	353	1848	353
17	6668	1871	6001	1660	5334	1449	4667	1238	4001	1027	3334	816	2667	605	2000	394	1887	358	1887	358
18	6805	1896	6124	1682	5444	1468	4763	1254	4083	1041	3402	827	2722	613	2041	399	1926	363	1926	363
19	6941	1921	6247	1704	5553	1488	4859	1271	4165	1054	3471	838	2777	621	2082	404	1965	368	1965	368
20	7078	1946	6370	1727	5662	1507	4955	1288	4247	1068	3539	849	2831	629	2123	410	2003	372	2003	372
21	7215	1971	6493	1749	5772	1527	5050	1304	4329	1082	3607	860	2886	637	2164	415	2042	377	2042	377
22	7352	1996	6616	1771	5881	1546	5146	1321	4411	1096	3676	871	2941	645	2205	420	2081	382	2081	382
23	7488	2021	6740	1793	5991	1565	5242	1337	4493	1109	3744	881	2995	653	2247	426	2119	387	2119	387
24	7625	2046	6863	1816	6100	1585	5338	1354	4575	1123	3813	892	3050	662	2288	431	2158	392	2158	392

Combination

Indoor unit : RAV-HM801BTP-E/TR

Outdoor unit : RAV-GM801ATP-E/TR, RAV-GM801ATJP-E

	Cooling		Heating	
	Capacity Q (W)	Power consumption W (W)	Capacity Q (W)	Power consumption W (W)
MINIMUM	1500	310	1500	310
RATING	6700	2380	7700	2320

Q: Capacity in W
W: Power Consumption in W

Cooling

Outdoor temperature (°C)		Load (%)									
		100	90	80	70	60	50	40	30	20	10
40	Q	6330	5690	5060	4430	3800	3160	2530	1900	1420	1420
	W	2600	2110	1660	1270	960	720	560	430	340	340
35	Q	6700	6030	5360	4690	4020	3350	2680	2010	1500	1500
	W	2380	1940	1520	1170	880	660	510	390	310	310
30	Q	7080	6370	5670	4960	4250	3540	2830	2130	1590	1590
	W	2170	1770	1390	1060	800	600	470	360	280	280
25	Q	7360	6620	5890	5150	4420	3680	2950	2210	1650	1650
	W	1970	1600	1260	960	730	550	420	320	260	260
20	Q	7470	6720	5980	5230	4480	3740	2990	2240	1670	1670
	W	1760	1440	1130	860	650	490	380	290	230	230

Heating

Outdoor temperature (°C)		Load (%)									
		100	90	80	70	60	50	40	30	20	10
15	Q	9100	8190	7280	6370	5460	4560	3640	2730	1820	1780
	W	2530	2120	1740	1390	1090	830	640	490	350	340
10	Q	8260	7440	6610	5780	4960	4130	3310	2470	1650	1610
	W	2410	2020	1660	1330	1040	790	610	470	330	320
7	Q	7700	6930	6160	5390	4620	3850	3080	2310	1540	1500
	W	2320	1940	1590	1280	1000	760	590	450	320	310
5	Q	5930	5340	4750	4150	3560	2970	2370	1780	1180	1160
	W	1990	1670	1370	1100	860	650	510	390	280	270
2	Q	5800	5220	4640	4060	3480	2900	2320	1740	1160	1130
	W	1960	1650	1350	1080	850	650	500	380	270	260
0	Q	5710	5140	4570	4000	3430	2860	2290	1710	1140	1110
	W	1940	1630	1340	1070	840	640	490	380	270	260
-5	Q	5510	4960	4410	3860	3310	2760	2200	1650	1100	1070
	W	1900	1590	1300	1050	820	620	480	370	260	250
-7	Q	5420	4880	4340	3800	3250	2710	2170	1620	1080	1060
	W	1880	1580	1290	1040	810	620	480	370	260	250
-10	Q	5010	4510	4010	3500	3000	2510	2000	1500	1000	980
	W	1810	1520	1240	1000	780	590	460	350	250	240
-15	Q	3850	3470	3080	2700	2310	1930	1540	1150	770	750
	W	1620	1360	1110	890	700	530	410	310	220	210

Combination

Indoor unit : RAV-HM1101BTP-E/TR

Outdoor unit : RAV-GM1101ATP-E/TR, RAV-GM1101ATJP-E

	Cooling		Heating	
	Capacity(W)	Power consumption (W)	Capacity(W)	Power consumption (W)
MINIMUM	3000	600	3000	600
RATING	9500	2990	11200	2990

Q: Capacity in W
W: Power Consumption in W

Cooling

Outdoor temperature(ºC)		Load(%)									
		100	**90**	**80**	**70**	**60**	**50**	**40**	**30**	**20**	**10**
40	Q	9000	8100	7200	6300	5400	4500	3600	2840	2840	2840
	W	3250	2600	2110	1690	1360	1050	830	650	650	650
35	Q	9500	8550	7600	6650	5700	4750	3800	3000	3000	3000
	W	2990	2390	1940	1560	1250	970	760	600	600	600
30	Q	10480	8960	7960	6970	5970	4980	3980	3140	3140	3140
	W	2820	2170	1760	1420	1130	880	690	540	540	540
25	Q	10880	9300	8270	7240	6200	5170	4130	3260	3260	3260
	W	2570	1970	1600	1290	1030	800	630	490	490	490
20	Q	11170	9550	8490	7430	6370	5310	4240	3350	3350	3350
	W	2320	1780	1450	1160	930	720	570	450	450	450

Heating

Outdoor temperature(ºC)		Load(%)									
		100	**90**	**80**	**70**	**60**	**50**	**40**	**30**	**20**	**10**
15	Q	13410	12060	10730	9390	8050	6700	5360	4020	3590	3590
	W	3280	2820	2370	1930	1540	1210	940	720	660	660
10	Q	12190	10950	9750	8530	7310	6090	4870	3660	3260	3260
	W	3120	2680	2250	1840	1470	1150	900	690	630	630
7	Q	11200	10080	8960	7840	6720	5600	4480	3360	3000	3000
	W	2990	2570	2160	1760	1410	1100	860	660	600	600
5	Q	8630	7760	6900	6040	5180	4310	3450	2590	2310	2310
	W	2570	2210	1850	1510	1210	950	740	570	520	520
2	Q	8440	7580	6750	5900	5060	4210	3370	2530	2260	2260
	W	2530	2180	1830	1490	1190	930	730	560	510	510
0	Q	8310	7480	6650	5820	4990	4150	3320	2490	2230	2230
	W	2510	2150	1810	1480	1180	920	720	550	500	500
-5	Q	8010	7200	6410	5610	4810	4000	3200	2400	2150	2150
	W	2450	2100	1770	1440	1150	900	700	540	490	490
-7	Q	7890	7090	6310	5520	4730	3940	3150	2370	2110	2110
	W	2420	2080	1750	1430	1140	890	700	540	490	490
-10	Q	7280	6550	5830	5100	4370	3640	2910	2180	1950	1950
	W	2330	2010	1680	1370	1100	860	670	520	470	470
-15	Q	5600	5040	4480	3920	3360	2800	2240	1680	1500	1500
	W	2080	1790	1510	1230	980	770	600	460	420	420

Combination

Indoor unit : RAV-HM1401BTP-E/TR

Outdoor unit : RAV-GM1401ATP-E/TR, RAV-GM1401ATJP-E

	Cooling		Heating	
	Capacity(W)	Power consumption (W)	Capacity(W)	Power consumption (W)
MINIMUM	3000	600	3000	600
RATING	12100	4420	13000	3600

Q: Capacity in W
W: Power Consumption in W

Cooling

Outdoor temperature(°C)		Load(%)									
		100	**90**	**80**	**70**	**60**	**50**	**40**	**30**	**20**	**10**
40	Q	11460	10310	9170	8030	6880	5730	4590	3440	2840	2840
	W	4810	3880	3050	2340	1770	1340	1020	760	650	650
35	Q	12100	10890	9680	8470	7260	6050	4840	3630	3000	3000
	W	4420	3570	2800	2150	1630	1230	940	700	600	600
30	Q	12680	11410	10140	8880	7610	6340	5080	3810	3140	3140
	W	4010	3240	2540	1950	1480	1120	850	640	540	540
25	Q	13160	11840	10530	9220	7900	6580	5270	3960	3260	3260
	W	3650	2950	2310	1770	1350	1020	780	580	500	500
20	Q	13520	12160	10810	9470	8120	6760	5410	4060	3350	3350
	W	3290	2660	2090	1600	1210	920	700	520	450	450

Heating

Outdoor temperature(°C)		Load(%)									
		100	**90**	**80**	**70**	**60**	**50**	**40**	**30**	**20**	**10**
15	Q	15570	14010	12460	10900	9340	7780	6230	4670	3590	3590
	W	3950	3320	2760	2280	1830	1450	1120	840	660	660
10	Q	14150	12730	11320	9900	8490	7070	5660	4240	3260	3260
	W	3760	3160	2630	2170	1740	1380	1070	800	630	630
7	Q	13000	11700	10400	9100	7800	6500	5200	3900	3000	3000
	W	3600	3030	2520	2080	1670	1320	1020	770	600	600
5	Q	10010	9010	8010	7010	6010	5010	4010	3000	2310	2310
	W	3090	2600	2160	1790	1430	1130	880	660	520	520
2	Q	9790	8810	7830	6850	5870	4900	3920	2940	2260	2260
	W	3050	2570	2130	1760	1410	1120	860	650	510	510
0	Q	9650	8680	7720	6750	5790	4820	3860	2890	2230	2230
	W	3020	2540	2110	1740	1400	1110	860	650	500	500
-5	Q	9300	8370	7440	6510	5580	4650	3720	2790	2150	2150
	W	2940	2480	2060	1700	1370	1080	830	630	490	490
-7	Q	9160	8240	7330	6410	5500	4580	3660	2750	2110	2110
	W	2910	2450	2040	1680	1350	1070	830	620	490	490
-10	Q	8460	7610	6770	5920	5080	4230	3380	2540	1950	1950
	W	2810	2360	1960	1620	1300	1030	800	600	470	470
-15	Q	6500	5850	5200	4550	3900	3250	2600	1950	1500	1500
	W	2510	2110	1760	1450	1160	920	710	540	420	420

Combination

Indoor unit : RAV-HM5601BTP-E/TR x 2 (Twin system)

Outdoor unit : RAV-GM1101ATP-E/TR, RAV-GM1101ATJP-E

	Cooling		Heating	
	Capacity(W)	Power consumption (W)	Capacity(W)	Power consumption (W)
MINIMUM	3000	600	3000	600
RATING	9500	2990	11200	2990

Q: Capacity in W
W: Power Consumption in W

Cooling

Outdoor temperature(ºC)		Load(%)									
		100	**90**	**80**	**70**	**60**	**50**	**40**	**30**	**20**	**10**
40	Q	9000	8100	7200	6300	5400	4500	3600	2840	2840	2840
	W	3250	2600	2110	1690	1360	1050	830	650	650	650
35	Q	9500	8550	7600	6650	5700	4750	3800	3000	3000	3000
	W	2990	2390	1940	1560	1250	970	760	600	600	600
30	Q	10480	8960	7960	6970	5970	4980	3980	3140	3140	3140
	W	2820	2170	1760	1420	1130	880	690	540	540	540
25	Q	10880	9300	8270	7240	6200	5170	4130	3260	3260	3260
	W	2570	1970	1600	1290	1030	800	630	490	490	490
20	Q	11170	9550	8490	7430	6370	5310	4240	3350	3350	3350
	W	2320	1780	1450	1160	930	720	570	450	450	450

Heating

Outdoor temperature(ºC)		Load(%)									
		100	**90**	**80**	**70**	**60**	**50**	**40**	**30**	**20**	**10**
15	Q	13410	12060	10730	9390	8050	6700	5360	4020	3590	3590
	W	3280	2820	2370	1930	1540	1210	940	720	660	660
10	Q	12190	10950	9750	8530	7310	6090	4870	3660	3260	3260
	W	3120	2680	2250	1840	1470	1150	900	690	630	630
7	Q	11200	10080	8960	7840	6720	5600	4480	3360	3000	3000
	W	2990	2570	2160	1760	1410	1100	860	660	600	600
5	Q	8630	7760	6900	6040	5180	4310	3450	2590	2310	2310
	W	2570	2210	1850	1510	1210	950	740	570	520	520
2	Q	8440	7580	6750	5900	5060	4210	3370	2530	2260	2260
	W	2530	2180	1830	1490	1190	930	730	560	510	510
0	Q	8310	7480	6650	5820	4990	4150	3320	2490	2230	2230
	W	2510	2150	1810	1480	1180	920	720	550	500	500
-5	Q	8010	7200	6410	5610	4810	4000	3200	2400	2150	2150
	W	2450	2100	1770	1440	1150	900	700	540	490	490
-7	Q	7890	7090	6310	5520	4730	3940	3150	2370	2110	2110
	W	2420	2080	1750	1430	1140	890	700	540	490	490
-10	Q	7280	6550	5830	5100	4370	3640	2910	2180	1950	1950
	W	2330	2010	1680	1370	1100	860	670	520	470	470
-15	Q	5600	5040	4480	3920	3360	2800	2240	1680	1500	1500
	W	2080	1790	1510	1230	980	770	600	460	420	420

Combination

Indoor unit : RAV-HM801BTP-E/TR x 2 (Twin system)

Outdoor unit : RAV-GM1401ATP-E/TR, RAV-GM1401ATJP-E

	Cooling		Heating	
	Capacity(W)	Power consumption (W)	Capacity(W)	Power consumption (W)
MINIMUM	3000	600	3000	600
RATING	12100	4420	13000	3600

Q: Capacity in W
W: Power Consumption in W

Cooling

Outdoor temperature(ºC)		Load(%)									
		100	**90**	**80**	**70**	**60**	**50**	**40**	**30**	**20**	**10**
40	Q	11460	10310	9170	8030	6880	5730	4590	3440	2840	2840
	W	4810	3880	3050	2340	1770	1340	1020	760	650	650
35	Q	12100	10890	9680	8470	7260	6050	4840	3630	3000	3000
	W	4420	3570	2800	2150	1630	1230	940	700	600	600
30	Q	12680	11410	10140	8880	7610	6340	5080	3810	3140	3140
	W	4010	3240	2540	1950	1480	1120	850	640	540	540
25	Q	13160	11840	10530	9220	7900	6580	5270	3960	3260	3260
	W	3650	2950	2310	1770	1350	1020	780	580	500	500
20	Q	13520	12160	10810	9470	8120	6760	5410	4060	3350	3350
	W	3290	2660	2090	1600	1210	920	700	520	450	450

Heating

Outdoor temperature(ºC)		Load(%)									
		100	**90**	**80**	**70**	**60**	**50**	**40**	**30**	**20**	**10**
15	Q	15570	14010	12460	10900	9340	7780	6230	4670	3590	3590
	W	3950	3320	2760	2280	1830	1450	1120	840	660	660
10	Q	14150	12730	11320	9900	8490	7070	5660	4240	3260	3260
	W	3760	3160	2630	2170	1740	1380	1070	800	630	630
7	Q	13000	11700	10400	9100	7800	6500	5200	3900	3000	3000
	W	3600	3030	2520	2080	1670	1320	1020	770	600	600
5	Q	10010	9010	8010	7010	6010	5010	4010	3000	2310	2310
	W	3090	2600	2160	1790	1430	1130	880	660	520	520
2	Q	9790	8810	7830	6850	5870	4900	3920	2940	2260	2260
	W	3050	2570	2130	1760	1410	1120	860	650	510	510
0	Q	9650	8680	7720	6750	5790	4820	3860	2890	2230	2230
	W	3020	2540	2110	1740	1400	1110	860	650	500	500
-5	Q	9300	8370	7440	6510	5580	4650	3720	2790	2150	2150
	W	2940	2480	2060	1700	1370	1080	830	630	490	490
-7	Q	9160	8240	7330	6410	5500	4580	3660	2750	2110	2110
	W	2910	2450	2040	1680	1350	1070	830	620	490	490
-10	Q	8460	7610	6770	5920	5080	4230	3380	2540	1950	1950
	W	2810	2360	1960	1620	1300	1030	800	600	470	470
-15	Q	6500	5850	5200	4550	3900	3250	2600	1950	1500	1500
	W	2510	2110	1760	1450	1160	920	710	540	420	420

2-4-6. Fan Static Characteristic

RAV-HM561BTP-E/TR

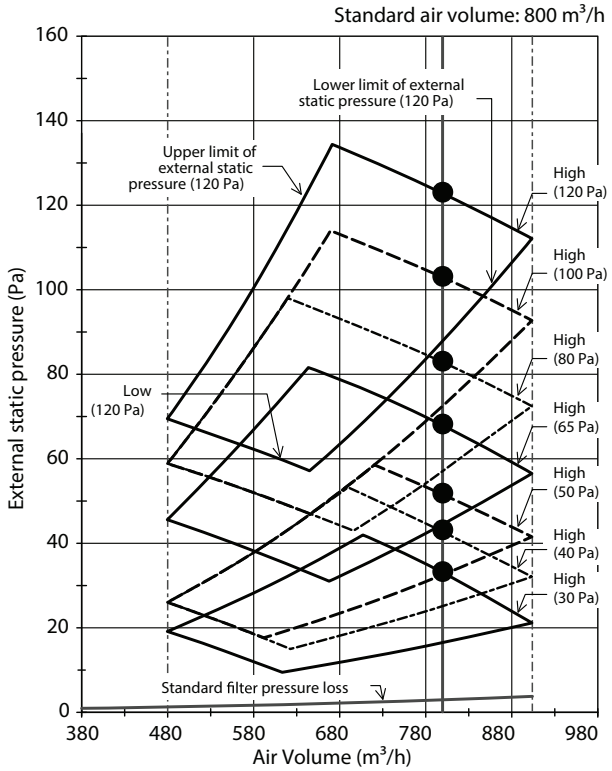

RAV-HM801BTP-E/TR

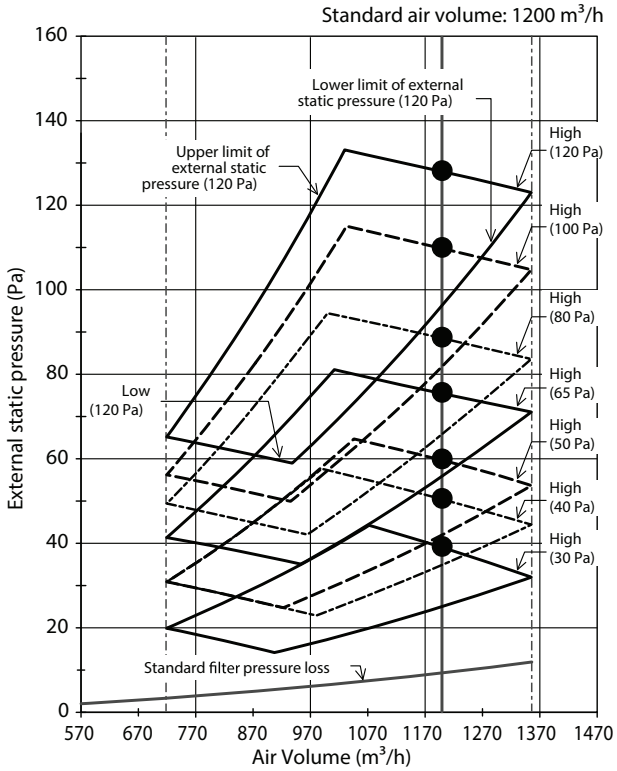

RAV-HM1101BTP-E/TR and RAV-HM1401BTP-E/TR

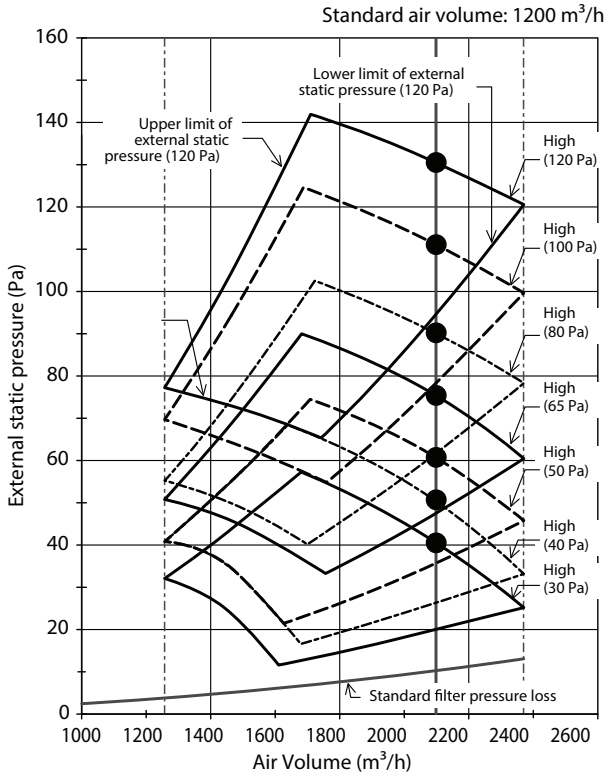

2-4-7. Sound Characteristics (NC curve)

RAV-HM561BTP-E/TR

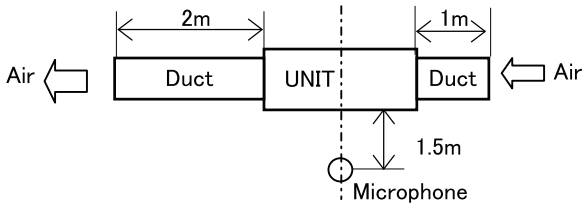

Measuring location

External static pressure 30Pa

FAN tap	H	M	L
Sound pressure level (dB(A))	33	29	25

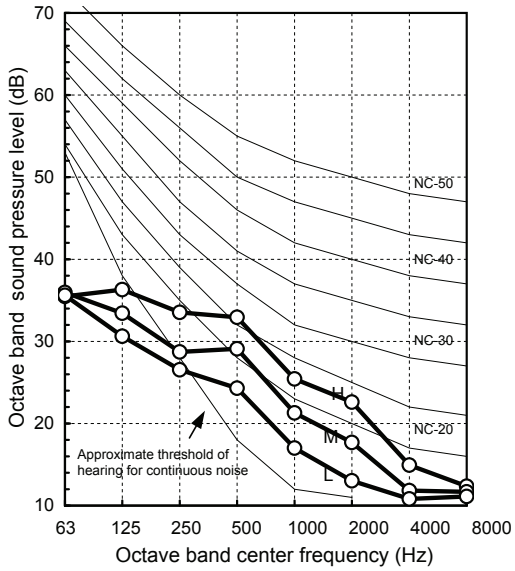

External static pressure 40Pa

FAN tap	H	M	L
Sound pressure level (dB(A))	34	30	26

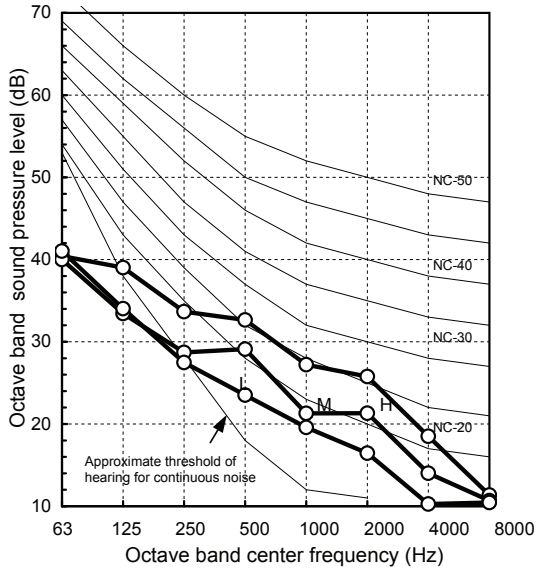

External static pressure 50Pa

FAN tap	H	M	L
Sound pressure level (dB(A))	35	31	26

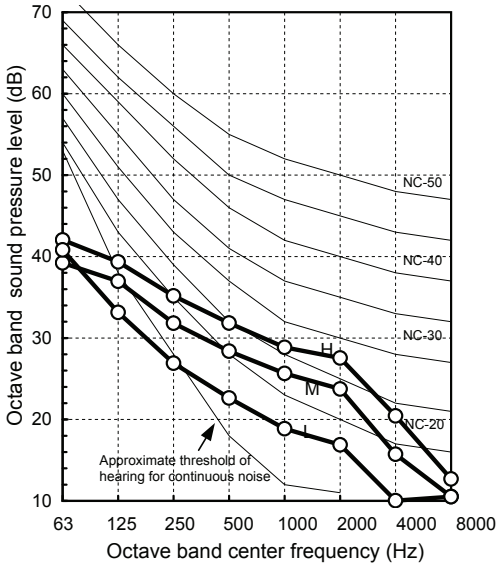

External static pressure 65Pa

FAN tap	H	M	L
Sound pressure level (dB(A))	36	32	29

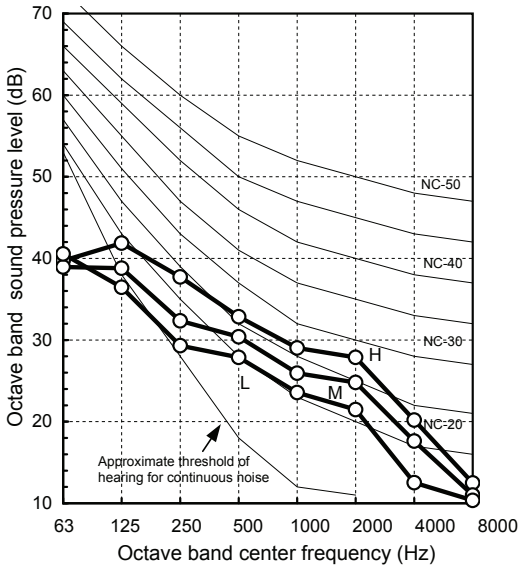

RAV-HM561BTP-E/TR

External static pressure 80Pa

FAN tap	H	M	L
Sound pressure level (dB(A))	37	33	31

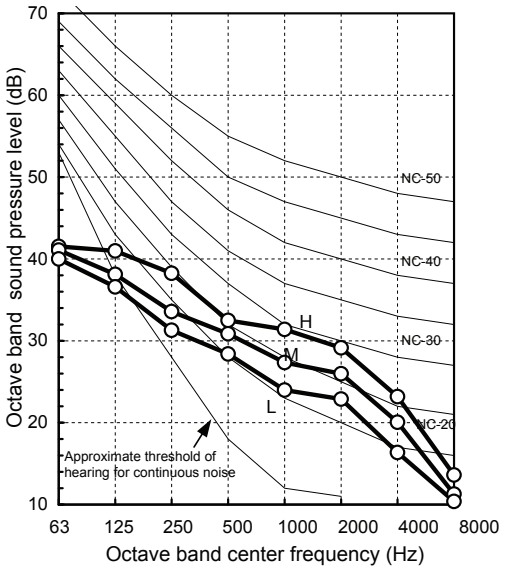

External static pressure 100Pa

FAN tap	H	M	L
Sound pressure level (dB(A))	38	35	31

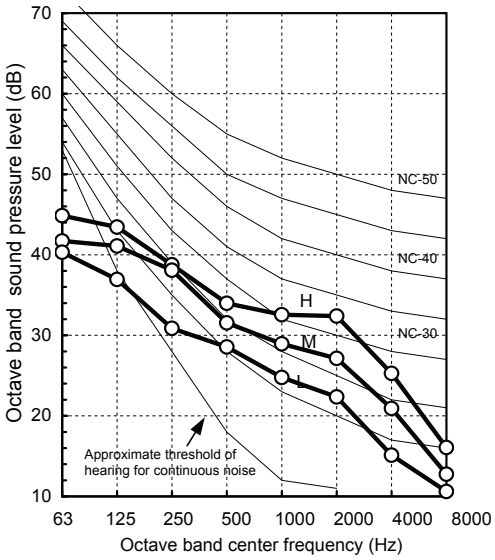

External static pressure 120Pa

FAN tap	H	M	L
Sound pressure level (dB(A))	39	35	31

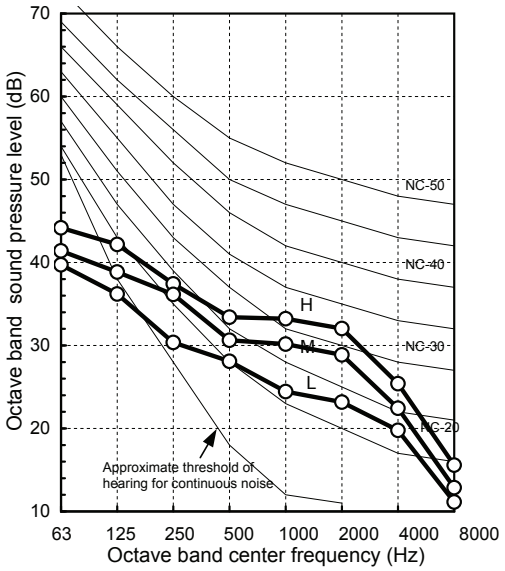

RAV-HM801BT P-E/TR

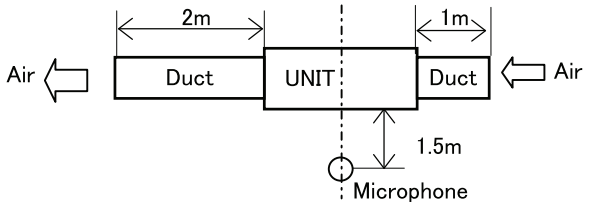

Measuring location

External static pressure 30Pa

FAN tap	H	M	L
Sound pressure level (dB(A))	34	30	26

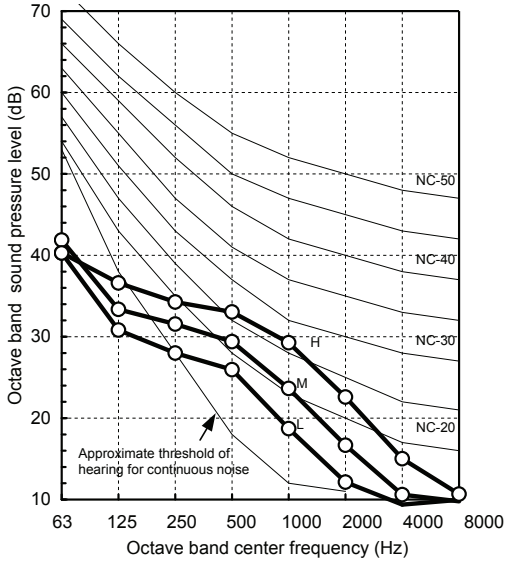

External static pressure 40Pa

FAN tap	H	M	L
Sound pressure level (dB(A))	35	32	29

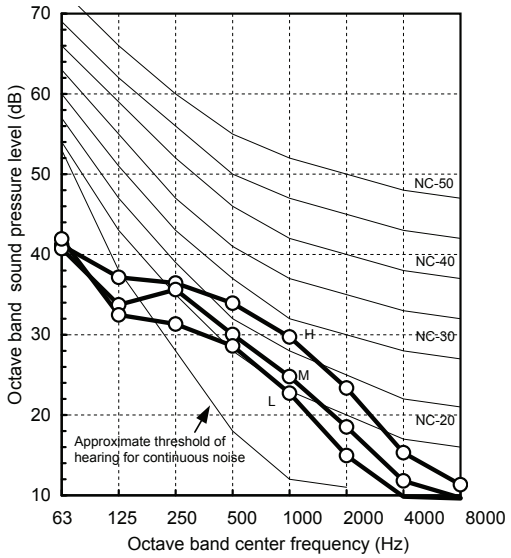

External static pressure 50Pa

FAN tap	H	M	L
Sound pressure level (dB(A))	38	33	29

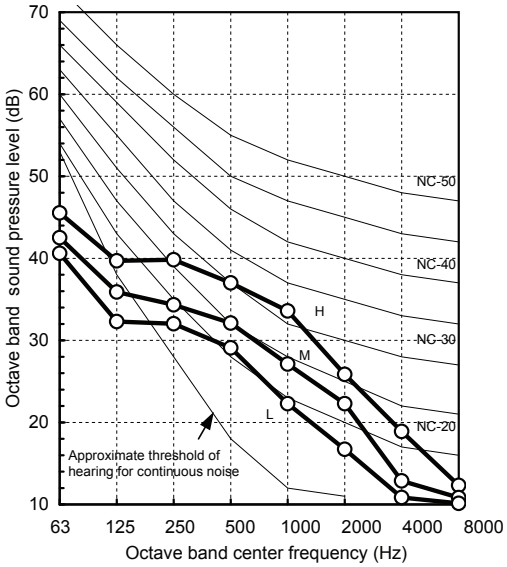

External static pressure 65Pa

FAN tap	H	M	L
Sound pressure level (dB(A))	39	35	32

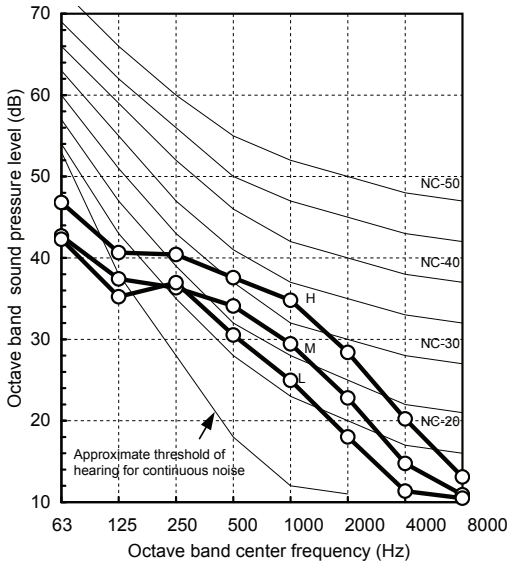

RAV-HM801BTP-E/TR

External static pressure 80Pa

FAN tap	H	M	L
Sound pressure level (dB(A))	42	38	34

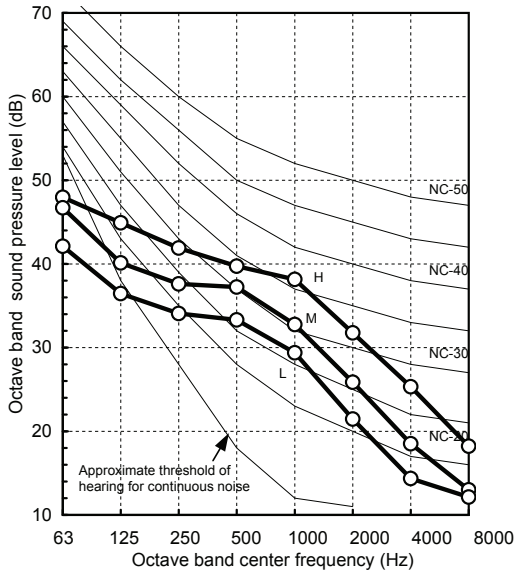

External static pressure 100Pa

FAN tap	H	M	L
Sound pressure level (dB(A))	42	39	33

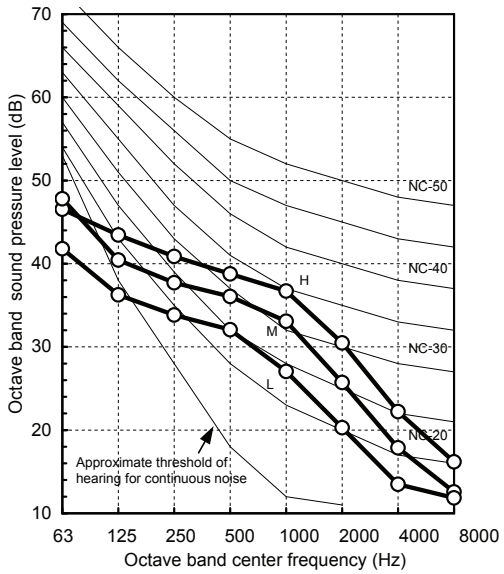

External static pressure 120Pa

FAN tap	H	M	L
Sound pressure level (dB(A))	44	41	34

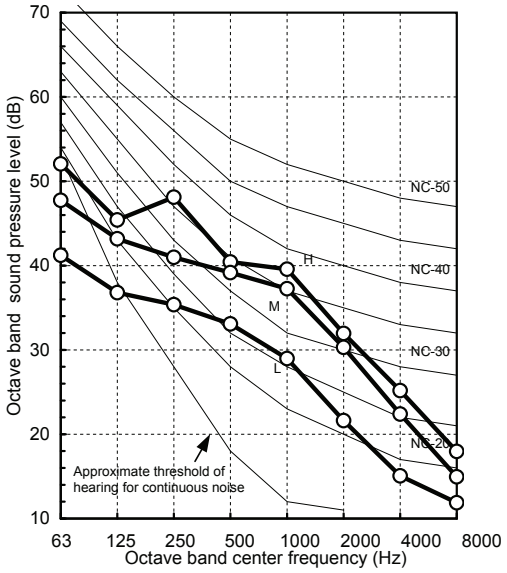

RAV-HM1101BTP-E/TR, RAV-HM1401BTP-E/TR

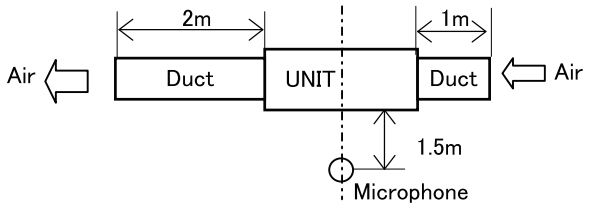

Measuring location

External static pressure 30Pa

FAN tap	H	M	L
Sound pressure level (dB(A))	39	36	33

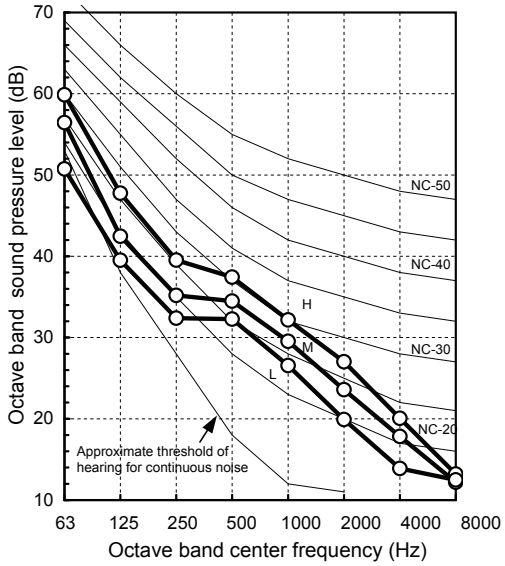

External static pressure 40Pa

FAN tap	H	M	L
Sound pressure level (dB(A))	39	36	33

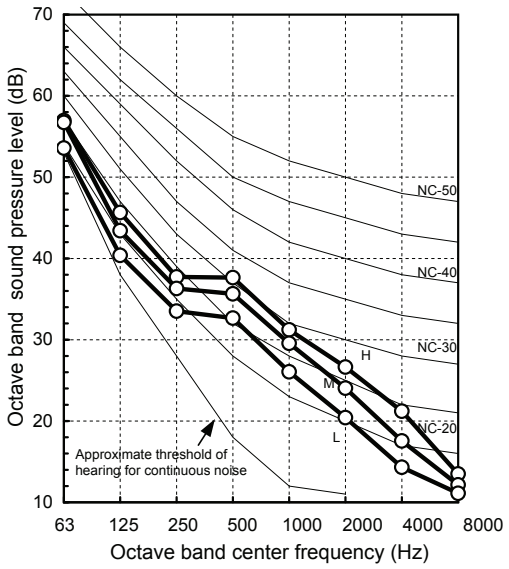

External static pressure 50Pa

FAN tap	H	M	L
Sound pressure level (dB(A))	40	36	33

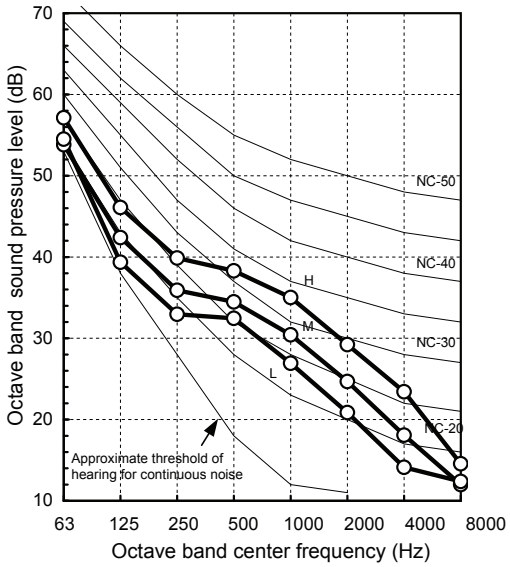

External static pressure 65Pa

FAN tap	H	M	L
Sound pressure level (dB(A))	41	39	36

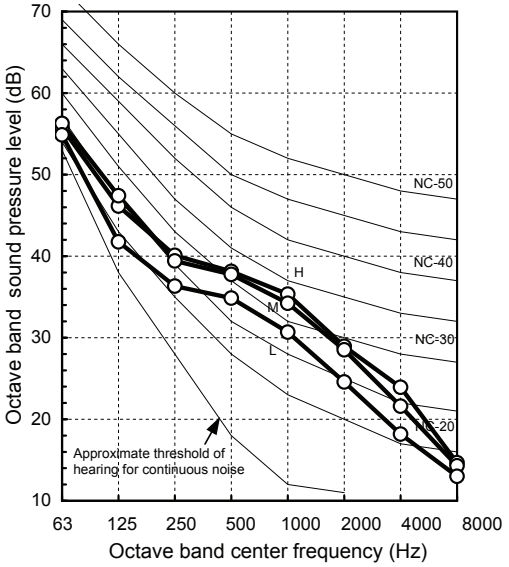

RAV-HM1101BTP-E/TR, RAV-HM1401BTP-E/TR

External static pressure 80Pa

FAN tap	H	M	L
Sound pressure level (dB(A))	41	40	36

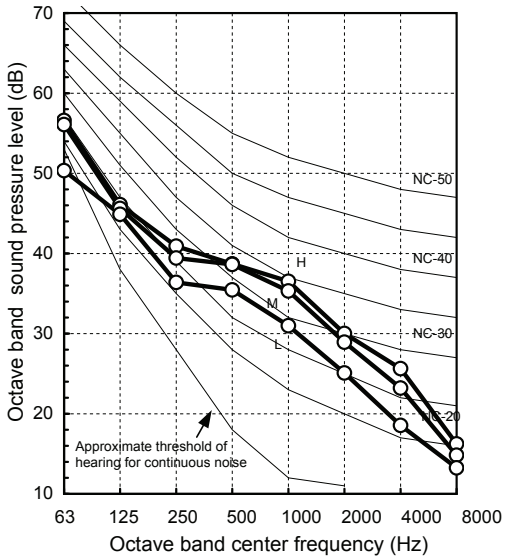

External static pressure 100Pa

FAN tap	H	M	L
Sound pressure level (dB(A))	43	41	39

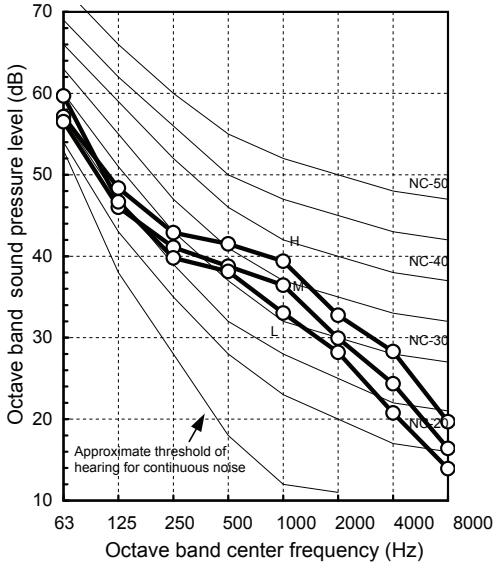

External static pressure 120Pa

FAN tap	H	M	L
Sound pressure level (dB(A))	44	42	39

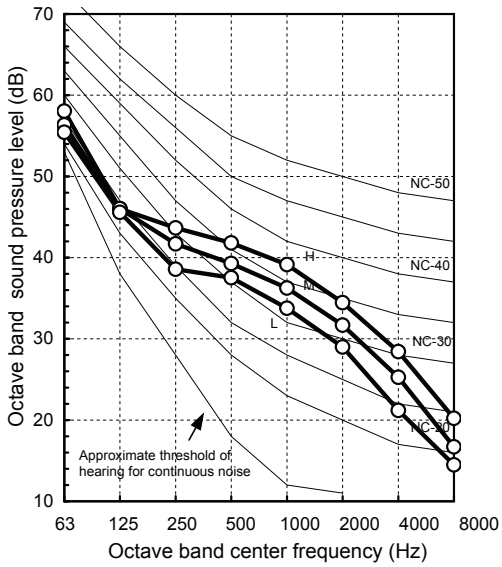

2-4-8. Accessories

Option Parts	Model Name	Applicable FCU
Auxiliary fresh air flange	TCB-FF151US-E	For Duct type
Zoning duct flange	TCB-SF56C6BPE	For Duct type
	TCB-SF80C6BPE	For Duct type
	TCB-SF160C6BPE	For Duct type

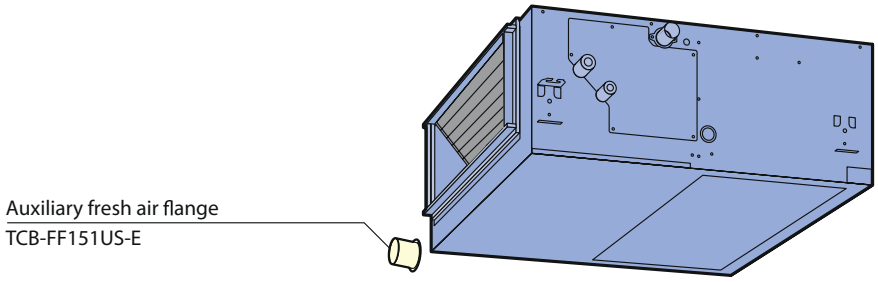

Appendix

Zoning duct flange TCB-SF56C6BPE	**Zoning duct flange** TCB-SF80C6BPE	**Zoning duct flange** TCB-SF160C6BPE
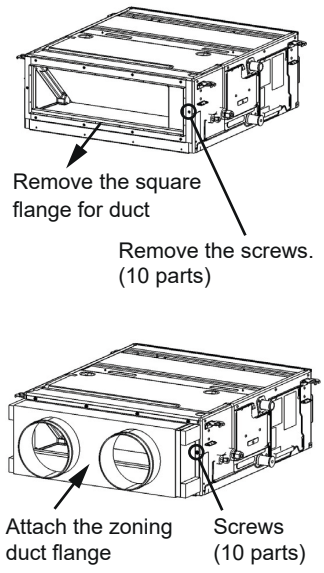	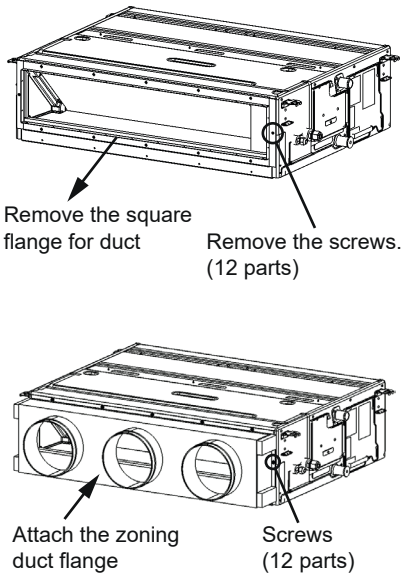	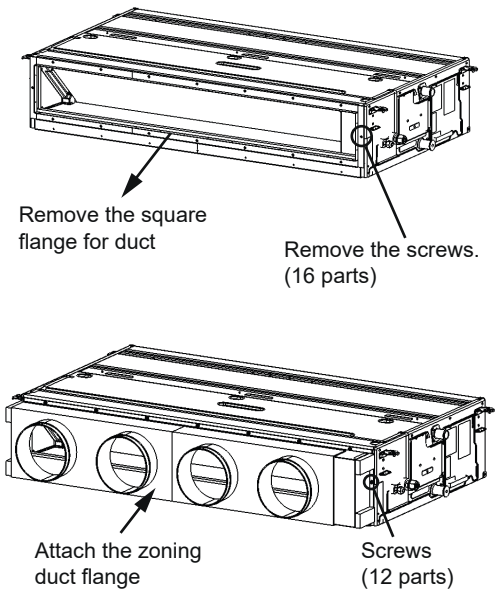

Remove screws on square flange for duct of indoor unit and attach the zoning duct flange with the screw.

External pressure loss characteristic

When you use these “Zoning duct flange” with Concealed Duct Type and High Static Presure type, pressure-loss characteristics depends on Air Flow.

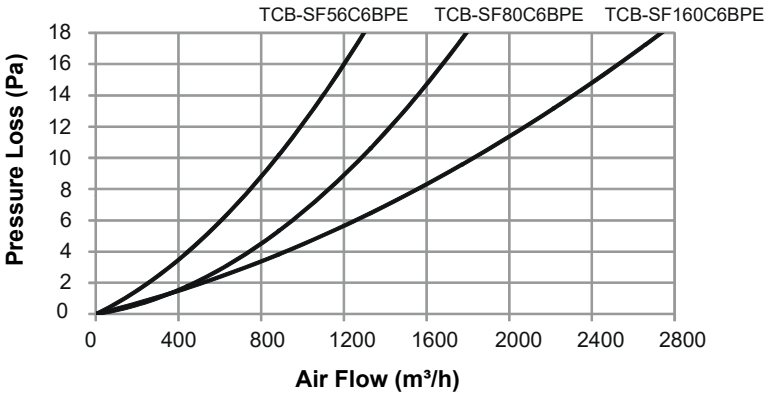

External dimension

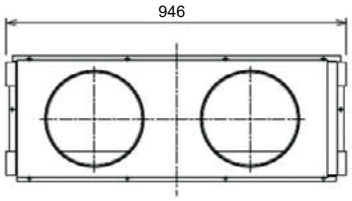

TCB-SF56C6BPE

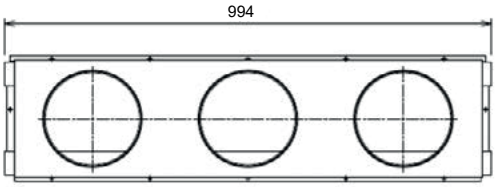

TCB-SF80C6BPE

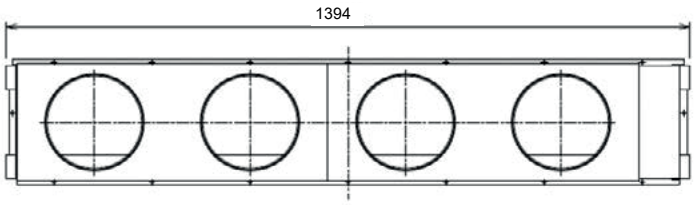

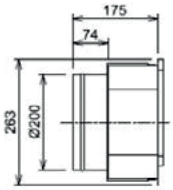

TCB-SF160C6BPE

Auxiliary fresh air flange

Arrange a flexible duct (locally procured).
It is necessary to install auxiliary fresh air flange.

INSTALLATION PROCEDURE

1 Using the knockout of the indoor unit, as a marker, cut off the steel plate with cutting pliers or cutter.
2 Install the auxiliary fresh air flange to the indoor unit with attached 4 fixing screws.

⚠ CAUTION

The fresh air shall be conditioned by heat reclaim ventilator or similar.
Emsure the fresh air volume is determined so that mixed suction air and fresh air maintain the operating temperature.
Recommended conditioned air temperature is 12ºC to 30ºC.
however, make a fresh air volume within 10% of standard.

Provide an air filter in fresh air duct. (Fresh air doesn't pass through the filter of indoor unit.)
Besure to insulate fresh air duct.
Please wire for inter-lock with fan of indoor unit by using CN60.

Inter - lock circuit

1. Connect the driving relay of the duct fan (DC 12 V) between 1 and 6 on the indoor P.C.board.
   Part indicated with a bold line is the connecting circuit.
   After installation, implement a test run to check that the duct fan of the indoor unit start / stop simultaneously.
   (Implement the test run following to the installation manual of the indoor unit.)

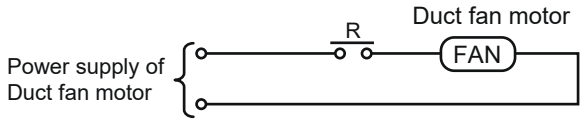

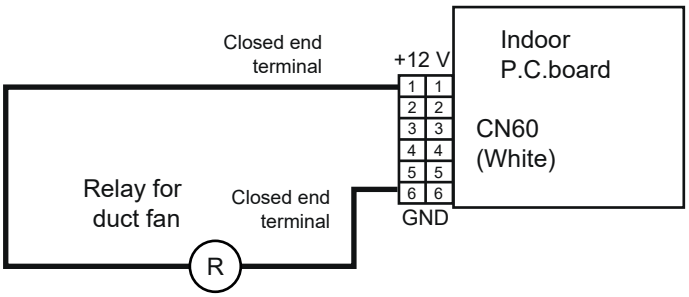

2-5. Under Ceiling Type

2-5-1. Specifications

2-5-2. Dimension

2-5-3. Wiring Diagrams

2-5-4. Sensible Capacity Table

2-5-5. Part Load Performance

2-5-6. Air Throw Distance Chart

2-5-7. Sound Characteristics (NC Curve)

2-5-8 Accessories

2-5-1. Specifications

Under Ceilling Type <Single Type>

Model		Indoor unit		RAV-HM401CTP-E/TR	RAV-HM561CTP-E/TR	RAV-HM801CTP-E/TR	RAV-HM1101CTP-E/TR	RAV-HM1401CTP-E/TR
		Outdoor unit (RAV-GM***ATJP-E)		RAV-GM401ATP-E/TR	RAV-GM561ATP-E1/TR1	RAV-GM801ATP-E/TR	RAV-GM1101ATP-E/TR	RAV-GM1401ATP-E/TR
Cooling capacity			(kW)	3.6 < 0.9-4.0 >	5.0 < 1.5 - 5.6 >	6.9 < 1.5 - 7.4 >	9.5 < 3.0 - 11.2 >	12.1 < 3.0 - 13.2 >
Heating capacity			(kW)	4.0 < 0.8-5.0 >	5.3 < 1.5 - 6.3 >	7.7 < 1.5 - 9.0 >	11.2 < 3.0 - 13.0 >	13.0 < 3.0 - 16.0 >
Power supply				1 phase 220V-240V/50Hz, 1phase 220V/60Hz				
Electrical characteristics	Cooling	Running current	(A)	4.10-3.75	7.54 - 6.92	11.15 - 10.22	14.30-13.10	21.40-19.60
		Power consumption	(kW)	0.83	1.61	2.38	2.95	4.42
		Power factor	(%)	92	97	97	94	94
		EER		4.34	3.11	2.90	3.22	2.74
		SEER		6.34	5.50	5.62	5.86	5.36
	Heating	Running current	(A)	3.82-3.50	6.37 - 5.84	9.98 - 9.15	14.20-13.00	16.80-15.40
		Power consumption	(kW)	0.78	1.36	2.13	2.94	3.48
		Power factor	(%)	93	97	97	94	94
		COP		5.13	3.90	3.62	3.81	3.74
		SCOP		5.1	4.32	4.21	4.27	4.19
	Maximum current			9.15	15.5	15.5	22.8	22.8
Indoor unit								
Appearance		Main unit		Pure white				
Outer dimension		Main unit	Height (mm)	235				
			Width (mm)	952		1,270	1,586	
			Depth (mm)	690				
Total weight		Main unit	(kg)	23		29	37	
Fan unit		Fan		Centrifugal fan				
		Standard air flow	H/M/L (m3/h)	900 / 720 / 540		1410 / 1002 / 750	1860 / 1350 / 1020	2040 / 1530 / 1200
		Motor	(W)	94			139	
Air filter				Standard filter (Long life filter)				
Sound pressure level			H/M/L (dB)	37 / 35 / 28	37 / 35 / 28	41 / 36 / 29	44 / 38 / 32	46 / 41 / 35
Sound power level			H/M/L (dB)	52 / 50 / 43	52 / 50 / 43	56 / 51 / 44	59 / 53 / 47	61 / 56 / 50
Controller (Sold Separately)				VP20				
Outdoor unit								
Air Flow			(m3/h)	2200	2,400	2,700	4,080	4,200
Outer dimension		Height	(mm)	550	550		890	
		Width	(mm)	780	780		900	
		Depth	(mm)	290	290		320	
Total weight		Main unit	(kg)	39	40	44	68	
Pipe		Min. length	(m)	2.0	5.0			
		Max. total length	(m)	20.0	30.0		50.0	
Flare Connections		Gas side	(mm)	12.7	12.7	15.9		
		Liquid side	(mm)	6.4	6.4	9.5		
Sound pressure level		Cooling/Heating	(dB)	49 / 50	46 / 48	48 / 52	54 / 57	55 / 57
Sound power level		Cooling/Heating	(dB)	64 / 65	63 / 65	65 / 69	70 / 74	70 / 74
Operating Range		Cooling	(°C)	-15 / 46				
		Heating	(°C)	-15 / 15				

*1 : The cooling capacities and electrical characteristics are measured under the conditions specified by JIS B 8615 based on the reference piping. The reference piping consists of 5 m of main piping and 2.5 m of branch piping connected with 0 meter height.

*2 : The sound level are measured in an anechoic chamber in accordance with JIS B 8616. Normally, the values measured in the actual operating environment become larger than the indicated values due to the effects of external sound.

Note :

Rated conditions Cooling : Indoor air temperature 27°C DB/19°C WB, Outdoor air temperature 35°C DB
Heating : Indoor air temperature 20°C DB, Outdoor air temperature 7°C DB/6°C WB

Under Ceiling (Twin System)

Model		Indoor unit 1		RAV-HM561CTP-E/TR	RAV-HM801CTP-E/TR
		Indoor unit 2		RAV-HM561CTP-E/TR	RAV-HM801CTP-E/TR
		Outdoor unit	(RAV-GM***ATJP-E)	RAV-GM1104ATP-E/TR	RAV-GM1404ATP-E/TR
Cooling capacity			(kW)	9.5 < 3.0 - 11.2 >	12.1 < 3.0 - 13.2 >
Heating capacity			(kW)	11.2 < 3.0 - 13.0 >	13.0 < 3.0 - 16.0 >
Power supply				1 phase 220V-240V/50Hz, 1phase 220V/60Hz	
Electrical characteristics	Cooling	Running current	(A)	14.30-13.10	21.37 - 19.59
		Power consumption	(kW)	2.95	4.42
		Power factor	(%)	94	94
		EER		3.22	2.74
		SEER		5.85	5.36
	Heating	Running current	(A)	14.20-13.00	16.80-15.40
		Power consumption	(kW)	2.94	3.48
		Power factor	(%)	94	94
		COP		3.81	3.74
				4.28	4.19
	Maximum current			22.8	22.8
Indoor unit					
Appearance		Main unit		Pure White	
Outer dimension		Main unit	Height (mm)	235	
			Width (mm)	950	1,270
			Depth (mm)	690	
Total weight		Main unit		23	29
Fan unit		Fan		Centrifugal fan	
		Standard air flow	H/M/L (m3/h)	900 / 720 / 540	1410 / 1002 / 750
		Motor	(W)	94	
Air filter				Long life filter	
Sound pressure level			H/M/L (dB)	37 / 35 / 28	41 / 36 / 29
Sound power level			H/M/L (dB)	52 / 50 / 43	56 / 51 / 44
Connecting pipe		Drain port		VP20	
Outdoor unit					
Air Flow			(m3/h)	4,080	4,200
Outer dimension		Height	(mm)	890	
		Width	(mm)	900	
		Depth	(mm)	320	
Total weight		Main unit	(kg)	68	
Pipe		Min. length	(m)	5	
		Max. total length	(m)	50	
Flare Connections		Main	Gas (mm)	15.9	
			Liquid (mm)	9.5	
		Branch	Gas (mm)	12.7	
			Liquid (mm)	6.4	
Sound pressure level		Cooling/Heating	(dB)	54 / 57	55 / 57
Sound power level		Cooling/Heating	(dB)	70 / 74	70 / 74
Operating Range		Cooling	(°C)	-15 / 46	
		Heating	(°C)	-15 / 15	

*1 : The cooling capacities and electrical characteristics are measured under the conditions specified by JIS B 8615 based on the reference piping. The reference piping consists of 5 m of main piping and 2.5 m of branch piping connected with 0 meter height.

*2 : The sound level are measured in an anechoic chamber in accordance with JIS B 8616. Normally, the values measured in the actual operating environment become larger than the indicated values due to the effects of external sound.

Note :

Rated conditions Cooling : Indoor air temperature 27°C DB/19°C WB, Outdoor air temperature 35°C DB
Heating : Indoor air temperature 20°C DB, Outdoor air temperature 7°C DB/6°C WB

2-5-2. Dimension

RAV-HM401CTP-E/TR and RAV-HM561CTP-E/TR

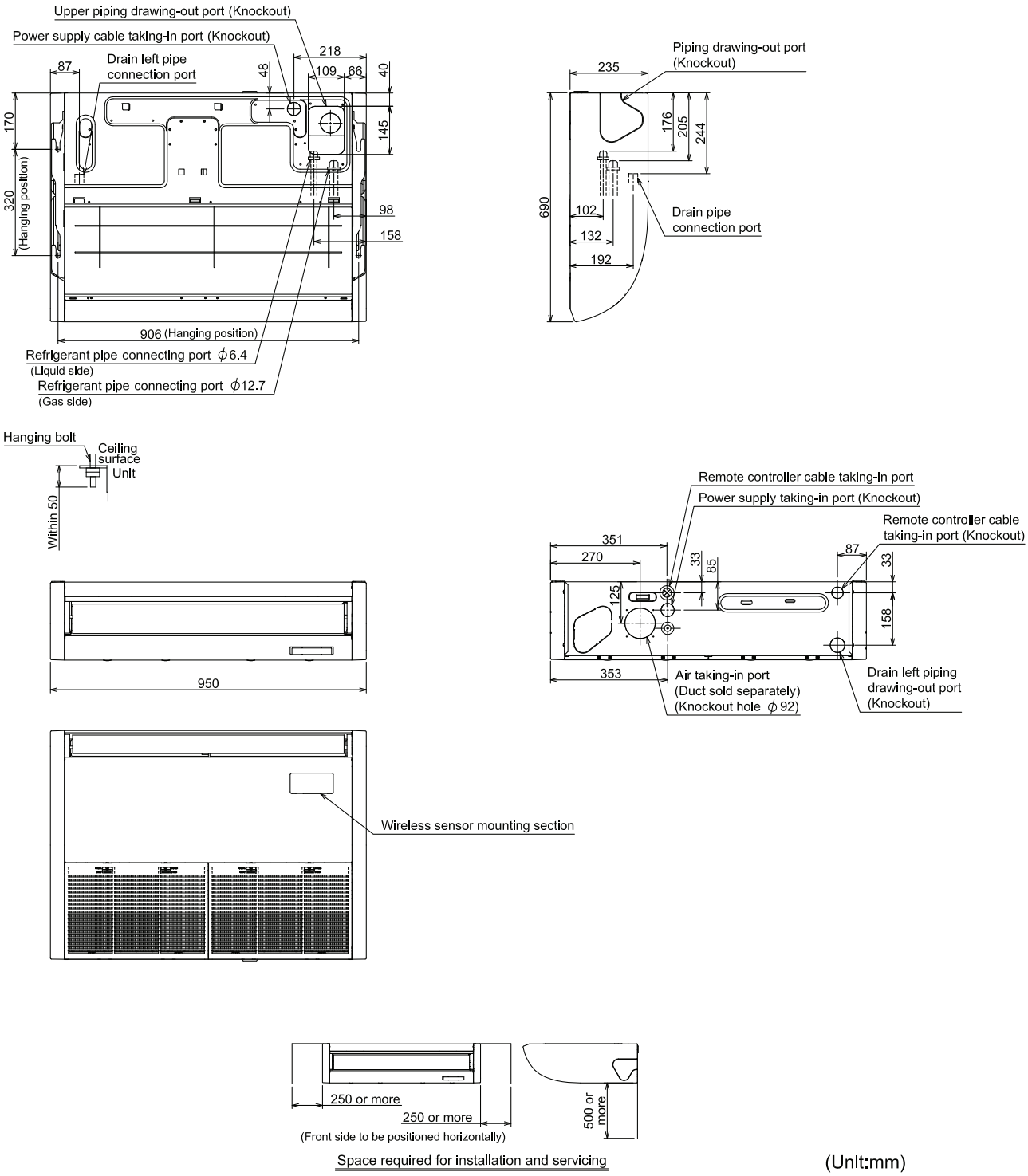

RAV-HM801CTP-E/TR

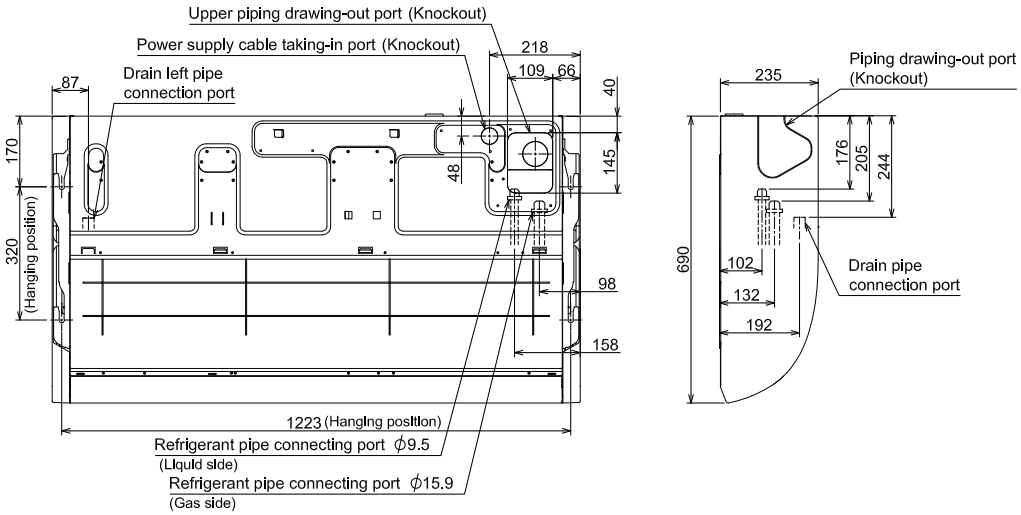

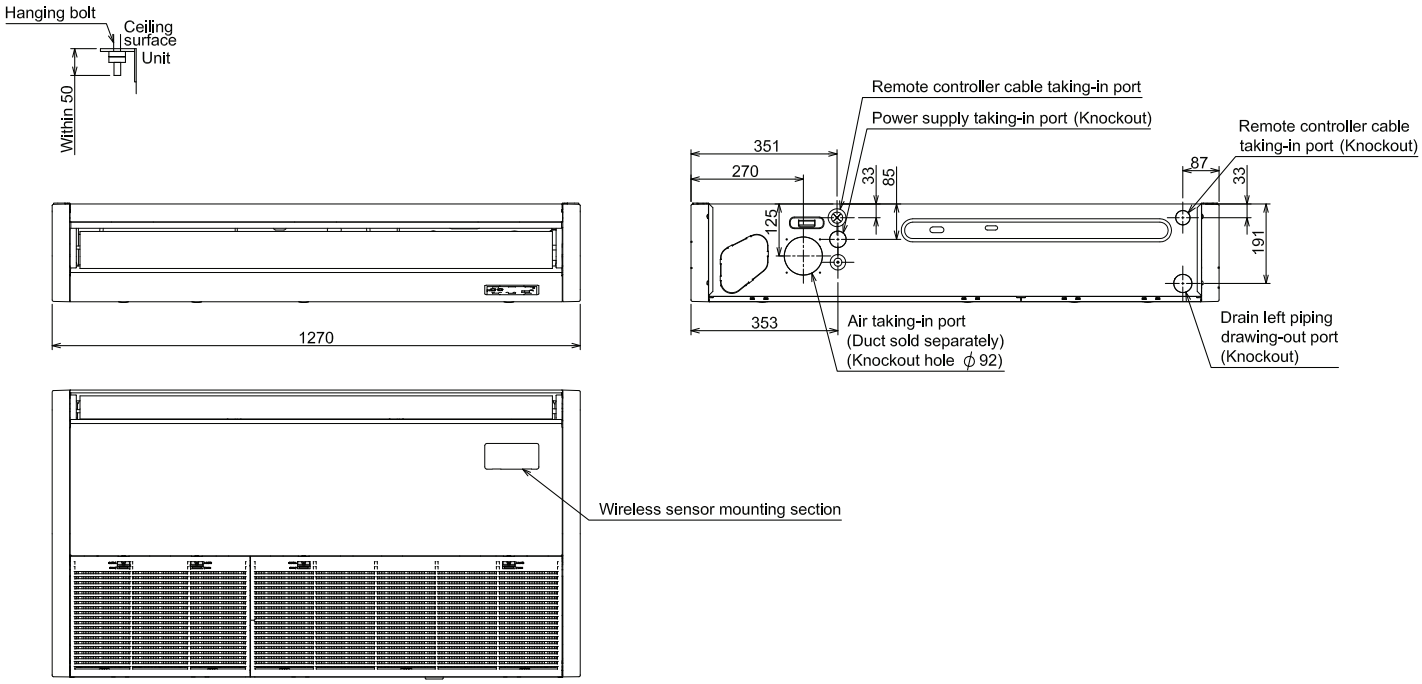

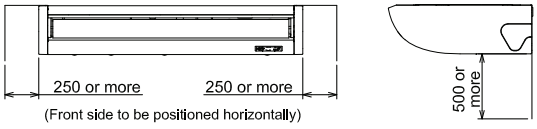

Space required for installation and servicing

(Unit:mm)

RAV-HM1101CTP-E/TR, RAV-HM1401CTP-E/TR

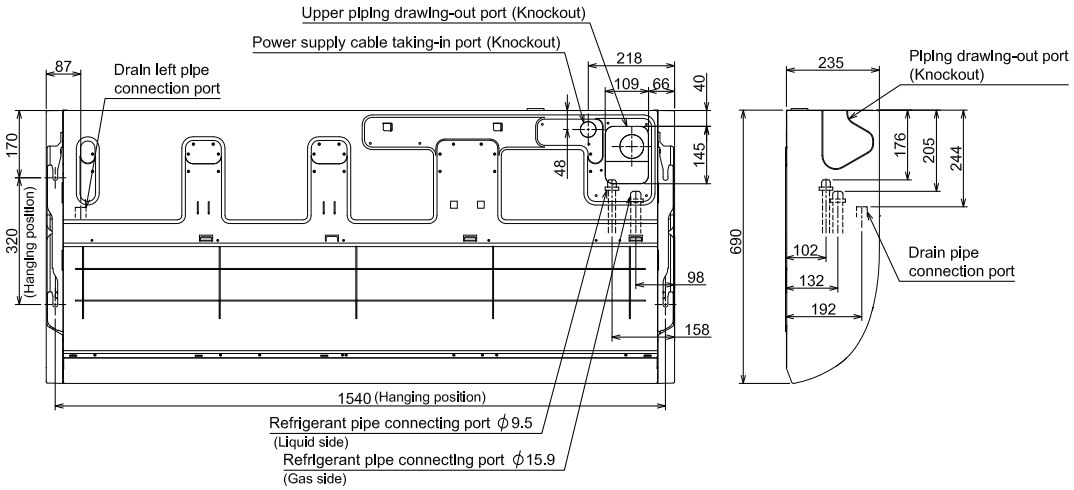

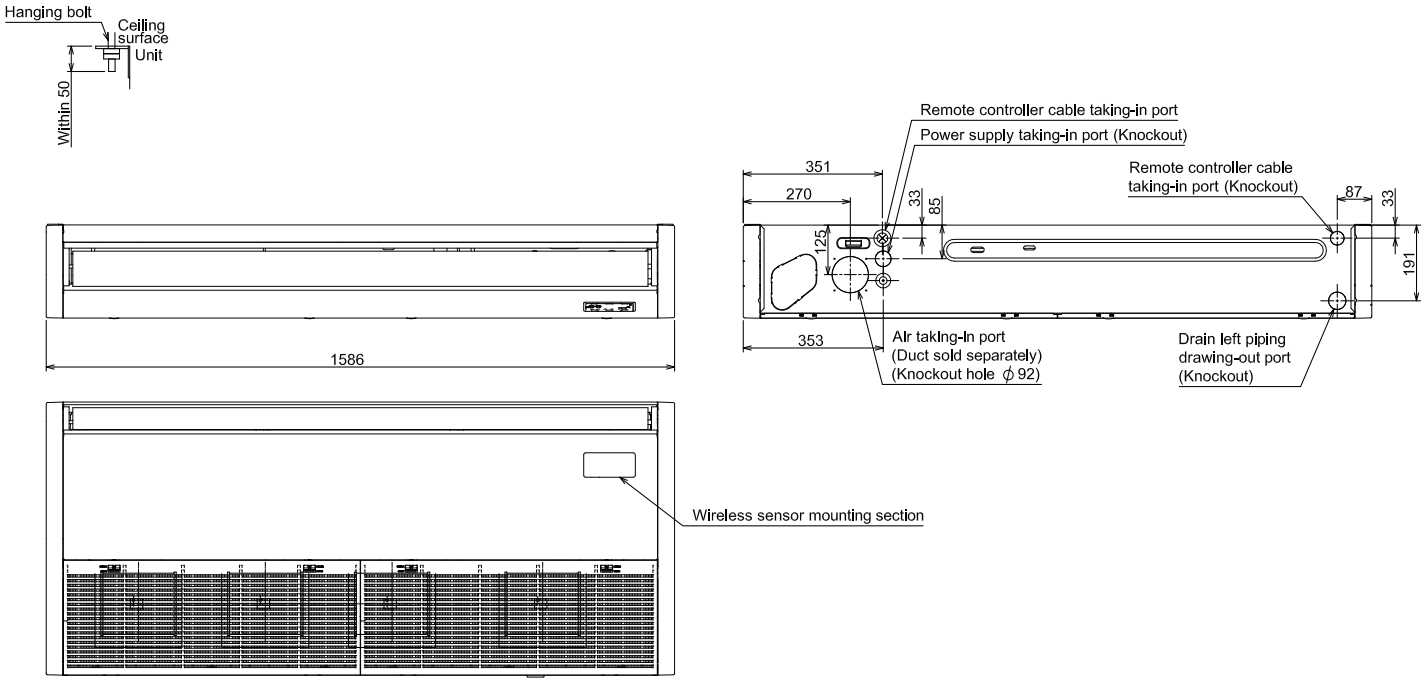

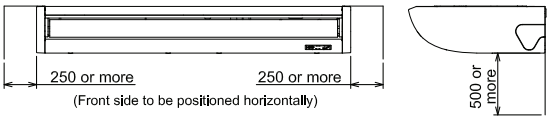

Space required for installation and servicing

(Unit:mm)

2-5-3. Wiring Diagrams

RAV-HM401CTP-E/TR, RAV-HM561CTP-E/TR, RAV-HM801CTP-E/TR, RAV-HM1101CTP-E/TR, RAV-HM1401CTP-E/TR

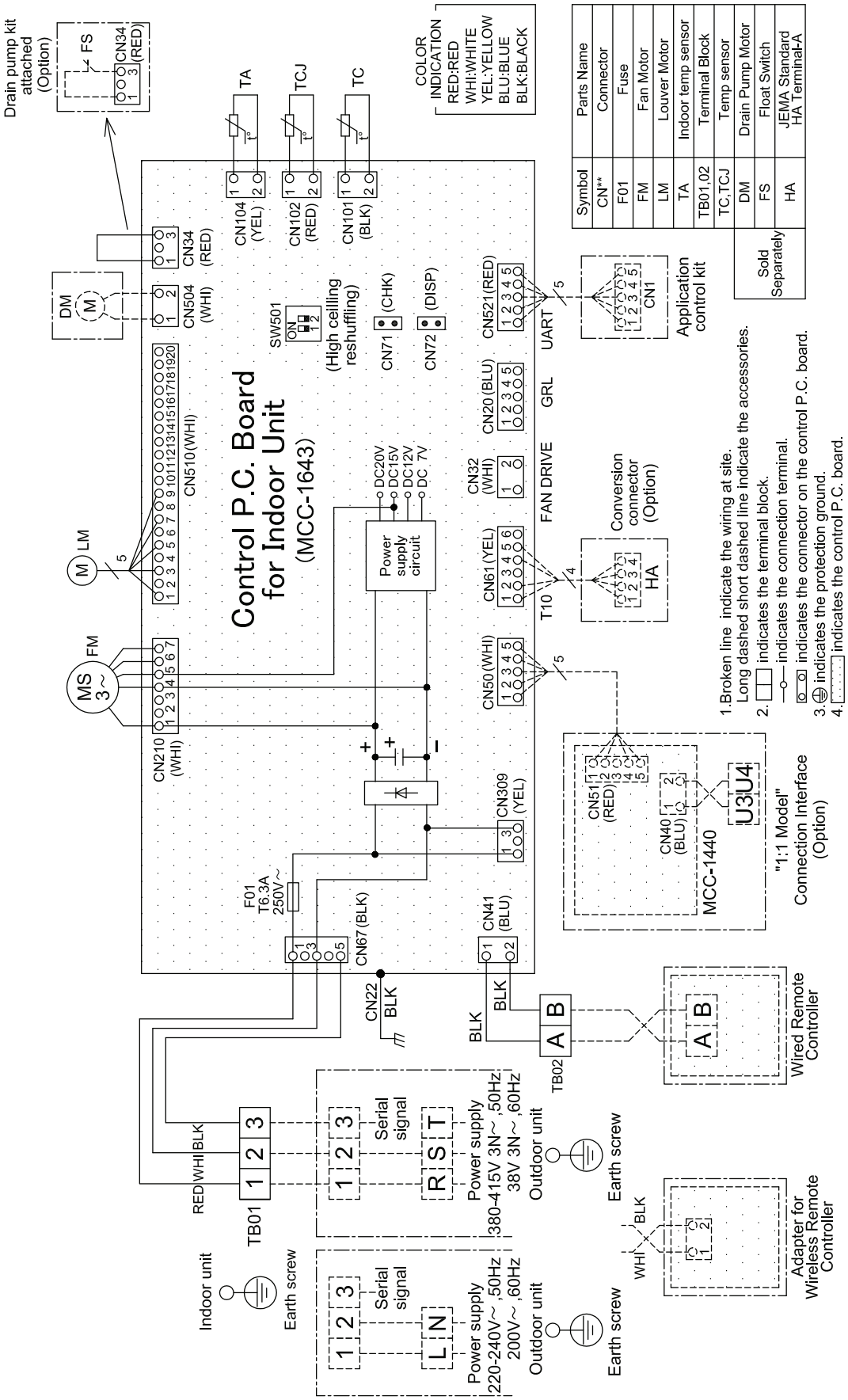

2-5-4. Sensible Capacity Table

Digital Inverter R32 Sensible Heat Capacity : RAV-HM***CTP-E/TR

		indoor air temp.																	
unit size	outdoor air temp . CDB	14.0CWB 20.0CDB		15.0CWB 21.5CDB		16.0CWB 23.0CDB		17.0CWB 24.5CDB		18.0CWB 26.0CDB		19.0CWB 27.0CDB		20.0CWB 28.0CDB		22.0CWB 30.0CDB		24.0CWB 32.0CDB	
		TC	SHC	TC	SHC	TC	SHC	TC	SHC	TC	SHC	TC	SHC	TC	SHC	TC	SHC	TC	SHC
401	10.0	3.54	3.07	3.67	3.14	3.91	3.27	4.01	3.34	4.19	3.48	4.31	3.48	4.44	3.47	4.70	3.44	4.92	3.38
	12.0	3.51	3.04	3.63	3.11	3.87	3.24	3.97	3.31	4.15	3.45	4.27	3.44	4.39	3.44	4.65	3.41	4.87	3.35
	14.0	3.47	3.01	3.59	3.08	3.83	3.21	3.92	3.27	4.10	3.41	4.23	3.40	4.35	3.40	4.60	3.37	4.81	3.31
	16.0	3.43	2.97	3.55	3.04	3.79	3.17	3.88	3.24	4.06	3.37	4.18	3.36	4.30	3.36	4.55	3.33	4.76	3.27
	18.0	3.39	2.94	3.51	3.00	3.74	3.13	3.83	3.20	4.01	3.33	4.13	3.32	4.24	3.32	4.50	3.29	4.70	3.23
	20.0	3.35	2.90	3.46	2.97	3.70	3.09	3.78	3.16	3.96	3.29	4.08	3.28	4.19	3.28	4.44	3.25	4.64	3.19
	21.0	3.32	2.88	3.44	2.95	3.67	3.07	3.76	3.14	3.93	3.26	4.05	3.26	4.16	3.26	4.41	3.23	4.61	3.17
	23.0	3.28	2.84	3.39	2.90	3.62	3.03	3.71	3.09	3.88	3.22	3.99	3.21	4.10	3.21	4.35	3.18	4.55	3.13
	25.0	3.22	2.79	3.34	2.86	3.56	2.98	3.64	3.04	3.81	3.17	3.92	3.16	4.04	3.16	4.27	3.13	4.47	3.07
	27.0	3.18	2.75	3.29	2.82	3.51	2.94	3.59	3.00	3.76	3.12	3.87	3.12	3.98	3.12	4.22	3.09	4.41	3.03
	29.0	3.13	2.71	3.24	2.77	3.45	2.89	3.54	2.95	3.70	3.07	3.81	3.07	3.92	3.07	4.15	3.04	4.34	2.98
	31.0	3.07	2.66	3.18	2.72	3.39	2.84	3.47	2.90	3.63	3.02	3.74	3.01	3.85	3.01	4.08	2.99	4.26	2.93
	33.0	3.02	2.61	3.12	2.67	3.33	2.79	3.41	2.85	3.57	2.96	3.67	2.96	3.78	2.96	4.00	2.93	4.19	2.88
	35.0	2.96	2.56	3.06	2.62	3.27	2.73	3.34	2.79	3.50	2.90	3.60	2.90	3.70	2.90	3.92	2.87	4.10	2.82
	37.0	2.90	2.51	3.00	2.57	3.20	2.68	3.28	2.74	3.43	2.85	3.53	2.84	3.63	2.84	3.85	2.82	4.02	2.77
	39.0	2.84	2.46	2.94	2.52	3.14	2.62	3.21	2.68	3.36	2.79	3.46	2.78	3.56	2.78	3.77	2.76	3.94	2.71

		indoor air temp.																	
unit size	outdoor air temp. CDB	14.0CWB 20.0CDB		15.0CWB 21.5CDB		16.0CWB 23.0CDB		17.0CWB 24.5CDB		18.0CWB 26.0CDB		19.0CWB 27.0CDB		20.0CWB 28.0CDB		22.0CWB 30.0CDB		24.0CWB 32.0CDB	
		TC	SHC	TC	SHC	TC	SHC	TC	SHC	TC	SHC	TC	SHC	TC	SHC	TC	SHC	TC	SHC
561	10.0	4.7	3.5	4.9	3.7	5.2	3.9	5.4	4.0	5.6	4.2	5.7	4.3	5.9	4.4	6.2	4.7	6.5	4.9
	12.0	4.7	3.5	4.9	3.7	5.2	3.9	5.3	4.0	5.5	4.1	5.7	4.3	5.8	4.4	6.2	4.6	6.5	4.9
	14.0	4.6	3.5	4.9	3.7	5.1	3.8	5.3	4.0	5.5	4.1	5.6	4.2	5.8	4.4	6.1	4.6	6.4	4.8
	16.0	4.6	3.5	4.8	3.6	5.1	3.8	5.3	3.9	5.4	4.1	5.6	4.2	5.8	4.3	6.1	4.6	6.4	4.8
	18.0	4.6	3.4	4.8	3.6	5.0	3.8	5.2	3.9	5.4	4.1	5.6	4.2	5.7	4.3	6.1	4.5	6.3	4.8
	20.0	4.5	3.4	4.8	3.6	5.0	3.8	5.2	3.9	5.4	4.0	5.5	4.1	5.7	4.3	6.0	4.5	6.3	4.7
	21.0	4.5	3.4	4.7	3.6	5.0	3.7	5.2	3.9	5.3	4.0	5.5	4.1	5.6	4.2	6.0	4.5	6.3	4.7
	23.0	4.5	3.3	4.7	3.5	4.9	3.7	5.1	3.8	5.3	4.0	5.4	4.1	5.6	4.2	5.9	4.4	6.2	4.6
	25.0	4.4	3.3	4.6	3.5	4.9	3.7	5.0	3.8	5.2	3.9	5.4	4.0	5.5	4.1	5.9	4.4	6.1	4.6
	27.0	4.4	3.3	4.6	3.4	4.8	3.6	5.0	3.7	5.2	3.9	5.3	4.0	5.5	4.1	5.8	4.3	6.0	4.5
	29.0	4.3	3.2	4.5	3.4	4.8	3.6	4.9	3.7	5.1	3.8	5.2	3.9	5.4	4.0	5.7	4.3	6.0	4.5
	31.0	4.2	3.2	4.5	3.3	4.7	3.5	4.9	3.6	5.0	3.8	5.2	3.9	5.3	4.0	5.6	4.2	5.9	4.4
	33.0	4.2	3.1	4.4	3.3	4.6	3.5	4.8	3.6	4.9	3.7	5.1	3.8	5.2	3.9	5.5	4.2	5.8	4.3
	35.0	4.1	3.1	4.3	3.2	4.5	3.4	4.7	3.5	4.9	3.6	5.0	3.8	5.1	3.9	5.4	4.1	5.7	4.3
	37.0	4.0	3.0	4.2	3.2	4.4	3.3	4.6	3.5	4.8	3.6	4.9	3.7	5.0	3.8	5.3	4.0	5.6	4.2
	39.0	3.9	3.0	4.2	3.1	4.4	3.3	4.5	3.4	4.7	3.5	4.8	3.6	4.9	3.7	5.2	3.9	5.5	4.1

		indoor air temp.																	
unit size	outdoor air temp. CDB	14.0CWB 20.0CDB		15.0CWB 21.5CDB		16.0CWB 23.0CDB		17.0CWB 24.5CDB		18.0CWB 26.0CDB		19.0CWB 27.0CDB		20.0CWB 28.0CDB		22.0CWB 30.0CDB		24.0CWB 32.0CDB	
		TC	SHC	TC	SHC	TC	SHC	TC	SHC	TC	SHC	TC	SHC	TC	SHC	TC	SHC	TC	SHC
801	10.0	6.5	4.9	6.8	5.2	7.2	5.4	7.4	5.6	7.7	5.8	7.9	6.0	8.1	6.2	8.6	6.5	9.0	6.8
	12.0	6.4	4.9	6.8	5.1	7.1	5.4	7.4	5.6	7.6	5.8	7.8	6.0	8.1	6.1	8.5	6.5	8.9	6.8
	14.0	6.4	4.9	6.7	5.1	7.1	5.4	7.3	5.6	7.6	5.8	7.8	5.9	8.0	6.1	8.5	6.4	8.9	6.7
	16.0	6.4	4.8	6.7	5.1	7.0	5.3	7.3	5.5	7.5	5.7	7.7	5.9	8.0	6.0	8.4	6.4	8.8	6.7
	18.0	6.3	4.8	6.6	5.0	7.0	5.3	7.2	5.5	7.5	5.7	7.7	5.8	7.9	6.0	8.4	6.4	8.7	6.6
	20.0	6.3	4.8	6.6	5.0	6.9	5.2	7.1	5.4	7.4	5.6	7.6	5.8	7.8	5.9	8.3	6.3	8.7	6.6
	21.0	6.2	4.7	6.5	5.0	6.9	5.2	7.1	5.4	7.4	5.6	7.6	5.8	7.8	5.9	8.3	6.3	8.6	6.6
	23.0	6.2	4.7	6.5	4.9	6.8	5.2	7.0	5.4	7.3	5.5	7.5	5.7	7.7	5.9	8.2	6.2	8.5	6.5
	25.0	6.1	4.6	6.4	4.9	6.7	5.1	7.0	5.3	7.2	5.5	7.4	5.6	7.6	5.8	8.1	6.1	8.5	6.4
	27.0	6.0	4.6	6.3	4.8	6.6	5.1	6.9	5.2	7.1	5.4	7.3	5.6	7.5	5.7	8.0	6.1	8.3	6.3
	29.0	5.9	4.5	6.2	4.7	6.6	5.0	6.8	5.2	7.0	5.3	7.2	5.5	7.4	5.7	7.9	6.0	8.2	6.3
	31.0	5.9	4.4	6.2	4.7	6.5	4.9	6.7	5.1	6.9	5.3	7.1	5.4	7.3	5.6	7.8	5.9	8.1	6.2
	33.0	5.8	4.4	6.1	4.6	6.4	4.8	6.6	5.0	6.8	5.2	7.0	5.3	7.2	5.5	7.6	5.8	8.0	6.1
	35.0	5.7	4.3	6.0	4.5	6.3	4.8	6.5	4.9	6.7	5.1	6.9	5.2	7.1	5.4	7.5	5.7	7.9	6.0
	37.0	5.6	4.2	5.9	4.4	6.1	4.7	6.4	4.8	6.6	5.0	6.8	5.1	7.0	5.3	7.4	5.6	7.7	5.9
	39.0	5.4	4.1	5.7	4.4	6.0	4.6	6.2	4.7	6.4	4.9	6.6	5.0	6.8	5.2	7.2	5.5	7.6	5.7

TC:Total Capacity [kW]
SHC:Sensible Heat Capacity [kW]

Product models : RAV-HM561CTP-E/TR ; RAV-GM561ATP-E1/TR1, RAV-GM561AT(J)P-E1

Specification of product at standard condition

Standard Condition		
	Indoor	27°C (DB) / 19°C (WB)
	Outdoor	35°C (DB) / 24°C (WB)

Total Cooling Capacity (TC)	5.00	kW
Sensible Heat Capacity (SHC)	3.77	kW

Outdoor air temperature	Indoor air temperature													
	20.0°C (DB) 14.0°C (WB)		23.0°C (DB) 16.0°C (WB)		26.0°C (DB) 18.0°C (WB)		27.0°C (DB) 19.0°C (WB)		28.0°C (DB) 20.0°C (WB)		30.0°C (DB) 22.0°C (WB)		32.0°C (DB) 24.0°C (WB)	
DB (°C)	TC	SHC	TC	SHC	TC	SHC	TC	SHC	TC	SHC	TC	SHC	TC	SHC
10	5.42	4.42	5.99	4.70	6.42	5.00	6.60	4.98	6.79	4.97	7.19	4.90	7.52	4.78
11	5.37	4.38	5.93	4.66	6.35	4.95	6.54	4.93	6.73	4.92	7.12	4.85	7.45	4.74
12	5.32	4.33	5.87	4.61	6.29	4.90	6.48	4.88	6.66	4.87	7.05	4.81	7.38	4.69
13	5.27	4.29	5.82	4.57	6.23	4.85	6.41	4.83	6.60	4.82	6.98	4.76	7.30	4.65
14	5.21	4.25	5.76	4.52	6.17	4.80	6.35	4.79	6.53	4.77	6.91	4.71	7.23	4.60
15	5.16	4.21	5.70	4.47	6.10	4.75	6.28	4.74	6.46	4.73	6.84	4.66	7.16	4.55
16	5.11	4.16	5.64	4.43	6.04	4.71	6.22	4.69	6.40	4.68	6.77	4.61	7.09	4.51
17	5.06	4.12	5.58	4.38	5.98	4.66	6.16	4.64	6.33	4.63	6.70	4.57	7.01	4.46
18	5.00	4.08	5.52	4.34	5.92	4.61	6.09	4.59	6.27	4.58	6.63	4.52	6.94	4.41
19	4.95	4.03	5.47	4.29	5.85	4.56	6.03	4.54	6.20	4.53	6.56	4.47	6.87	4.37
20	4.90	3.99	5.41	4.25	5.79	4.51	5.96	4.50	6.13	4.49	6.49	4.42	6.79	4.32
21	4.84	3.95	5.35	4.20	5.73	4.46	5.90	4.45	6.07	4.44	6.43	4.38	6.72	4.27
22	4.79	3.90	5.29	4.15	5.67	4.41	5.83	4.40	6.00	4.39	6.36	4.33	6.65	4.23
23	4.74	3.86	5.23	4.11	5.60	4.37	5.77	4.35	5.94	4.34	6.29	4.28	6.57	4.18
24	4.69	3.82	5.18	4.06	5.54	4.32	5.71	4.30	5.87	4.29	6.22	4.23	6.50	4.13
25	4.63	3.78	5.12	4.02	5.48	4.27	5.64	4.25	5.80	4.24	6.15	4.19	6.43	4.09
26	4.58	3.73	5.06	3.97	5.42	4.22	5.58	4.21	5.74	4.20	6.08	4.14	6.35	4.04
27	4.53	3.69	5.00	3.93	5.36	4.17	5.51	4.16	5.67	4.15	6.01	4.09	6.28	3.99
28	4.48	3.65	4.94	3.88	5.29	4.12	5.45	4.11	5.61	4.10	5.94	4.04	6.21	3.95
29	4.42	3.60	4.88	3.83	5.23	4.07	5.39	4.06	5.54	4.05	5.87	4.00	6.14	3.90
30	4.37	3.56	4.83	3.79	5.17	4.03	5.32	4.01	5.47	4.00	5.80	3.95	6.06	3.85
31	4.32	3.52	4.77	3.74	5.11	3.98	5.26	3.96	5.41	3.95	5.73	3.90	5.99	3.81
32	4.27	3.48	4.71	3.70	5.04	3.93	5.19	3.92	5.34	3.91	5.66	3.85	5.92	3.76
33	4.21	3.43	4.65	3.65	4.98	3.88	5.13	3.87	5.28	3.86	5.59	3.81	5.84	3.72
34	4.16	3.39	4.59	3.61	4.92	3.83	5.06	3.82	5.21	3.81	5.52	3.76	5.77	3.67
35	**4.11**	**3.35**	**4.54**	**3.56**	**4.86**	**3.78**	**5.00**	**3.77**	**5.14**	**3.76**	**5.45**	**3.71**	**5.70**	**3.62**
36	4.05	3.30	4.48	3.51	4.79	3.74	4.94	3.72	5.08	3.71	5.38	3.66	5.62	3.58
37	4.00	3.26	4.42	3.47	4.73	3.69	4.87	3.67	5.01	3.66	5.31	3.61	5.55	3.53
38	3.95	3.22	4.36	3.42	4.67	3.64	4.81	3.62	4.94	3.62	5.24	3.57	5.48	3.48
39	3.90	3.17	4.30	3.38	4.61	3.59	4.74	3.58	4.88	3.57	5.17	3.52	5.40	3.44
40	3.51	2.86	3.88	3.04	4.15	3.23	4.27	3.22	4.39	3.21	4.65	3.17	4.87	3.10
41	3.42	2.79	3.78	2.97	4.05	3.15	4.17	3.14	4.29	3.13	4.54	3.09	4.75	3.02
42	3.34	2.72	3.69	2.89	3.95	3.07	4.06	3.06	4.18	3.06	4.43	3.01	4.63	2.94
43	3.25	2.65	3.59	2.82	3.84	2.99	3.96	2.98	4.07	2.98	4.31	2.94	4.51	2.87
44	3.16	2.58	3.49	2.74	3.74	2.92	3.85	2.90	3.96	2.90	4.20	2.86	4.39	2.79
45	2.59	2.11	2.86	2.25	3.07	2.39	3.16	2.38	3.25	2.37	3.44	2.34	3.60	2.29
46	2.51	2.04	2.77	2.17	2.97	2.31	3.05	2.30	3.14	2.30	3.32	2.26	3.48	2.21

2-5-5. Part load performance

Combination

Indoor unit : RAV-HM401CTP-E/TR

Outdoor unit : RAV-GM401ATP-E/TR, RAV-GM401ATJP-E

	Cooling		Heating	
	Capacity Q (W)	Power consumption W (W)	Capacity Q (W)	Power consumption W (W)
MINIMUM	900	180	800	140
RATING	3600	830	4000	780

Q: Capacity in W
W: Power Consumption in W

Cooling

Outdoor temperature (°C)		Load (%)									
		100	90	80	70	60	50	40	30	20	10
40	Q	3330	3000	2670	2330	2000	1670	1330	1000	830	830
	W	910	790	680	570	470	370	280	210	200	200
35	Q	3600	3240	2880	2520	2160	1800	1440	1080	900	900
	W	830	720	620	520	430	340	260	190	180	180
30	Q	3790	3410	3040	2660	2280	1900	1520	1140	950	950
	W	750	650	560	470	390	310	230	170	160	160
25	Q	3920	3530	3140	2750	2350	1960	1570	1180	980	980
	W	670	580	500	420	350	270	210	150	150	150
20	Q	4080	3670	3260	2850	2450	2040	1630	1220	1020	1020
	W	600	520	450	370	310	240	190	140	130	130

Heating

Outdoor temperature (°C)		Load (%)									
		100	90	80	70	60	50	40	30	20	10
15	Q	4820	4340	3860	3380	2890	2410	1930	1450	960	960
	W	880	730	610	510	410	320	240	170	160	160
10	Q	4310	3880	3440	3010	2580	2150	1720	1290	860	860
	W	820	680	570	470	380	290	220	160	150	150
7	Q	4000	3600	3200	2800	2400	2000	1600	1200	800	800
	W	780	650	540	450	360	280	210	150	140	140
5	Q	3040	2730	2430	2120	1820	1520	1210	910	610	610
	W	720	600	500	410	330	260	190	140	130	130
2	Q	2890	2600	2320	2030	1740	1450	1160	870	580	580
	W	690	570	480	400	320	250	190	130	120	120
0	Q	2800	2520	2240	1960	1680	1400	1120	840	560	560
	W	670	560	460	390	310	240	180	130	120	120
-5	Q	2560	2310	2050	1800	1540	1280	1030	770	510	510
	W	620	520	430	360	290	220	170	120	110	110
-7	Q	2470	2220	1980	1730	1480	1240	990	740	490	490
	W	610	500	420	350	280	220	160	120	110	110
-10	Q	2250	2020	1800	1570	1350	1120	900	670	450	450
	W	580	480	400	330	270	210	160	110	100	100
-15	Q	1730	1560	1380	1210	1040	860	690	520	350	350
	W	510	430	360	300	240	180	140	100	90	90

Combination

Indoor unit : RAV-HM561CTP-E/TR

Outdoor unit : RAV-GM561ATP-E1/TR1, RAV-GM561ATJP-E1

Operation range		Cooling		Heating	
		Q	P	Q	P
MINIMUM	W	1200	290	1500	290
RATING	W	5000	1610	5300	1360
MAXIMUM	W	5600	1950	6300	2400

Cooling

Outdoor Temperature DB (°C)	Parts Load (%)																			
	100		90		80		70		60		50		40		30		20		10	
	Q	P	Q	P	Q	P	Q	P	Q	P	Q	P	Q	P	Q	P	Q	P	Q	P
10	6604	1033	5944	922	5283	810	4623	699	3963	587	3302	476	2642	364	1981	253	1585	186	1585	186
11	6540	1056	5886	942	5232	828	4578	714	3924	600	3270	486	2616	373	1962	259	1570	190	1570	190
12	6476	1079	5828	963	5181	846	4533	730	3886	614	3238	497	2590	381	1943	264	1554	194	1554	194
13	6412	1102	5771	983	5129	864	4488	746	3847	627	3206	508	2565	389	1924	270	1539	199	1539	199
14	6348	1125	5713	1004	5078	883	4443	761	3809	640	3174	518	2539	397	1904	276	1523	203	1523	203
15	6283	1148	5655	1025	5027	901	4398	777	3770	653	3142	529	2513	405	1885	281	1508	207	1508	207
16	6219	1172	5597	1045	4975	919	4353	792	3732	666	3110	540	2488	413	1866	287	1493	211	1493	211
17	6155	1195	5540	1066	4924	937	4309	808	3693	679	3078	550	2462	421	1847	293	1477	215	1477	215
18	6091	1218	5482	1086	4873	955	4264	824	3655	692	3045	561	2436	430	1827	298	1462	219	1462	219
19	6027	1241	5424	1107	4821	973	4219	839	3616	705	3013	572	2411	438	1808	304	1446	223	1446	223
20	5963	1264	5366	1128	4770	991	4174	855	3578	718	2981	582	2385	446	1789	309	1431	228	1431	228
21	5898	1287	5309	1148	4719	1009	4129	870	3539	732	2949	593	2359	454	1770	315	1416	232	1416	232
22	5834	1310	5251	1169	4667	1027	4084	886	3501	745	2917	603	2334	462	1750	321	1400	236	1400	236
23	5770	1333	5193	1189	4616	1045	4039	902	3462	758	2885	614	2308	470	1731	326	1385	240	1385	240
24	5706	1356	5135	1210	4565	1064	3994	917	3424	771	2853	625	2282	478	1712	332	1369	244	1369	244
25	5642	1379	5078	1230	4513	1082	3949	933	3385	784	2821	635	2257	486	1693	338	1354	248	1354	248
26	5578	1402	5020	1251	4462	1100	3904	948	3347	797	2789	646	2231	495	1673	343	1339	253	1339	253
27	5513	1425	4962	1272	4411	1118	3859	964	3308	810	2757	657	2205	503	1654	349	1323	257	1323	257
28	5449	1448	4904	1292	4359	1136	3814	980	3270	823	2725	667	2180	511	1635	355	1308	261	1308	261
29	5385	1472	4847	1313	4308	1154	3770	995	3231	837	2693	678	2154	519	1616	360	1292	265	1292	265
30	5321	1495	4789	1333	4257	1172	3725	1011	3193	850	2660	688	2128	527	1596	366	1277	269	1277	269
31	5257	1518	4731	1354	4205	1190	3680	1027	3154	863	2628	699	2103	535	1577	372	1262	273	1262	273
32	5193	1541	4673	1375	4154	1208	3635	1042	3116	876	2596	710	2077	543	1558	377	1246	278	1246	278
33	5128	1564	4616	1395	4103	1226	3590	1058	3077	889	2564	720	2051	552	1539	383	1231	282	1231	282
34	5064	1587	4558	1416	4051	1245	3545	1073	3039	902	2532	731	2026	560	1519	389	1215	286	1215	286
35	**5000**	**1610**	**4500**	**1436**	**4000**	**1263**	**3500**	**1089**	**3000**	**915**	**2500**	**742**	**2000**	**568**	**1500**	**394**	**1200**	**290**	**1200**	**290**
36	4936	1633	4442	1457	3949	1281	3455	1105	2962	928	2468	752	1974	576	1481	400	1185	294	1185	294
37	4872	1656	4385	1477	3897	1299	3410	1120	2923	942	2436	763	1949	584	1462	406	1169	298	1169	298
38	4808	1679	4327	1498	3846	1317	3365	1136	2885	955	2404	773	1923	592	1442	411	1154	302	1154	302
39	4743	1702	4269	1519	3795	1335	3320	1151	2846	968	2372	784	1897	600	1423	417	1138	307	1138	307
40	4272	1495	3845	1334	3418	1172	2991	1011	2563	850	2136	689	1709	527	1282	366	1025	269	1025	269
41	4167	1495	3751	1334	3334	1172	2917	1011	2500	850	2084	689	1667	527	1250	366	1000	269	1000	269
42	4062	1495	3656	1334	3250	1172	2844	1011	2437	850	2031	689	1625	527	1219	366	975	269	975	269
43	3958	1495	3562	1334	3166	1172	2770	1011	2375	850	1979	689	1583	527	1187	366	950	269	950	269
44	3853	1495	3467	1334	3082	1172	2697	1011	2312	850	1926	689	1541	527	1156	366	925	269	925	269
45	3157	1160	2841	1035	2526	910	2210	785	1894	660	1579	534	1263	409	947	284	758	209	758	209
46	3052	1160	2747	1035	2442	910	2137	785	1831	660	1526	534	1221	409	916	284	733	209	733	209

Heating

Outdoor Temperature DB (°C)	Parts Load (%)																			
	100		90		80		70		60		50		40		30		20		10	
	Q	P	Q	P	Q	P	Q	P	Q	P	Q	P	Q	P	Q	P	Q	P	Q	P
-15	2400	817	2160	727	1920	637	1680	548	1440	458	1200	369	960	279	720	189	679	174	679	174
-14	2550	845	2295	752	2040	660	1785	567	1530	474	1275	381	1020	289	765	196	722	180	722	180
-13	2700	874	2430	778	2160	682	1890	586	1620	490	1350	394	1080	298	810	203	764	186	764	186
-12	2850	902	2565	803	2280	704	1995	605	1710	506	1425	407	1140	308	855	209	807	192	807	192
-11	3000	931	2700	828	2400	726	2100	624	1800	522	1500	420	1200	318	900	216	849	198	849	198
-10	3150	959	2835	854	2520	749	2205	643	1890	538	1575	433	1260	328	945	222	892	204	892	204
-9	3300	987	2970	879	2640	771	2310	662	1980	554	1650	446	1320	337	990	229	934	211	934	211
-8	3451	1016	3105	904	2760	793	2415	681	2070	570	1725	459	1380	347	1035	236	977	217	977	217
-7	3601	1044	3240	930	2880	815	2520	701	2160	586	1800	471	1440	357	1080	242	1019	223	1019	223
-6	3627	1062	3264	946	2902	829	2539	712	2176	596	1814	479	1451	363	1088	246	1027	226	1027	226
-5	3654	1080	3288	961	2923	843	2558	724	2192	606	1827	487	1462	369	1096	250	1034	230	1034	230
-4	3681	1097	3313	977	2944	857	2576	736	2208	616	1840	495	1472	375	1104	254	1042	234	1042	234
-3	3707	1115	3337	993	2966	870	2595	748	2224	626	1854	503	1483	381	1112	259	1049	238	1049	238
-2	3734	1133	3361	1009	2987	884	2614	760	2240	636	1867	511	1494	387	1120	263	1057	242	1057	242
-1	3761	1150	3385	1024	3008	898	2632	772	2256	646	1880	519	1504	393	1128	267	1064	245	1064	245
0	3787	1168	3409	1040	3030	912	2651	784	2272	655	1894	527	1515	399	1136	271	1072	249	1072	249
1	3814	1186	3433	1056	3051	926	2670	795	2288	665	1907	535	1526	405	1144	275	1079	253	1079	253
2	3841	1204	3457	1071	3072	939	2688	807	2304	675	1920	543	1536	411	1152	279	1087	257	1087	257
3	3903	1220	3513	1086	3123	952	2732	818	2342	684	1952	551	1561	417	1171	283	1105	260	1105	260
4	3966	1236	3570	1100	3173	965	2776	829	2380	693	1983	558	1587	422	1190	287	1123	264	1123	264
5	4029	1252	3626	1115	3223	977	2821	840	2418	703	2015	565	1612	428	1209	290	1140	267	1140	267
6	5163	1339	4647	1192	4131	1045	3614	898	3098	751	2582	604	2065	457	1549	310	1461	286	1461	286
7	**5300**	**1360**	**4770**	**1211**	**4240**	**1062**	**3710**	**912**	**3180**	**763**	**2650**	**614**	**2120**	**465**	**1590**	**315**	**1500**	**290**	**1500**	**290**
8	5437	1381	4893	1230	4349	1078	3806	926	3262	775	2718	623	2175	472	1631	320	1539	294	1539	294
9	5574	1402	5016	1248	4459	1094	3901	941	3344	787	2787	633	2229	479	1672	325	1577	299	1577	299
10	5710	1423	5139	1267	4568	1111	3997	955	3426	798	2855	642	2284	486	1713	330	1616	303	1616	303
11	5847	1444	5262	1286	4678	1127	4093	969	3508	810	2924	652	2339	493	1754	335	1655	308	1655	308
12	5984	1465	5385	1304	4787	1144	4189	983	3590	822	2992	661	2394	501	1795	340	1694	312	1694	312
13	6121	1486	5509	1323	4897	1160	4284	997	3672	834	3060	671	2448	508	1836	345	1732	317	1732	317
14	6257	1507	5632	1342	5006	1177	4380	1011	3754	846	3129	680	2503	515	1877	350	1771	321	1771	321
15	6394	1528	5755	1361	5115	1193	4476	1025	3837	858	3197	690	2558	522	1918	354	1810	326	1810	326
16	6531	1550	5878	1379	5225	1209	4572	1039	3919	869	3265	699	2612	529	1959	359	1848	330	1848	330
17	6668	1571	6001	1398	5334	1226	4667	1054	4001	881	3334	709	2667	537	2000	364	1887	335	1887	335
18	6805	1592	6124	1417	5444	1242	4763	1068	4083	893	3402	718	2722	544	2041	369	1926	339	1926	339
19	6941	1613	6247	1436	5553	1259	4859	1082	4165	905	3471	728	2777	551	2082	374	1965	344	1965	344
20	7078	1634	6370	1454	5662	1275	4955	1096	4247	917	3539	737	2831	558	2123	379	2003	348	2003	348
21	7215	1655	6493	1473	5772	1292	5050	1110	4329	928	3607	747	2886	565	2164	384	2042	353	2042	353
22	7352	1676	6616	1492	5881	1308	5146	1124	4411	940	3676	756	2941	572	2205	389	2081	357	2081	357
23	7488	1697	6740	1511	5991	1325	5242	1138	4493	952	3744	766	2995	580	2247	393	2119	362	2119	362
24	7625	1718	6863	1529	6100	1341	5338	1152	4575	964	3813	775	3050	587	2288	398	2158	366	2158	366

Combination

Indoor unit : RAV-HM801CTP-E/TR

Outdoor unit : RAV-GM801ATP-E/TR, RAV-GM801ATJP-E

	Cooling		Heating	
	Capacity Q (W)	Power consumption W (W)	Capacity Q (W)	Power consumption W (W)
MINIMUM	1500	290	1500	290
RATING	6900	2380	7700	2130

Q: Capacity in W
W: Power Consumption in W

Cooling

Outdoor temperature (°C)		Load (%)									
		100	90	80	70	60	50	40	30	20	10
40	Q	6510	5860	5210	4560	3910	3250	2610	1960	1420	1420
	W	2600	2130	1680	1280	960	720	560	430	340	340
35	Q	6900	6210	5520	4830	4140	3450	2760	2070	1500	1500
	W	2380	1950	1540	1170	880	660	510	390	290	290
30	Q	7290	6560	5840	5100	4380	3640	2920	2190	1590	1590
	W	2170	1780	1400	1070	800	600	470	360	280	280
25	Q	7580	6820	6070	5310	4550	3790	3030	2280	1650	1650
	W	1970	1610	1270	970	720	550	420	320	260	260
20	Q	7690	6920	6160	5380	4620	3840	3080	2310	1670	1670
	W	1760	1450	1140	870	650	490	380	290	230	230

Heating

Outdoor temperature (°C)		Load (%)									
		100	90	80	70	60	50	40	30	20	10
15	Q	9100	8190	7280	6370	5460	4560	3640	2730	1820	1780
	W	2320	1940	1590	1280	1000	770	600	460	330	320
10	Q	8260	7440	6610	5780	4960	4130	3310	2470	1650	1610
	W	2210	1860	1520	1220	950	740	570	440	310	300
7	Q	7700	6930	6160	5390	4620	3850	3080	2310	1540	1500
	W	2130	1790	1460	1170	920	710	550	420	300	290
5	Q	5930	5340	4750	4150	3560	2970	2370	1780	1180	1160
	W	1830	1530	1260	1010	790	610	470	360	260	250
2	Q	5800	5220	4640	4060	3480	2900	2320	1740	1160	1130
	W	1800	1510	1240	990	780	600	470	360	250	240
0	Q	5710	5140	4570	4000	3430	2860	2290	1710	1140	1110
	W	1790	1500	1230	980	770	600	460	350	250	240
-5	Q	5510	4960	4410	3860	3310	2760	2200	1650	1100	1070
	W	1740	1460	1200	960	750	580	450	340	250	240
-7	Q	5420	4880	4340	3800	3250	2710	2170	1620	1080	1060
	W	1730	1450	1190	950	740	580	450	340	240	230
-10	Q	5010	4510	4010	3500	3000	2510	2000	1500	1000	980
	W	1660	1390	1140	920	720	550	430	330	230	220
-15	Q	3850	3470	3080	2700	2310	1930	1540	1150	770	750
	W	1490	1240	1020	820	640	500	380	290	210	200

Combination

Indoor unit : RAV-HM1101CTP-E/TR

Outdoor unit : RAV-GM1101ATP-E/TR, RAV-GM1101ATJP-E

	Cooling		Heating	
	Capacity(W)	Power consumption (W)	Capacity(W)	Power consumption (W)
MINIMUM	3000	600	3000	600
RATING	9500	2950	11200	2940

Q: Capacity in W
W: Power Consumption in W

Cooling

Outdoor temperature(ºC)		Load(%)									
		100	**90**	**80**	**70**	**60**	**50**	**40**	**30**	**20**	**10**
40	Q	9000	8100	7200	6300	5400	4500	3600	2840	2840	2840
	W	3200	2550	2070	1670	1340	1040	810	650	650	650
35	Q	9500	8550	7600	6650	5700	4750	3800	3000	3000	3000
	W	2950	2350	1910	1540	1230	960	750	600	600	600
30	Q	9960	8960	7960	6970	5970	4980	3980	3140	3140	3140
	W	2680	2130	1730	1400	1120	870	680	540	540	540
25	Q	10340	9300	8270	7240	6200	5170	4130	3260	3260	3260
	W	2430	1940	1570	1270	1010	790	620	490	490	490
20	Q	10610	9550	8490	7430	6370	5310	4240	3350	3350	3350
	W	2200	1750	1420	1150	920	720	560	450	450	450

Heating

Outdoor temperature(ºC)		Load(%)									
		100	**90**	**80**	**70**	**60**	**50**	**40**	**30**	**20**	**10**
15	Q	13410	12060	10730	9390	8050	6700	5360	4010	3600	3600
	W	3230	2770	2330	1900	1520	1200	940	720	660	660
10	Q	12190	10950	9750	8530	7310	6090	4870	3640	3270	3270
	W	3070	2640	2220	1810	1440	1140	900	690	630	630
7	Q	11200	10080	8960	7840	6720	5600	4480	3360	3000	3000
	W	2940	2530	2120	1730	1380	1090	860	660	600	600
5	Q	8630	7760	6900	6040	5180	4310	3450	2580	2310	2310
	W	2520	2170	1820	1490	1190	940	740	570	520	520
2	Q	8440	7580	6750	5900	5060	4210	3370	2520	2260	2260
	W	2490	2140	1800	1470	1170	920	730	560	510	510
0	Q	8310	7470	6650	5820	4990	4150	3320	2490	2230	2230
	W	2460	2120	1780	1450	1160	910	720	550	500	500
-5	Q	8010	7200	6410	5610	4810	4000	3200	2400	2150	2150
	W	2410	2070	1740	1420	1130	890	700	540	490	490
-7	Q	7890	7090	6310	5520	4730	3940	3150	2360	2120	2120
	W	2380	2050	1720	1400	1120	880	700	540	490	490
-10	Q	7280	6550	5830	5100	4370	3640	2910	2180	1950	1950
	W	2290	1970	1660	1350	1080	850	670	520	470	470
-15	Q	5600	5040	4480	3920	3360	2800	2240	1680	1500	1500
	W	2050	1760	1480	1210	960	760	600	460	420	420

Combination

Indoor unit : **RAV-HM1401CTP-E/TR**

Outdoor unit : **RAV-GM1401ATP-E/TR, RAV-GM1401ATJP-E**

	Cooling		Heating	
	Capacity(W)	Power consumption (W)	Capacity(W)	Power consumption (W)
MINIMUM	3000	600	3000	600
RATING	12100	4420	13000	3480

Q: Capacity in W
W: Power Consumption in W

Cooling

Outdoor temperature(ºC)		Load(%)									
		100	**90**	**80**	**70**	**60**	**50**	**40**	**30**	**20**	**10**
40	Q	11460	10310	9170	8030	6880	5730	4590	3440	2840	2840
	W	4810	3880	3050	2340	1770	1340	1020	760	650	650
35	Q	12100	10890	9680	8470	7260	6050	4840	3630	3000	3000
	W	4420	3570	2800	2150	1630	1230	940	700	600	600
30	Q	12680	11410	10140	8880	7610	6340	5080	3810	3140	3140
	W	4010	3240	2540	1950	1480	1120	850	640	540	540
25	Q	13160	11840	10530	9220	7900	6580	5270	3960	3260	3260
	W	3650	2950	2310	1780	1350	1020	780	580	500	500
20	Q	13520	12160	10810	9470	8120	6760	5410	4060	3350	3350
	W	3290	2660	2090	1600	1210	920	700	520	450	450

Heating

Outdoor temperature(ºC)		Load(%)									
		100	**90**	**80**	**70**	**60**	**50**	**40**	**30**	**20**	**10**
15	Q	15570	14010	12460	10900	9340	7780	6230	4670	3590	3590
	W	3820	3210	2680	2210	1780	1400	1080	820	660	660
10	Q	14150	12730	11320	9900	8490	7070	5660	4240	3260	3260
	W	3630	3060	2550	2100	1690	1340	1020	780	630	630
7	Q	13000	11700	10400	9100	7800	6500	5200	3900	3000	3000
	W	3480	2930	2440	2010	1620	1280	980	750	600	600
5	Q	10010	9010	8010	7010	6010	5010	4010	3000	2310	2310
	W	2990	2520	2100	1730	1390	1100	840	640	520	520
2	Q	9790	8810	7830	6850	5870	4900	3920	2940	2260	2260
	W	2950	2480	2070	1700	1370	1080	830	640	510	510
0	Q	9650	8680	7720	6750	5790	4820	3860	2890	2230	2230
	W	2920	2460	2050	1680	1360	1070	820	630	500	500
-5	Q	9300	8370	7440	6510	5580	4650	3720	2790	2150	2150
	W	2850	2400	2000	1640	1320	1050	800	610	490	490
-7	Q	9160	8240	7330	6410	5500	4580	3660	2750	2110	2110
	W	2810	2370	1970	1630	1310	1040	790	610	490	490
-10	Q	8460	7610	6770	5920	5080	4230	3380	2540	1950	1950
	W	2710	2280	1900	1570	1260	1000	760	580	470	470
-15	Q	6500	5850	5200	4550	3900	3250	2600	1950	1500	1500
	W	2430	2040	1700	1400	1130	890	680	520	420	420

Combination

Indoor unit : RAV-HM561CTP-E/TR x 2 (Twin system)

Outdoor unit : RAV-GM1101ATP-E/TR, RAV-GM1101ATJP-E

	Cooling		Heating	
	Capacity(W)	Power consumption (W)	Capacity(W)	Power consumption (W)
MINIMUM	3000	600	3000	600
RATING	9500	2950	11200	2940

Q: Capacity in W
W: Power Consumption in W

Cooling

Outdoor temperature(ºC)		Load(%)									
		100	**90**	**80**	**70**	**60**	**50**	**40**	**30**	**20**	**10**
40	Q	9000	8100	7200	6300	5400	4500	3600	2840	2840	2840
	W	3200	2550	2070	1670	1340	1040	810	650	650	650
35	Q	9500	8550	7600	6650	5700	4750	3800	3000	3000	3000
	W	2950	2350	1910	1540	1230	960	750	600	600	600
30	Q	9960	8960	7960	6970	5970	4980	3980	3140	3140	3140
	W	2680	2130	1730	1400	1120	870	680	540	540	540
25	Q	10340	9300	8270	7240	6200	5170	4130	3260	3260	3260
	W	2430	1940	1570	1270	1010	790	620	490	490	490
20	Q	10610	9550	8490	7430	6370	5310	4240	3350	3350	3350
	W	2200	1750	1420	1150	920	720	560	450	450	450

Heating

Outdoor temperature(ºC)		Load(%)									
		100	**90**	**80**	**70**	**60**	**50**	**40**	**30**	**20**	**10**
15	Q	13410	12060	10730	9390	8050	6700	5360	4010	3600	3600
	W	3230	2770	2330	1900	1520	1200	940	720	660	660
10	Q	12190	10950	9750	8530	7310	6090	4870	3640	3270	3270
	W	3070	2640	2220	1810	1440	1140	900	690	630	630
7	Q	11200	10080	8960	7840	6720	5600	4480	3360	3000	3000
	W	2940	2530	2120	1730	1380	1090	860	660	600	600
5	Q	8630	7760	6900	6040	5180	4310	3450	2580	2310	2310
	W	2520	2170	1820	1490	1190	940	740	570	520	520
2	Q	8440	7580	6750	5900	5060	4210	3370	2520	2260	2260
	W	2490	2140	1800	1470	1170	920	730	560	510	510
0	Q	8310	7470	6650	5820	4990	4150	3320	2490	2230	2230
	W	2460	2120	1780	1450	1160	910	720	550	500	500
-5	Q	8010	7200	6410	5610	4810	4000	3200	2400	2150	2150
	W	2410	2070	1740	1420	1130	890	700	540	490	490
-7	Q	7890	7090	6310	5520	4730	3940	3150	2360	2120	2120
	W	2380	2050	1720	1400	1120	880	700	540	490	490
-10	Q	7280	6550	5830	5100	4370	3640	2910	2180	1950	1950
	W	2290	1970	1660	1350	1080	850	670	520	470	470
-15	Q	5600	5040	4480	3920	3360	2800	2240	1680	1500	1500
	W	2050	1760	1480	1210	960	760	600	460	420	420

Combination

Indoor unit : RAV-HM801CTP-E/TR x 2 (Twin system)

Outdoor unit : RAV-GM1401ATP-E/TR, RAV-GM1401ATJP-E

	Cooling		Heating	
	Capacity(W)	Power consumption (W)	Capacity(W)	Power consumption (W)
MINIMUM	3000	600	3000	600
RATING	12100	4420	13000	3480

Q: Capacity in W
W: Power Consumption in W

Cooling

Outdoor temperature(ºC)		Load(%)									
		100	**90**	**80**	**70**	**60**	**50**	**40**	**30**	**20**	**10**
40	Q	11460	10310	9170	8030	6880	5730	4590	3440	2840	2840
	W	4810	3880	3050	2340	1770	1340	1020	760	650	650
35	Q	12100	10890	9680	8470	7260	6050	4840	3630	3000	3000
	W	4420	3570	2800	2150	1630	1230	940	700	600	600
30	Q	12680	11410	10140	8880	7610	6340	5080	3810	3140	3140
	W	4010	3240	2540	1950	1480	1120	850	640	540	540
25	Q	13160	11840	10530	9220	7900	6580	5270	3960	3260	3260
	W	3650	2950	2310	1780	1350	1020	780	580	500	500
20	Q	13520	12160	10810	9470	8120	6760	5410	4060	3350	3350
	W	3290	2660	2090	1600	1210	920	700	520	450	450

Heating

Outdoor temperature(ºC)		Load(%)									
		100	**90**	**80**	**70**	**60**	**50**	**40**	**30**	**20**	**10**
15	Q	15570	14010	12460	10900	9340	7780	6230	4670	3590	3590
	W	3820	3210	2680	2210	1780	1400	1080	820	660	660
10	Q	14150	12730	11320	9900	8490	7070	5660	4240	3260	3260
	W	3630	3060	2550	2100	1690	1340	1020	780	630	630
7	Q	13000	11700	10400	9100	7800	6500	5200	3900	3000	3000
	W	3480	2930	2440	2010	1620	1280	980	750	600	600
5	Q	10010	9010	8010	7010	6010	5010	4010	3000	2310	2310
	W	2990	2520	2100	1730	1390	1100	840	640	520	520
2	Q	9790	8810	7830	6850	5870	4900	3920	2940	2260	2260
	W	2950	2480	2070	1700	1370	1080	830	640	510	510
0	Q	9650	8680	7720	6750	5790	4820	3860	2890	2230	2230
	W	2920	2460	2050	1680	1360	1070	820	630	500	500
-5	Q	9300	8370	7440	6510	5580	4650	3720	2790	2150	2150
	W	2850	2400	2000	1640	1320	1050	800	610	490	490
-7	Q	9160	8240	7330	6410	5500	4580	3660	2750	2110	2110
	W	2810	2370	1970	1630	1310	1040	790	610	490	490
-10	Q	8460	7610	6770	5920	5080	4230	3380	2540	1950	1950
	W	2710	2280	1900	1570	1260	1000	760	580	470	470
-15	Q	6500	5850	5200	4550	3900	3250	2600	1950	1500	1500
	W	2430	2040	1700	1400	1130	890	680	520	420	420

2-5-6. Air Throw Distance Chart

RAV-HM401CTP-E

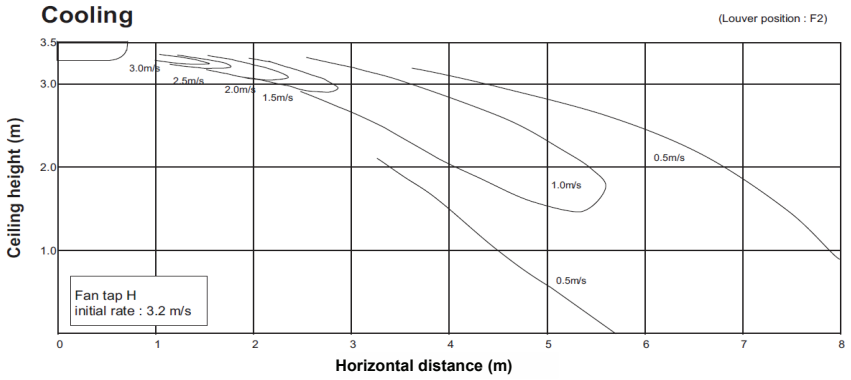

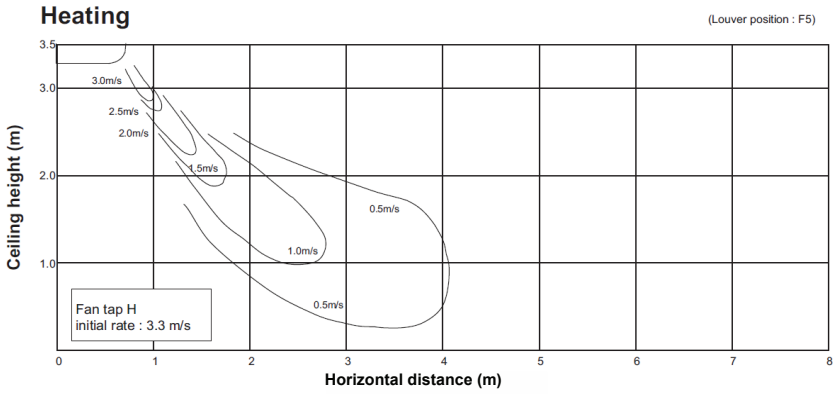

RAV-HM561CTP-E

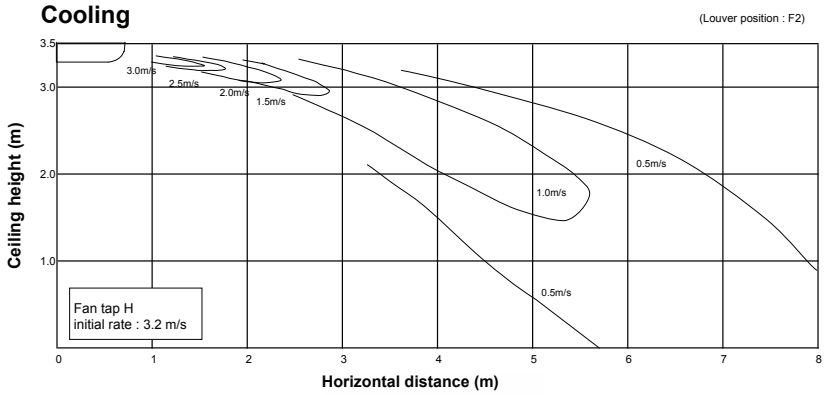

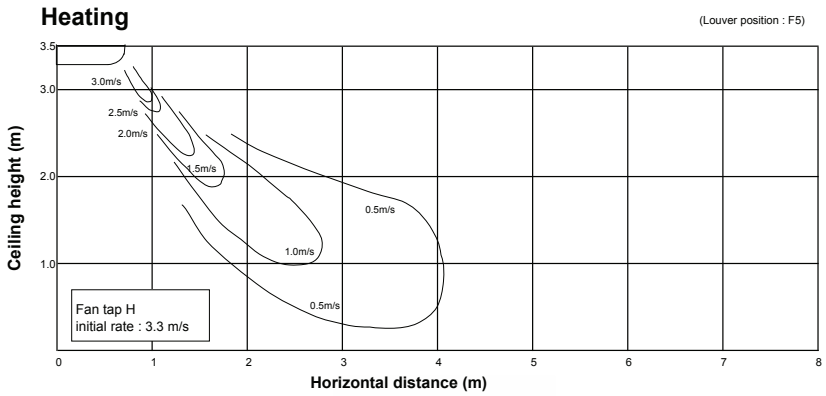

RAV-HM801CTP-E

Cooling

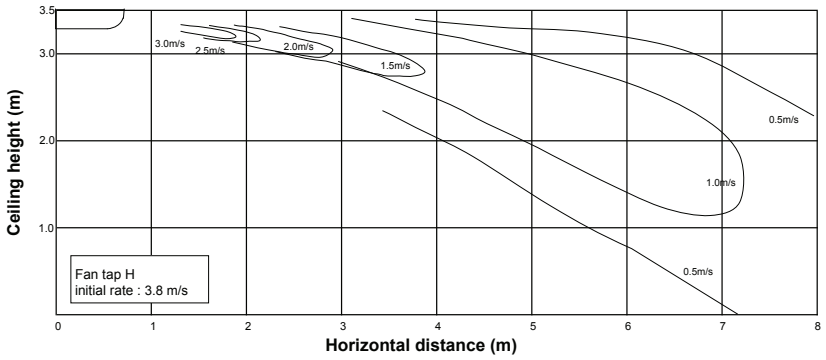

Heating

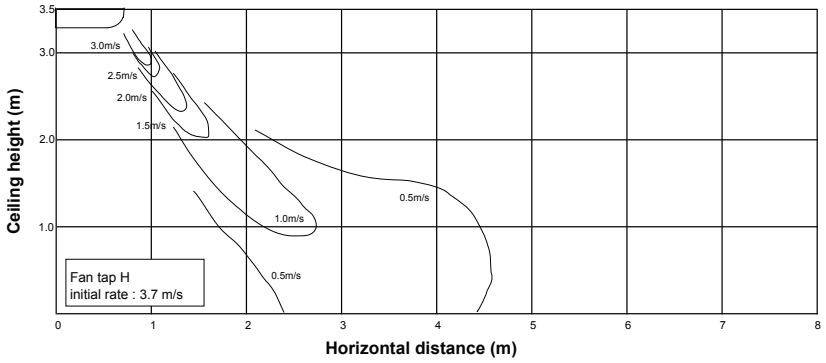

RAV-HM1101CTP-E

Cooling

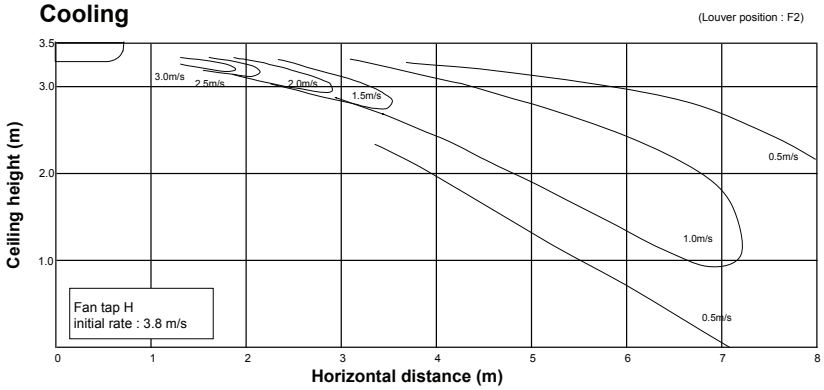

Heating

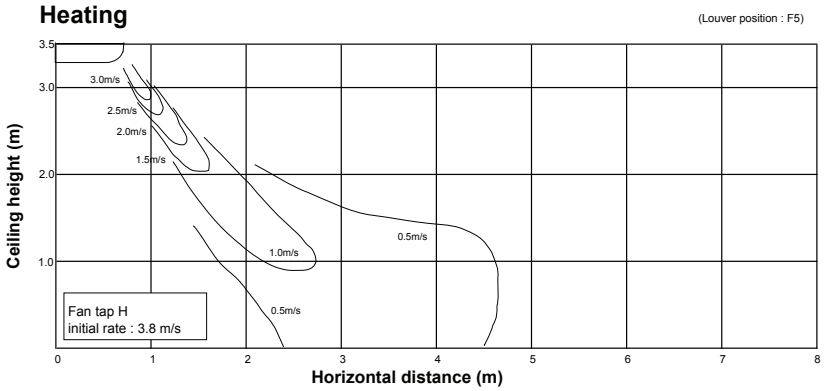

RAV-HM1401CTP-E

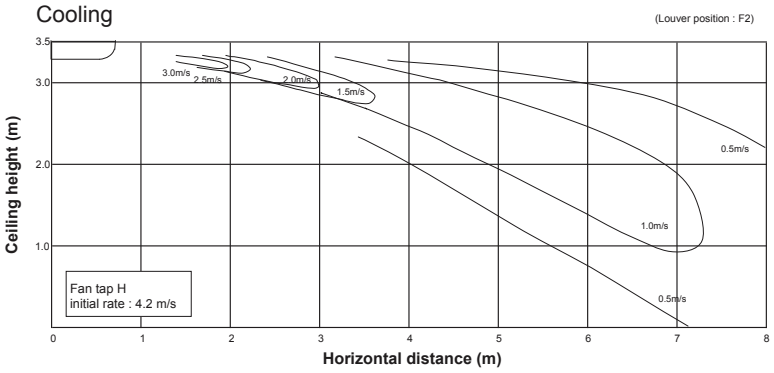

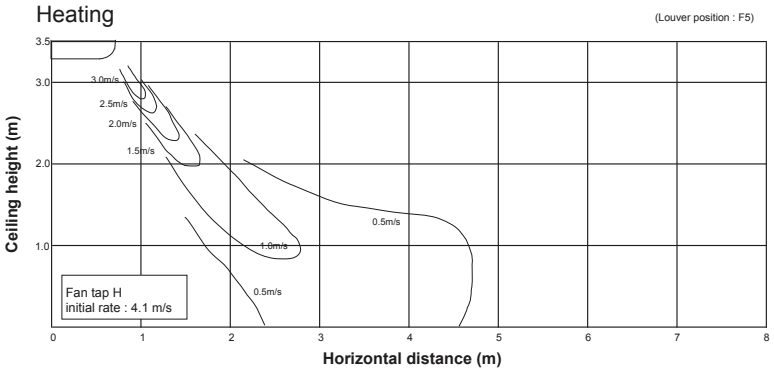

2-5-7. Sound Characteristics (NC curve)

RAV-HM401CTP-E/TR

Fan tap	H	M	L
Sound pressure level (dB(A))	37	35	28

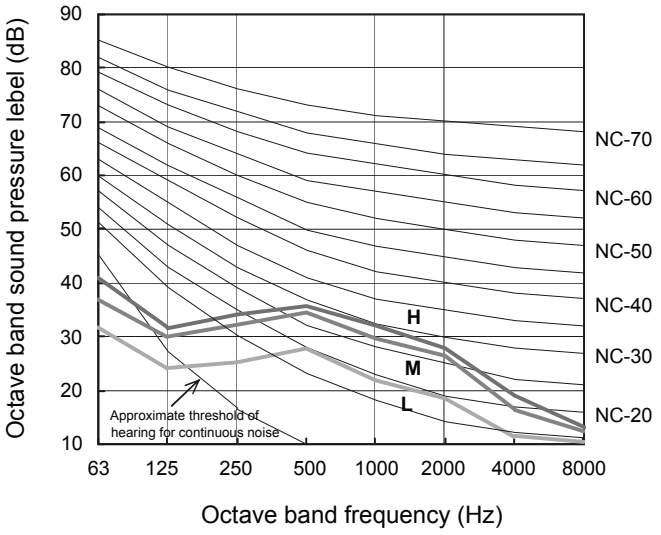

RAV-HM561CTP-E/TR

Fan tap	H	M	L
Sound pressure level (dB(A))	37	35	28

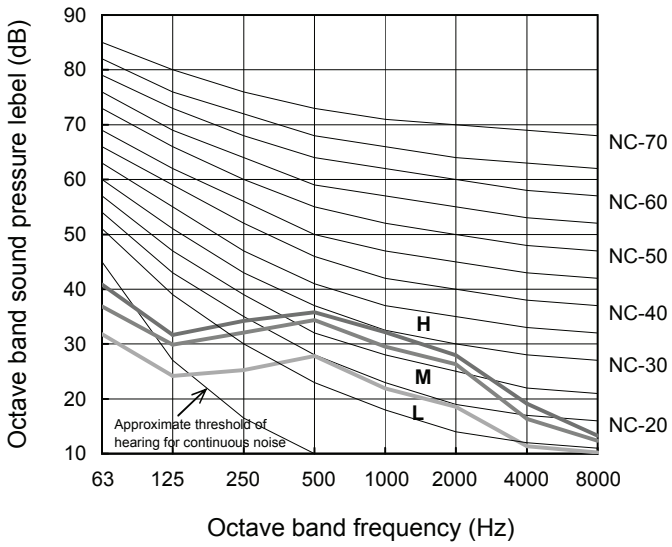

RAV-HM801CTP-E/TR

Fan tap	H	M	L
Sound pressure level (dB(A))	41	36	29

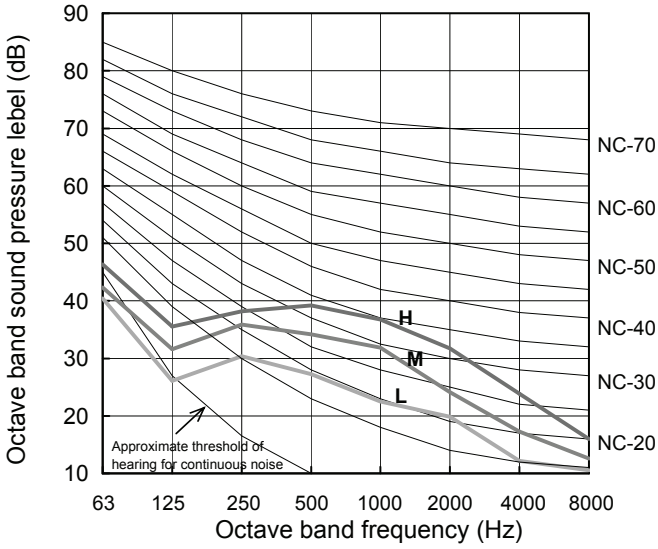

RAV-HM1101CTP-E/TR

Fan tap	H	M	L
Sound pressure level (dB(A))	44	38	32

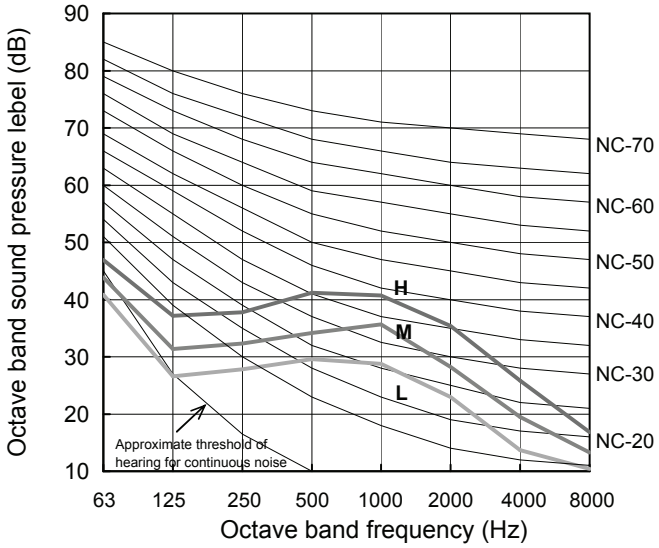

RAV-HM1401CTP-E/TR

Fan tap	H	M	L
Sound pressure level (dB(A))	46	41	35

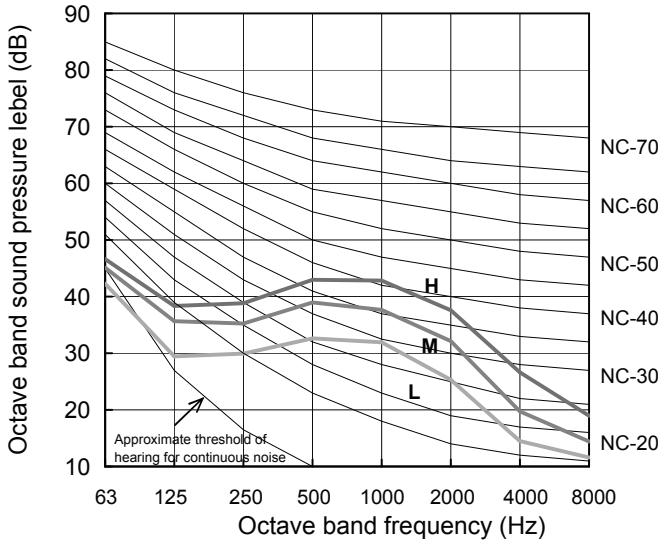

2-5-8. Accessories

Parts name	Model name	Applied Model	Feature	Remark
Wireless Remote Controller kit	RBC-AXU31C-E	All Model	-	
Drain pump kit	TCB-DP31CE	All Model	Antibacterial glass is built into Drain pump kit	
Elbow piping kit	TCB-KP14CPE	All Model	It is necessary for installation of Drain pump kit	Use with TCB-DP31CE
Option connecting kit	TCB-PCUC2E	All Model	For external I/O signal without local relay preparation	
Auxillary fresh air flange	TCB-FF101URE2	All Model		

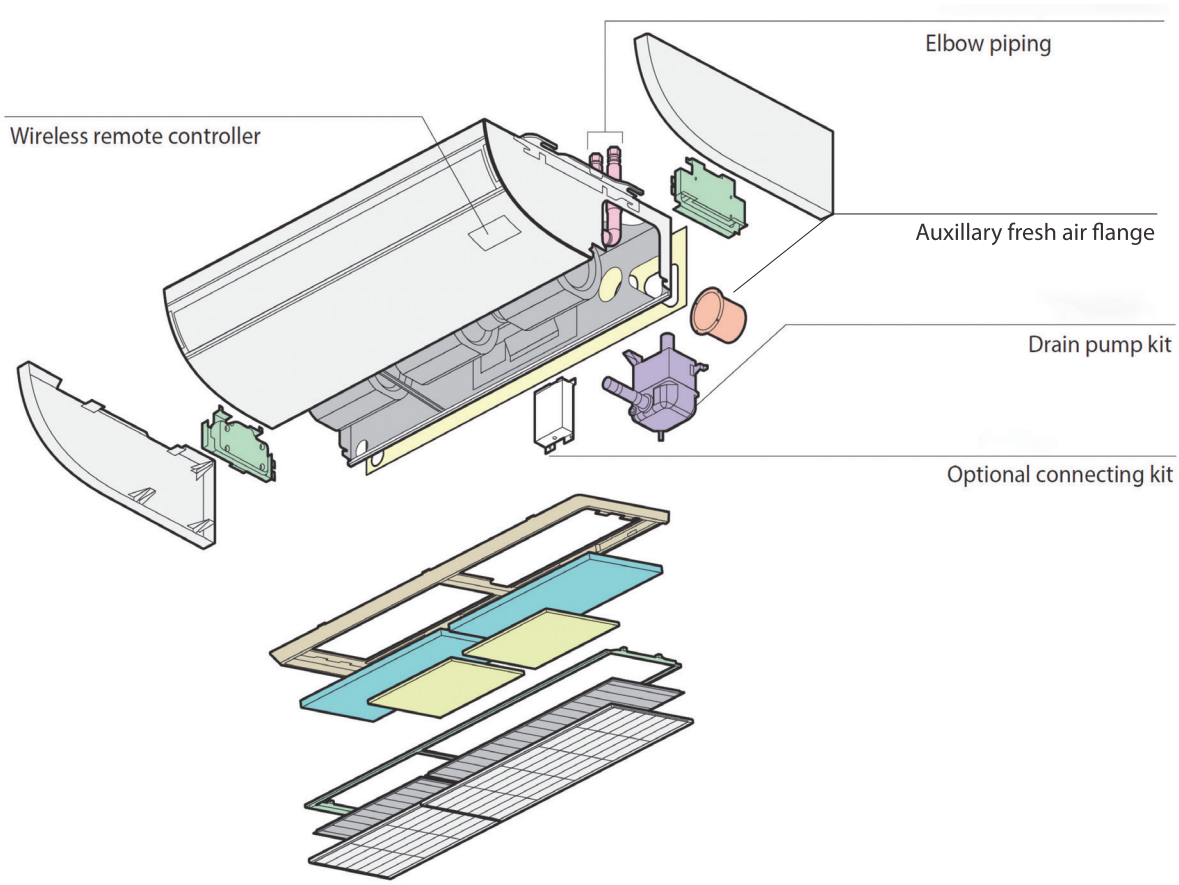

Appendix

Drain pump kit : TCB-DP31CE

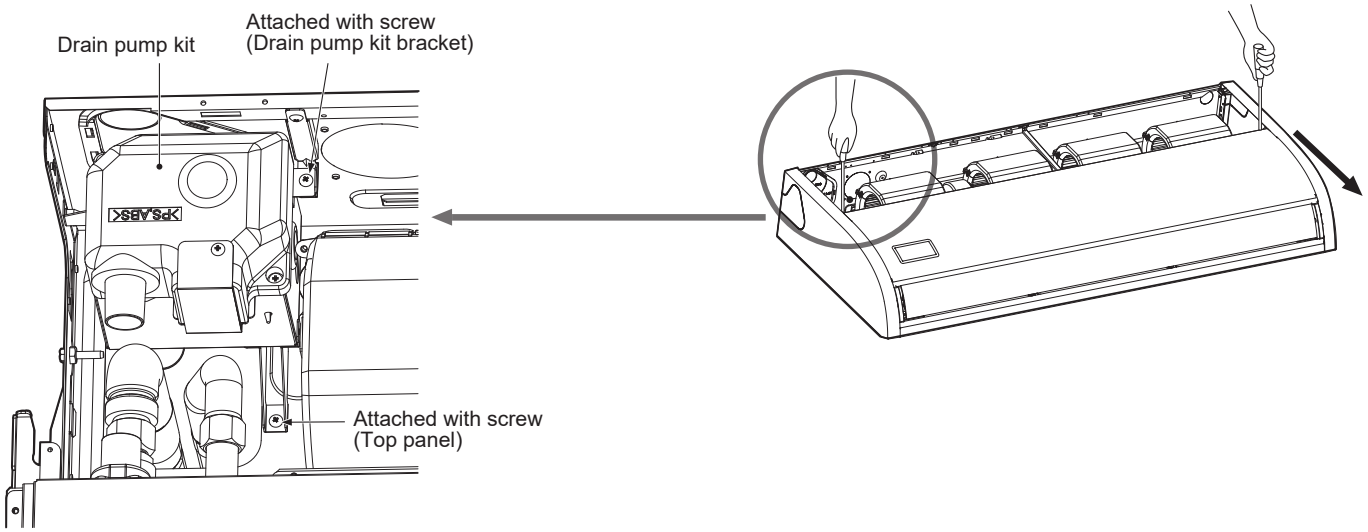

- The elbow piping kit (TCB-KP13CE, KP23CE) (sold separately) is also needed to install the drain pump kit because the pipes must be directed upward.
- Insulate all drain pipes.
- Cut two holes in the ceiling (Ø100) where the installation is being done through which to pass the refrigerant pipe and the drain pipe.
- Install a 450 × 450 access panel in the ceiling where the installation is being done.

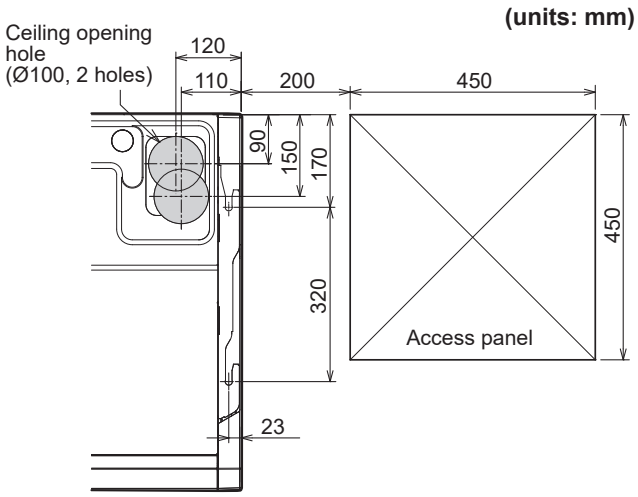

Position of ceiling opening hole

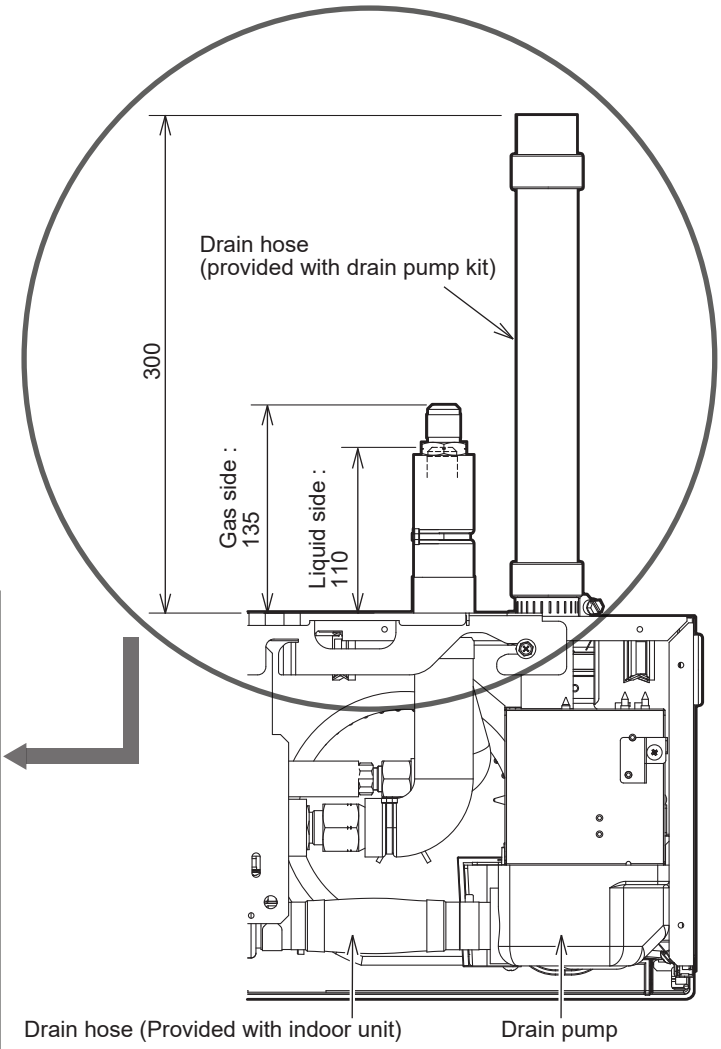

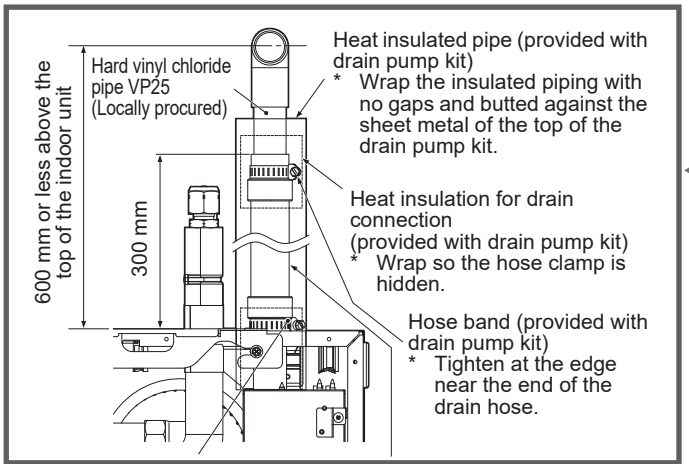

Option Connecting Kit : TCB-PCUC2E

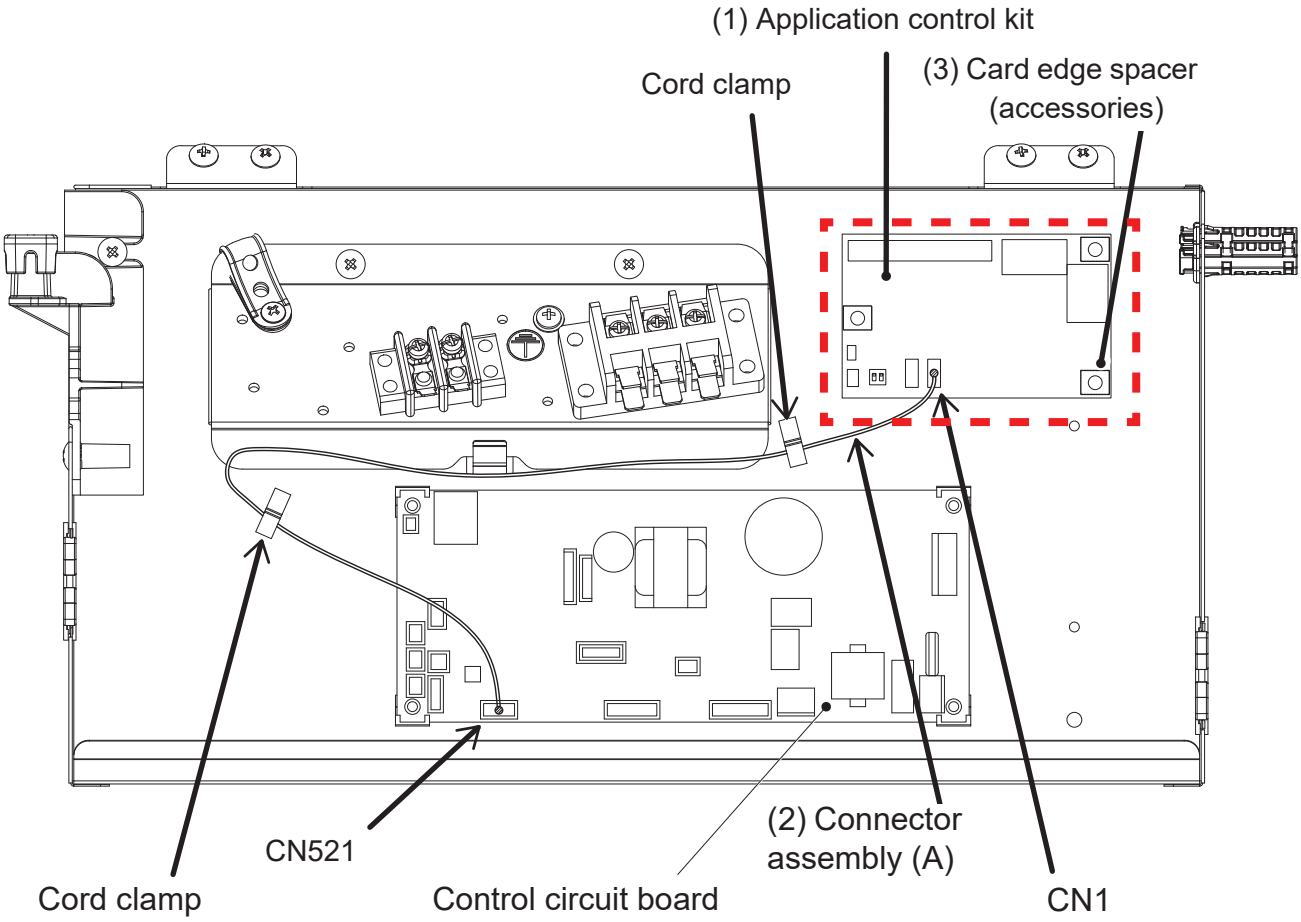

1 Use the (3) card edge spacers (3 pcs) provided with the electrical control box to install the (1) application control kit.

2 Use the (2) connector assembly (A) provided to connect CN1 on the (1) application control kit and CN521 on the indoor control circuit board, then run the wires and fix it in place with two cord clamps.

REQUIREMENT

Remove the clamp filter of (2) Connector assembly (A).

Auxiliary outside air flange : TCB-FF101URE2

Name	Q'ty
Auxiliary fresh air flange 100 mm 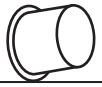	1

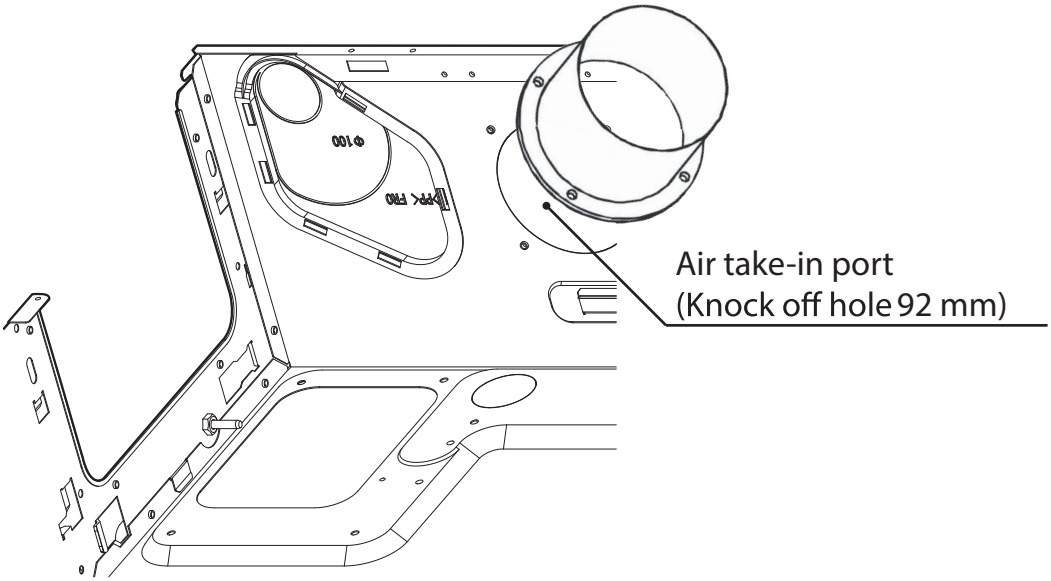

Approximately 5% or less of standard airflow volume will be reduced

2-6. High-wall Type

2-6-1. Specifications

2-6-2. Dimension

2-6-3. Wiring Diagrams

2-6-4. Sensible Capacity Table

2-6-5. Part Load Performance

2-6-6. Air Throw Distance Chart

2-6-7. Sound Characteristics (NC Curve)

2-6-1. Specifications

High-wall Type <Single Type>

Model		Indoor unit		RAV- HM301KRTP-E/TR	RAV- HM401KRTP-E/TR	RAV- HM561KRTP-E/TR	RAV- HM801KRTP-E/TR
		Outdoor unit		RAV-GM301ATP-E/TR	RAV-GM401ATP-E/TR	RAV-GM561ATP-E1/TR1	RAV-GM801ATP-E/TR
Cooling capacity			(kW)	2.5 < 0.9-3.0 >	3.6 < 0.9-4.0 >	5.0 < 1.5 - 5.6 >	6.7 < 1.5 - 8.0 >
Heating capacity			(kW)	3.4 < 0.8-4.5 >	4.0 < 0.8-5.0 >	5.3 < 1.5 - 6.3 >	7.7 < 1.5 - 9.0 >
Power supply				1 phase 220V-240V/50Hz, 1phase 220V/60Hz			
Electrical characteristics	Cooling	Running current	(A)	3.07-2.83	5.60-5.10	7.78-7.13	11.43-10.48
		Power consumption	(kW)	0.61	1.13	1.66	2.44
		Power factor	(%)	90	92	97	97
		EER		4.10	3.19	3.01	2.75
		SEER		6.36	6.12	6.19	5.73
	Heating	Running current	(A)	4.17-3.80	5.50-5.00	7.26-6.66	12.23-11.21
		Power consumption	(kW)	0.85	1.12	1.55	2.61
		Power factor	(%)	93	93	97	97
		COP		4.00	3.57	3.42	2.95
		SCOP		4.10	4.22	4.00	4.01
	Maximum current		(A)	7.9	9.2	15.5	15.5
Indoor unit							
Outer dimension	Main unit	Height	(mm)	293	293	320	320
		Width	(mm)	798	798	1050	1050
		Depth	(mm)	230	230	250	250
Total weight	Main unit		(kg)	10.0	10.0	14.0	14.0
Fan unit	Fan			Cross flow fan			
	Standard air flow	H/M/L	(m3/h)	670/540/450	700/580/450	960/830/680	1040/910/680
	Motor		(W)	30	30	30	30
Controller (Packed with unit)				WH-TA09NE			
Air filter				Standard filter (Long life filter)			
Sound pressure level		H/M+/M/L+/L	(dB)	40/37/34/31/29	41/38/36/33/30	42/41/39/36/35	45/43/41/36/35
Sound power level		H/M/L	(dB)	55 / 49 / 44	55 / 51 / 45	57 / 54 / 51	60 / 56 / 51

*1 : The cooling capacities and electrical characteristics are measured under the conditions specified by JIS B 8615 based on the reference piping. The reference piping consists of 5 m of main piping and 2.5 m of branch piping connected with 0 meter height.

*2 : The sound level are measured in an anechoic chamber in accordance with JIS B 8616. Normally, the values measured in the actual operating environment become larger than the indicated values due to the effects of external sound.

Note :

Rated conditions Cooling : Indoor air temperature 27°C DB/19°C WB, Outdoor air temperature 35°C DB
Heating : Indoor air temperature 20°C DB, Outdoor air temperature 7°C DB/6°C WB

Model		Indoor unit		RAV-HM1101KRTP-E / TR	RAV-HM1101KRTP-E / TR
		Outdoor unit		RAV-GM1101ATP-E / TR	RAV-GM1101AT8P-E / TR
Cooling capacity			(kW)	9.5 < 3.0 - 11.2 >	9.5 < 3.0 - 11.2 >
Heating capacity			(kW)	11.2 < 3.0 - 13.0 >	11.2 < 3.0 - 13.0 >
Power supply				1 phase 220V-240V/50Hz, 1phase 220V/60Hz	3 phase 380V-415V/50Hz, 3phase 380V/60Hz
Electrical characteristics	Cooling	Running current	(A)	14.35 - 13.15	4.80 - 4.40
		Power consumption	(kW)	2.97	2.97
		Power factor	(%)	94	94
		EER		3.20	3.20
		PdisignC		9.50	9.50
		SEER		6.10	6.10
	Heating	Running current	(A)	16.80 - 15.40	5.60 - 5.15
		Power consumption	(kW)	3.47	3.47
		Power factor	(%)	94	94
		COP		3.23	3.23
		PdisignH (Tbiv -7°C)		8.00	8.00
		SCOP		4.20	4.20
		Maximum current	(A)	22.8	14.1
Indoor unit					
Outer dimension	Main unit	Height	(mm)	350	
		Width	(mm)	1200	
		Depth	(mm)	280	
Total weight	Main unit		(kg)	19.0	
Fan unit	Fan			Cross flow fan	
	Standard air flow	H/M/L	(m3/h)	1610 / 1350 / 1180	
	Motor		(W)	61.0	
Controller (Packed with unit)				WH-TA09NE	
Air filter				Standard filter (Long life filter)	
Sound pressure level		H/M+/M/L+/L	(dB)	49 / 48 / 45 /43 /41	
Sound power level		H/M/L	(dB)	64 / 60 / 56	

Note :
Rated conditions Cooling : Indoor air temperature 27°C DB/19°C WB, Outdoor air temperature 35°C DB
Heating : Indoor air temperature 20°C DB, Outdoor air temperature 7°C DB/6°C WB

High wall (Cooling only)

Model		Indoor unit		RAV-HM561KRSP-E / TR	RAV-HM801KRSP-E / TR
		Outdoor unit		RAV-GM561ATP-E / TR	RAV-GM801ATP-E / TR
Cooling capacity			(kW)	5.00 < 1.30 - 5.60 >	6.7 < 1.50 - 8.00 >
Power supply				1 phase 220V-240V/50Hz, 1phase 220V/60Hz	1 phase 220V-240V/50Hz, 1phase 220V/60Hz
Electrical characteristics	Cooling	Running current	(A)	7.57 - 6.94	10.54 - 9.66
		Power consumption	(kW)	1.62	2.25
		Power factor	(%)	97	97
		EER		3.10	2.98
		PdisignC		5.00	6.70
		SEER		6.50	6.20
		Maximum current	(A)	14.8	15.5
Indoor unit					
Outer dimension		Main unit	Height (mm)	320	348
			Width (mm)	1050	1200
			Depth (mm)	250	280
Total weight		Main unit	(kg)	14.0	19.0
Fan unit		Fan		Cross flow fan	
		Standard air flow	H/M/L (m^3/h)	1040/ 830/ 680	1610 / 1350 / 1180
		Motor	(W)	42.0	59.0
Controller (Packed with unit)				WC-TE02NE	
Air filter				Standard filter (Long life filter)	
Sound pressure level			H/M+/M/L+/L (dB)	45 / 41 / 39 / 36 / 35	49 / 48 / 45 / 43 /41
Sound power level			H/M/L (dB)	60 / 54 / 50	64 / 60 / 56

Note :
Rated conditions Cooling : Indoor air temperature 27°C DB/19°C WB, Outdoor air temperature 35°C DB
Heating : Indoor air temperature 20°C DB, Outdoor air temperature 7°C DB/6°C WB

High wall (Twin System)

Model		Indoor unit 1		RAV-HM561KRTP-E/TR	RAV-HM801KRTP-E/TR
		Indoor unit 2		RAV-HM561KRTP-E/TR	RAV-HM801KRTP-E/TR
		Outdoor unit	(RAV-GM***ATJP-E)	RAV-GM1101ATP-E/TR	RAV-GM1401ATP-E/TR
Cooling capacity			(kW)	9.5 < 3.0 - 11.2 >	12.1 < 3.0 - 13.2 >
Heating capacity			(kW)	11.2 < 3.0 - 13.0 >	13.0 < 3.0 - 16.0 >
Power supply				1 phase 220V-240V/50Hz, 1phase 220V/60Hz	
Electrical characteristics	Cooling	Running current	(A)	14.40-13.20	22.80-20.90
		Power consumption	(kW)	2.98	4.71
		Power factor	(%)	94	94
		EER		3.19	2.57
		SEER		5.32	5.24
	Heating	Running current	(A)	14.50-13.25	18.60-17.10
		Power consumption	(kW)	2.99	3.86
		Power factor	(%)	94	94
		COP		3.75	3.37
		SCOP		4.19	4.19
	Maximum current		(A)	22.8	22.8
Indoor unit					
Outer dimension	Main unit	Height	(mm)	320	320
		Width	(mm)	1050	1050
		Depth	(mm)	250	250
Total weight	Main unit		(kg)	14.0	14.0
Fan unit	Fan			Cross flow fan	
	Standard air flow	H/M/L	(m3/h)	960/830/680	1040/910/680
	Motor		(W)	30	
Air filter				Standard filter (Long life filter)	
Sound pressure level		H/M+/M/L+/L	(dB)	42/41/39/36/35	45/43/41/36/35
Sound power level		H/M/L	(dB)	57 / 54 / 51	60 / 56 / 51

*1 : The cooling capacities and electrical characteristics are measured under the conditions specified by JIS B 8615 based on the reference piping. The reference piping consists of 5 m of main piping and 2.5 m of branch piping connected with 0 meter height.

*2 : The sound level are measured in an anechoic chamber in accordance with JIS B 8616. Normally, the values measured in the actual operating environment become larger than the indicated values due to the effects of external sound.

Note :

Rated conditions Cooling : Indoor air temperature 27°C DB/19°C WB, Outdoor air temperature 35°C DB
Heating : Indoor air temperature 20°C DB, Outdoor air temperature 7°C DB/6°C WB

2-6-2. Dimension

RAV-HM301KRTP-E/TR

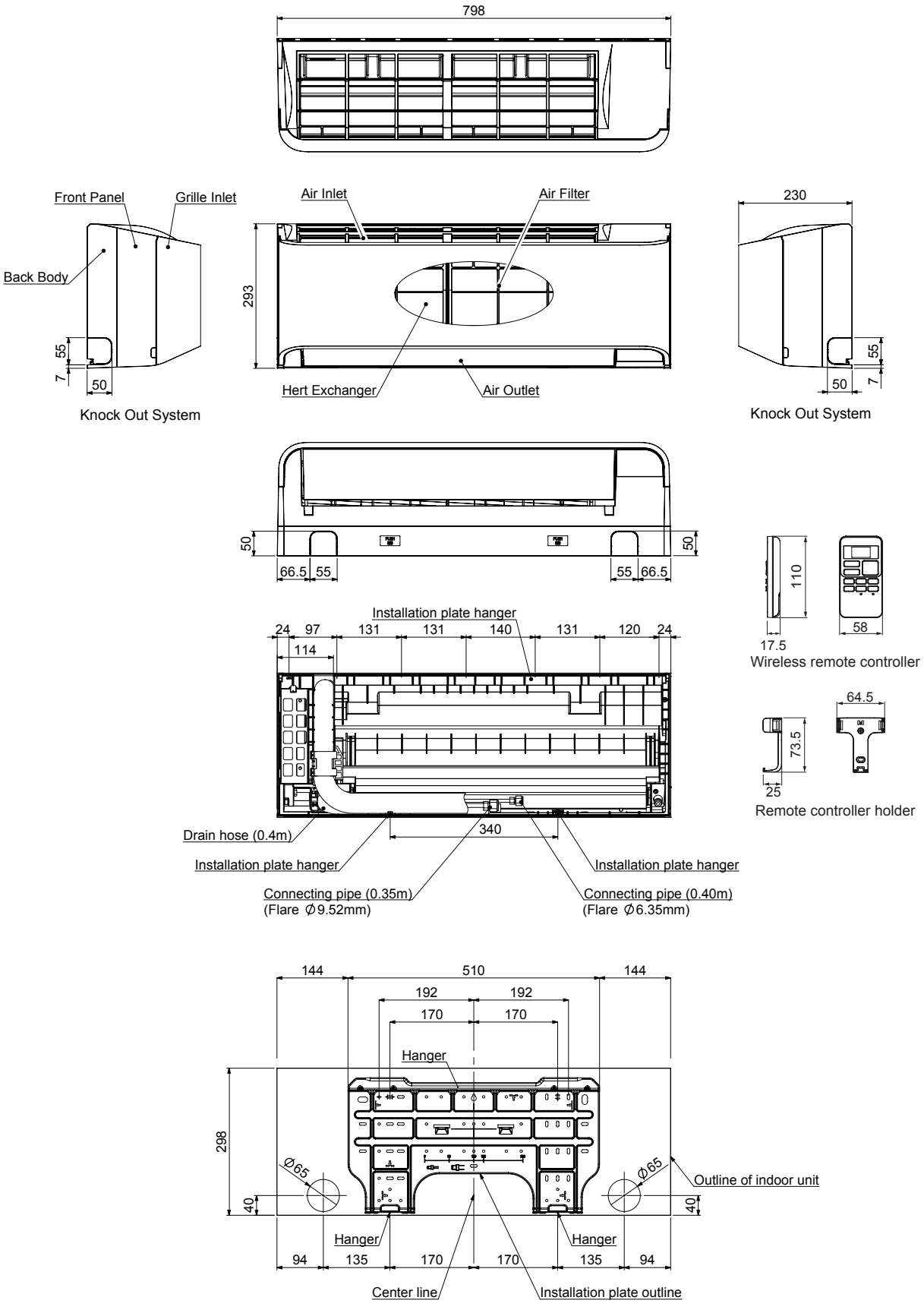

RAV-HM401KRTP-E/TR

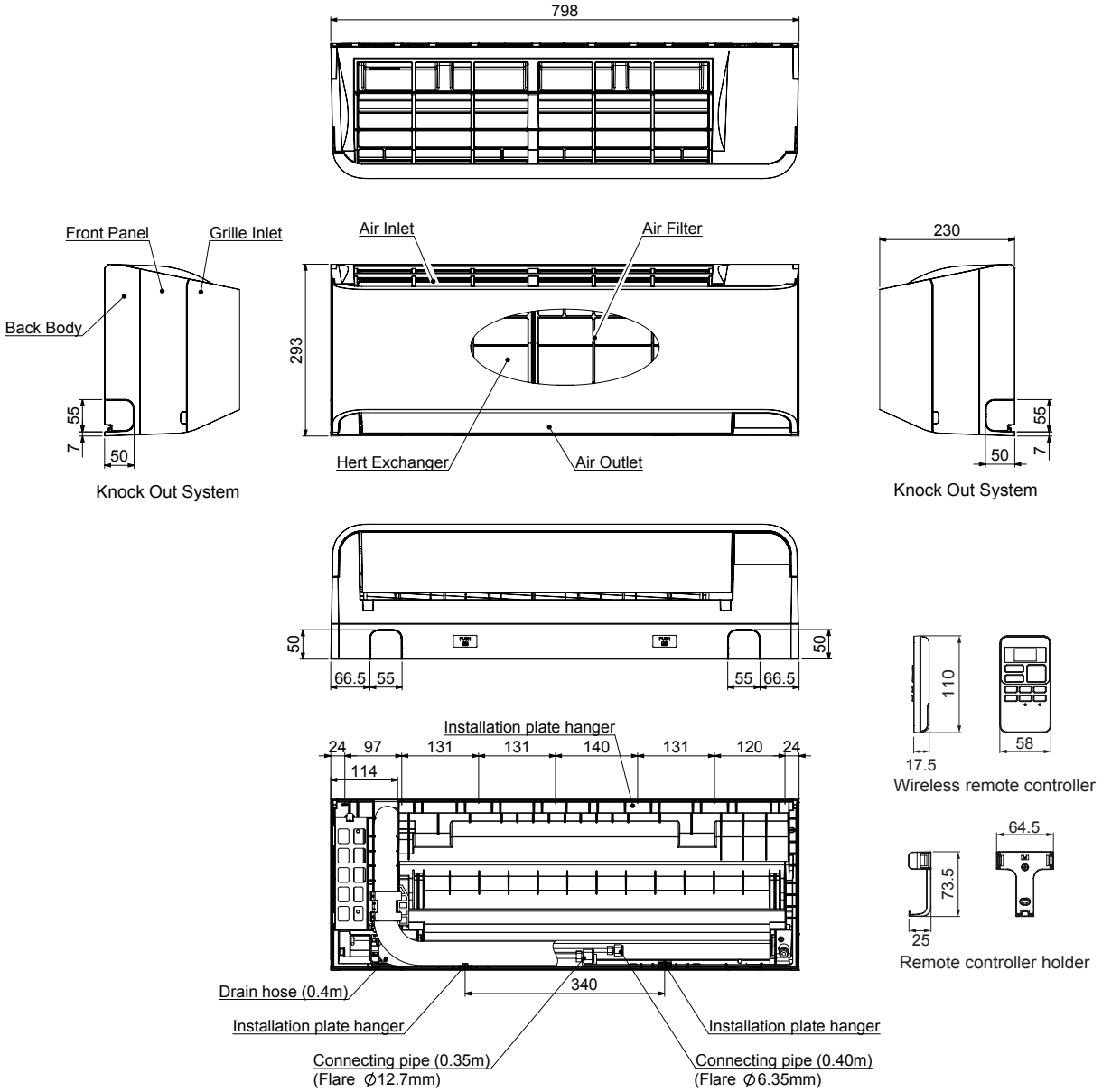

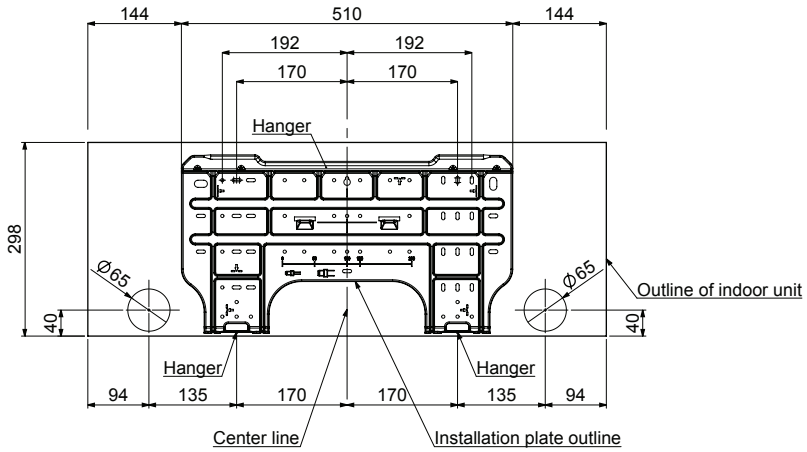

RAV-HM561KRTP-E/TR

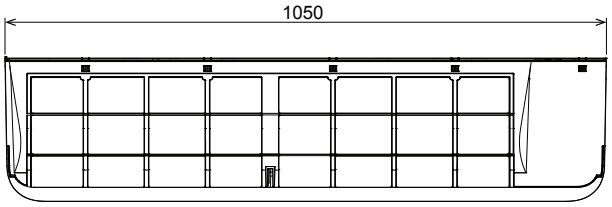

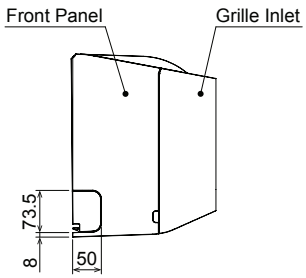

Knock Out System

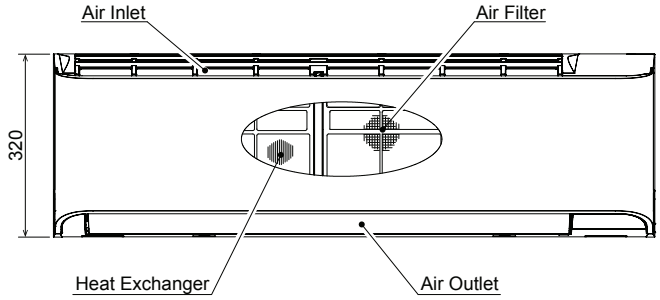

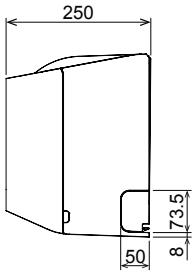

Knock Out System

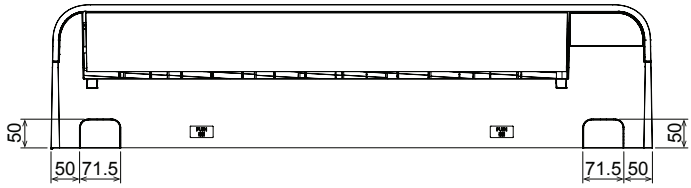

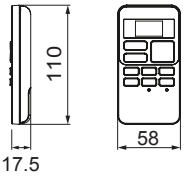

Wireless remote controller

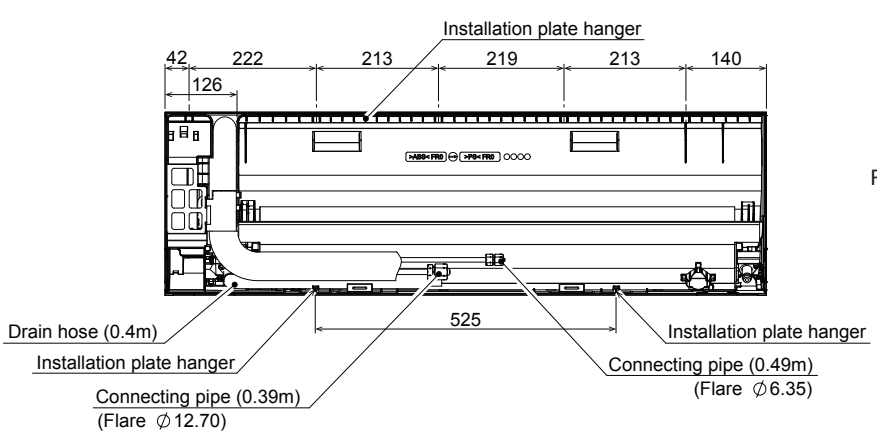

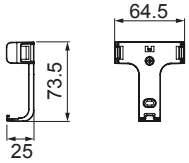

Remote controller holder

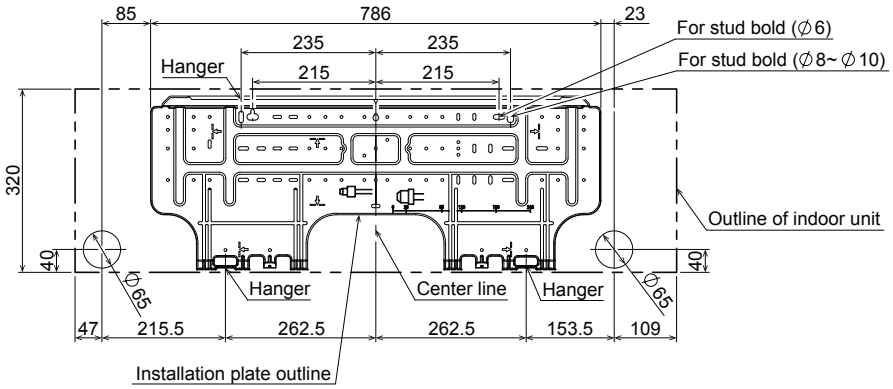

RAV-HM801KRTP-E/TR

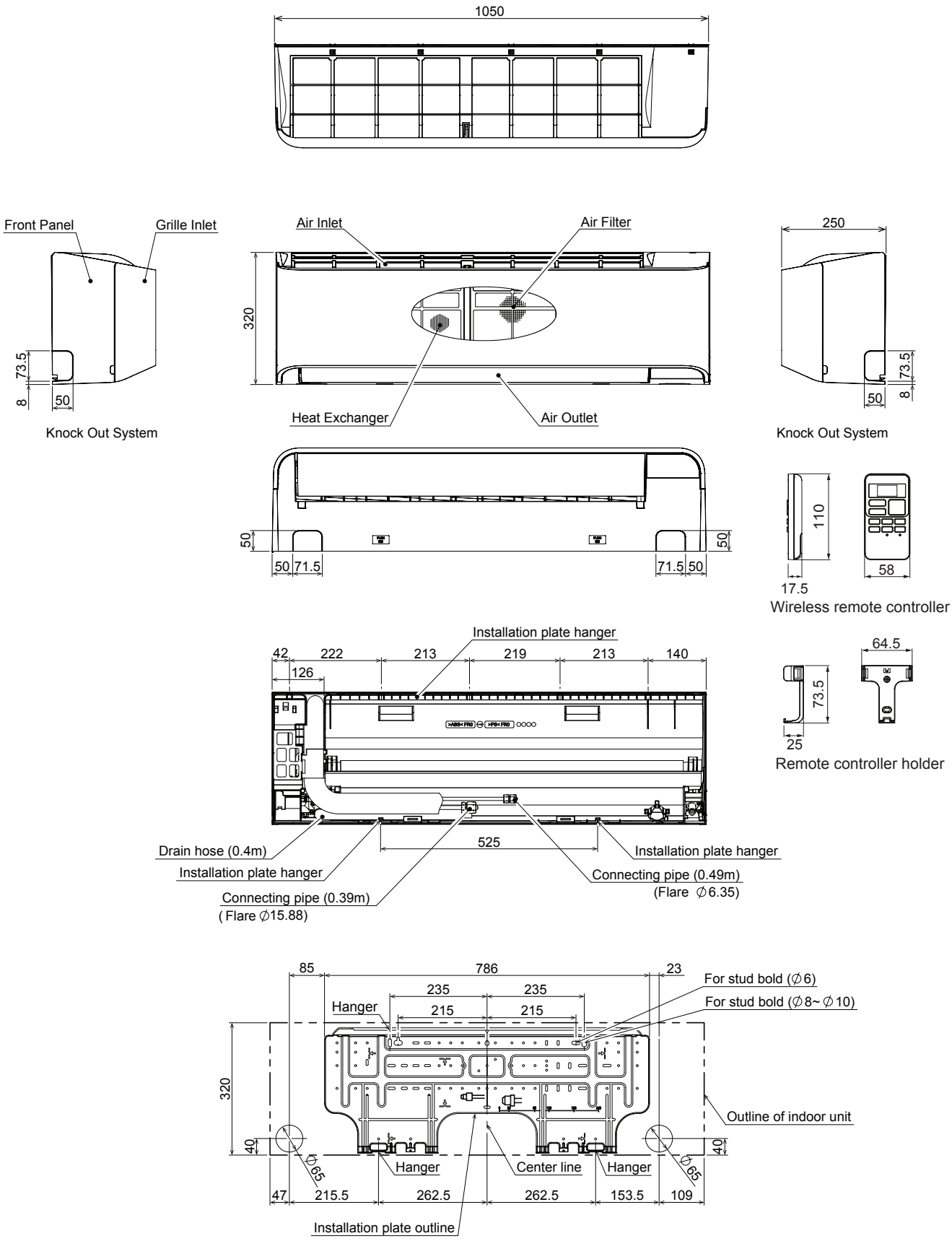

RAV-HM1101KRTP-E / TR

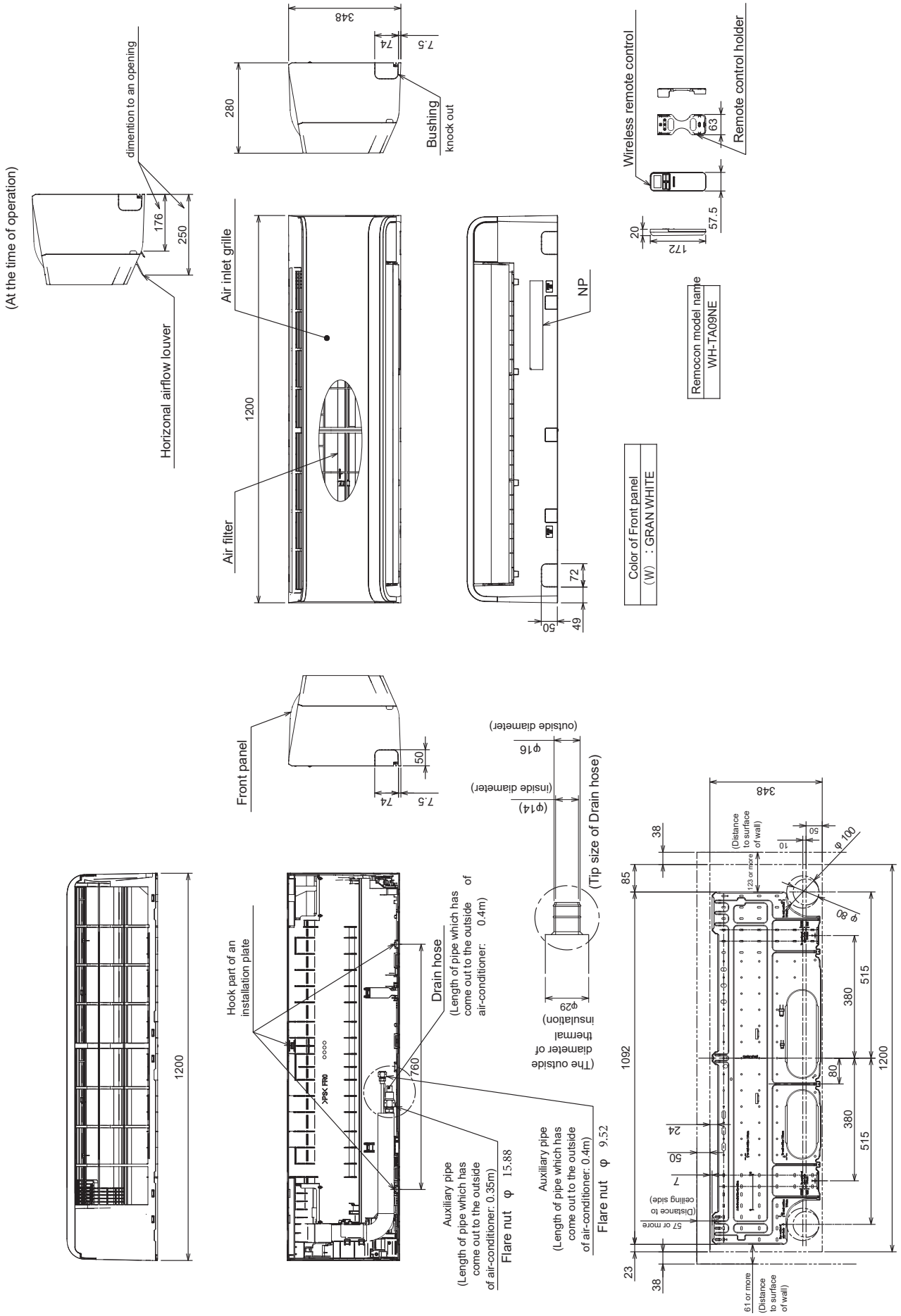

RAV-HM561KRSP-E / TR
<Cooling only>

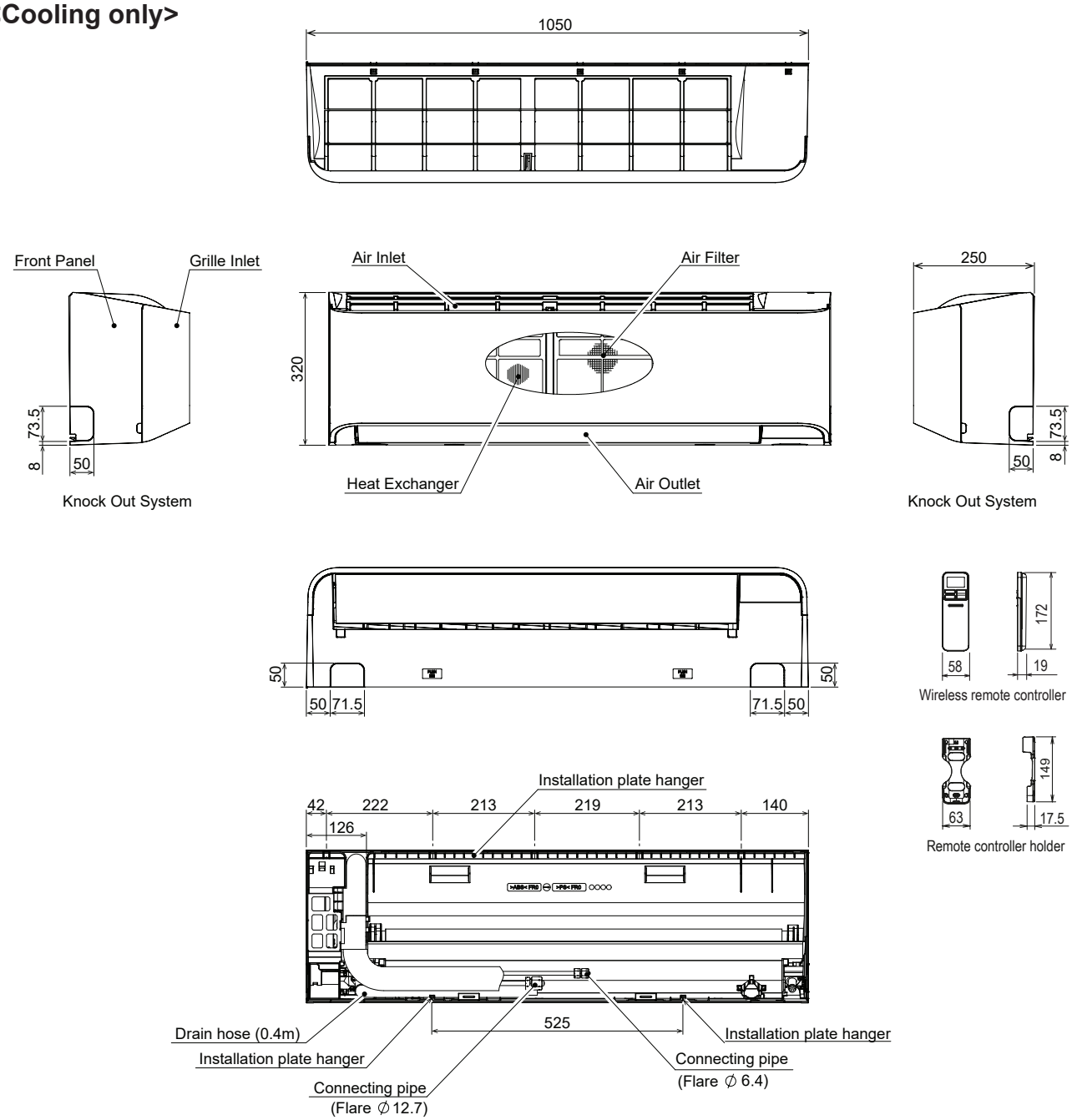

RAV-HM801KRSP-E / TR
<Cooling only>

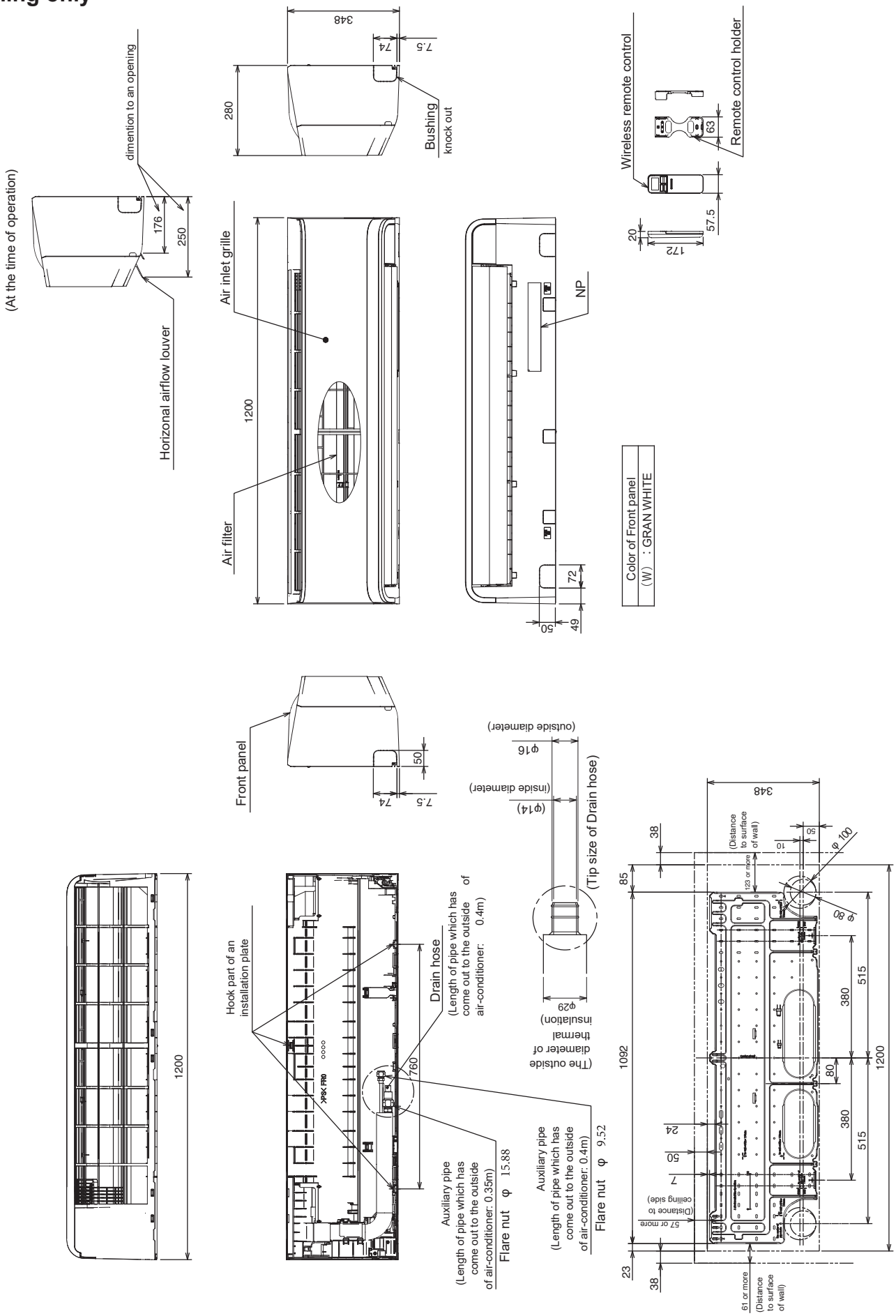

2-6-3. Wiring Diagrams

RAV-HM301KRTP-E/TR, RAV-HM401KRTP-E/TR, RAV-HM561KRTP-E/TR and RAV-HM801KRTP-E/TR

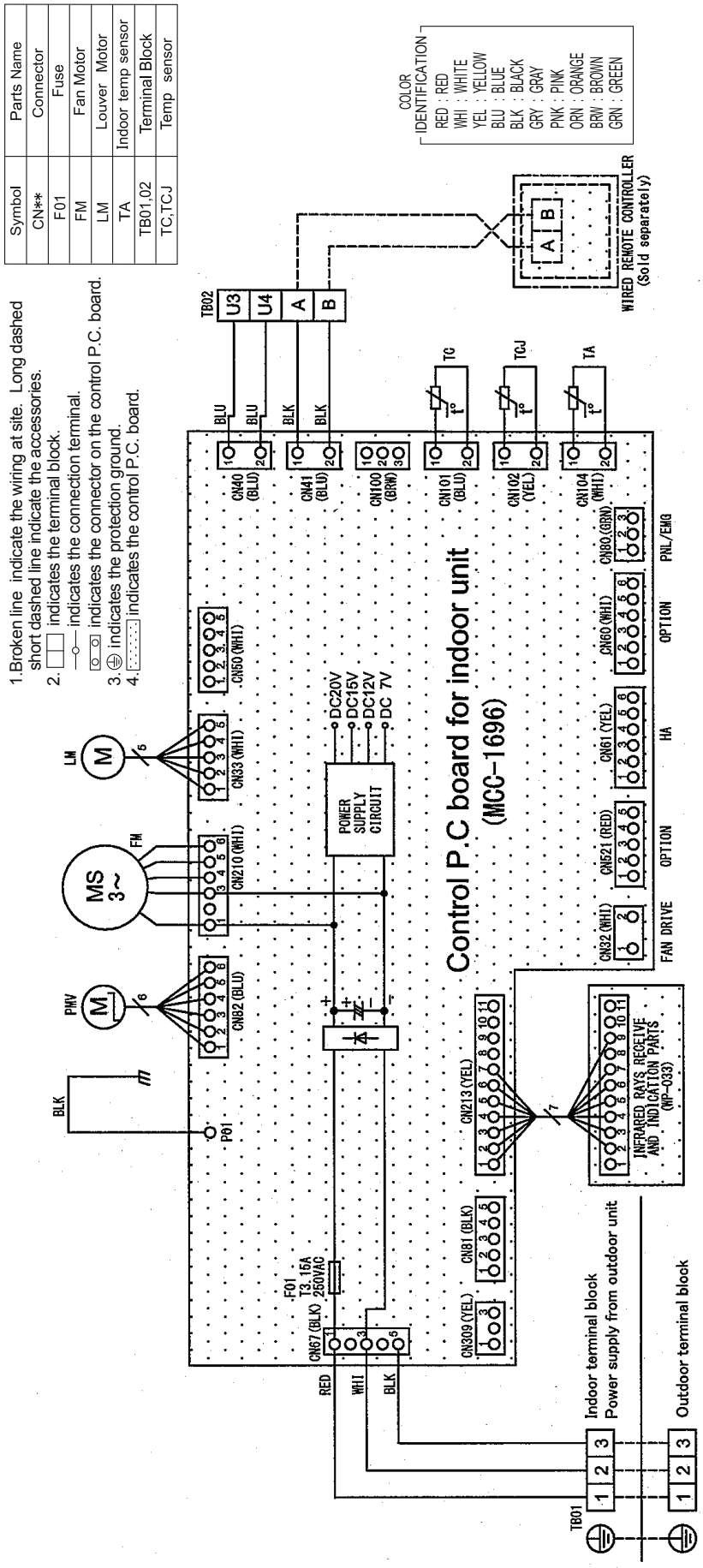

RAV-HM1101KRTP-E / TR

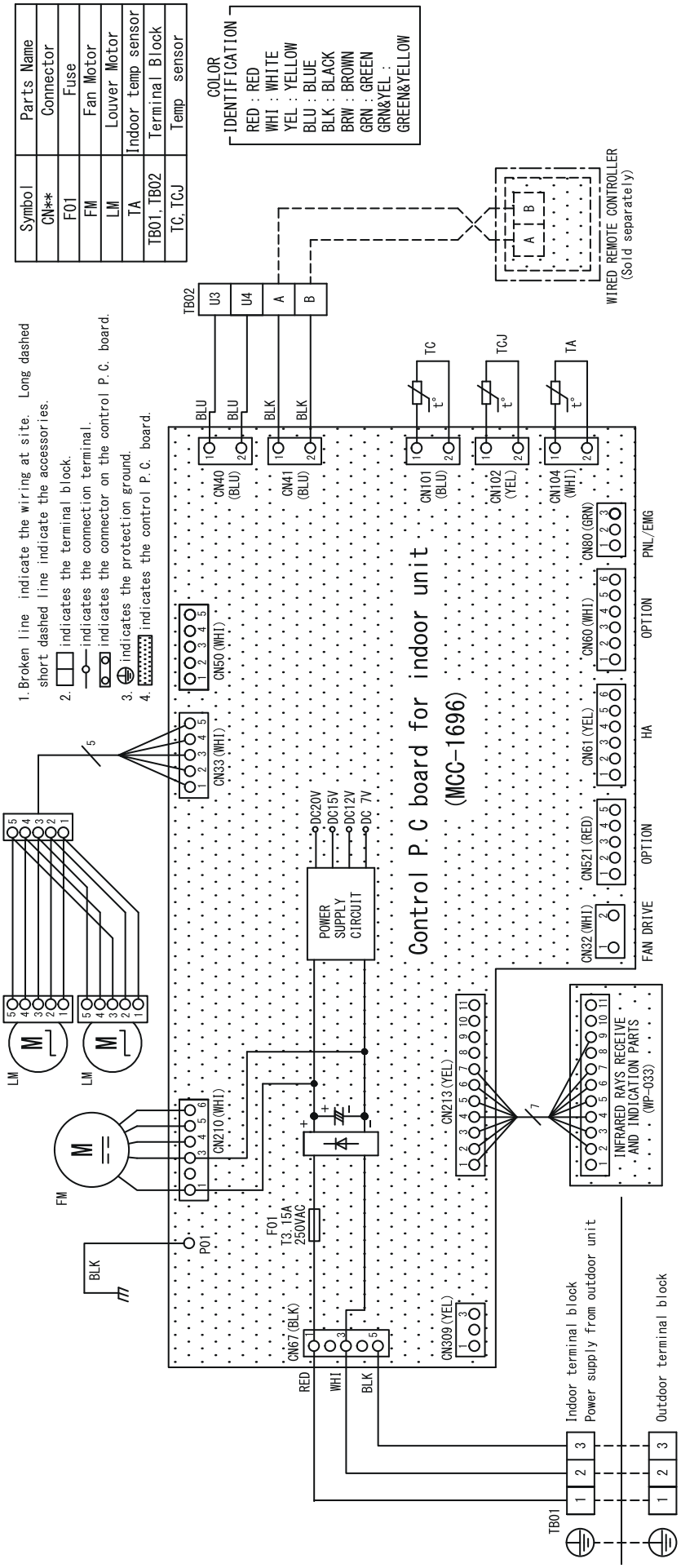

RAV-HM561KRSP-E / TR
<Cooling only>

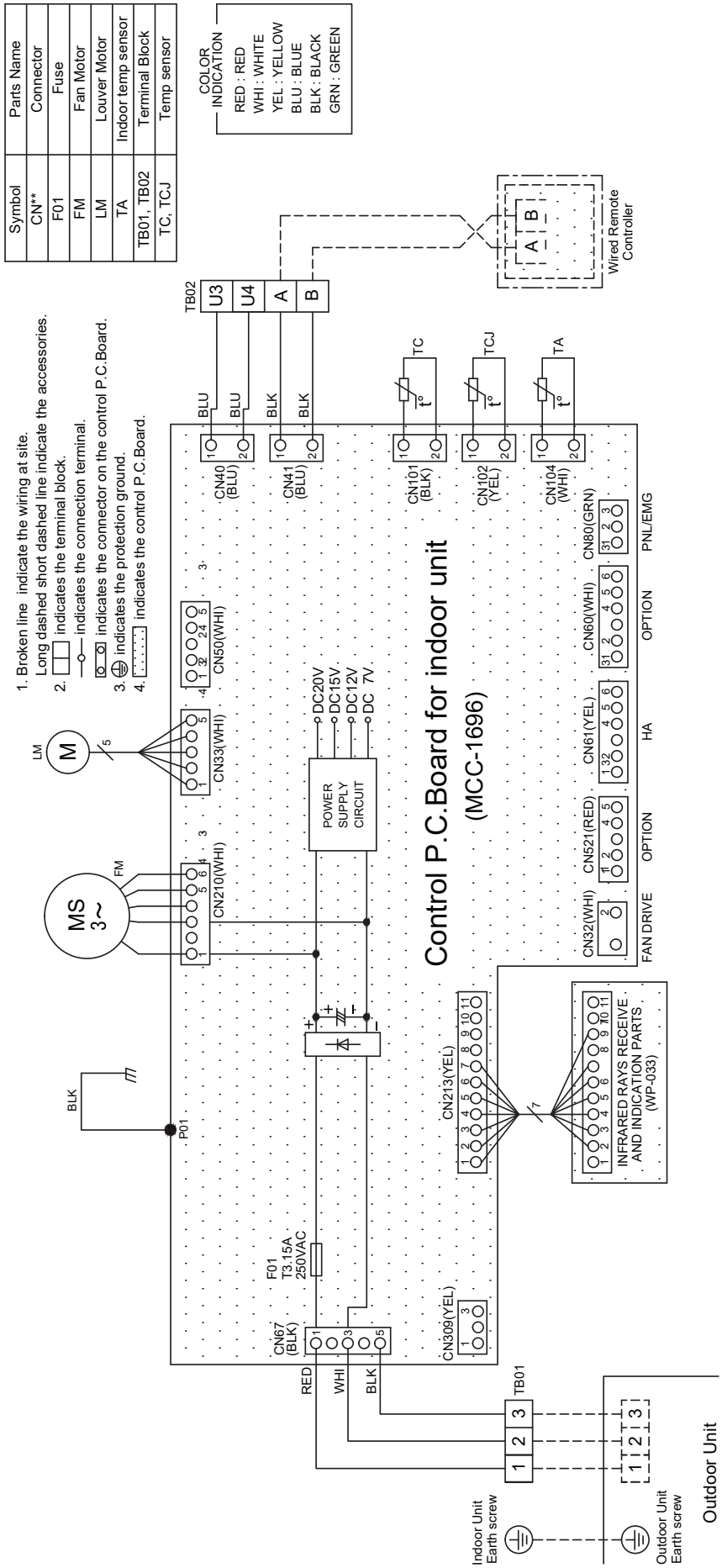

RAV-HM801KRSP-E / TR
<Cooling only>

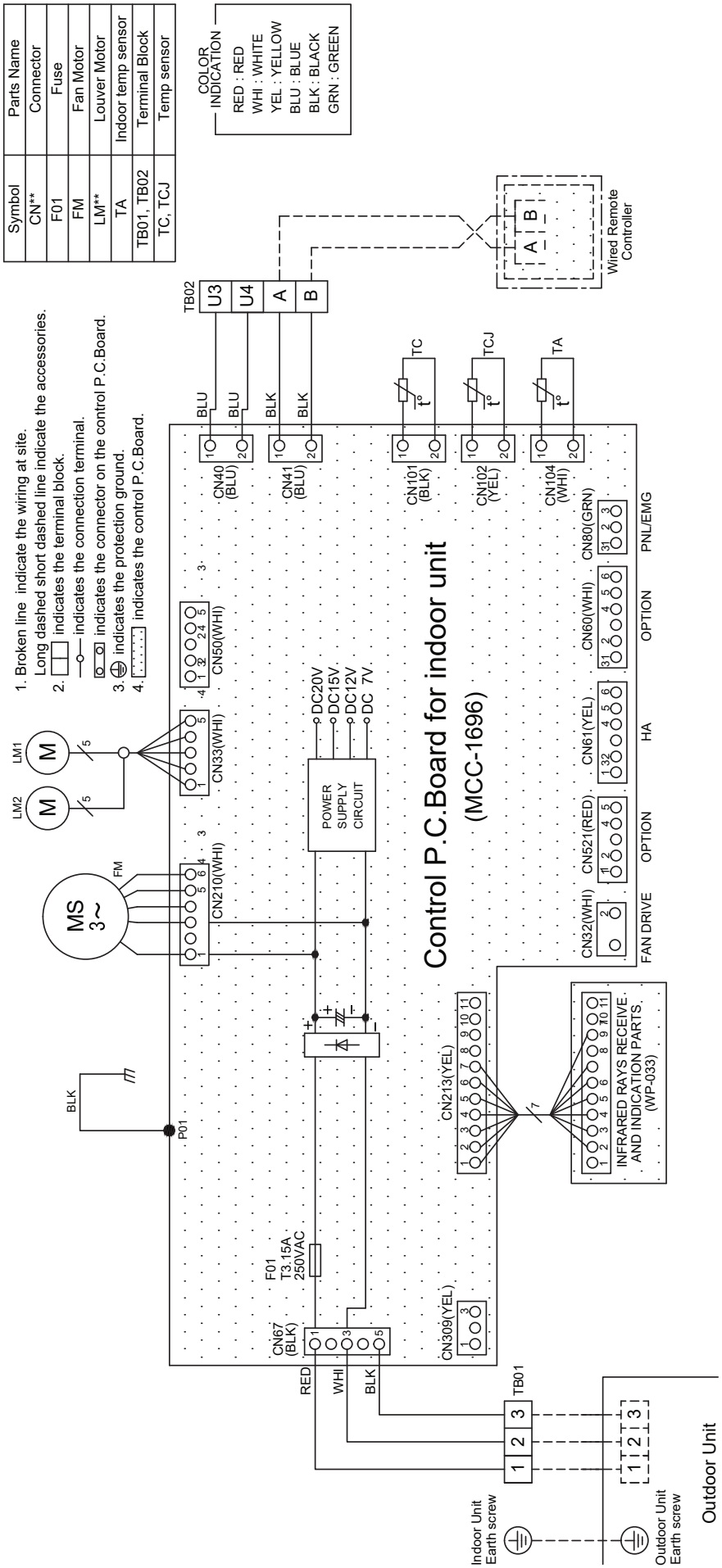

2-6-4. Sensible Capacity Table

Digital Inverter R32 Sensible Heat Capacity : RAV-HM***KRTP-E/TR

		Indoor Air temperature																	
Unit size	Outdoor air temp.	14.0 °F WB		15.0 °F WB		16.0 °F WB		17.0 °F WB		18.0 °F WB		19.0 °F WB		20.0 °F WB		22.0 °F WB		24.0 °F WB	
		20.0 °F DB		21.0 °F DB		23.0 °F DB		24.0 °F DB		26.0 °F DB		27.0 °F DB		28.0 °F DB		30.0 °F DB		32.0 °F DB	
	°C DB	TC	SHC	TC	SHC	TC	SHC	TC	SHC	TC	SHC	TC	SHC	TC	SHC	TC	SHC	TC	SHC
301	10.0	2.36	2.03	2.44	2.08	2.61	2.17	2.67	2.21	2.79	2.30	2.88	2.30	2.96	2.30	3.13	2.28	3.28	2.23
	12.0	2.34	2.02	2.43	2.06	2.59	2.15	2.65	2.20	2.77	2.29	2.85	2.28	2.94	2.28	3.11	2.26	3.25	2.22
	14.0	2.33	2.00	2.41	2.05	2.57	2.13	2.63	2.18	2.75	2.27	2.83	2.27	2.91	2.26	3.08	2.24	3.23	2.20
	16.0	2.31	1.99	2.39	2.03	2.55	2.12	2.61	2.16	2.73	2.25	2.81	2.25	2.89	2.25	3.06	2.22	3.20	2.18
	18.0	2.29	1.97	2.37	2.01	2.52	2.10	2.58	2.14	2.70	2.23	2.78	2.23	2.86	2.22	3.03	2.20	3.17	2.16
	20.0	2.26	1.95	2.34	1.99	2.50	2.08	2.56	2.12	2.68	2.21	2.76	2.20	2.83	2.20	3.00	2.18	3.14	2.14
	21.0	2.25	1.94	2.33	1.98	2.49	2.07	2.55	2.11	2.66	2.20	2.74	2.19	2.82	2.19	2.99	2.17	3.12	2.13
	23.0	2.23	1.92	2.31	1.96	2.46	2.05	2.52	2.09	2.64	2.17	2.71	2.17	2.79	2.17	2.96	2.15	3.09	2.11
	25.0	2.20	1.90	2.28	1.94	2.43	2.02	2.49	2.07	2.61	2.15	2.68	2.15	2.76	2.14	2.92	2.13	3.06	2.08
	27.0	2.18	1.87	2.25	1.92	2.40	2.00	2.46	2.04	2.58	2.12	2.65	2.12	2.73	2.12	2.89	2.10	3.02	2.06
	29.0	2.15	1.85	2.23	1.89	2.37	1.97	2.43	2.02	2.54	2.10	2.62	2.09	2.69	2.09	2.85	2.07	2.98	2.03
	31.0	2.12	1.83	2.20	1.87	2.34	1.95	2.40	1.99	2.51	2.07	2.58	2.07	2.66	2.07	2.81	2.05	2.94	2.01
	33.0	2.09	1.80	2.17	1.84	2.31	1.92	2.37	1.96	2.47	2.04	2.55	2.04	2.62	2.04	2.77	2.02	2.90	1.98
	35.0	2.05	1.77	2.12	1.81	2.27	1.88	2.32	1.92	2.43	2.00	2.50	2.00	2.57	2.00	2.72	1.98	2.85	1.94
	37.0	2.03	1.75	2.10	1.79	2.24	1.86	2.29	1.90	2.40	1.98	2.47	1.98	2.54	1.98	2.69	1.96	2.82	1.92
	39.0	2.00	1.72	2.07	1.76	2.21	1.83	2.26	1.87	2.36	1.95	2.43	1.95	2.50	1.94	2.65	1.93	2.77	1.89

		Indoor Air temperature																	
Unit size	Outdoor air temp.	14.0 °F WB		15.0 °F WB		16.0 °F WB		17.0 °F WB		18.0 °F WB		19.0 °F WB		20.0 °F WB		22.0 °F WB		24.0 °F WB	
		20.0 °F DB		21.0 °F DB		23.0 °F DB		24.0 °F DB		26.0 °F DB		27.0 °F DB		28.0 °F DB		30.0 °F DB		32.0 °F DB	
	°C DB	TC	SHC	TC	SHC	TC	SHC	TC	SHC	TC	SHC	TC	SHC	TC	SHC	TC	SHC	TC	SHC
401	10.0	3.40	2.76	3.52	2.82	3.76	2.93	3.85	3.00	4.02	3.12	4.14	3.11	4.26	3.10	4.51	3.05	4.72	2.98
	12.0	3.38	2.74	3.49	2.80	3.73	2.91	3.82	2.97	3.99	3.09	4.11	3.08	4.23	3.08	4.48	3.03	4.68	2.96
	14.0	3.35	2.72	3.47	2.78	3.70	2.89	3.79	2.95	3.96	3.07	4.08	3.06	4.19	3.05	4.44	3.01	4.65	2.94
	16.0	3.32	2.69	3.44	2.75	3.67	2.86	3.75	2.92	3.93	3.04	4.04	3.03	4.16	3.02	4.40	2.98	4.61	2.91
	18.0	3.29	2.67	3.41	2.73	3.63	2.84	3.72	2.90	3.89	3.02	4.01	3.01	4.12	3.00	4.36	2.96	4.57	2.88
	20.0	3.26	2.64	3.37	2.70	3.60	2.81	3.68	2.87	3.85	2.99	3.97	2.98	4.08	2.97	4.32	2.93	4.52	2.86
	21.0	3.24	2.63	3.36	2.69	3.58	2.80	3.67	2.86	3.84	2.97	3.95	2.96	4.06	2.95	4.30	2.91	4.50	2.84
	23.0	3.21	2.60	3.32	2.66	3.54	2.77	3.63	2.83	3.79	2.94	3.91	2.93	4.02	2.92	4.26	2.88	4.45	2.81
	25.0	3.17	2.57	3.28	2.63	3.50	2.74	3.59	2.79	3.75	2.91	3.86	2.90	3.97	2.89	4.21	2.85	4.40	2.78
	27.0	3.14	2.54	3.24	2.60	3.46	2.70	3.54	2.76	3.71	2.87	3.82	2.86	3.93	2.86	4.16	2.82	4.35	2.75
	29.0	3.10	2.51	3.20	2.57	3.42	2.67	3.50	2.73	3.66	2.84	3.77	2.83	3.88	2.82	4.11	2.78	4.29	2.71
	31.0	3.06	2.48	3.16	2.53	3.37	2.64	3.45	2.69	3.61	2.80	3.72	2.79	3.83	2.78	4.05	2.74	4.24	2.68
	33.0	3.01	2.44	3.12	2.50	3.33	2.60	3.41	2.65	3.56	2.76	3.67	2.75	3.77	2.74	4.00	2.71	4.18	2.64
	35.0	2.96	2.40	3.06	2.45	3.27	2.55	3.34	2.60	3.50	2.71	3.60	2.70	3.70	2.69	3.92	2.66	4.10	2.59
	37.0	2.92	2.37	3.02	2.42	3.23	2.52	3.30	2.57	3.46	2.68	3.56	2.67	3.66	2.66	3.88	2.63	4.05	2.56
	39.0	2.88	2.33	2.98	2.38	3.18	2.48	3.25	2.53	3.40	2.64	3.50	2.63	3.60	2.62	3.81	2.58	3.99	2.52

		Indoor Air temperature																	
Unit size	Outdoor air temp.	14.0 °F WB		15.0 °F WB		16.0 °F WB		17.0 °F WB		18.0 °F WB		19.0 °F WB		20.0 °F WB		22.0 °F WB		24.0 °F WB	
		20.0 °F DB		21.0 °F DB		23.0 °F DB		24.0 °F DB		26.0 °F DB		27.0 °F DB		28.0 °F DB		30.0 °F DB		32.0 °F DB	
	°C DB	TC	SHC	TC	SHC	TC	SHC	TC	SHC	TC	SHC	TC	SHC	TC	SHC	TC	SHC	TC	SHC
801	10.0	6.33	4.83	6.55	4.93	6.99	5.12	7.16	5.23	7.49	5.44	7.71	5.41	7.93	5.38	8.40	5.28	8.78	5.12
	12.0	6.28	4.79	6.50	4.89	6.94	5.08	7.10	5.19	7.43	5.40	7.65	5.37	7.87	5.34	8.33	5.24	8.72	5.08
	14.0	6.23	4.75	6.45	4.85	6.88	5.04	7.05	5.15	7.37	5.36	7.59	5.32	7.81	5.30	8.27	5.20	8.65	5.04
	16.0	6.18	4.71	6.40	4.81	6.83	5.00	6.99	5.10	7.31	5.31	7.53	5.28	7.74	5.25	8.20	5.15	8.57	5.00
	18.0	6.13	4.67	6.34	4.77	6.76	4.95	6.92	5.06	7.24	5.26	7.46	5.23	7.67	5.21	8.12	5.11	8.50	4.96
	20.0	6.07	4.62	6.28	4.72	6.70	4.91	6.86	5.01	7.17	5.21	7.39	5.18	7.60	5.16	8.04	5.06	8.41	4.91
	21.0	6.04	4.60	6.25	4.70	6.67	4.88	6.82	4.98	7.14	5.19	7.35	5.15	7.56	5.13	8.00	5.03	8.37	4.88
	23.0	5.97	4.55	6.18	4.65	6.60	4.83	6.75	4.93	7.06	5.13	7.27	5.10	7.48	5.08	7.92	4.98	8.28	4.83
	25.0	5.91	4.50	6.11	4.60	6.52	4.78	6.68	4.88	6.98	5.07	7.19	5.04	7.40	5.02	7.83	4.92	8.19	4.78
	27.0	5.84	4.45	6.04	4.54	6.44	4.72	6.60	4.82	6.90	5.01	7.10	4.98	7.31	4.96	7.74	4.87	8.09	4.72
	29.0	5.76	4.39	5.96	4.49	6.36	4.66	6.51	4.76	6.82	4.95	7.02	4.92	7.22	4.90	7.64	4.80	7.99	4.66
	31.0	5.69	4.34	5.88	4.43	6.28	4.60	6.43	4.70	6.73	4.89	6.92	4.86	7.12	4.83	7.54	4.74	7.89	4.60
	33.0	5.61	4.27	5.80	4.37	6.19	4.54	6.34	4.63	6.63	4.82	6.83	4.79	7.02	4.77	7.44	4.68	7.78	4.54
	35.0	5.50	4.20	5.69	4.28	6.08	4.45	6.22	4.54	6.51	4.73	6.70	4.70	6.89	4.68	7.30	4.59	7.63	4.45
	37.0	5.44	4.15	5.63	4.24	6.01	4.40	6.15	4.49	6.43	4.67	6.62	4.65	6.81	4.62	7.21	4.54	7.55	4.40
	39.0	5.35	4.08	5.54	4.17	5.91	4.33	6.05	4.42	6.33	4.60	6.52	4.57	6.70	4.55	7.10	4.46	7.42	4.33

TC:Total Capacity [kW]

SHC:Sensible Heat Capacity [kW]

Product models : RAV-HM561KRTP-E/TR ; RAV-GM561ATP-E1/TR1, RAV-GM561ATJP-E1

Specification of product at standard condition

Standard Condition		
	Indoor	27°C (DB) / 19°C (WB)
	Outdoor	35°C (DB) / 24°C (WB)

Total Cooling Capacity (TC)	5.00	kW
Sensible Heat Capacity (SHC)	4.36	kW

Outdoor air temperature	Indoor air temperature													
	20.0°C (DB) 14.0°C (WB)		23.0°C (DB) 16.0°C (WB)		26.0°C (DB) 18.0°C (WB)		27.0°C (DB) 19.0°C (WB)		28.0°C (DB) 20.0°C (WB)		30.0°C (DB) 22.0°C (WB)		32.0°C (DB) 24.0°C (WB)	
DB (°C)	TC	SHC	TC	SHC	TC	SHC	TC	SHC	TC	SHC	TC	SHC	TC	SHC
10	5.42	5.06	5.99	5.41	6.42	5.75	6.60	5.76	6.79	5.77	7.19	5.75	7.52	5.67
11	5.37	5.01	5.93	5.36	6.35	5.70	6.54	5.70	6.73	5.71	7.12	5.69	7.45	5.62
12	5.32	4.96	5.87	5.30	6.29	5.64	6.48	5.65	6.66	5.66	7.05	5.64	7.38	5.56
13	5.27	4.91	5.82	5.25	6.23	5.59	6.41	5.59	6.60	5.60	6.98	5.58	7.30	5.51
14	5.21	4.86	5.76	5.20	6.17	5.53	6.35	5.54	6.53	5.55	6.91	5.53	7.23	5.45
15	5.16	4.81	5.70	5.15	6.10	5.47	6.28	5.48	6.46	5.49	6.84	5.47	7.16	5.40
16	5.11	4.77	5.64	5.09	6.04	5.42	6.22	5.42	6.40	5.43	6.77	5.41	7.09	5.34
17	5.06	4.72	5.58	5.04	5.98	5.36	6.16	5.37	6.33	5.38	6.70	5.36	7.01	5.29
18	5.00	4.67	5.52	4.99	5.92	5.31	6.09	5.31	6.27	5.32	6.63	5.30	6.94	5.23
19	4.95	4.62	5.47	4.94	5.85	5.25	6.03	5.26	6.20	5.26	6.56	5.25	6.87	5.18
20	4.90	4.57	5.41	4.88	5.79	5.20	5.96	5.20	6.13	5.21	6.49	5.19	6.79	5.12
21	4.84	4.52	5.35	4.83	5.73	5.14	5.90	5.14	6.07	5.15	6.43	5.13	6.72	5.07
22	4.79	4.47	5.29	4.78	5.67	5.08	5.83	5.09	6.00	5.10	6.36	5.08	6.65	5.01
23	4.74	4.42	5.23	4.73	5.60	5.03	5.77	5.03	5.94	5.04	6.29	5.02	6.57	4.96
24	4.69	4.37	5.18	4.67	5.54	4.97	5.71	4.98	5.87	4.98	6.22	4.97	6.50	4.90
25	4.63	4.32	5.12	4.62	5.48	4.92	5.64	4.92	5.80	4.93	6.15	4.91	6.43	4.85
26	4.58	4.27	5.06	4.57	5.42	4.86	5.58	4.86	5.74	4.87	6.08	4.86	6.35	4.79
27	4.53	4.22	5.00	4.52	5.36	4.80	5.51	4.81	5.67	4.82	6.01	4.80	6.28	4.74
28	4.48	4.18	4.94	4.46	5.29	4.75	5.45	4.75	5.61	4.76	5.94	4.74	6.21	4.68
29	4.42	4.13	4.88	4.41	5.23	4.69	5.39	4.70	5.54	4.70	5.87	4.69	6.14	4.63
30	4.37	4.08	4.83	4.36	5.17	4.64	5.32	4.64	5.47	4.65	5.80	4.63	6.06	4.57
31	4.32	4.03	4.77	4.31	5.11	4.58	5.26	4.58	5.41	4.59	5.73	4.58	5.99	4.52
32	4.27	3.98	4.71	4.25	5.04	4.52	5.19	4.53	5.34	4.54	5.66	4.52	5.92	4.46
33	4.21	3.93	4.65	4.20	4.98	4.47	5.13	4.47	5.28	4.48	5.59	4.46	5.84	4.40
34	4.16	3.88	4.59	4.15	4.92	4.41	5.06	4.42	5.21	4.42	5.52	4.41	5.77	4.35
35	**4.11**	**3.83**	**4.54**	**4.10**	**4.86**	**4.36**	**5.00**	**4.36**	**5.14**	**4.37**	**5.45**	**4.35**	**5.70**	**4.29**
36	4.05	3.78	4.48	4.04	4.79	4.30	4.94	4.30	5.08	4.31	5.38	4.30	5.62	4.24
37	4.00	3.73	4.42	3.99	4.73	4.24	4.87	4.25	5.01	4.26	5.31	4.24	5.55	4.18
38	3.95	3.68	4.36	3.94	4.67	4.19	4.81	4.19	4.94	4.20	5.24	4.19	5.48	4.13
39	3.90	3.63	4.30	3.89	4.61	4.13	4.74	4.14	4.88	4.14	5.17	4.13	5.40	4.07
40	3.14	2.93	3.47	3.13	3.72	3.33	3.83	3.34	3.94	3.34	4.17	3.33	4.36	3.29
41	3.03	2.83	3.35	3.02	3.59	3.22	3.69	3.22	3.80	3.22	4.02	3.21	4.21	3.17
42	2.92	2.72	3.23	2.91	3.45	3.10	3.56	3.10	3.66	3.11	3.87	3.10	4.05	3.05
43	2.81	2.62	3.10	2.80	3.32	2.98	3.42	2.98	3.52	2.99	3.73	2.98	3.90	2.94
44	2.70	2.52	2.98	2.69	3.19	2.86	3.28	2.86	3.38	2.87	3.58	2.86	3.74	2.82
45	1.76	1.64	1.95	1.76	2.08	1.87	2.14	1.87	2.21	1.87	2.34	1.87	2.44	1.84
46	1.65	1.54	1.82	1.65	1.95	1.75	2.01	1.75	2.07	1.76	2.19	1.75	2.29	1.73

Product models : RAV-HM1101KRTP-E/TR ; RAV-GM1101ATP-E1/TR1, RAV-GM1101ATJP-E1

Specification of product at standard condition

Standard Condition		
	Indoor	27°C (DB) / 19°C (WB)
	Outdoor	35°C (DB) / 24°C (WB)

Total Cooling Capacity (TC)	9.50	kW
Sensible Heat Capacity (SHC)	7.10	kW

Outdoor air temperature	Indoor air temperature													
	20.0°C (DB) 14.0°C (WB)		23.0°C (DB) 16.0°C (WB)		26.0°C (DB) 18.0°C (WB)		27.0°C (DB) 19.0°C (WB)		28.0°C (DB) 20.0°C (WB)		30.0°C (DB) 22.0°C (WB)		32.0°C (DB) 24.0°C (WB)	
DB (°C)	TC	SHC	TC	SHC	TC	SHC	TC	SHC	TC	SHC	TC	SHC	TC	SHC
20	9.31	7.52	10.28	8.00	11.00	8.50	11.33	8.47	11.65	8.44	12.34	8.32	12.91	8.12
21	9.21	7.44	10.17	7.91	10.89	8.41	11.21	8.38	11.53	8.35	12.21	8.23	12.77	8.03
22	9.11	7.36	10.06	7.83	10.77	8.32	11.08	8.28	11.40	8.26	12.07	8.15	12.63	7.95
23	9.01	7.28	9.94	7.74	10.65	8.23	10.96	8.19	11.28	8.17	11.94	8.06	12.49	7.86
24	8.90	7.20	9.83	7.65	10.53	8.13	10.84	8.10	11.15	8.08	11.81	7.97	12.35	7.77
25	8.80	7.12	9.72	7.57	10.41	8.04	10.72	8.01	11.03	7.99	11.68	7.88	12.21	7.68
26	8.70	7.03	9.61	7.48	10.29	7.95	10.60	7.92	10.90	7.90	11.54	7.79	12.07	7.60
27	8.60	6.95	9.50	7.40	10.18	7.86	10.48	7.83	10.77	7.81	11.41	7.70	11.93	7.51
28	8.50	6.87	9.39	7.31	10.06	7.77	10.35	7.74	10.65	7.72	11.28	7.61	11.80	7.42
29	8.40	6.79	9.28	7.22	9.94	7.68	10.23	7.65	10.52	7.63	11.15	7.52	11.66	7.34
30	8.30	6.71	9.17	7.14	9.82	7.59	10.11	7.56	10.40	7.54	11.01	7.43	11.52	7.25
31	8.20	6.63	9.06	7.05	9.70	7.49	9.99	7.46	10.27	7.44	10.88	7.34	11.38	7.16
32	8.10	6.55	8.95	6.97	9.58	7.40	9.87	7.37	10.15	7.35	10.75	7.25	11.24	7.07
33	8.00	6.47	8.84	6.88	9.47	7.31	9.74	7.28	10.02	7.26	10.61	7.16	11.10	6.99
34	7.90	6.39	8.73	6.79	9.35	7.22	9.62	7.19	9.90	7.17	10.48	7.07	10.96	6.90
35	7.80	6.31	8.62	6.71	9.23	7.13	9.50	7.10	9.77	7.08	10.35	6.98	10.82	6.81
36	7.70	6.23	8.51	6.62	9.11	7.04	9.38	7.01	9.65	6.99	10.22	6.89	10.68	6.72
37	7.60	6.14	8.40	6.54	8.99	6.94	9.26	6.92	9.52	6.90	10.08	6.80	10.55	6.64
38	7.50	6.06	8.29	6.45	8.87	6.85	9.13	6.83	9.40	6.81	9.95	6.71	10.41	6.55
39	7.40	5.98	8.18	6.36	8.75	6.76	9.01	6.74	9.27	6.72	9.82	6.62	10.27	6.46
40	7.30	5.90	8.06	6.28	8.64	6.67	8.89	6.64	9.14	6.63	9.68	6.53	10.13	6.37
41	7.20	5.82	7.95	6.19	8.52	6.58	8.77	6.55	9.02	6.54	9.55	6.44	9.99	6.29
42	7.10	5.74	7.84	6.10	8.40	6.49	8.65	6.46	8.89	6.45	9.42	6.35	9.85	6.20
43	7.00	5.66	7.73	6.02	8.28	6.40	8.52	6.37	8.77	6.35	9.29	6.26	9.71	6.11
44	6.90	5.58	7.62	5.93	8.16	6.30	8.40	6.28	8.64	6.26	9.15	6.17	9.57	6.02
45	6.80	5.50	7.51	5.85	8.04	6.21	8.28	6.19	8.52	6.17	9.02	6.08	9.43	5.94
46	6.70	5.42	7.40	5.76	7.93	6.12	8.16	6.10	8.39	6.08	8.89	6.00	9.30	5.85

Product models : **RAV-HM561KRSP-E ; RAV-GM561ATP-E**

Standard Condition

Indoor	27.0 °C DB / 19.0 °C WB
Outdoor	35.0 °C DB / 24.0 °C WB

Specification of product at standard condition.

Total Cooling Capacity (TC)	**5.00**	**kW**
Sensible Heat Capacity (SHC)	**4.10**	**kW**

	Indoor Air temperature																	
Outdoor air temp.	14.0 °C WB		15.0 °C WB		16.0 °C WB		17.0 °C WB		18.0 °C WB		19.0 °C WB		20.0 °C WB		22.0 °C WB		24.0 °C WB	
	20.0 °C DB		21.0 °C DB		23.0 °C DB		24.0 °C DB		26.0 °C DB		27.0 °C DB		28.0 °C DB		30.0 °C DB		32.0 °C DB	
°C DB	TC	SHC	TC	SHC	TC	SHC	TC	SHC	TC	SHC	TC	SHC	TC	SHC	TC	SHC	TC	SHC
10.0	5.42	4.78	5.61	4.89	5.99	5.10	6.13	5.21	6.42	5.42	6.60	5.42	6.79	5.42	7.19	5.38	7.52	5.28
12.0	5.32	4.69	5.50	4.79	5.87	5.00	6.01	5.11	6.29	5.32	6.48	5.31	6.66	5.31	7.05	5.27	7.38	5.18
14.0	5.21	4.59	5.40	4.70	5.76	4.90	5.89	5.00	6.17	5.21	6.35	5.20	6.53	5.21	6.91	5.17	7.23	5.08
16.0	5.11	4.50	5.29	4.60	5.64	4.80	5.78	4.90	6.04	5.10	6.22	5.10	6.40	5.10	6.77	5.06	7.09	4.97
18.0	5.00	4.41	5.18	4.51	5.52	4.70	5.66	4.80	5.92	5.00	6.09	4.99	6.27	5.00	6.63	4.96	6.94	4.87
20.0	4.90	4.31	5.07	4.41	5.41	4.60	5.54	4.70	5.79	4.89	5.96	4.89	6.13	4.89	6.49	4.85	6.79	4.77
21.0	4.84	4.27	5.01	4.37	5.35	4.55	5.48	4.65	5.73	4.84	5.90	4.84	6.07	4.84	6.43	4.80	6.72	4.72
23.0	4.74	4.17	4.90	4.27	5.23	4.45	5.36	4.55	5.60	4.74	5.77	4.73	5.94	4.73	6.29	4.70	6.57	4.61
25.0	4.63	4.08	4.80	4.18	5.12	4.36	5.24	4.45	5.48	4.63	5.64	4.63	5.80	4.63	6.15	4.59	6.43	4.51
27.0	4.53	3.99	4.69	4.08	5.00	4.26	5.12	4.35	5.36	4.53	5.51	4.52	5.67	4.52	6.01	4.49	6.28	4.41
29.0	4.42	3.90	4.58	3.99	4.88	4.16	5.00	4.25	5.23	4.42	5.39	4.42	5.54	4.42	5.87	4.38	6.14	4.31
31.0	4.32	3.80	4.47	3.89	4.77	4.06	4.88	4.14	5.11	4.31	5.26	4.31	5.41	4.31	5.73	4.28	5.99	4.20
33.0	4.21	3.71	4.36	3.80	4.65	3.96	4.76	4.04	4.98	4.21	5.13	4.21	5.28	4.21	5.59	4.17	5.84	4.10
35.0	4.11	3.62	4.25	3.70	4.54	3.86	4.64	3.94	4.86	4.10	5.00	4.10	5.14	4.10	5.45	4.07	5.70	4.00
37.0	4.00	3.52	4.14	3.61	4.42	3.76	4.52	3.84	4.73	4.00	4.87	3.99	5.01	4.00	5.31	3.97	5.55	3.90
39.0	3.90	3.43	4.03	3.51	4.30	3.66	4.40	3.74	4.61	3.89	4.74	3.89	4.88	3.89	5.17	3.86	5.40	3.79
40.0	3.24	2.85	3.35	2.92	3.58	3.04	3.66	3.11	3.83	3.24	3.94	3.23	4.05	3.23	4.29	3.21	4.49	3.15
42.0	3.04	2.68	3.15	2.74	3.36	2.86	3.44	2.92	3.59	3.04	3.70	3.03	3.81	3.03	4.03	3.01	4.22	2.96
43.0	2.94	2.59	3.04	2.65	3.25	2.76	3.32	2.82	3.48	2.94	3.58	2.94	3.68	2.94	3.90	2.91	4.08	2.86
45.0	2.10	1.85	2.17	1.89	2.32	1.97	2.37	2.01	2.48	2.10	2.55	2.09	2.63	2.09	2.78	2.08	2.91	2.04
46.0	2.00	1.76	2.07	1.80	2.21	1.88	2.26	1.92	2.36	2.00	2.43	2.00	2.50	2.00	2.65	1.98	2.77	1.95

Product models : **RAV-HM801KRSP-E ; RAV-GM801ATP-E**

Standard Condition

Indoor	27.0 °C DB / 19.0 °C WB
Outdoor	35.0 °C DB / 24.0 °C WB

Specification of product at standard condition.

Total Cooling Capacity (TC)	**6.70**	**kW**
Sensible Heat Capacity (SHC)	**5.63**	**kW**

	Indoor Air temperature																	
Outdoor air temp.	14.0 °C WB		15.0 °C WB		16.0 °C WB		17.0 °C WB		18.0 °C WB		19.0 °C WB		20.0 °C WB		22.0 °C WB		24.0 °C WB	
	20.0 °C DB		21.0 °C DB		23.0 °C DB		24.0 °C DB		26.0 °C DB		27.0 °C DB		28.0 °C DB		30.0 °C DB		32.0 °C DB	
°C DB	TC	SHC	TC	SHC	TC	SHC	TC	SHC	TC	SHC	TC	SHC	TC	SHC	TC	SHC	TC	SHC
10.0	7.27	6.55	7.52	6.70	8.03	6.99	8.22	7.14	8.60	7.44	8.85	7.44	9.10	7.44	9.64	7.40	10.08	7.28
12.0	7.13	6.42	7.38	6.57	7.87	6.86	8.06	7.00	8.43	7.29	8.68	7.29	8.93	7.30	9.45	7.25	9.89	7.14
14.0	6.99	6.30	7.23	6.44	7.72	6.72	7.90	6.87	8.26	7.15	8.51	7.15	8.75	7.15	9.27	7.11	9.69	7.00
16.0	6.85	6.17	7.08	6.31	7.56	6.59	7.74	6.73	8.10	7.00	8.33	7.00	8.57	7.01	9.08	6.97	9.49	6.86
18.0	6.70	6.04	6.94	6.18	7.40	6.45	7.58	6.59	7.93	6.86	8.16	6.86	8.40	6.86	8.89	6.82	9.30	6.72
20.0	6.56	5.91	6.79	6.05	7.25	6.31	7.42	6.45	7.76	6.72	7.99	6.71	8.22	6.72	8.70	6.68	9.10	6.57
21.0	6.49	5.85	6.72	5.99	7.17	6.25	7.34	6.38	7.68	6.64	7.90	6.64	8.13	6.65	8.61	6.61	9.00	6.50
23.0	6.35	5.72	6.57	5.86	7.01	6.11	7.18	6.24	7.51	6.50	7.73	6.50	7.95	6.50	8.42	6.46	8.81	6.36
25.0	6.21	5.60	6.43	5.73	6.86	5.97	7.02	6.10	7.34	6.35	7.56	6.35	7.78	6.36	8.23	6.32	8.61	6.22
27.0	6.07	5.47	6.28	5.60	6.70	5.84	6.86	5.96	7.18	6.21	7.39	6.21	7.60	6.21	8.05	6.18	8.42	6.08
29.0	5.93	5.34	6.13	5.47	6.55	5.70	6.70	5.82	7.01	6.07	7.22	6.06	7.42	6.07	7.86	6.03	8.22	5.94
31.0	5.79	5.21	5.99	5.34	6.39	5.57	6.54	5.69	6.84	5.92	7.04	5.92	7.25	5.92	7.67	5.89	8.03	5.80
33.0	5.64	5.09	5.84	5.21	6.23	5.43	6.38	5.55	6.68	5.78	6.87	5.77	7.07	5.78	7.49	5.75	7.83	5.65
35.0	5.50	4.96	5.69	5.07	6.08	5.30	6.22	5.41	6.51	5.63	6.70	5.63	6.89	5.63	7.30	5.60	7.63	5.51
37.0	5.36	4.83	5.55	4.94	5.92	5.16	6.06	5.27	6.34	5.49	6.53	5.49	6.71	5.49	7.11	5.46	7.44	5.37
39.0	5.22	4.70	5.40	4.81	5.77	5.02	5.90	5.13	6.17	5.34	6.36	5.34	6.54	5.35	6.92	5.31	7.24	5.23
40.0	5.15	4.64	5.33	4.75	5.69	4.96	5.82	5.06	6.09	5.27	6.27	5.27	6.45	5.27	6.83	5.24	7.14	5.16
42.0	5.01	4.51	5.18	4.62	5.53	4.82	5.66	4.92	5.92	5.13	6.10	5.12	6.27	5.13	6.64	5.10	6.95	5.02
43.0	4.94	4.45	5.11	4.55	5.45	4.75	5.58	4.85	5.84	5.05	6.01	5.05	6.18	5.06	6.55	5.03	6.85	4.95
45.0	4.17	3.76	4.31	3.84	4.60	4.01	4.71	4.10	4.93	4.27	5.08	4.26	5.22	4.27	5.53	4.24	5.78	4.18
46.0	4.04	3.64	4.18	3.73	4.46	3.89	4.57	3.97	4.78	4.13	4.92	4.13	5.06	4.14	5.36	4.11	5.60	4.05

2-6-5. Part load performance

Combination

Indoor unit : RAV-HM301KRTP-E/TR

Outdoor unit : RAV-GM301ATP-E/TR, RAV-GM301ATJP-E

	Cooling		Heating	
	Capacity(W)	Power consumption (W)	Capacity(W)	Power consumption (W)
MINIMUM	900	250	800	170
RATING	2500	610	3400	850

Q: Capacity in W
W: Power Consumption in W

Cooling

Outdoor temperature(ºC)		Load(%)									
		100	**90**	**80**	**70**	**60**	**50**	**40**	**30**	**20**	**10**
40	Q	2410	2170	1930	1690	1450	1210	960	870	870	870
	W	670	590	520	470	400	340	280	270	270	270
35	Q	2500	2250	2000	1750	1500	1250	1000	900	900	900
	W	610	540	480	430	370	310	260	250	250	250
30	Q	2600	2340	2080	1820	1560	1300	1040	940	940	940
	W	560	490	440	390	340	280	240	230	230	230
25	Q	2680	2410	2150	1880	1610	1340	1070	970	970	970
	W	500	440	400	350	300	260	210	210	210	210
20	Q	2760	2480	2200	1930	1650	1380	1100	990	990	990
	W	450	400	360	320	270	230	190	190	190	190

Heating

Outdoor temperature(ºC)		Load(%)									
		100	**90**	**80**	**70**	**60**	**50**	**40**	**30**	**20**	**10**
15	Q	4040	3640	3230	2830	2420	2020	1620	1210	950	950
	W	910	770	680	570	470	390	290	200	180	180
10	Q	3670	3300	2930	2570	2200	1830	1470	1100	860	860
	W	870	740	650	550	450	370	280	200	170	170
7	Q	3400	3060	2720	2380	2040	1700	1360	1020	800	800
	W	850	720	630	530	440	360	270	190	170	170
5	Q	2620	2360	2090	1830	1570	1310	1050	790	620	620
	W	730	620	540	450	380	310	230	160	150	150
2	Q	2560	2300	2050	1790	1540	1280	1020	770	600	600
	W	720	610	530	450	370	300	230	160	140	140
0	Q	2520	2270	2020	1760	1510	1260	1010	760	590	590
	W	710	600	530	440	370	300	230	160	140	140
-5	Q	2430	2190	1950	1700	1460	1220	970	730	570	570
	W	700	590	520	430	360	300	220	160	140	140
-7	Q	2390	2150	1910	1680	1440	1200	960	720	560	560
	W	690	580	510	430	360	290	220	150	140	140
-10	Q	2210	1990	1770	1550	1330	1100	880	660	520	520
	W	660	560	490	410	340	280	210	150	130	130
-15	Q	1700	1530	1360	1190	1020	850	680	510	400	400
	W	590	500	440	370	310	250	190	130	120	120

Combination

Indoor unit : RAV-HM401KRTP-E/TR

Outdoor unit : RAV-GM401ATP-E/TR, RAV-GM401ATJP-E

	Cooling		Heating	
	Capacity(W)	Power consumption (W)	Capacity(W)	Power consumption (W)
MINIMUM	900	180	800	140
RATING	3600	1130	4000	1120

Q: Capacity in W
W: Power Consumption in W

Cooling

Outdoor temperature(ºC)		Load(%)									
		100	**90**	**80**	**70**	**60**	**50**	**40**	**30**	**20**	**10**
40	Q	3470	3120	2780	2430	2080	1740	1390	1040	870	870
	W	1230	1090	960	860	740	620	520	430	200	200
35	Q	3600	3240	2880	2520	2160	1800	1440	1080	900	900
	W	1130	1000	880	790	680	570	480	390	180	180
30	Q	3750	3370	3000	2620	2250	1870	1500	1120	940	940
	W	1030	910	800	720	620	520	440	350	160	160
25	Q	3860	3480	3090	2700	2320	1930	1550	1160	970	970
	W	930	820	720	650	560	470	400	320	150	150
20	Q	3970	3570	3170	2780	2380	1980	1590	1190	990	990
	W	840	740	650	590	500	420	360	290	130	130

Heating

Outdoor temperature(ºC)		Load(%)									
		100	**90**	**80**	**70**	**60**	**50**	**40**	**30**	**20**	**10**
15	Q	4750	4280	3800	3330	2850	2380	1900	1430	950	950
	W	1200	1020	890	750	630	500	390	280	150	150
10	Q	4320	3880	3450	3020	2590	2160	1730	1290	860	860
	W	1150	980	850	720	610	480	370	270	140	140
7	Q	4000	3600	3200	2800	2400	2000	1600	1200	800	800
	W	1120	950	830	700	590	470	360	260	140	140
5	Q	3080	2770	2460	2160	1850	1540	1230	920	620	620
	W	960	820	710	600	510	400	310	220	120	120
2	Q	3010	2710	2410	2110	1810	1510	1200	900	600	600
	W	950	800	700	590	500	400	300	220	120	120
0	Q	2970	2670	2370	2080	1780	1480	1190	890	590	590
	W	940	800	700	590	490	390	300	220	120	120
-5	Q	2860	2580	2290	2000	1720	1430	1140	860	570	570
	W	920	780	680	570	480	390	300	210	110	110
-7	Q	2820	2530	2250	1970	1690	1410	1130	840	560	560
	W	910	770	670	570	480	380	290	210	110	110
-10	Q	2600	2340	2080	1820	1560	1300	1040	780	520	520
	W	870	740	650	550	460	370	280	200	110	110
-15	Q	2000	1800	1600	1400	1200	1000	800	600	400	400
	W	780	660	580	490	410	330	250	180	100	100

Combination

Indoor unit : RAV-HM561KRTP-E/TR

Outdoor unit : RAV-GM561ATP-E1/TR1, RAV-GM561ATJP-E1

Operation range		Cooling		Heating	
		Q	P	Q	P
MINIMUM	W	1200	300	1500	300
RATING	W	5000	1660	5300	1550
MAXIMUM	W	5600	1860	6300	2400

Cooling

Outdoor Temperature DB (°C)	Parts Load (%)																			
	100		90		80		70		60		50		40		30		20		10	
	Q	P	Q	P	Q	P	Q	P	Q	P	Q	P	Q	P	Q	P	Q	P	Q	P
10	6604	1065	5944	950	5283	836	4623	721	3963	606	3302	491	2642	376	1981	261	1585	193	1585	193
11	6540	1089	5886	972	5232	854	4578	737	3924	619	3270	502	2616	385	1962	267	1570	197	1570	197
12	6476	1113	5828	993	5181	873	4533	753	3886	633	3238	513	2590	393	1943	273	1554	201	1554	201
13	6412	1137	5771	1014	5129	892	4488	769	3847	646	3206	524	2565	401	1924	279	1539	205	1539	205
14	6348	1160	5713	1035	5078	910	4443	785	3809	660	3174	535	2539	410	1904	285	1523	210	1523	210
15	6283	1184	5655	1056	5027	929	4398	801	3770	674	3142	546	2513	418	1885	291	1508	214	1508	214
16	6219	1208	5597	1078	4975	947	4353	817	3732	687	3110	557	2488	427	1866	296	1493	218	1493	218
17	6155	1232	5540	1099	4924	966	4309	833	3693	701	3078	568	2462	435	1847	302	1477	223	1477	223
18	6091	1256	5482	1120	4873	985	4264	849	3655	714	3045	579	2436	443	1827	308	1462	227	1462	227
19	6027	1279	5424	1141	4821	1003	4219	866	3616	728	3013	590	2411	452	1808	314	1446	231	1446	231
20	5963	1303	5366	1163	4770	1022	4174	882	3578	741	2981	601	2385	460	1789	320	1431	236	1431	236
21	5898	1327	5309	1184	4719	1041	4129	898	3539	755	2949	612	2359	469	1770	326	1416	240	1416	240
22	5834	1351	5251	1205	4667	1059	4084	914	3501	768	2917	623	2334	477	1750	331	1400	244	1400	244
23	5770	1374	5193	1226	4616	1078	4039	930	3462	782	2885	634	2308	485	1731	337	1385	248	1385	248
24	5706	1398	5135	1248	4565	1097	3994	946	3424	795	2853	645	2282	494	1712	343	1369	253	1369	253
25	5642	1422	5078	1269	4513	1115	3949	962	3385	809	2821	656	2257	502	1693	349	1354	257	1354	257
26	5578	1446	5020	1290	4462	1134	3904	978	3347	822	2789	667	2231	511	1673	355	1339	261	1339	261
27	5513	1470	4962	1311	4411	1153	3859	994	3308	836	2757	678	2205	519	1654	361	1323	266	1323	266
28	5449	1493	4904	1332	4359	1171	3814	1010	3270	849	2725	688	2180	527	1635	366	1308	270	1308	270
29	5385	1517	4847	1354	4308	1190	3770	1027	3231	863	2693	699	2154	536	1616	372	1292	274	1292	274
30	5321	1541	4789	1375	4257	1209	3725	1043	3193	877	2660	710	2128	544	1596	378	1277	279	1277	279
31	5257	1565	4731	1396	4205	1227	3680	1059	3154	890	2628	721	2103	553	1577	384	1262	283	1262	283
32	5193	1589	4673	1417	4154	1246	3635	1075	3116	904	2596	732	2077	561	1558	390	1246	287	1246	287
33	5128	1612	4616	1439	4103	1265	3590	1091	3077	917	2564	743	2051	570	1539	396	1231	291	1231	291
34	5064	1636	4558	1460	4051	1283	3545	1107	3039	931	2532	754	2026	578	1519	402	1215	296	1215	296
35	**5000**	**1660**	**4500**	**1481**	**4000**	**1302**	**3500**	**1123**	**3000**	**944**	**2500**	**765**	**2000**	**586**	**1500**	**407**	**1200**	**300**	**1200**	**300**
36	4936	1684	4442	1502	3949	1321	3455	1139	2962	958	2468	776	1974	595	1481	413	1185	304	1185	304
37	4872	1708	4385	1524	3897	1339	3410	1155	2923	971	2436	787	1949	603	1462	419	1169	309	1169	309
38	4808	1731	4327	1545	3846	1358	3365	1171	2885	985	2404	798	1923	612	1442	425	1154	313	1154	313
39	4743	1755	4269	1566	3795	1377	3320	1188	2846	998	2372	809	1897	620	1423	431	1138	317	1138	317
40	3827	1495	3444	1334	3061	1172	2679	1011	2296	850	1913	689	1531	528	1148	367	918	270	918	270
41	3691	1495	3322	1334	2953	1172	2584	1011	2215	850	1846	689	1476	528	1107	367	886	270	886	270
42	3555	1495	3200	1334	2844	1172	2489	1011	2133	850	1778	689	1422	528	1067	367	853	270	853	270
43	3420	1495	3078	1334	2736	1172	2394	1011	2052	850	1710	689	1368	528	1026	367	821	270	821	270
44	3284	1495	2956	1334	2628	1172	2299	1011	1971	850	1642	689	1314	528	985	367	788	270	788	270
45	2145	1160	1930	1035	1716	910	1501	785	1287	660	1072	535	858	410	643	285	515	210	515	210
46	2009	1160	1808	1035	1607	910	1407	785	1206	660	1005	535	804	410	603	285	482	210	482	210

Heating

Outdoor Temperature DB (°C)	Parts Load (%)																			
	100		90		80		70		60		50		40		30		20		10	
	Q	P	Q	P	Q	P	Q	P	Q	P	Q	P	Q	P	Q	P	Q	P	Q	P
-15	2736	572	2462	507	2189	443	1915	379	1642	314	1368	250	1094	186	821	122	774	111	774	111
-14	2794	614	2515	545	2235	476	1956	407	1676	338	1397	269	1118	200	838	131	791	119	791	119
-13	2852	657	2567	583	2282	509	1996	435	1711	362	1426	288	1141	214	856	140	807	127	807	127
-12	2910	700	2619	621	2328	543	2037	464	1746	385	1455	306	1164	228	873	149	824	136	824	136
-11	2968	743	2671	659	2375	576	2078	492	1781	409	1484	325	1187	242	890	158	840	144	840	144
-10	3026	786	2724	697	2421	609	2118	521	1816	432	1513	344	1211	256	908	167	856	152	856	152
-9	3084	829	2776	736	2467	642	2159	549	1851	456	1542	363	1234	269	925	176	873	160	873	160
-8	3142	872	2828	774	2514	676	2200	577	1885	479	1571	381	1257	283	943	185	889	169	889	169
-7	3200	914	2880	812	2560	709	2240	606	1920	503	1600	400	1280	297	960	194	906	177	906	177
-6	3272	965	2944	857	2617	748	2290	640	1963	531	1636	422	1309	314	981	205	926	187	926	187
-5	3343	1016	3008	902	2674	787	2340	673	2006	559	1671	445	1337	330	1003	216	946	197	946	197
-4	3414	1067	3072	947	2731	827	2390	707	2048	587	1707	467	1366	347	1024	227	966	206	966	206
-3	3485	1118	3136	992	2788	866	2439	741	2091	615	1742	489	1394	363	1045	238	986	216	986	216
-2	3556	1168	3200	1037	2845	906	2489	774	2134	643	1778	511	1422	380	1067	248	1006	226	1006	226
-1	3627	1219	3264	1082	2902	945	2539	808	2176	671	1814	534	1451	396	1088	259	1027	236	1027	236
0	3698	1270	3329	1127	2959	984	2589	842	2219	699	1849	556	1479	413	1110	270	1047	246	1047	246
1	3769	1321	3393	1172	3016	1024	2639	875	2262	727	1885	578	1508	429	1131	281	1067	256	1067	256
2	3841	1372	3457	1217	3072	1063	2688	909	2304	755	1920	600	1536	446	1152	292	1087	265	1087	265
3	3903	1390	3513	1234	3123	1077	2732	921	2342	765	1952	608	1561	452	1171	296	1105	269	1105	269
4	3966	1409	3570	1250	3173	1092	2776	933	2380	775	1983	616	1587	458	1190	300	1123	273	1123	273
5	4029	1427	3626	1267	3223	1106	2821	945	2418	785	2015	624	1612	464	1209	303	1140	276	1140	276
6	5163	1526	4647	1354	4131	1183	3614	1011	3098	839	2582	668	2065	496	1549	325	1461	295	1461	295
7	**5300**	**1550**	**4770**	**1376**	**4240**	**1201**	**3710**	**1027**	**3180**	**853**	**2650**	**678**	**2120**	**504**	**1590**	**330**	**1500**	**300**	**1500**	**300**
8	5437	1574	4893	1397	4349	1220	3806	1043	3262	866	2718	689	2175	512	1631	335	1539	305	1539	305
9	5574	1598	5016	1418	4459	1239	3901	1059	3344	879	2787	699	2229	520	1672	340	1577	309	1577	309
10	5710	1622	5139	1440	4568	1257	3997	1075	3426	892	2855	710	2284	527	1713	345	1616	314	1616	314
11	5847	1646	5262	1461	4678	1276	4093	1091	3508	905	2924	720	2339	535	1754	350	1655	319	1655	319
12	5984	1670	5385	1482	4787	1294	4189	1106	3590	919	2992	731	2394	543	1795	355	1694	323	1694	323
13	6121	1694	5509	1503	4897	1313	4284	1122	3672	932	3060	741	2448	551	1836	360	1732	328	1732	328
14	6257	1718	5632	1525	5006	1332	4380	1138	3754	945	3129	752	2503	559	1877	365	1771	333	1771	333
15	6394	1742	5755	1546	5115	1350	4476	1154	3837	958	3197	762	2558	566	1918	370	1810	337	1810	337
16	6531	1766	5878	1567	5225	1369	4572	1170	3919	971	3265	773	2612	574	1959	376	1848	342	1848	342
17	6668	1790	6001	1589	5334	1387	4667	1186	4001	985	3334	783	2667	582	2000	381	1887	346	1887	346
18	6805	1814	6124	1610	5444	1406	4763	1202	4083	998	3402	794	2722	590	2041	386	1926	351	1926	351
19	6941	1838	6247	1631	5553	1425	4859	1218	4165	1011	3471	804	2777	598	2082	391	1965	356	1965	356
20	7078	1862	6370	1653	5662	1443	4955	1234	4247	1024	3539	815	2831	605	2123	396	2003	360	2003	360
21	7215	1886	6493	1674	5772	1462	5050	1250	4329	1037	3607	825	2886	613	2164	401	2042	365	2042	365
22	7352	1910	6616	1695	5881	1480	5146	1265	4411	1051	3676	836	2941	621	2205	406	2081	370	2081	370
23	7488	1934	6740	1716	5991	1499	5242	1281	4493	1064	3744	846	2995	629	2247	411	2119	374	2119	374
24	7625	1958	6863	1738	6100	1518	5338	1297	4575	1077	3813	857	3050	637	2288	416	2158	379	2158	379

Combination

Indoor unit : RAV-HM801KRTP-E/TR

Outdoor unit : RAV-GM801ATP-E/TR, RAV-GM801ATJP-E

	Cooling		Heating	
	Capacity(W)	Power consumption (W)	Capacity(W)	Power consumption (W)
MINIMUM	1500	310	1500	310
RATING	6700	2440	7700	2610

Q: Capacity in W
W: Power Consumption in W

Cooling

Outdoor temperature(ºC)		Load(%)									
		100	**90**	**80**	**70**	**60**	**50**	**40**	**30**	**20**	**10**
40	Q	6460	5810	5170	4520	3880	3230	2580	1940	1450	1450
	W	2660	2170	1700	1310	980	740	580	440	340	340
35	Q	6700	6030	5360	4690	4020	3350	2680	2010	1500	1500
	W	2440	1990	1560	1200	900	680	530	400	310	310
30	Q	6970	6270	5580	4880	4180	3490	2790	2090	1560	1560
	W	2220	1810	1420	1090	820	620	480	360	280	280
25	Q	7190	6470	5750	5030	4310	3590	2880	2160	1610	1610
	W	2010	1640	1290	990	740	560	440	330	260	260
20	Q	7390	6650	5910	5170	4430	3690	2950	2220	1650	1650
	W	1810	1480	1160	890	670	500	390	300	230	230

Heating

Outdoor temperature(ºC)		Load(%)									
		100	**90**	**80**	**70**	**60**	**50**	**40**	**30**	**20**	**10**
15	Q	9150	8230	7320	6400	5490	4570	3660	2740	1830	1780
	W	2800	2370	1950	1590	1220	970	720	540	360	330
10	Q	8310	7480	6650	5810	4980	4150	3320	2490	1660	1620
	W	2690	2270	1870	1520	1170	930	690	510	350	320
7	Q	7700	6930	6160	5390	4620	3850	3080	2310	1540	1500
	W	2610	2210	1820	1480	1140	900	670	500	340	310
5	Q	5930	5340	4740	4150	3560	2960	2370	1780	1190	1150
	W	2240	1900	1560	1270	980	770	570	430	290	270
2	Q	5800	5220	4640	4060	3480	2900	2320	1740	1160	1130
	W	2210	1870	1540	1250	960	760	570	420	290	260
0	Q	5710	5140	4570	4000	3430	2850	2280	1710	1140	1110
	W	2190	1850	1530	1240	960	760	560	420	290	260
-5	Q	5510	4960	4410	3860	3300	2750	2200	1650	1100	1070
	W	2140	1810	1490	1210	930	740	550	410	280	250
-7	Q	5420	4880	4340	3790	3250	2710	2170	1630	1080	1060
	W	2120	1790	1480	1200	920	730	540	410	280	250
-10	Q	5000	4500	4000	3500	3000	2500	2000	1500	1000	970
	W	2040	1730	1420	1160	890	700	520	390	270	240
-15	Q	3850	3470	3080	2700	2310	1930	1540	1160	770	750
	W	1820	1540	1270	1030	790	630	470	350	240	220

Combination <Cooling only>

Indoor : **RAV-HM561KRSP-E/TR**

Outdoor : **RAV-GM561ATP-E1/TR1, RAV-GM561ATJP-E1**

Operation range		Cooling Q	Cooling P
MINIMUM	W	1500	300
RATING	W	5000	1615
MAXIMUM	W	5600	1860

Cooling

Outdoor Temperature DB (°C)	Parts Load (%) 100 Q	100 P	90 Q	90 P	80 Q	80 P	70 Q	70 P	60 Q	60 P	50 Q	50 P	40 Q	40 P	30 Q	30 P	20 Q	20 P	10 Q	10 P
20	5963	1268	5366	1120	4770	973	4174	825	3578	678	2981	530	2385	383	1789	236	1789	236	1789	236
21	5898	1291	5309	1141	4719	991	4129	840	3539	690	2949	540	2359	390	1770	240	1770	240	1770	240
22	5834	1314	5251	1161	4667	1008	4084	856	3501	703	2917	550	2334	397	1750	244	1750	244	1750	244
23	5770	1337	5193	1182	4616	1026	4039	871	3462	715	2885	559	2308	404	1731	248	1731	248	1731	248
24	5706	1360	5135	1202	4565	1044	3994	886	3424	727	2853	569	2282	411	1712	253	1712	253	1712	253
25	5642	1384	5078	1223	4513	1062	3949	901	3385	740	2821	579	2257	418	1693	257	1693	257	1693	257
26	5578	1407	5020	1243	4462	1079	3904	916	3347	752	2789	589	2231	425	1673	261	1673	261	1673	261
27	5513	1430	4962	1263	4411	1097	3859	931	3308	765	2757	598	2205	432	1654	266	1654	266	1654	266
28	5449	1453	4904	1284	4359	1115	3814	946	3270	777	2725	608	2180	439	1635	270	1635	270	1635	270
29	5385	1476	4847	1304	4308	1133	3770	961	3231	789	2693	618	2154	446	1616	274	1616	274	1616	274
30	5321	1499	4789	1325	4257	1150	3725	976	3193	802	2660	627	2128	453	1596	279	1596	279	1596	279
31	5257	1522	4731	1345	4205	1168	3680	991	3154	814	2628	637	2103	460	1577	283	1577	283	1577	283
32	5193	1546	4673	1366	4154	1186	3635	1006	3116	826	2596	647	2077	467	1558	287	1558	287	1558	287
33	5128	1569	4616	1386	4103	1204	3590	1021	3077	839	2564	656	2051	474	1539	291	1539	291	1539	291
34	5064	1592	4558	1407	4051	1222	3545	1036	3039	851	2532	666	2026	481	1519	296	1519	296	1519	296
35	**5000**	**1615**	**4500**	**1427**	**4000**	**1239**	**3500**	**1051**	**3000**	**864**	**2500**	**676**	**2000**	**488**	**1500**	**300**	**1500**	**300**	**1500**	**300**
36	4936	1638	4442	1448	3949	1257	3455	1066	2962	876	2468	685	1974	495	1481	304	1481	304	1481	304
37	4872	1661	4385	1468	3897	1275	3410	1082	2923	888	2436	695	1949	502	1462	309	1462	309	1462	309
38	4808	1684	4327	1489	3846	1293	3365	1097	2885	901	2404	705	1923	509	1442	313	1442	313	1442	313
39	4743	1708	4269	1509	3795	1310	3320	1112	2846	913	2372	714	1897	516	1423	317	1423	317	1423	317
40	3942	1430	3548	1263	3154	1097	2759	931	2365	765	1971	598	1577	432	1183	266	1183	266	1183	266
41	3821	1430	3439	1263	3057	1097	2675	931	2293	765	1911	598	1529	432	1146	266	1146	266	1146	266
42	3700	1430	3330	1263	2960	1097	2590	931	2220	765	1850	598	1480	432	1110	266	1110	266	1110	266
43	3580	1430	3222	1263	2864	1097	2506	931	2148	765	1790	598	1432	432	1074	266	1074	266	1074	266
44	3459	1430	3113	1263	2767	1097	2421	931	2075	765	1729	598	1383	432	1038	266	1038	266	1038	266
45	2554	1110	2299	981	2043	852	1788	722	1532	593	1277	464	1022	335	766	206	766	206	766	206
46	2433	1110	2190	981	1946	852	1703	722	1460	593	1217	464	973	335	730	206	730	206	730	206

Combination <Cooling only>

Indoor : **RAV-HM801KSRP-E/TR**

Outdoor : **RAV-GM801ATP-E/TR, RAV-GM801ATJP-E/TR**

Operation range		Cooling	
		Q	P
MINIMUM	W	1500	310
RATING	W	6700	2250
MAXIMUM	W	8000	2850

Cooling

Outdoor Temperature DB (°C)	Parts Load (%)																			
	100		90		80		70		60		50		40		30		20		10	
	Q	P	Q	P	Q	P	Q	P	Q	P	Q	P	Q	P	Q	P	Q	P	Q	P
20	7990	1766	7191	1570	6392	1374	5593	1178	4794	981	3995	785	3196	589	2397	393	1789	243	1789	243
21	7904	1799	7113	1599	6323	1399	5533	1199	4742	999	3952	799	3162	600	2371	400	1770	248	1770	248
22	7818	1831	7036	1627	6254	1424	5472	1221	4691	1017	3909	814	3127	610	2345	407	1750	252	1750	252
23	7732	1863	6959	1656	6185	1449	5412	1242	4639	1035	3866	828	3093	621	2320	414	1731	257	1731	257
24	7646	1895	6881	1685	6117	1474	5352	1264	4587	1053	3823	842	3058	632	2294	421	1712	261	1712	261
25	7560	1928	6804	1713	6048	1499	5292	1285	4536	1071	3780	857	3024	643	2268	429	1693	266	1693	266
26	7474	1960	6726	1742	5979	1524	5232	1307	4484	1089	3737	871	2990	653	2242	436	1673	270	1673	270
27	7388	1992	6649	1771	5910	1549	5172	1328	4433	1107	3694	886	2955	664	2216	443	1654	274	1654	274
28	7302	2024	6572	1799	5842	1574	5111	1350	4381	1125	3651	900	2921	675	2191	450	1635	279	1635	279
29	7216	2057	6494	1828	5773	1600	5051	1371	4330	1143	3608	914	2886	686	2165	457	1616	283	1616	283
30	7130	2089	6417	1857	5704	1625	4991	1393	4278	1161	3565	929	2852	696	2139	464	1596	288	1596	288
31	7044	2121	6340	1885	5635	1650	4931	1414	4226	1178	3522	943	2818	707	2113	472	1577	292	1577	292
32	6958	2153	6262	1914	5566	1675	4871	1436	4175	1196	3479	957	2783	718	2087	479	1558	297	1558	297
33	6872	2186	6185	1943	5498	1700	4810	1457	4123	1214	3436	972	2749	729	2062	486	1539	301	1539	301
34	6786	2218	6107	1971	5429	1725	4750	1479	4072	1232	3393	986	2714	739	2036	493	1519	306	1519	306
35	**6700**	**2250**	**6030**	**2000**	**5360**	**1750**	**4690**	**1500**	**4020**	**1250**	**3350**	**1000**	**2680**	**750**	**2010**	**500**	**1500**	**310**	**1500**	**310**
36	6614	2282	5953	2029	5291	1775	4630	1522	3968	1268	3307	1015	2646	761	1984	507	1481	314	1481	314
37	6528	2315	5875	2057	5222	1800	4570	1543	3917	1286	3264	1029	2611	772	1958	515	1462	319	1462	319
38	6442	2347	5798	2086	5154	1825	4509	1565	3865	1304	3221	1043	2577	782	1933	522	1442	323	1442	323
39	6356	2379	5720	2115	5085	1850	4449	1586	3814	1322	3178	1058	2542	793	1907	529	1423	328	1423	328
40	6270	2411	5643	2143	5016	1875	4389	1608	3762	1340	3135	1072	2508	804	1881	536	1404	332	1404	332
41	6184	2444	5566	2172	4947	1901	4329	1629	3710	1358	3092	1086	2474	815	1855	543	1385	337	1385	337
42	6098	2476	5488	2201	4878	1926	4269	1651	3659	1376	3049	1101	2439	826	1829	550	1365	341	1365	341
43	6012	2508	5411	2229	4810	1951	4208	1672	3607	1394	3006	1115	2405	836	1804	558	1346	346	1346	346
44	5878	2518	5290	2238	4703	1959	4115	1679	3527	1399	2939	1119	2351	840	1763	560	1316	347	1316	347
45	5075	2219	4568	1973	4060	1726	3553	1480	3045	1233	2538	987	2030	740	1523	493	1136	306	1136	306
46	4919	2219	4427	1973	3935	1726	3443	1480	2952	1233	2460	987	1968	740	1476	493	1101	306	1101	306

Combination

Indoor unit : RAV-HM561KRTP-E/TR x 2 (Twin system)

Outdoor unit : RAV-GM1101ATP-E/TR, RAV-GM1101ATJP-E

	Cooling		Heating	
	Capacity(W)	Power consumption (W)	Capacity(W)	Power consumption (W)
MINIMUM	3000	600	3000	600
RATING	9500	2980	11200	2990

Q: Capacity in W
W: Power Consumption in W

Cooling

Outdoor temperature(ºC)		Load(%)									
		100	**90**	**80**	**70**	**60**	**50**	**40**	**30**	**20**	**10**
40	Q	9160	8240	7330	6410	5500	4580	3660	2890	2890	2890
	W	3250	2610	2070	1650	1310	1000	760	650	650	650
35	Q	9500	8550	7600	6650	5700	4750	3800	3000	3000	3000
	W	2980	2390	1900	1510	1200	920	700	600	600	600
30	Q	9880	8890	7910	6920	5930	4940	3950	3120	3120	3120
	W	2710	2170	1730	1370	1090	840	640	550	550	550
25	Q	10190	9170	8160	7140	6120	5100	4080	3220	3220	3220
	W	2450	1970	1570	1240	990	760	580	490	490	490
20	Q	10470	9420	8380	7330	6280	5240	4190	3310	3310	3310
	W	2210	1770	1410	1120	890	680	520	450	450	450

Heating

Outdoor temperature(ºC)		Load(%)									
		100	**90**	**80**	**70**	**60**	**50**	**40**	**30**	**20**	**10**
15	Q	13310	11980	10650	9310	7980	6650	5320	3990	3560	3560
	W	3210	2710	2240	1810	1410	1110	830	610	640	640
10	Q	12080	10870	9670	8460	7250	6040	4830	3620	3240	3240
	W	3080	2600	2150	1740	1350	1060	790	590	620	620
7	Q	11200	10080	8960	7840	6720	5600	4480	3360	3000	3000
	W	2990	2530	2090	1690	1310	1030	770	570	600	600
5	Q	8620	7760	6900	6040	5170	4310	3450	2590	2310	2310
	W	2570	2170	1790	1450	1120	880	660	490	510	510
2	Q	8430	7590	6750	5900	5060	4220	3370	2530	2260	2260
	W	2530	2140	1770	1430	1110	870	650	480	510	510
0	Q	8310	7470	6640	5810	4980	4150	3320	2490	2220	2220
	W	2510	2120	1750	1420	1100	860	650	480	500	500
-5	Q	8010	7210	6410	5610	4810	4010	3200	2400	2150	2150
	W	2450	2070	1710	1390	1070	840	630	470	490	490
-7	Q	7880	7090	6310	5520	4730	3940	3150	2360	2110	2110
	W	2420	2050	1690	1370	1060	830	620	460	490	490
-10	Q	7280	6550	5820	5090	4370	3640	2910	2180	1950	1950
	W	2340	1980	1630	1320	1020	800	600	450	470	470
-15	Q	5600	5040	4480	3920	3360	2800	2240	1680	1500	1500
	W	2080	1760	1460	1180	910	720	540	400	420	420

Combination

Indoor unit : RAV-HM801KRTP-E/TR x 2 (Twin system)

Outdoor unit : RAV-GM1401ATP-E/TR, RAV-GM1401ATJP-E

	Cooling		Heating	
	Capacity(W)	Power consumption (W)	Capacity(W)	Power consumption (W)
MINIMUM	3000	600	3000	600
RATING	12100	4710	13000	3860

Q: Capacity in W
W: Power Consumption in W

Cooling

Outdoor temperature(ºC)		Load(%)									
		100	**90**	**80**	**70**	**60**	**50**	**40**	**30**	**20**	**10**
40	Q	11670	10500	9330	8170	7000	5830	4670	3500	2890	2890
	W	5130	4190	3280	2530	1900	1430	1110	840	650	650
35	Q	12100	10890	9680	8470	7260	6050	4840	3630	3000	3000
	W	4710	3840	3010	2320	1740	1310	1020	770	600	600
30	Q	12590	11330	10070	8810	7550	6290	5040	3780	3120	3120
	W	4290	3490	2740	2110	1580	1190	930	700	550	550
25	Q	12980	11690	10390	9090	7790	6490	5190	3900	3220	3220
	W	3880	3160	2480	1910	1430	1080	840	630	490	490
20	Q	13340	12000	10670	9340	8000	6670	5340	4000	3310	3310
	W	3490	2850	2230	1720	1290	970	760	570	450	450

Heating

Outdoor temperature(ºC)		Load(%)									
		100	**90**	**80**	**70**	**60**	**50**	**40**	**30**	**20**	**10**
15	Q	15450	13900	12360	10810	9270	7720	6180	4630	3560	3560
	W	4140	3510	2900	2340	1810	1420	1060	780	640	640
10	Q	14020	12620	11220	9820	8410	7010	5610	4210	3240	3240
	W	3970	3360	2780	2240	1740	1360	1020	750	620	620
7	Q	13000	11700	10400	9100	7800	6500	5200	3900	3000	3000
	W	3860	3270	2700	2180	1690	1320	990	730	600	600
5	Q	10010	9010	8010	7010	6010	5000	4000	3000	2310	2310
	W	3310	2810	2320	1870	1450	1130	850	630	510	510
2	Q	9790	8810	7830	6850	5870	4890	3920	2940	2260	2260
	W	3270	2770	2280	1840	1430	1120	840	620	510	510
0	Q	9640	8680	7710	6750	5780	4820	3860	2890	2220	2220
	W	3240	2740	2270	1830	1420	1110	830	610	500	500
-5	Q	9300	8370	7440	6510	5580	4650	3720	2790	2150	2150
	W	3160	2680	2210	1790	1390	1080	810	600	490	490
-7	Q	9150	8230	7320	6400	5490	4570	3660	2740	2110	2110
	W	3130	2650	2190	1770	1370	1070	800	590	490	490
-10	Q	8450	7600	6760	5910	5070	4220	3380	2530	1950	1950
	W	3020	2550	2110	1700	1320	1030	770	570	470	470
-15	Q	6500	5850	5200	4550	3900	3250	2600	1950	1500	1500
	W	2690	2280	1880	1520	1180	920	690	510	420	420

2-6-6. Air Throw Distance Chart

RAV-HM301KRTP-E/TR

Cooling

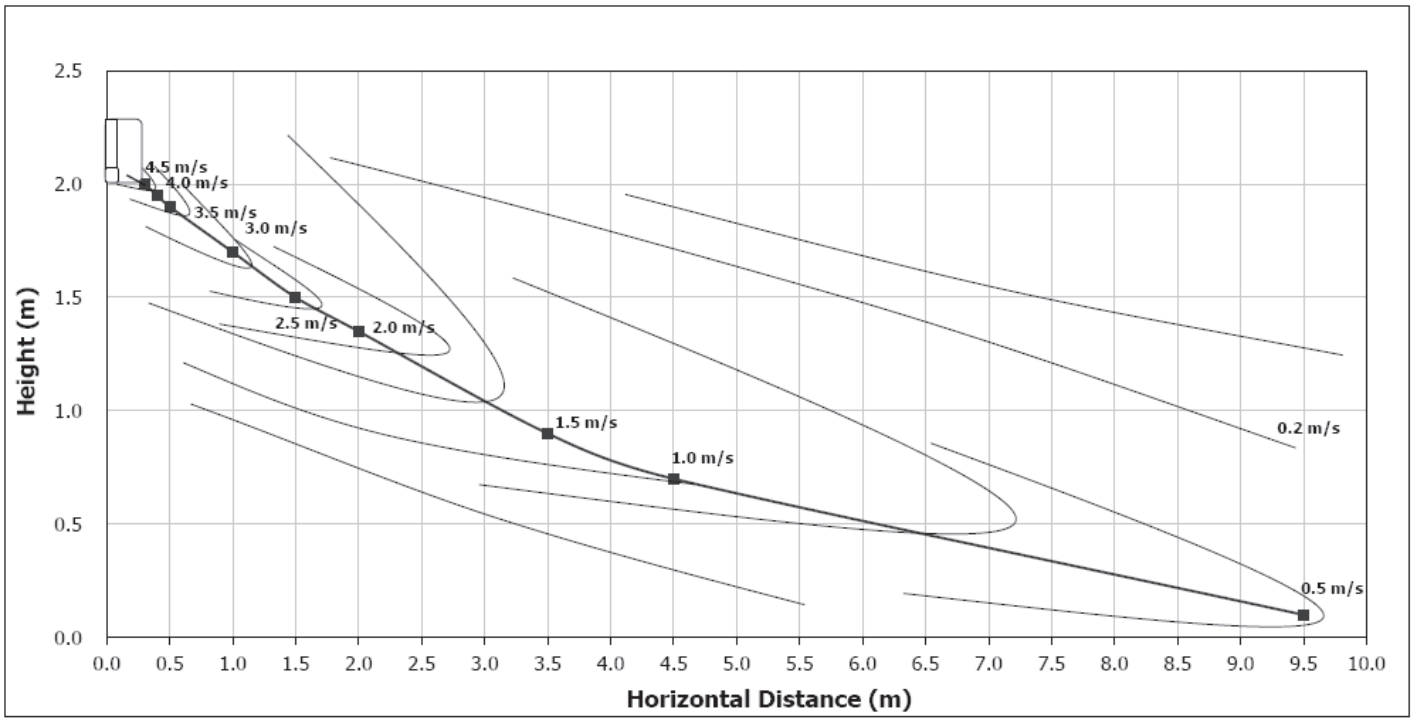

Heating

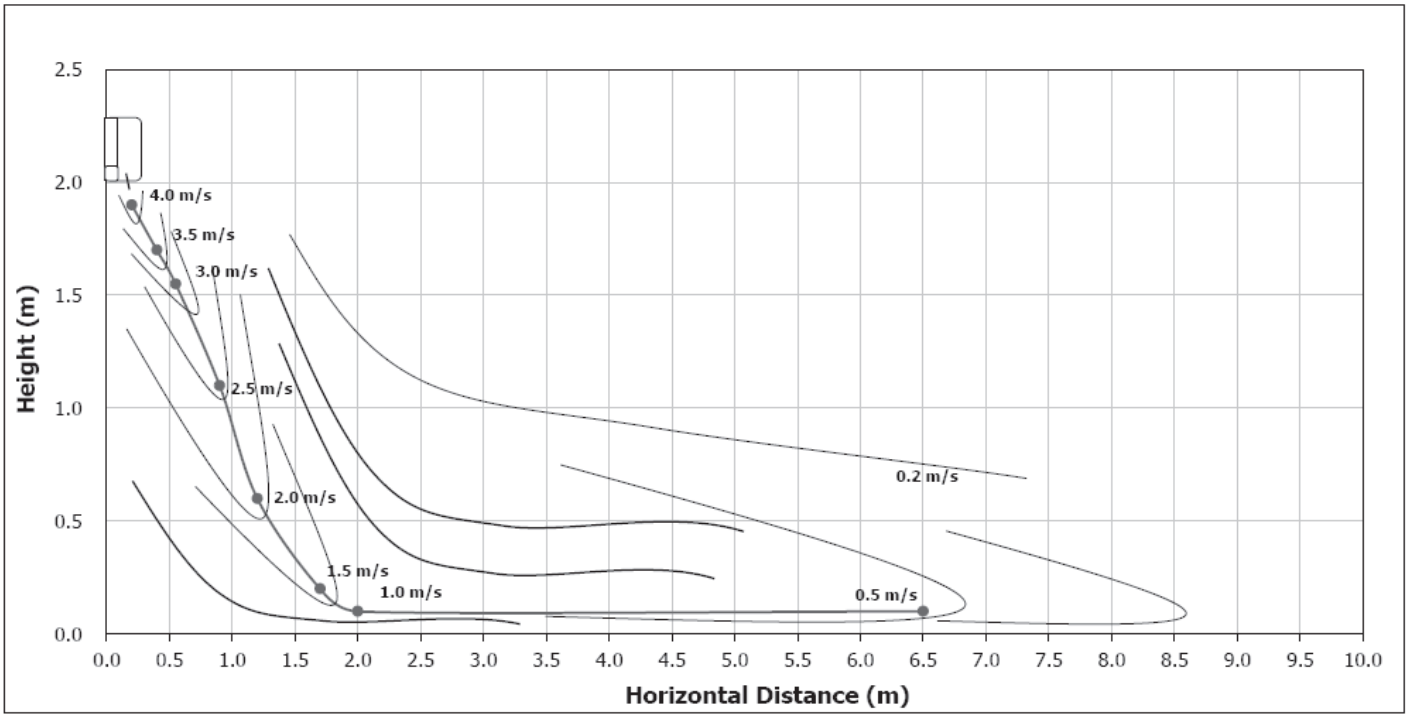

RAV-HM401KRTP-E/TR

Cooling

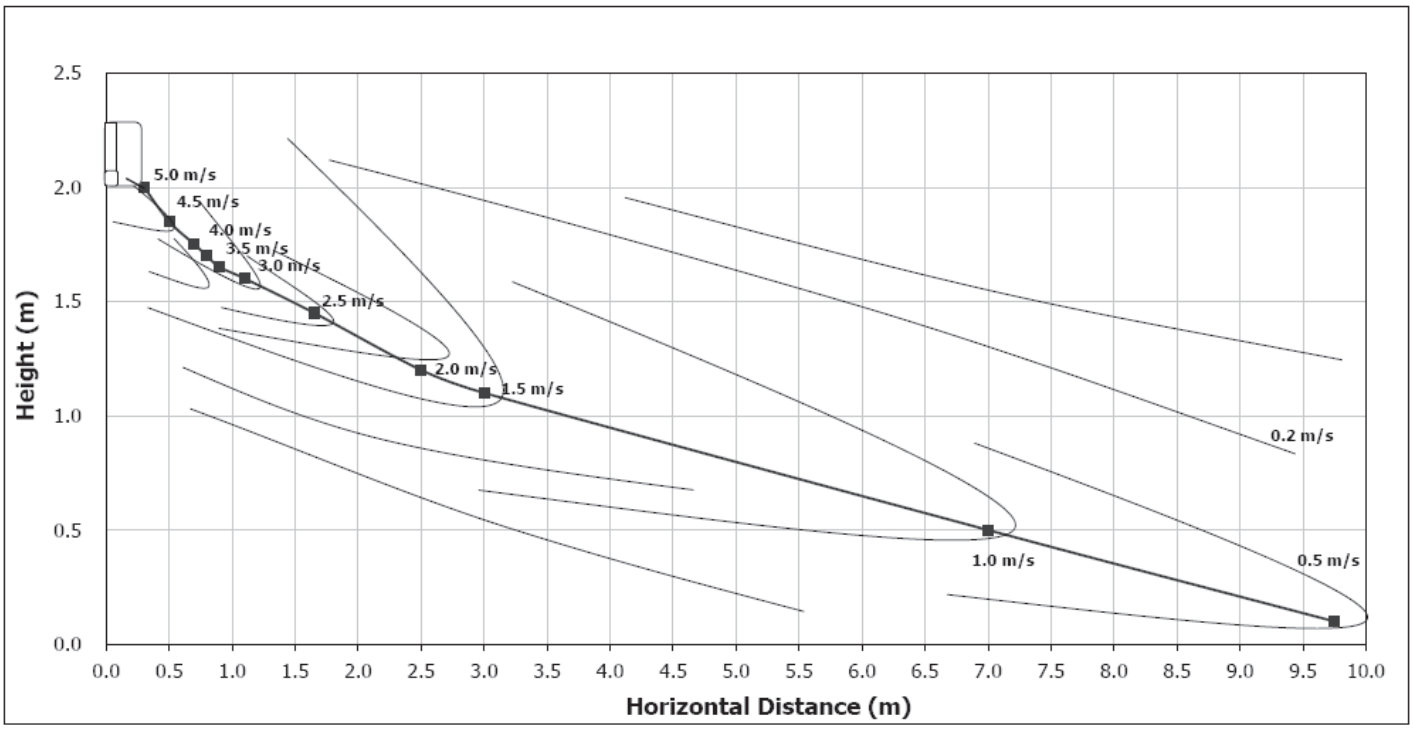

Heating

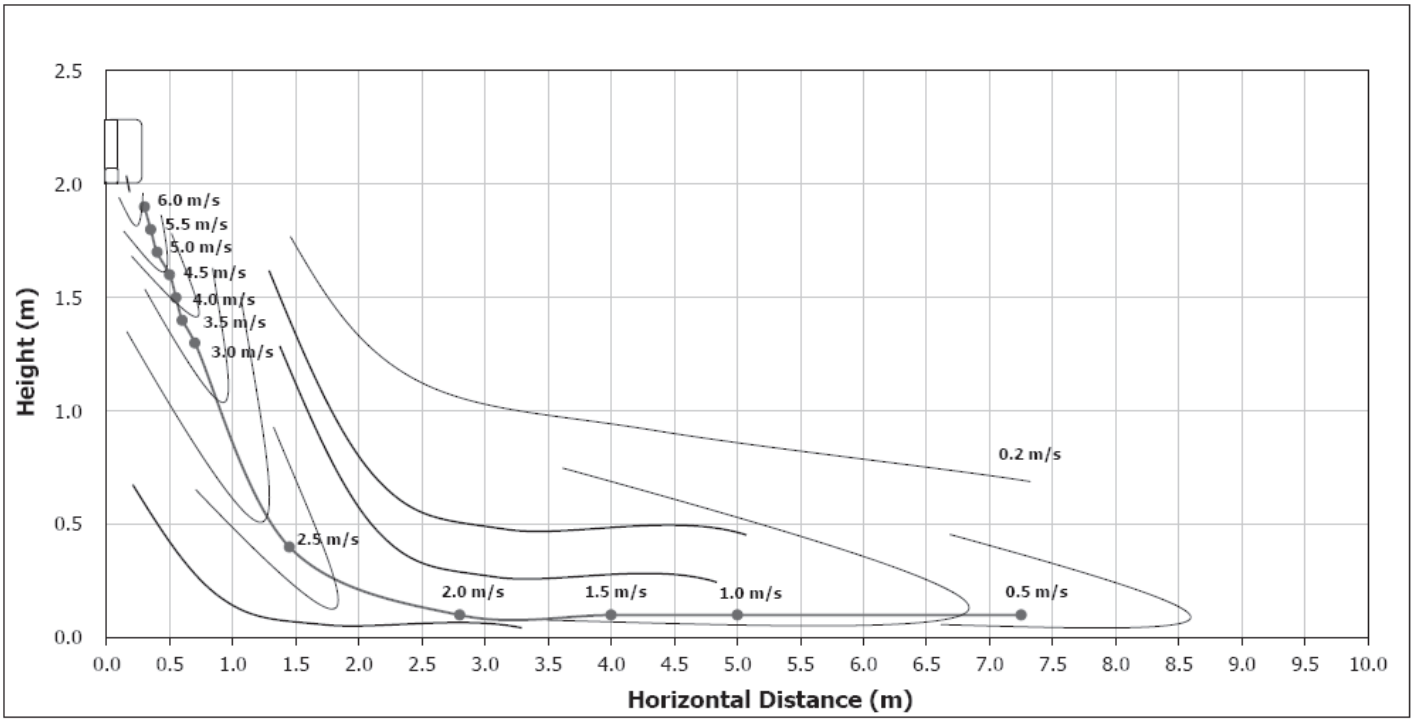

RAV-HM561KRTP-E/TR

Cooling

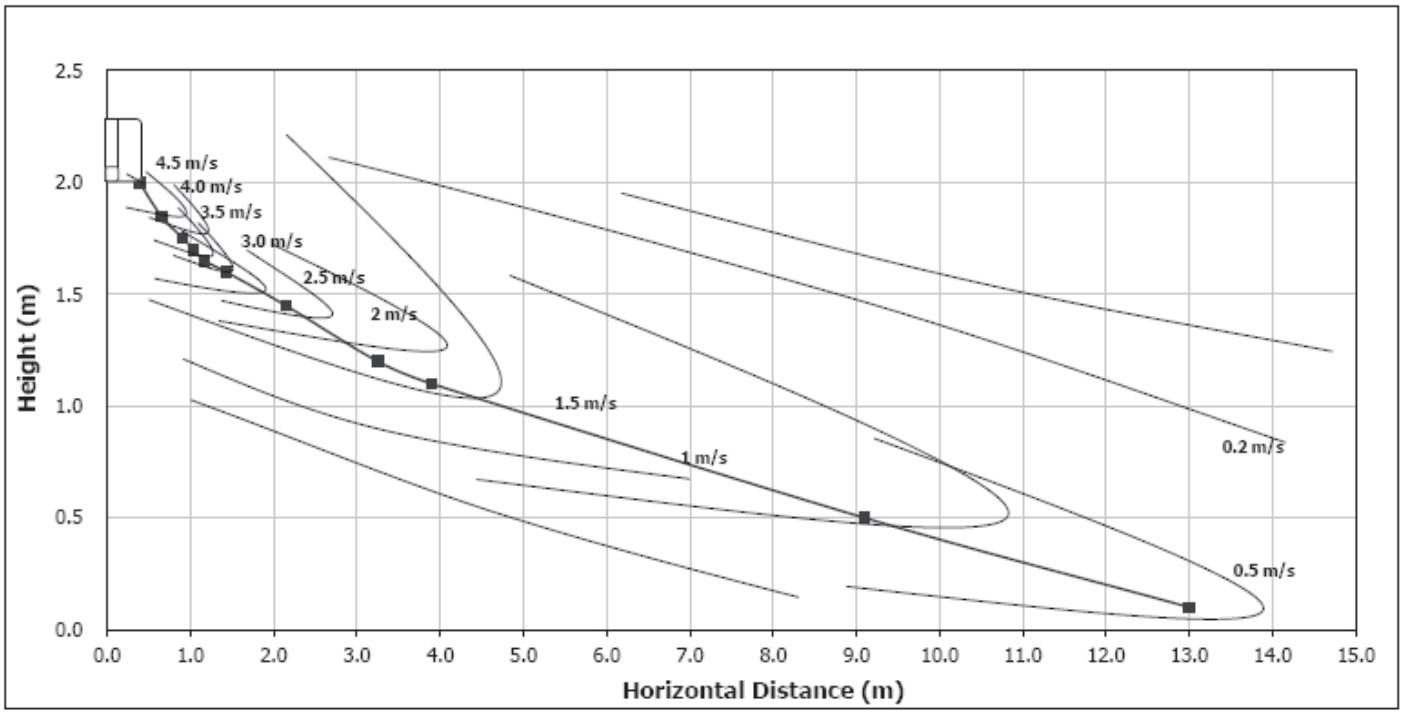

Heating

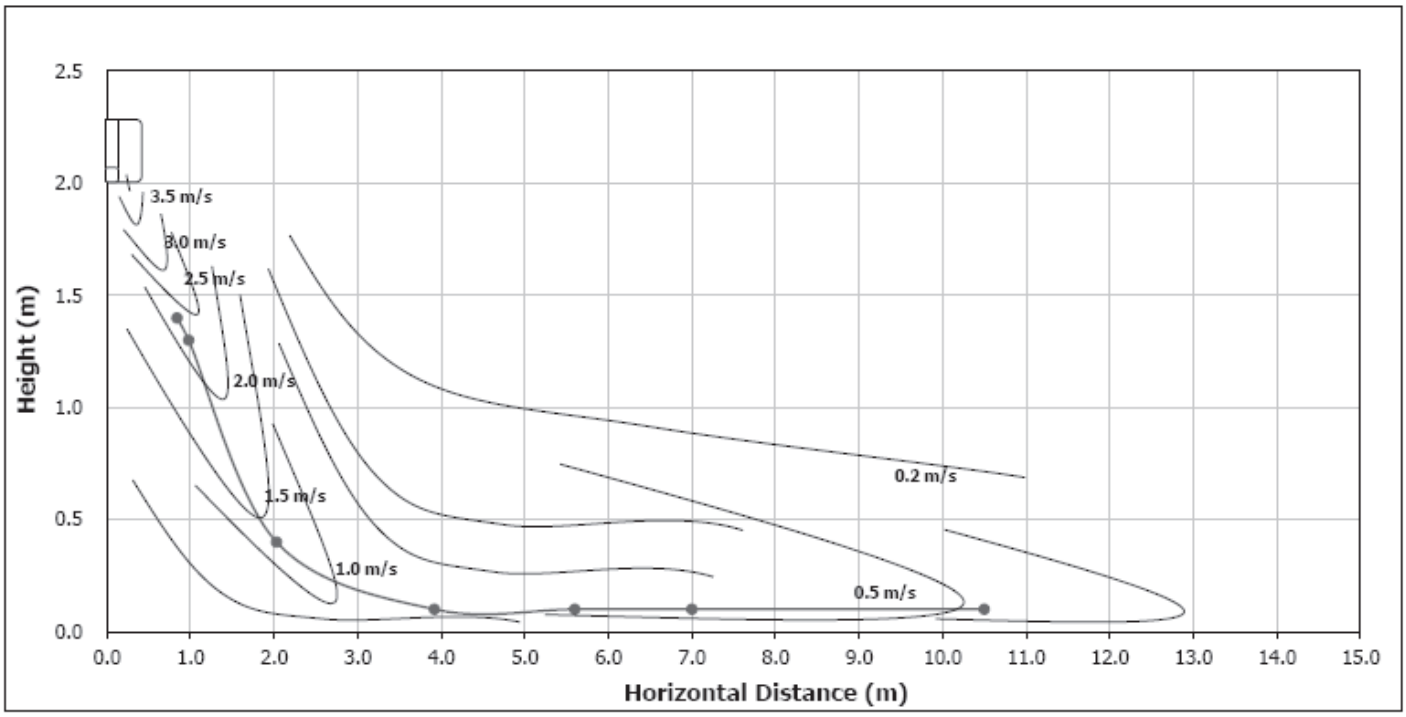

RAV-HM801KRTP-E/TR

Cooling

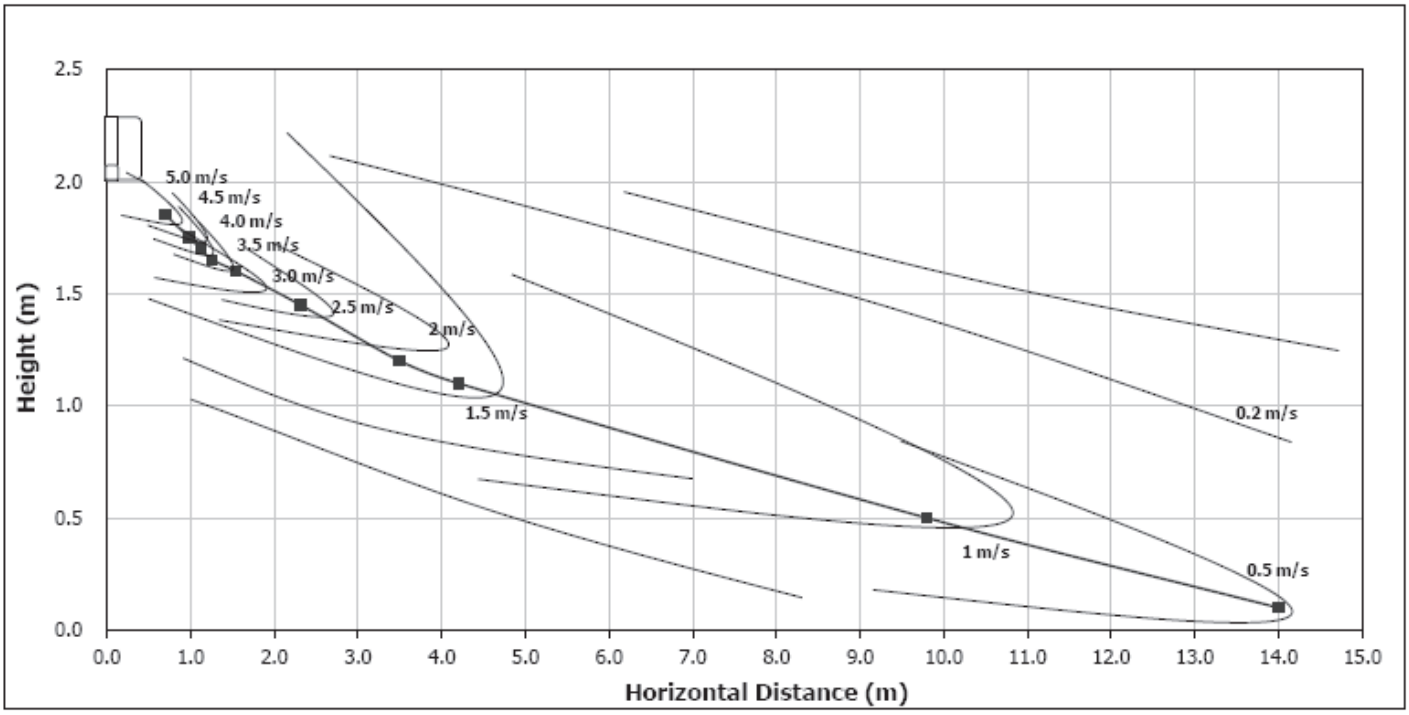

Heating

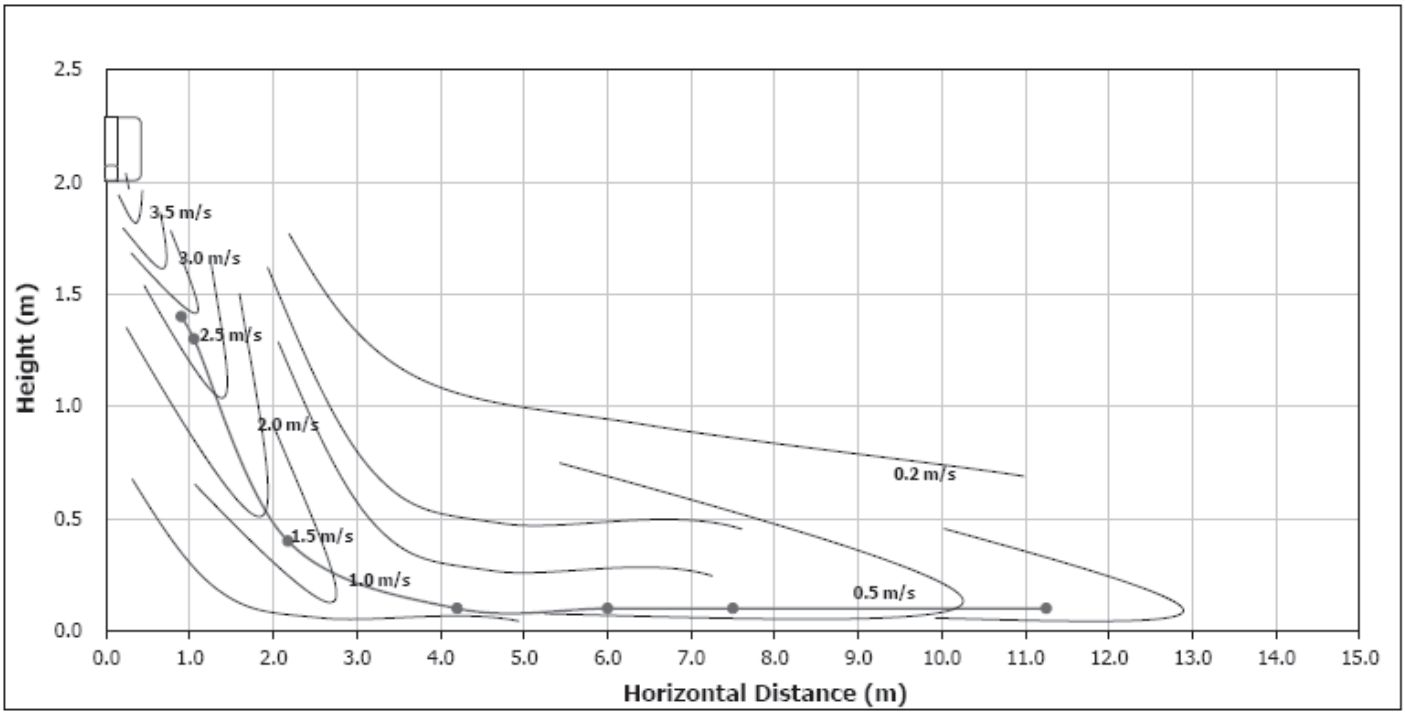

RAV-HM1101KRTP-E / TR

Cooling

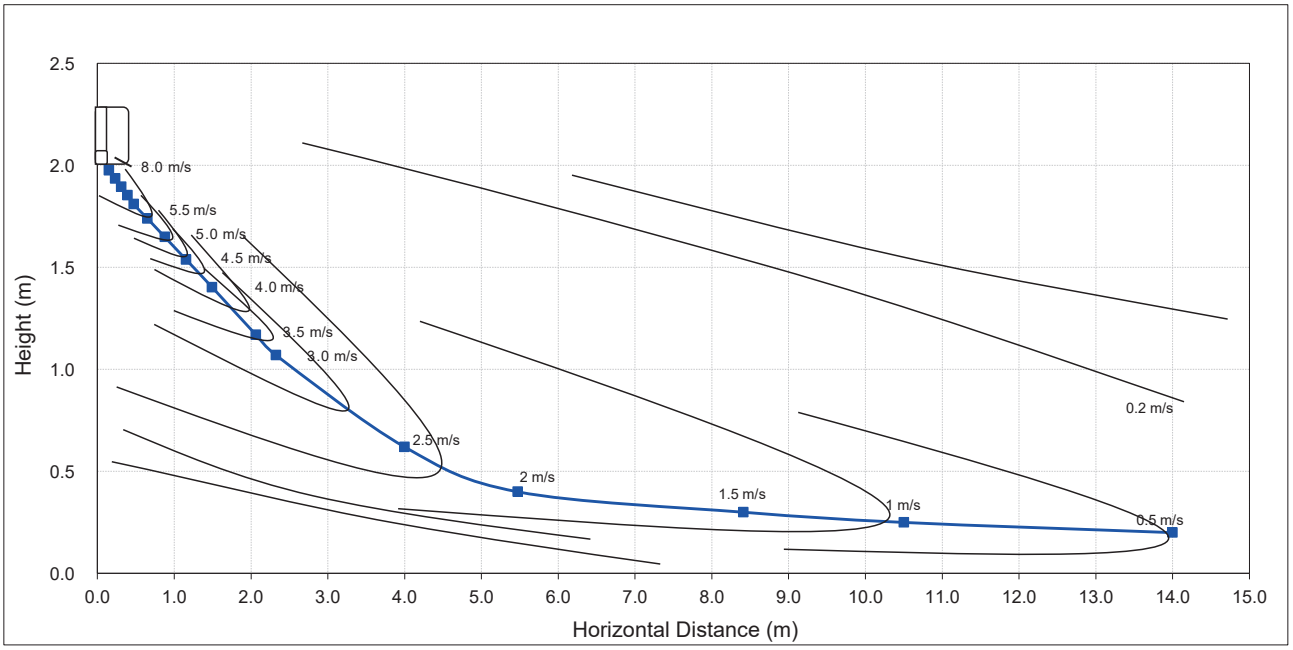

Heating

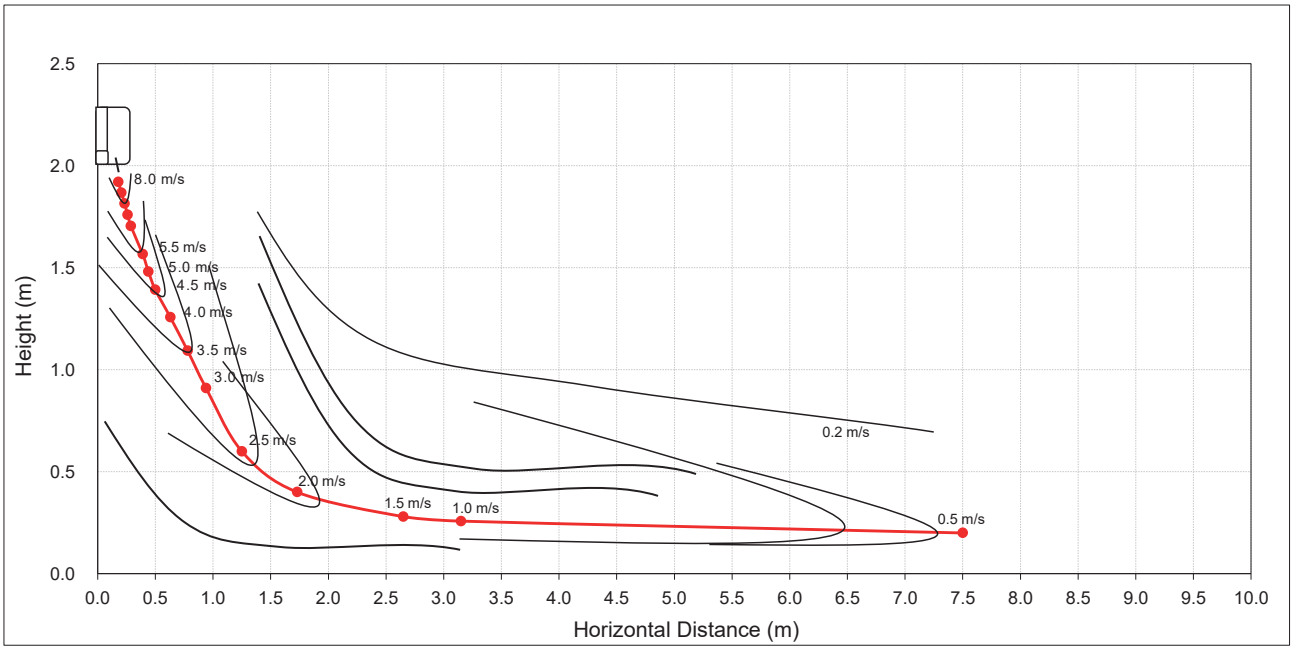

RAV-HM561KRSP-E/TR

Cooling

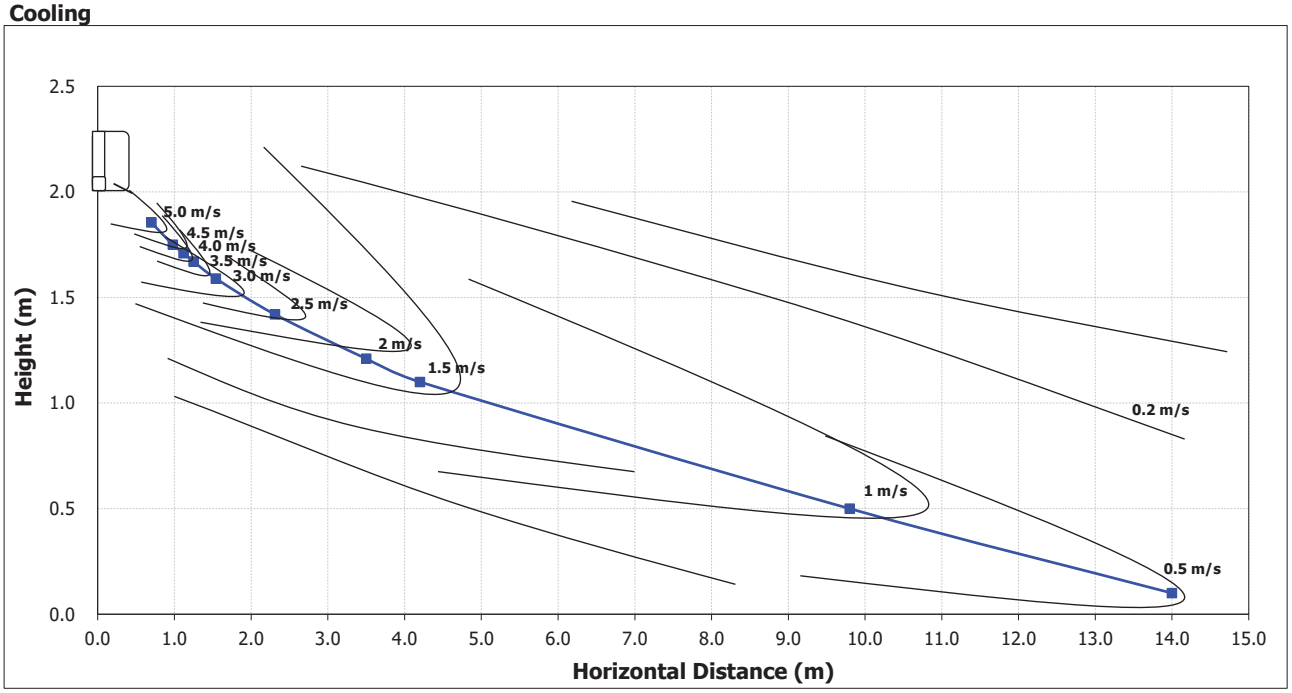

RAV-HM801KRSP-E/TR

Cooling

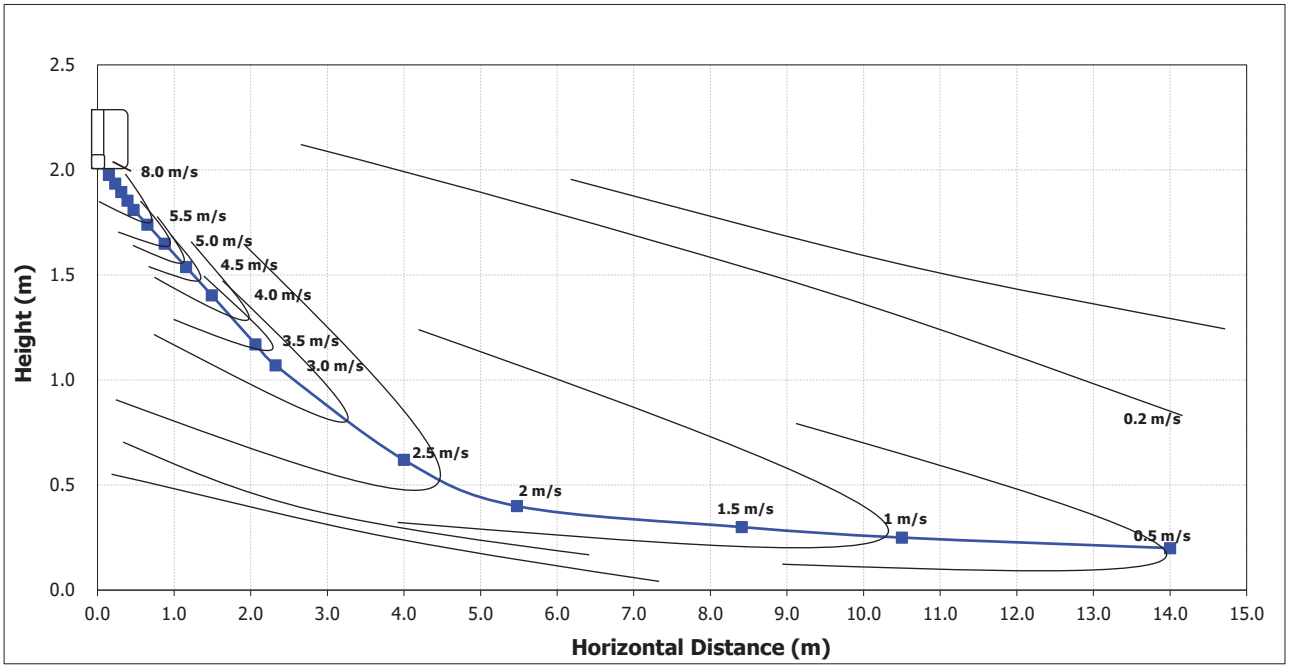

2-6-7. Sound Characteristics (NC curve)

RAV-HM301KRTP-E/TR

Cooling

Specification （d B）			
Fan tap	H	M	L
Sound pressure level (dB(A))	40	34	29

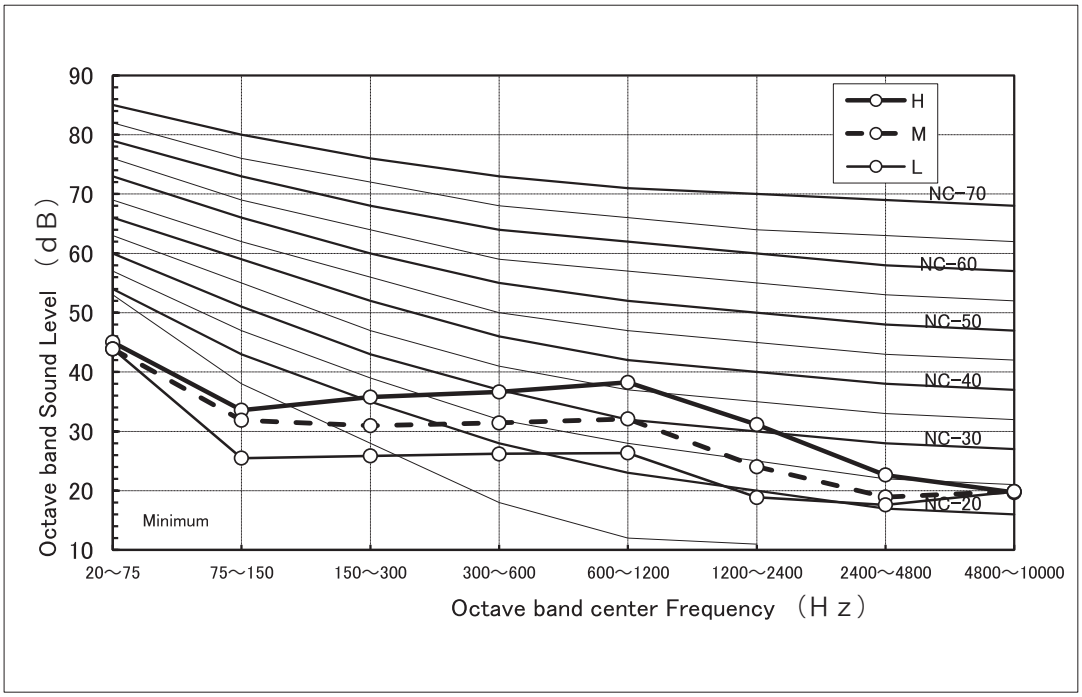

Heating

Specification （d B）			
Fan tap	H	M	L
Sound pressure level (dB(A))	40	34	29

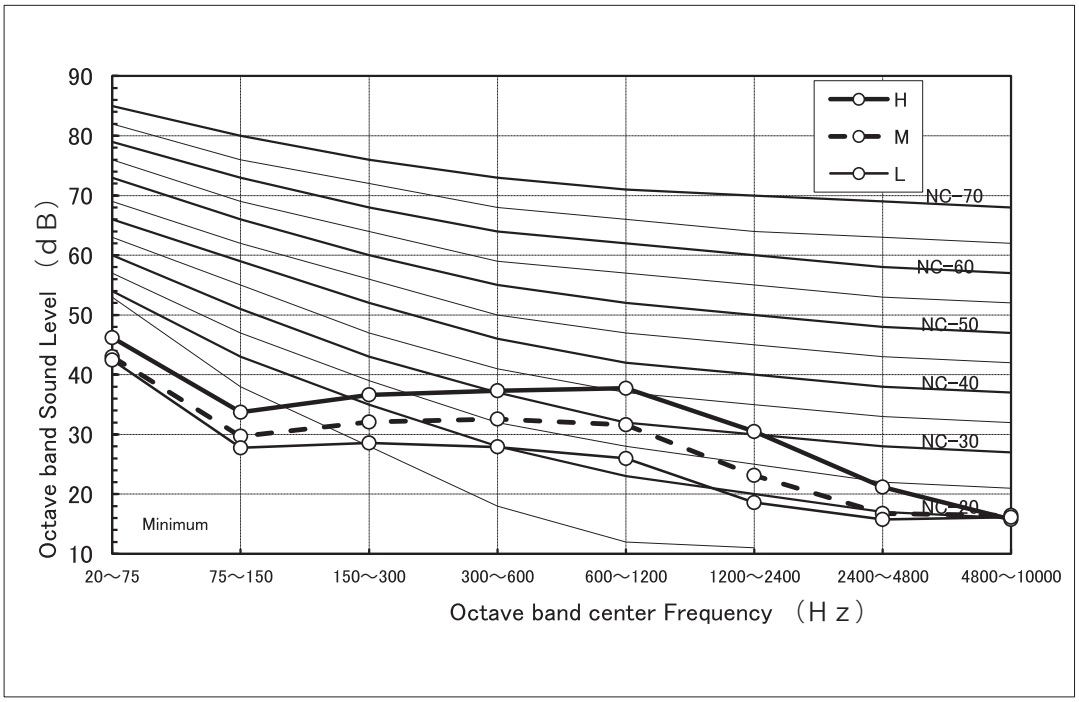

RAV-HM401KRTP-E/TR

Cooling

Specification （d B）			
Fan tap	H	M	L
Sound pressure level (dB(A))	41	36	30

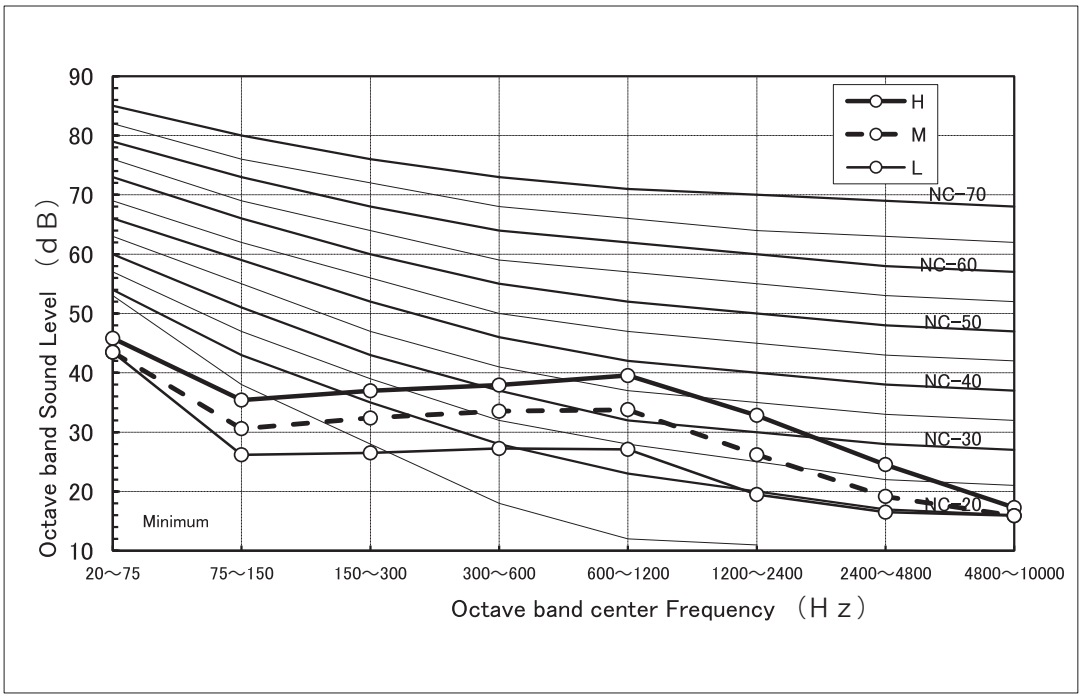

Heating

Specification （d B）			
Fan tap	H	M	L
Sound pressure level (dB(A))	41	36	30

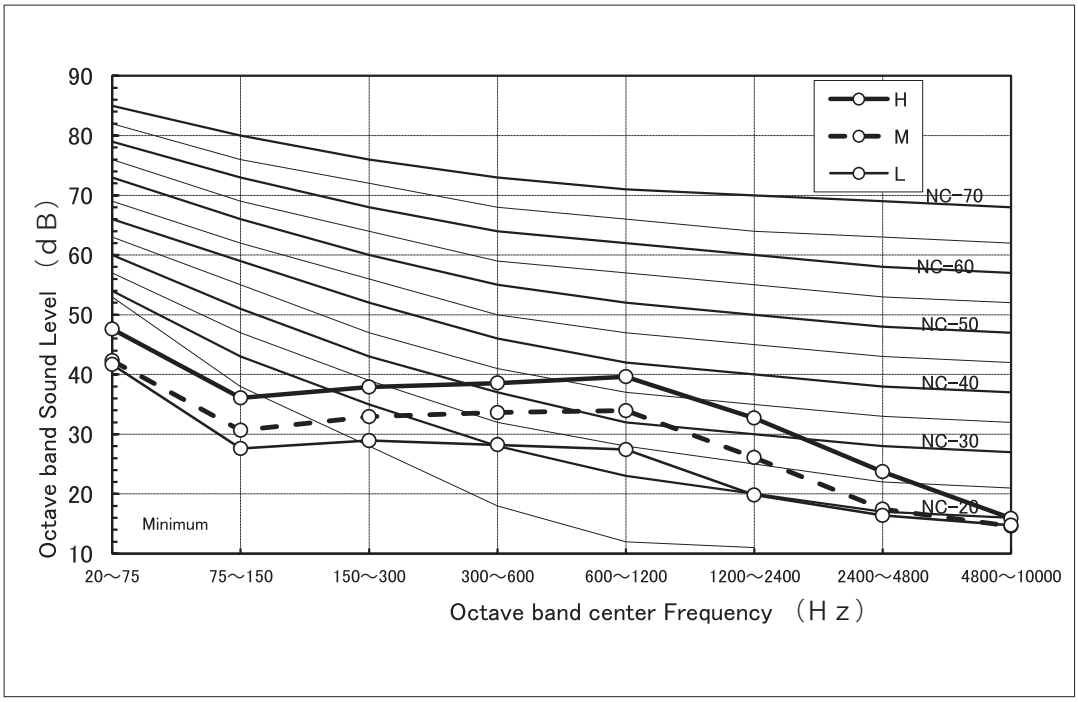

RAV-HM561KRTP-E/TR

Cooling

Specification （d B）			
Fan tap	H	M	L
Sound pressure level (dB(A))	42	39	35

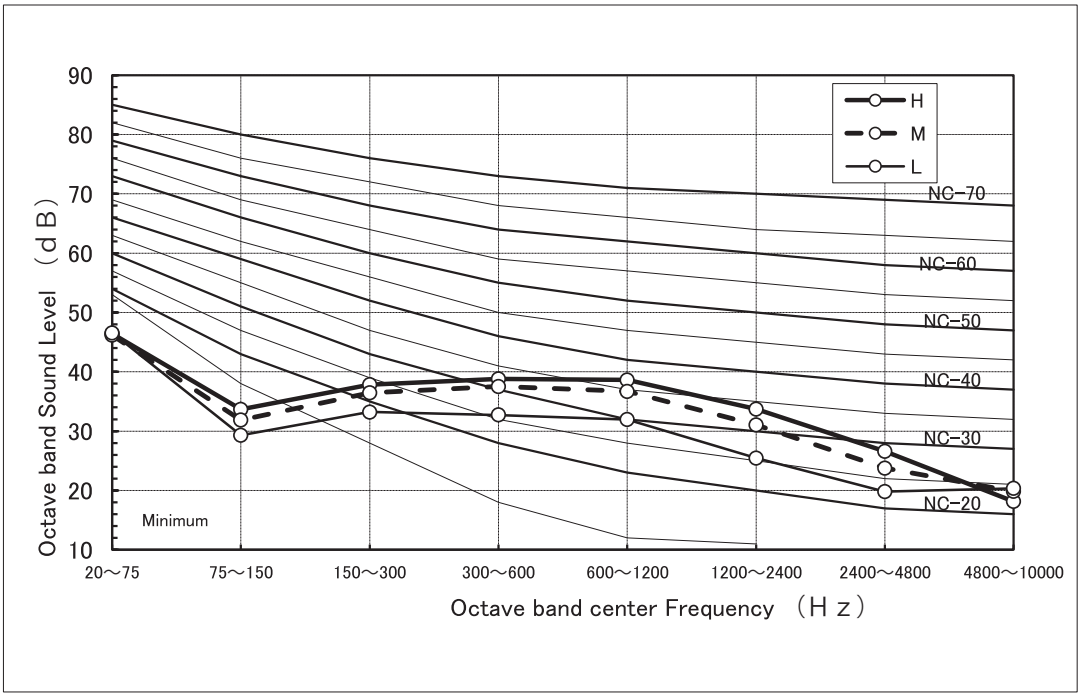

Heating

Specification （d B）			
Fan tap	H	M	L
Sound pressure level (dB(A))	42	39	35

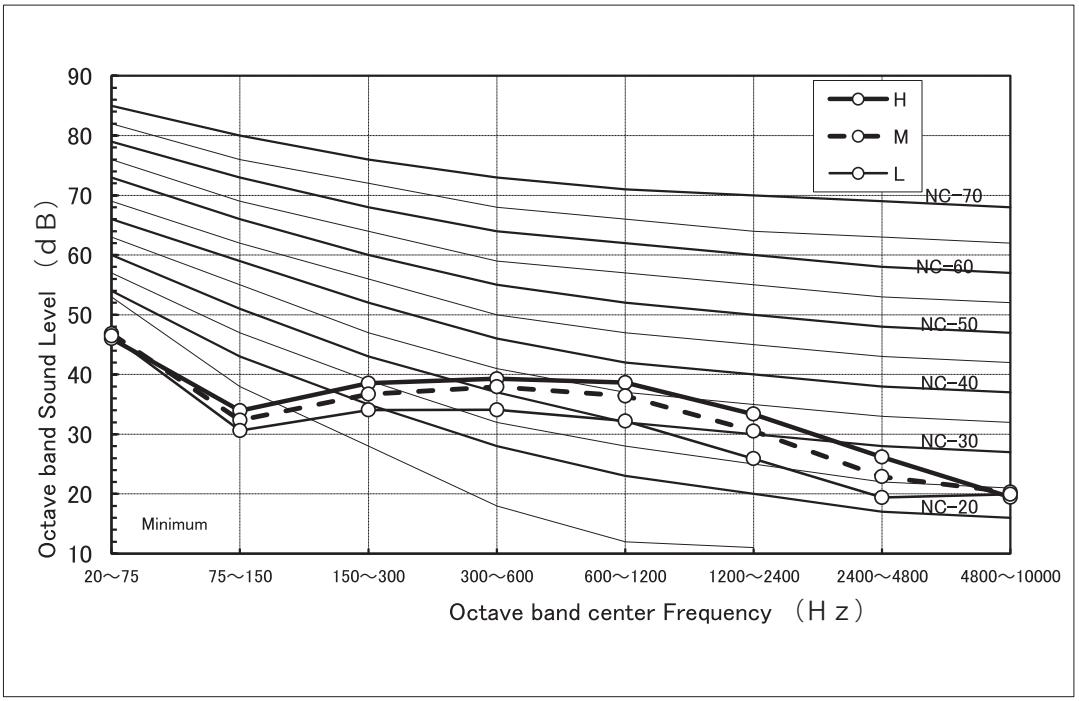

RAV-HM801KRTP-E/TR

Cooling

Specification （d B）			
Fan tap	H	M	L
Sound pressure level (dB(A))	45	41	35

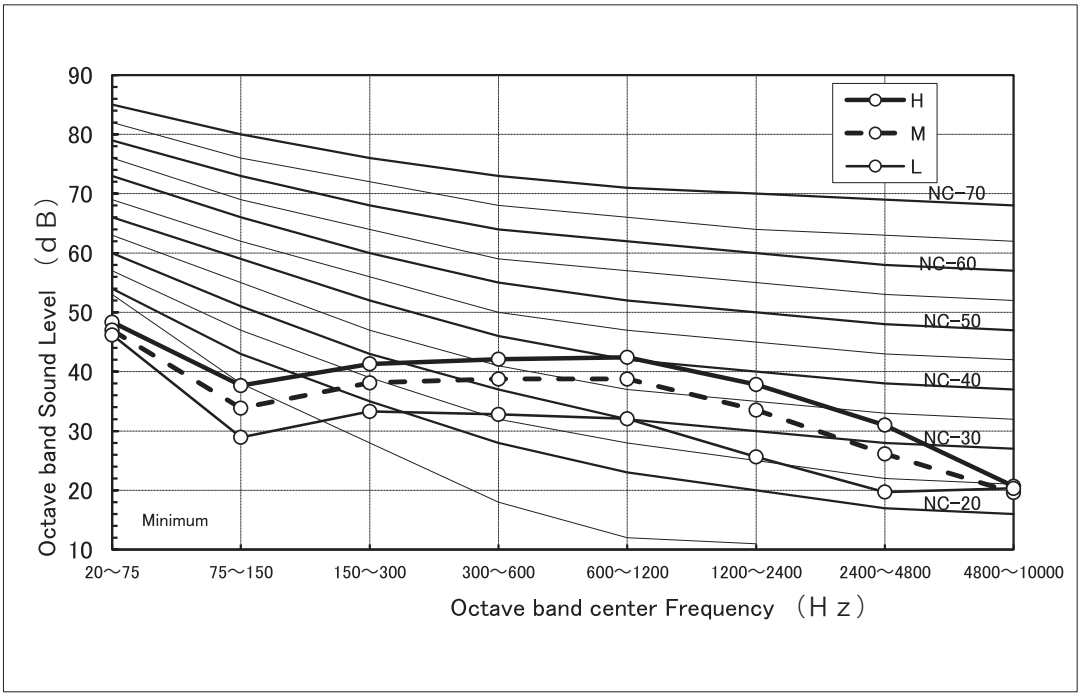

Heating

Specification （d B）			
Fan tap	H	M	L
Sound pressure level (dB(A))	45	41	35

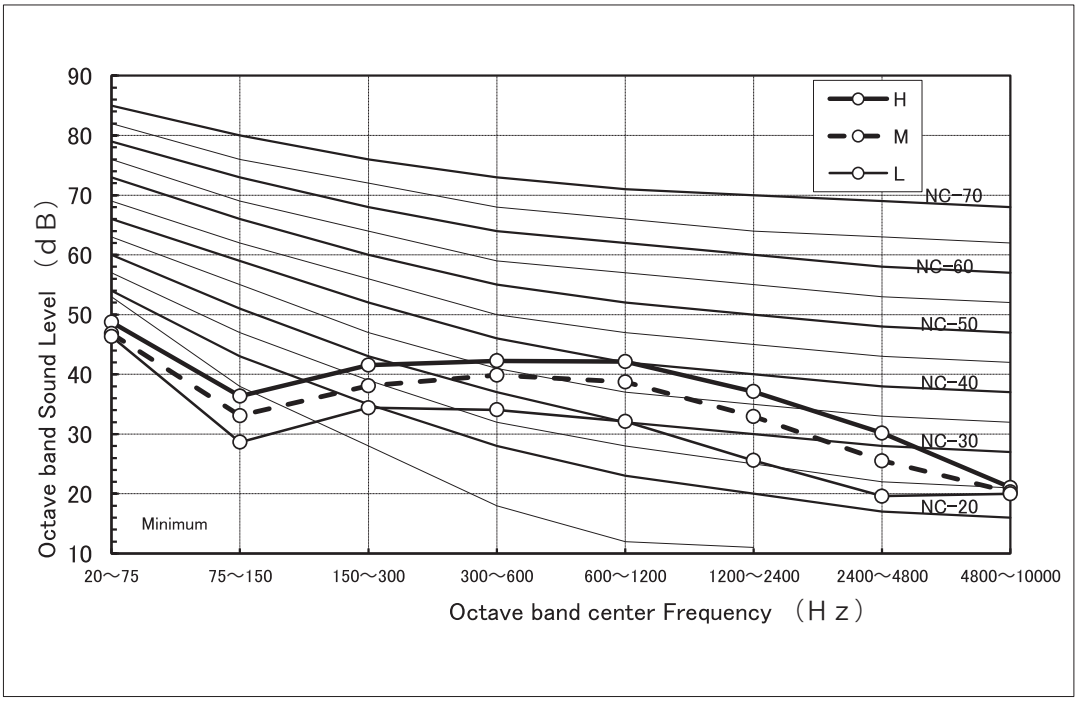

RAV- HM1101KRTP-E / TR

Cooling

Specification （d B）			
Fan tap	H	M	L
Sound pressure level (dB(A))	49	45	41

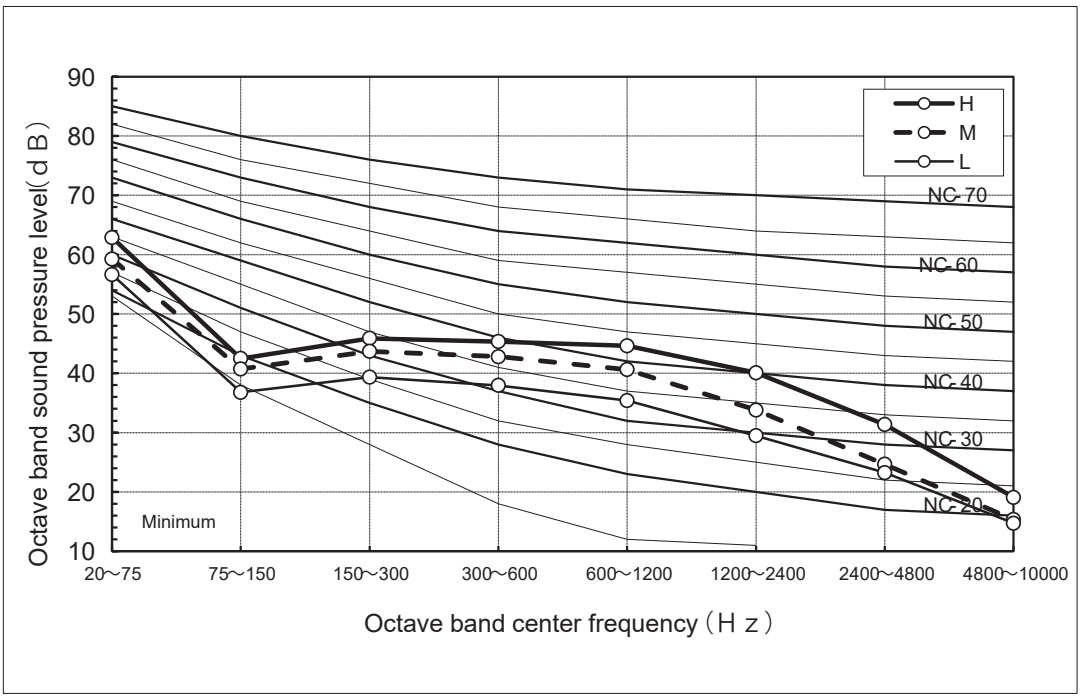

Heating

Specification （d B）			
Fan tap	H	M	L
Sound pressure level (dB(A))	49	45	41

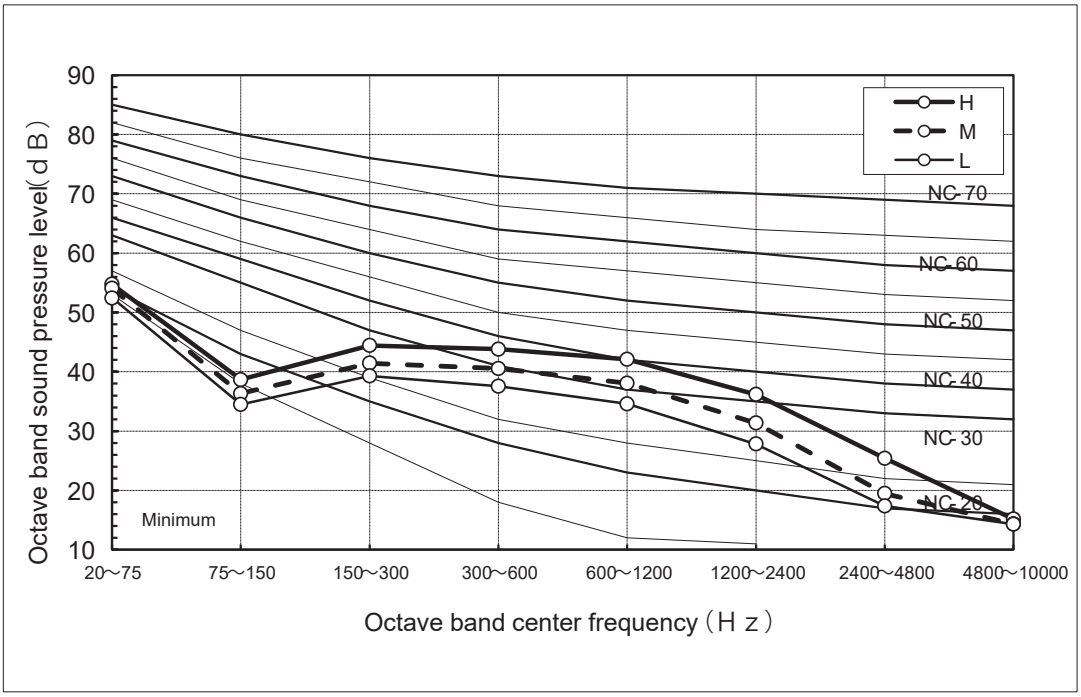

RAV- HM561KRSP-E / TR

Cooling

Specification (dB)			
Fan tap	H	M	L
Sound pressure level (dB(A))	45	39	35

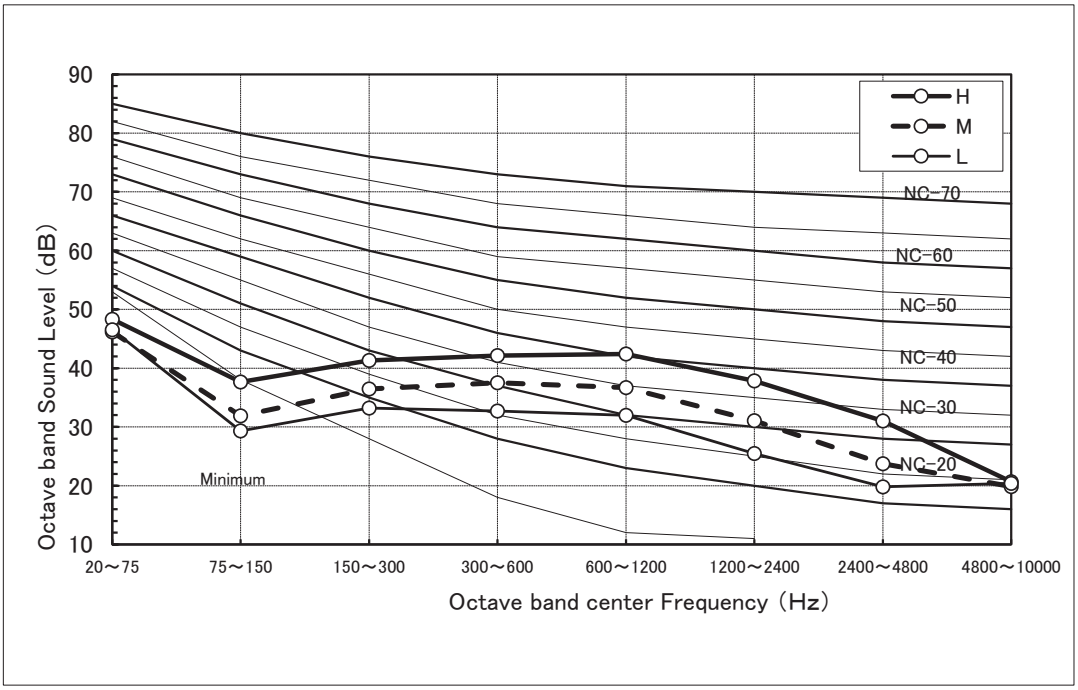

RAV- HM801KRSP-E / TR

Cooling

Specification (dB)			
Fan tap	H	M	L
Sound pressure level (dB(A))	49	45	41

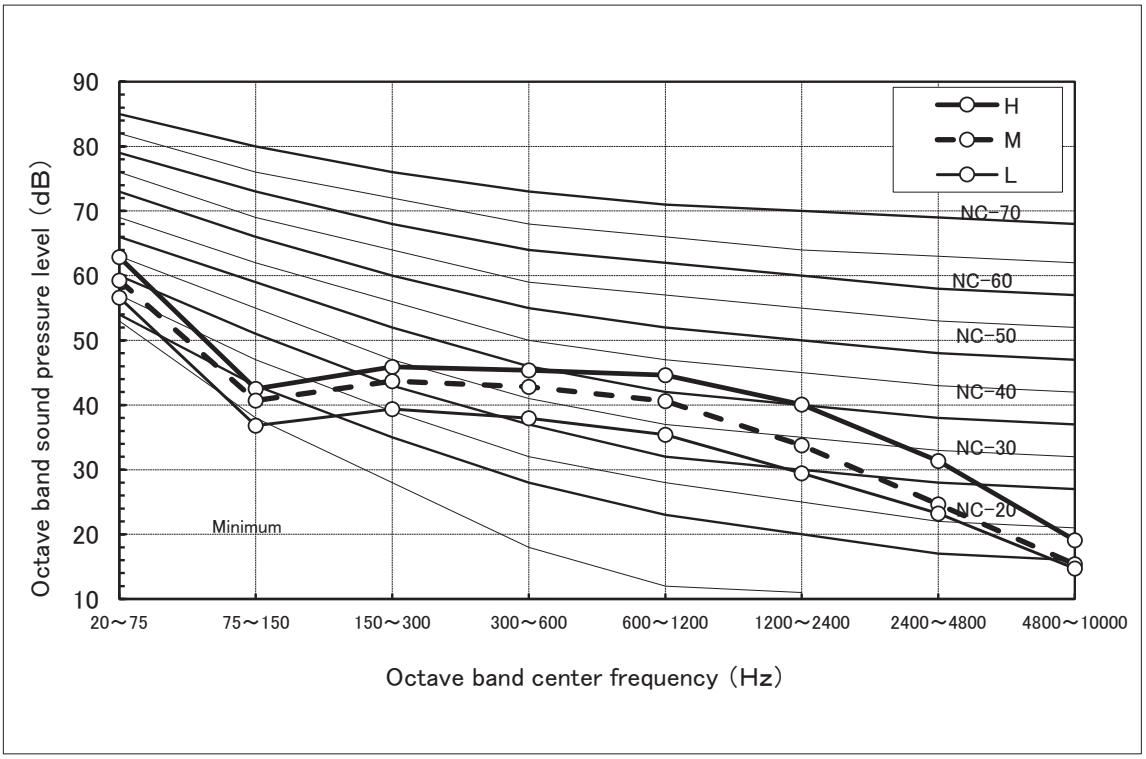

3. Outdoor Unit

3-1. Specifications

3-2. Dimension

3-3. Wiring Diagrams

3-4. Rrfrigerant Cycle Diagram

3-5. Sound Characteristic

3-6. Connecting Pipe Length and Lift Difference Between Indoor Units VS. Capacity Correction Value

3-1 Specification

Model	Outdoor unit (RAV-)	GM301ATP-E/TR	GM401ATP-E/TR	GM561ATP-E1/TR1	GM801ATP-E/TR	GM1101ATP-E/TR	GM1401ATP-E/TR
	(RAV-)	GM301ATJP-E	GM401ATJP-E	GM561ATJP-E1	GM801ATJP-E	GM1101ATJP-E	GM1401ATJP-E
Power supply		1 phase 220V-240V / 50Hz, 1 phase 220V / 60Hz (Power exclusive to outdoor is required)					
Compressor	Type	Hermetic Compressor					
	Motor (kW)	0.75	1.10	1.10	1.60	3.00	
	Pole	4					
Refrigerant Charged	(kg)	0.63	0.9	0.9	1.3	2.1	
Refrigerant Control	(kg)	Pulse motor valve					
Outer dimension	Height (mm)	550		550		890	
	Width (mm)	780		780		900	
	Depth (mm)	290		290		320	
Appearance		Silky shade (Muncel 1Y 8.5 / 0.5					
Total weight	Main unit (kg)	29	34	40	43	68	
Heat Exchanger		Finned tube					
Fan Unit	Fan	Propeller fan					
	Standard air flow (m³ / min)	30	37	40	45	68	70
	Motor (W)	43				100	
Inter Connecting Pipe	Standard length	7.5					
	Min. length (m)	2.0		5.0			
	Max. total length (m)	20.0		30.0		50.0	
	Additional refrigerant charge under long piping connector	20 g / m (15 m. to 20 m.)		20 g / m (21 m. to 30 m.)	35 g / m (21 m. to 30 m.)	35 g / m (31 m. to 50 m.)	
	Height difference: Outdoor low (m)	10		30			
	Height difference: Outdoor high (m)	10		30			
Flare Connections	Gas side (mm)	9.5	12.7	12.7	15.9		
	Liquid side (mm)	6.4	6.4	6.4	9.5		
Sound pressure level	Cooling / Heating (dB)	46 / 47	49 / 50	46 / 48	48 / 52	54 / 57	55 / 57
Sound power level	Cooling / Heating (dB)	61 / 62	64 / 65	63 / 65	65 / 69	70 / 74	70 / 74
Operating Range	Cooling (°C)	-15 / 46					
	Heating (°C)	-15 / 15					

3-2. Dimension

RAV-GM301ATP-E/TR, RAV-GM401ATP-E/TR, RAV-GM561ATP-E1/TR1, RAV-GM801ATP-E/TR, (*ATJP-E)

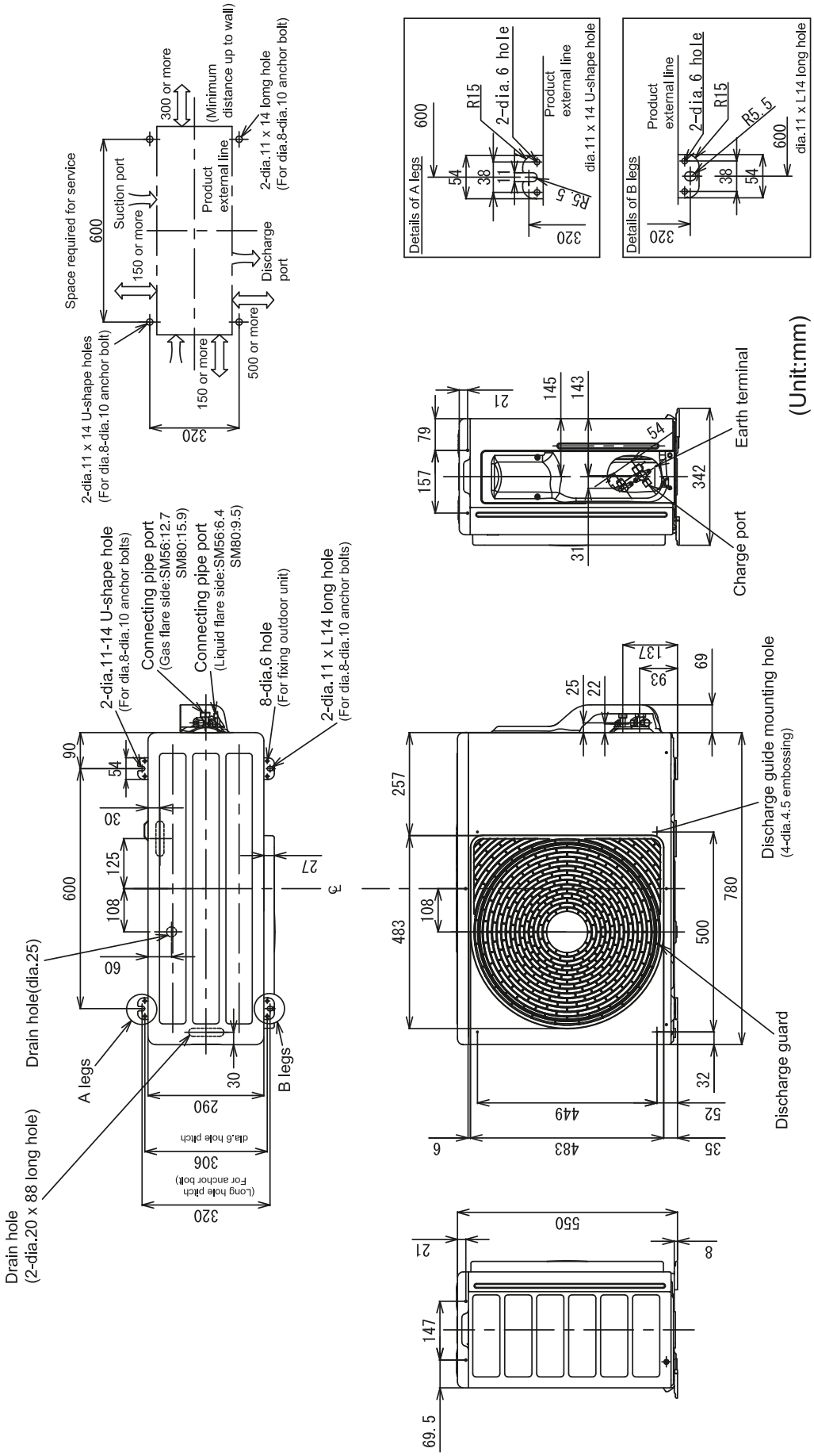

RAV-GM1101ATP-E/TR, RAV-GM1401ATP-E/TR (*ATJP-E)

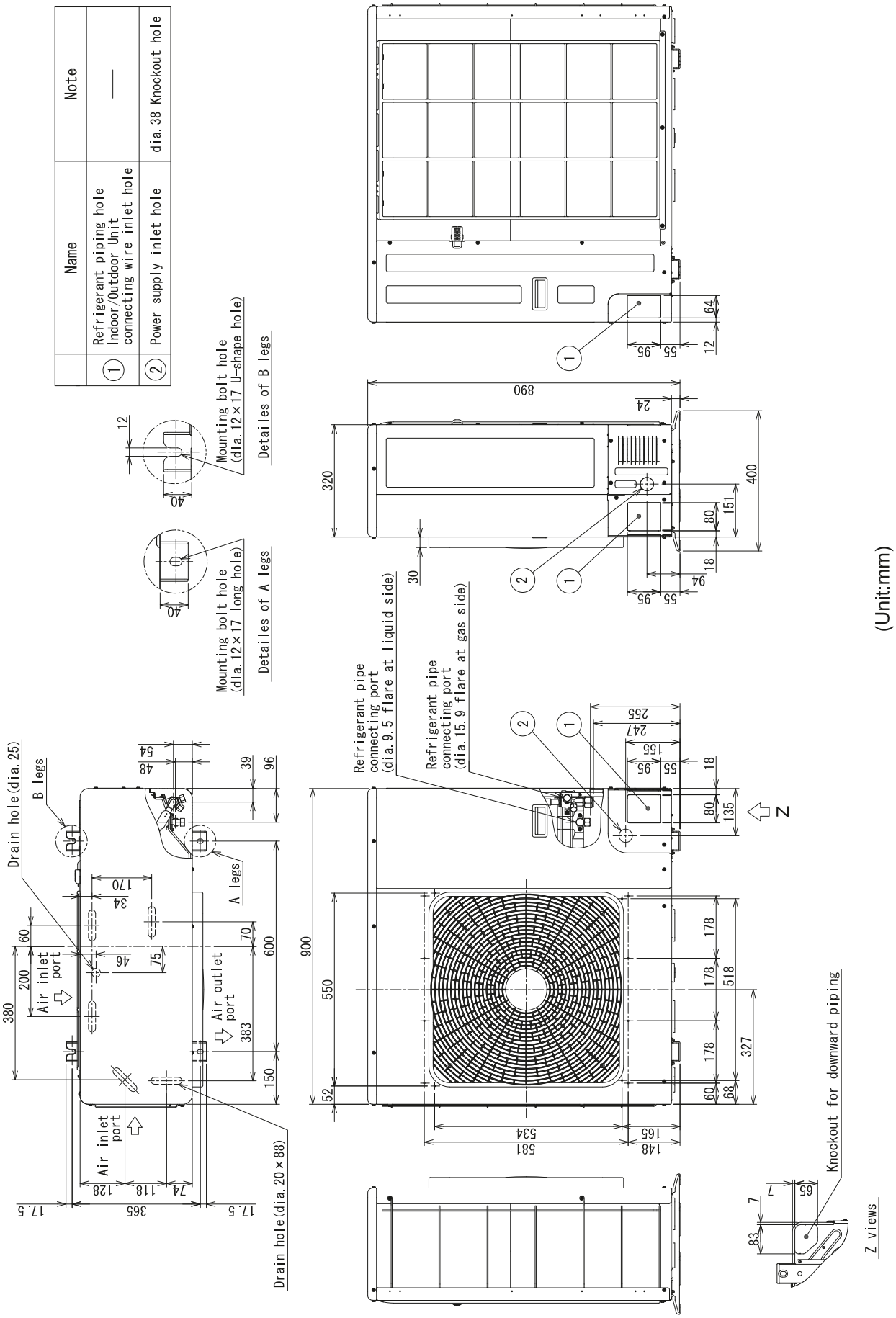

3-3. Wiring diagrams

RAV-GM301ATP-E/TR, RAV-GM401ATP-E/TR (*ATJP-E)

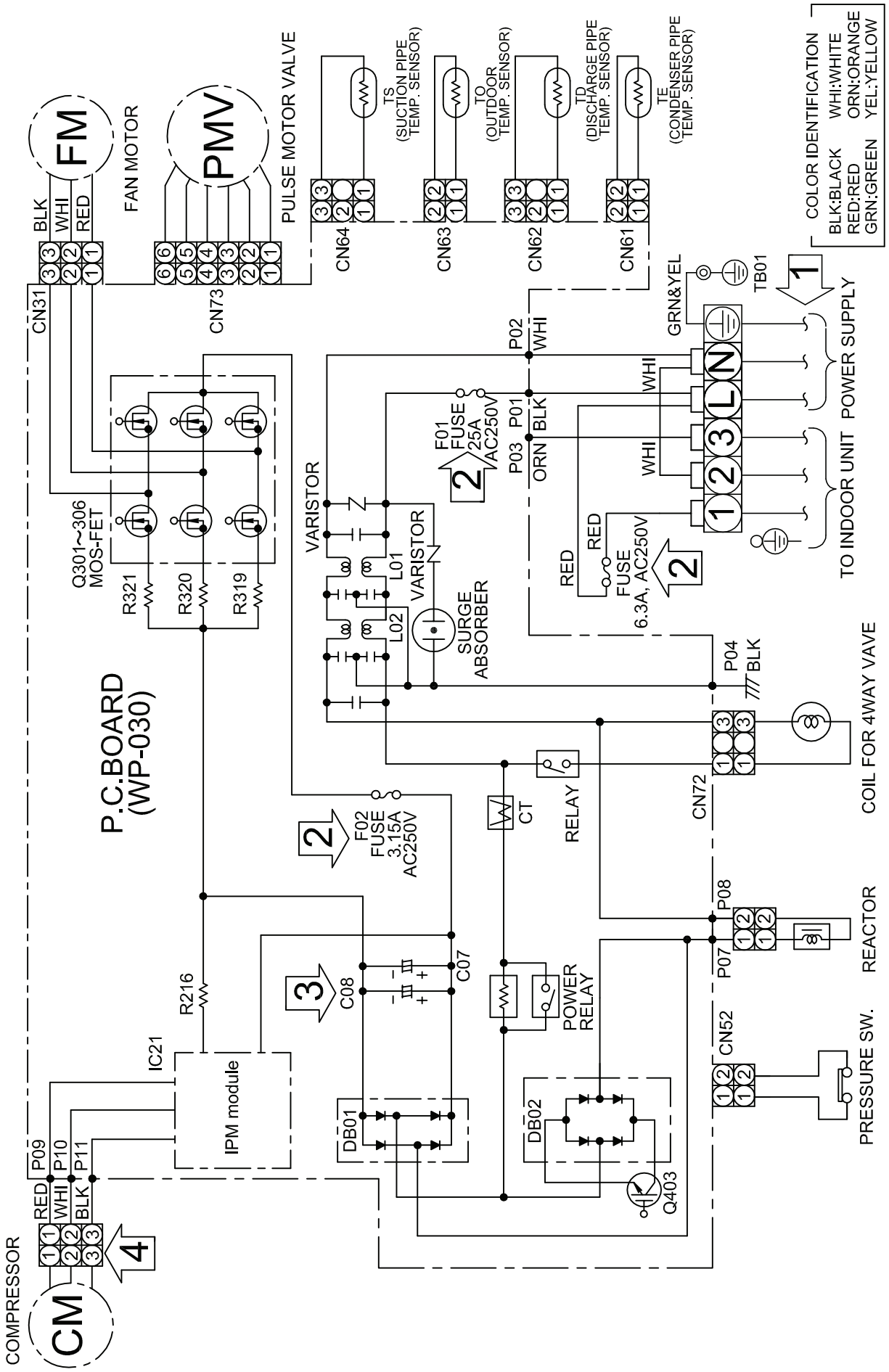

RAV-GM561ATP-E1/TR1, RAV-GM801ATP-E/TR (*ATJP-E)

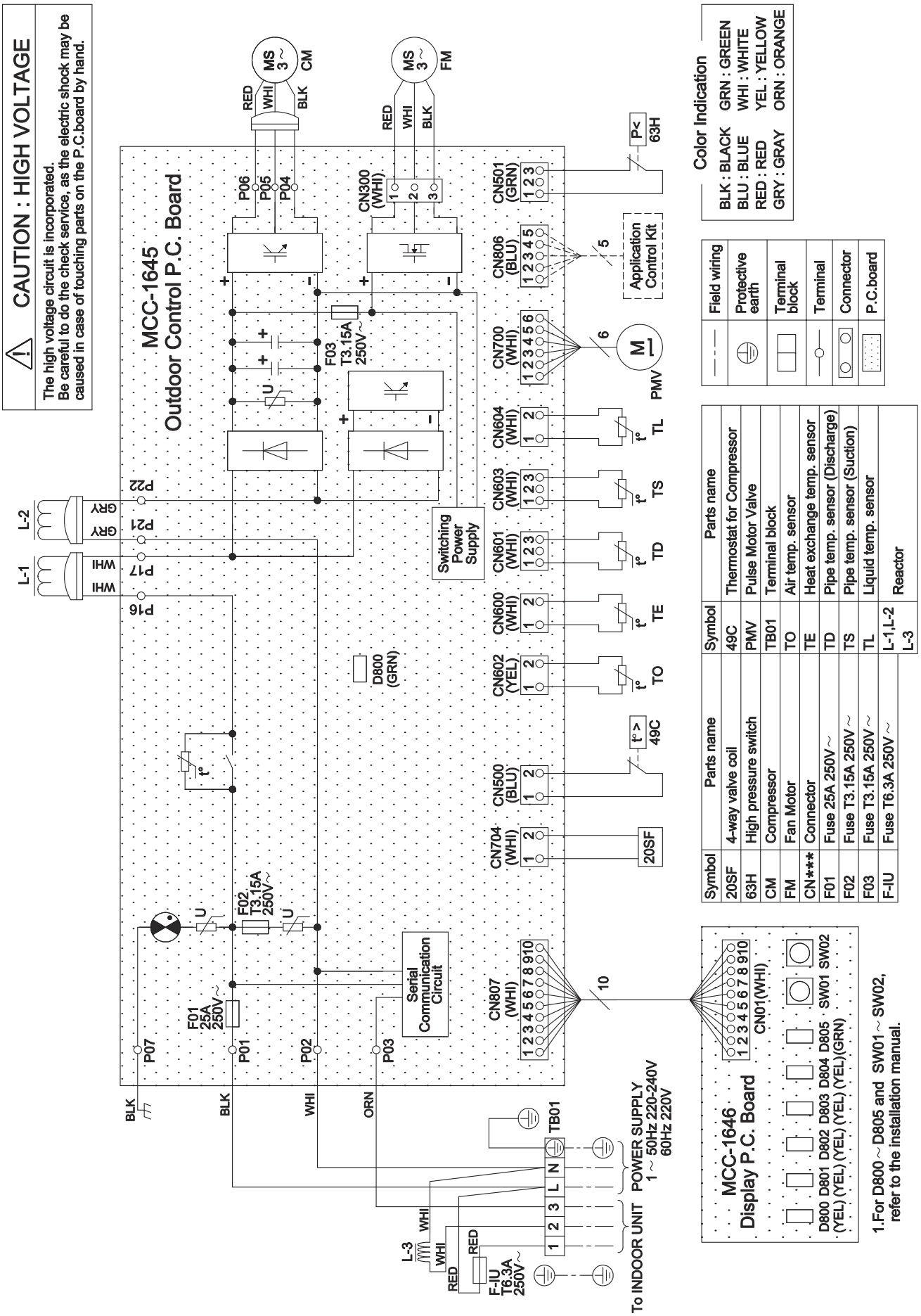

Symbol	Parts name
20SF	4-way valve coil
63H	High pressure switch
CM	Compressor
FM	Fan Motor
CN***	Connector
F01	Fuse 25A 250V~
F02	Fuse T3.15A 250V~
F03	Fuse T3.15A 250V~
F-IU	Fuse T6.3A 250V~

Symbol	Parts name
49C	Thermostat for Compressor
PMV	Pulse Motor Valve
TB01	Terminal block
TO	Air temp. sensor
TE	Heat exchange temp. sensor
TD	Pipe temp. sensor (Discharge)
TS	Pipe temp. sensor (Suction)
TL	Liquid temp. sensor
L-1,L-2 L-3	Reactor

RAV-GM1101ATP-E/TR, RAV-GM1401ATP-E/TR (*ATJP-E)

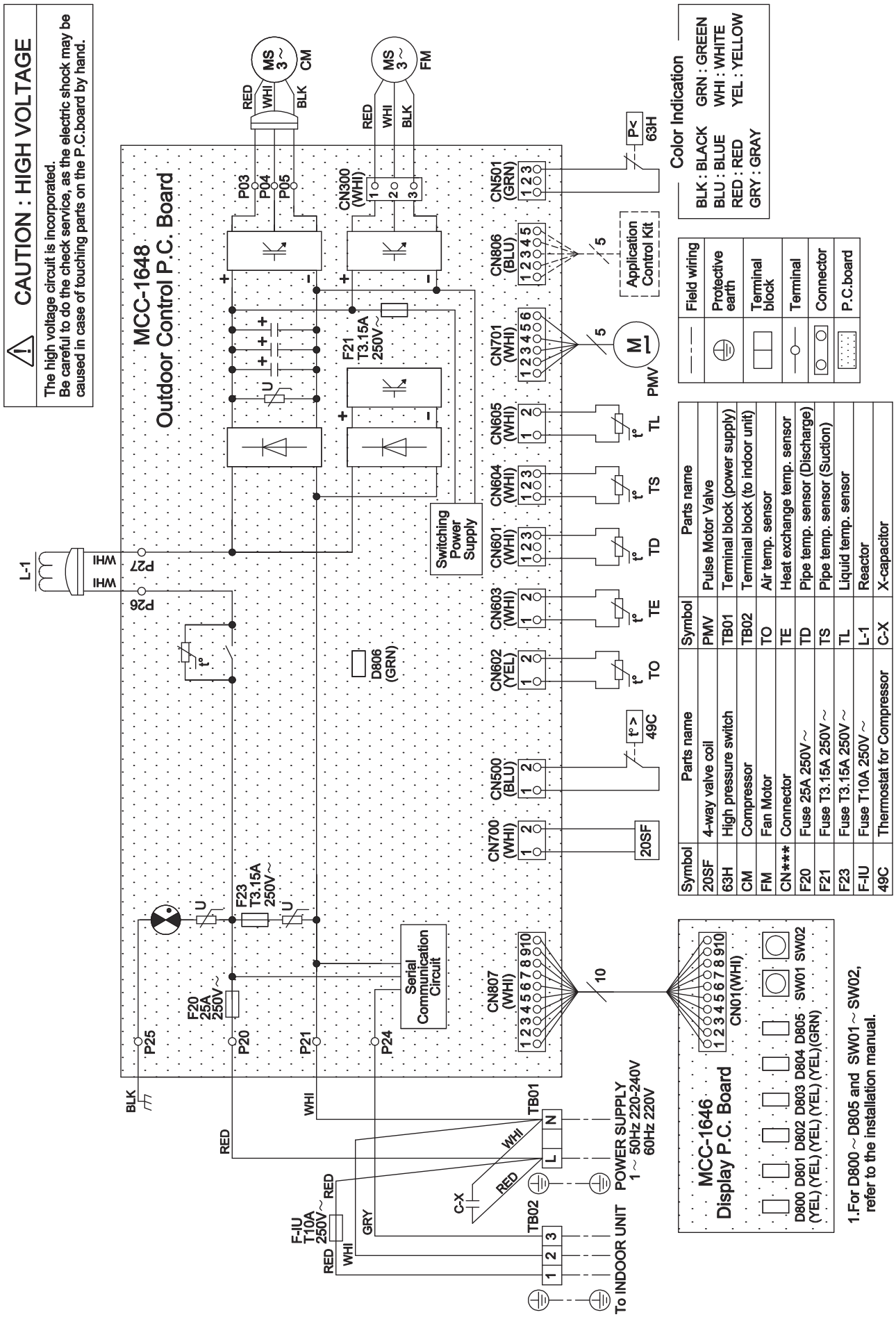

Symbol	Parts name
20SF	4-way valve coil
63H	High pressure switch
CM	Compressor
FM	Fan Motor
CN***	Connector
F20	Fuse 25A 250V ~
F21	Fuse T3.15A 250V ~
F23	Fuse T3.15A 250V ~
F-IU	Fuse T10A 250V ~
49C	Thermostat for Compressor

Symbol	Parts name
PMV	Pulse Motor Valve
TB01	Terminal block (power supply)
TB02	Terminal block (to indoor unit)
TO	Air temp. sensor
TE	Heat exchange temp. sensor
TD	Pipe temp. sensor (Discharge)
TS	Pipe temp. sensor (Suction)
TL	Liquid temp. sensor
L-1	Reactor
C-X	X-capacitor

3-4. Refrigerant cycle diagram

RAV-GM301ATP-E/TR (*ATJP-E)

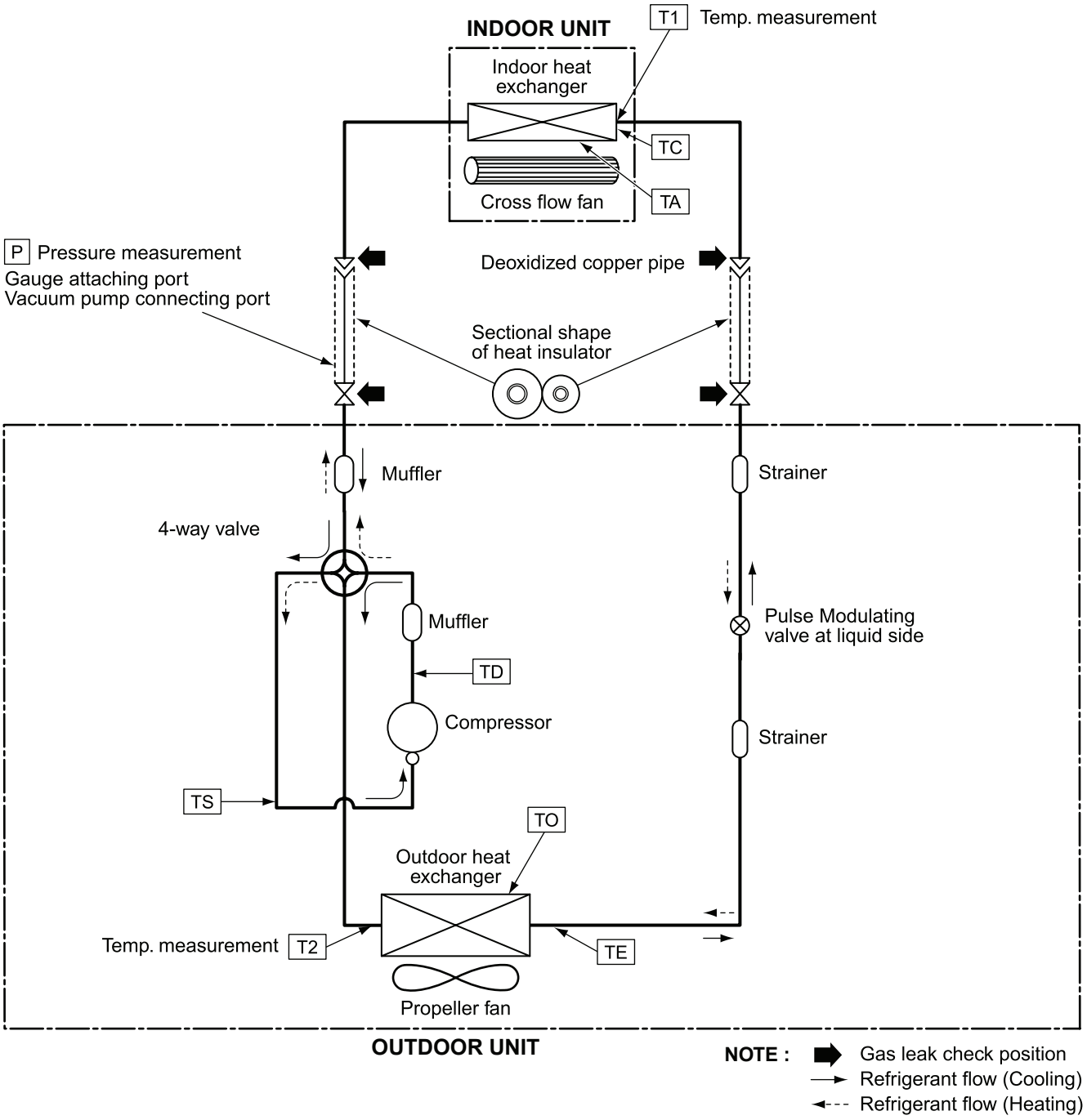

NOTE :

- The maximum pipe length of this air conditioner is 20 m. When the pipe length exceeds 15m, the additional charging of refrigerant, 20g per 1m for the part of pipe exceeded 15m is required. (Max. 100g)

RAV-GM401ATP-E/TR (*ATJP-E)

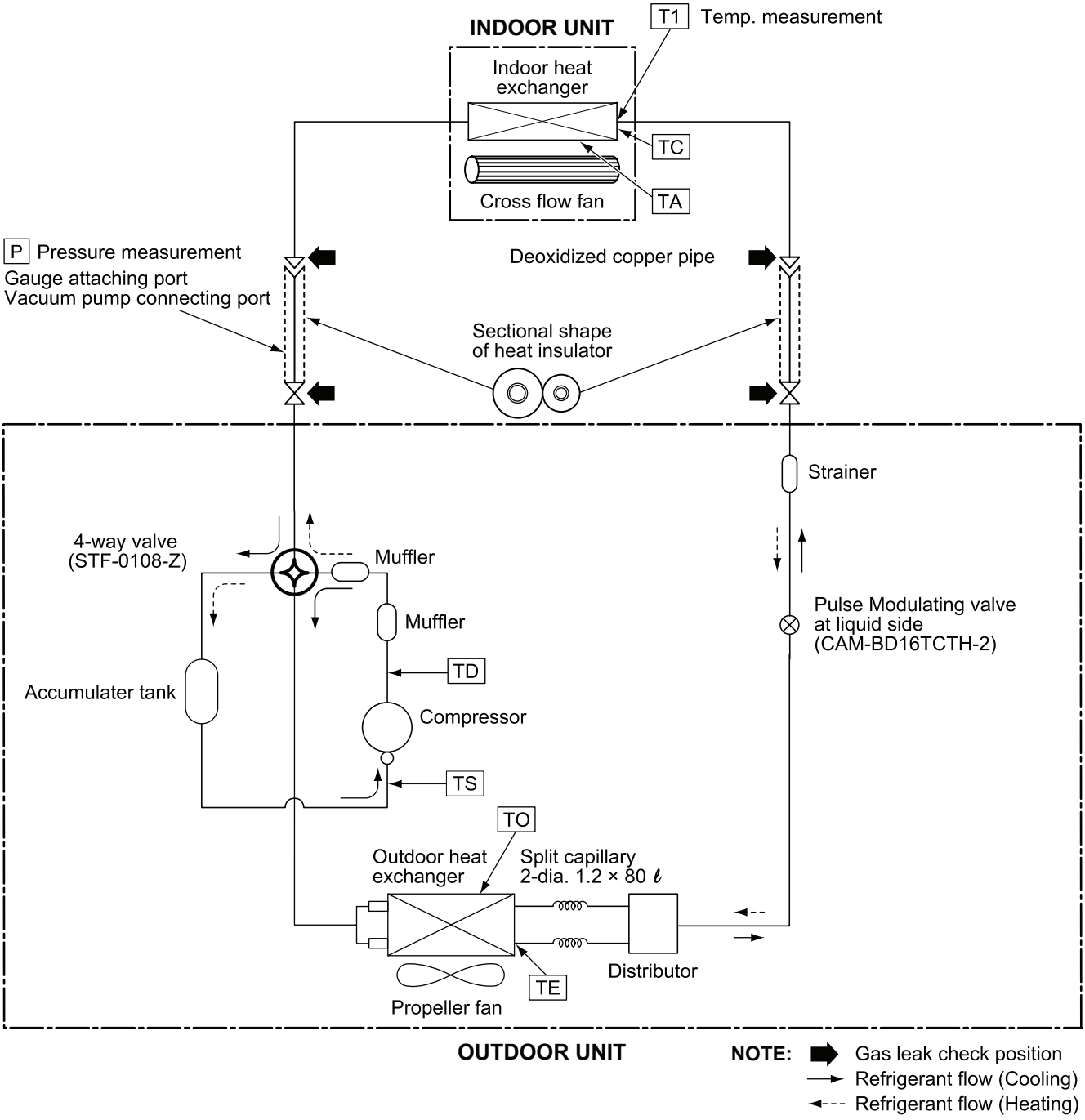

NOTE :

- The maximum pipe length of this air conditioner is 20m. When the pipe length exceeds 15m, the additional charging of refrigerant, 20g per 1m for the part of pipe exceeded 15m is required. (Max. 100g)

RAV-GM561ATP-E1/TR1 (*ATJP-E)

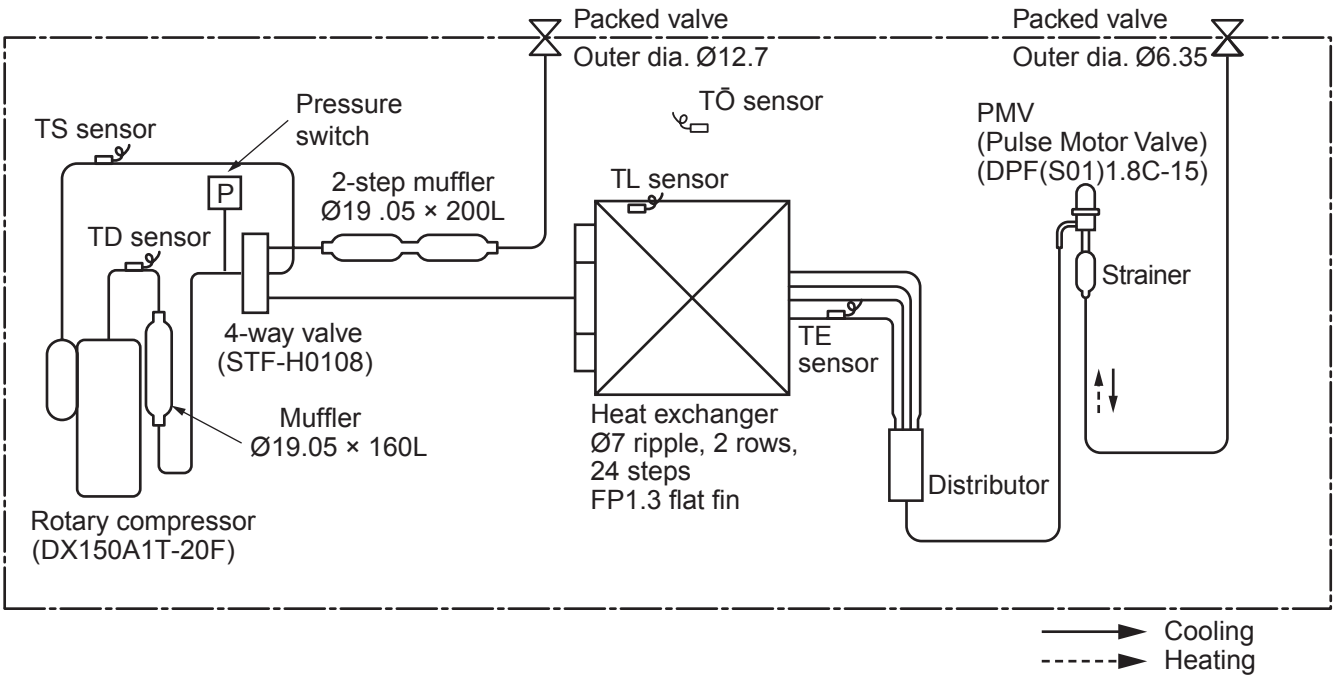

RAV-GM801ATP-E/TR (*ATJP-E)

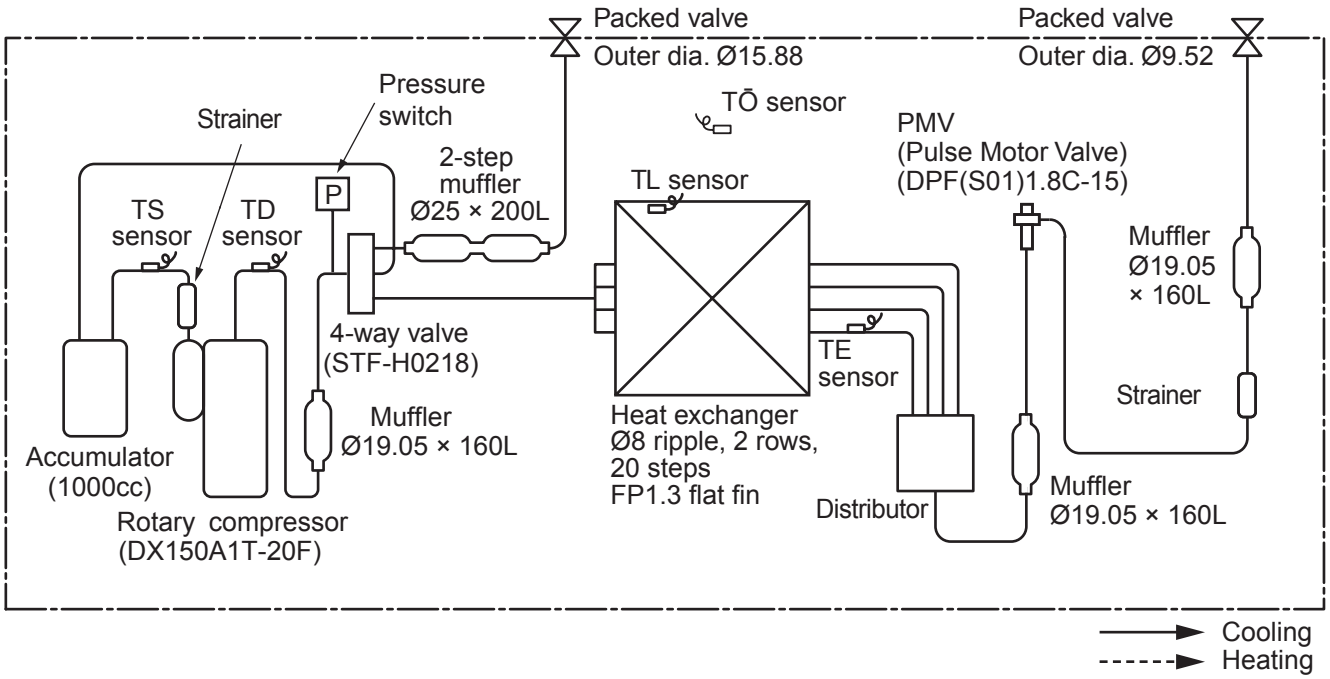

RAV-GM1101ATP-E/TR, RAV-GM1401ATP-E/TR (*ATJP-E)

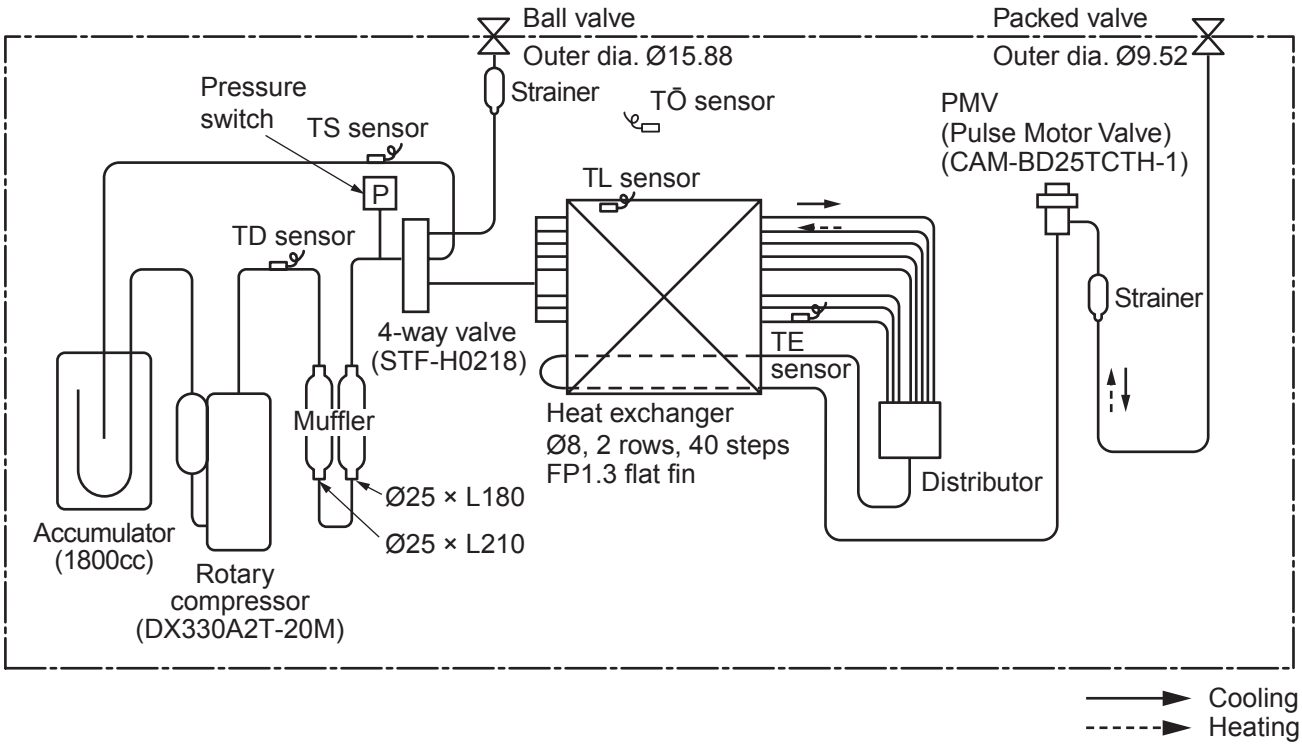

3-5. Sound characteristics (NC curve)

RAV-GM301ATP-E/TR (*ATJP-E)

Measured point	Specification （d B）	
	Cooling	Heating
Horizontal 1.0 m	46	47

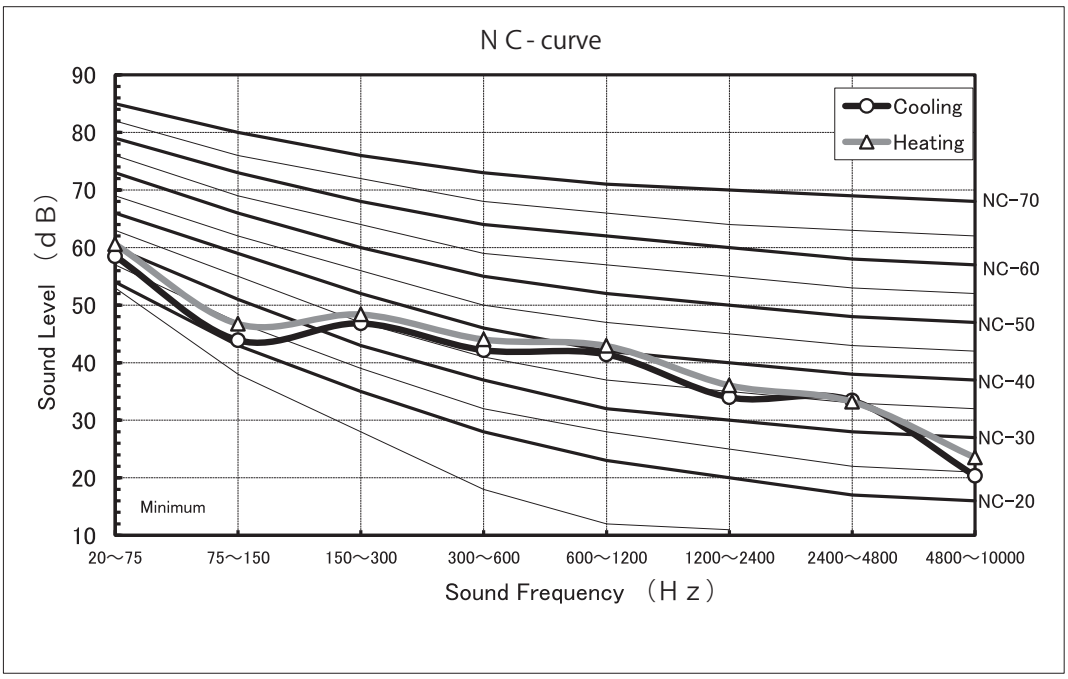

RAV-GM401ATP-E/TR (*ATJP-E)

Measured point	Specification （d B）	
	Cooling	Heating
Horizontal 1.0 m	49	50

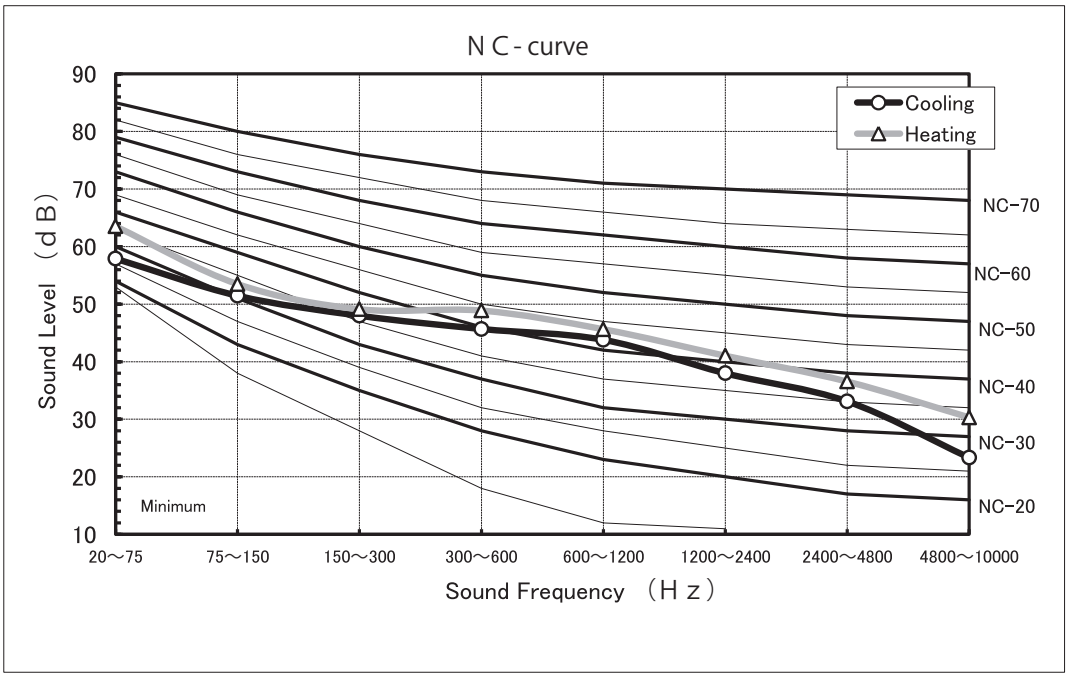

RAV-GM561ATP-E1/TR1 (*ATJP-E)

Sound pressure level (dB(A))	Cooling	Heating
	46	48

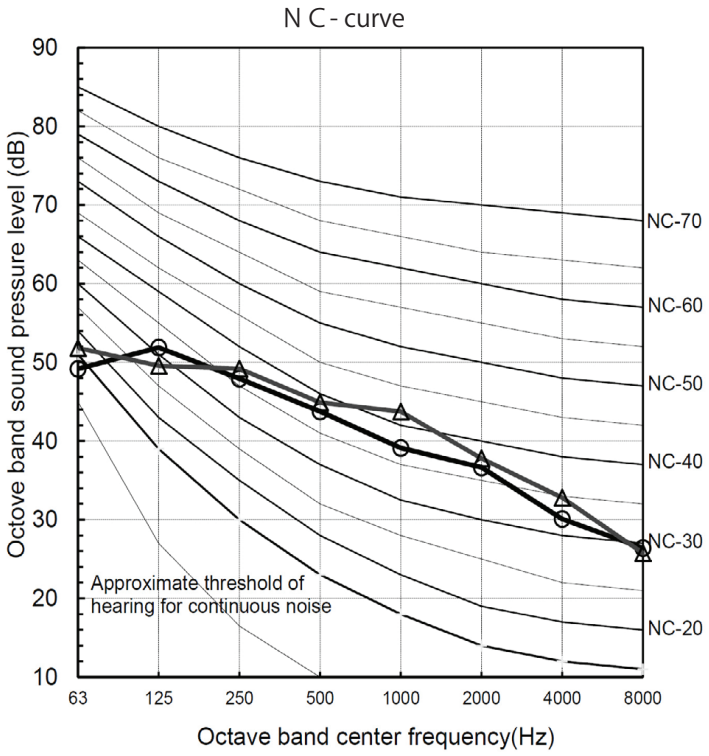

RAV-GM801ATP-E/TR (*ATJP-E)

Sound pressure level (dB(A))	Cooling	Heating
	48	52

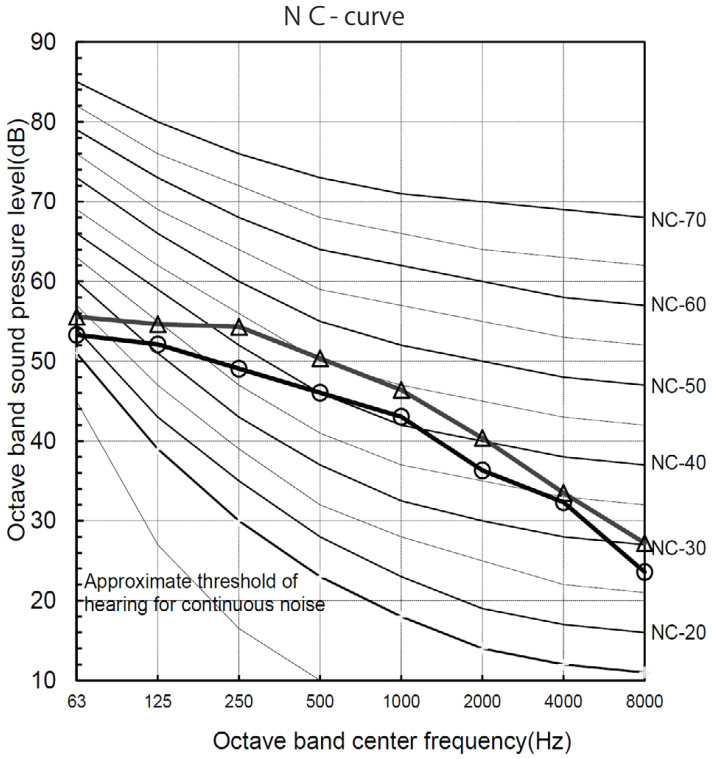

RAV-GM1101ATP-E/TR (*ATJP-E)

Measured point	Specification （d B）	Specification （d B）
	Cooling	Heating
Horizontal 1.0 m	54	57

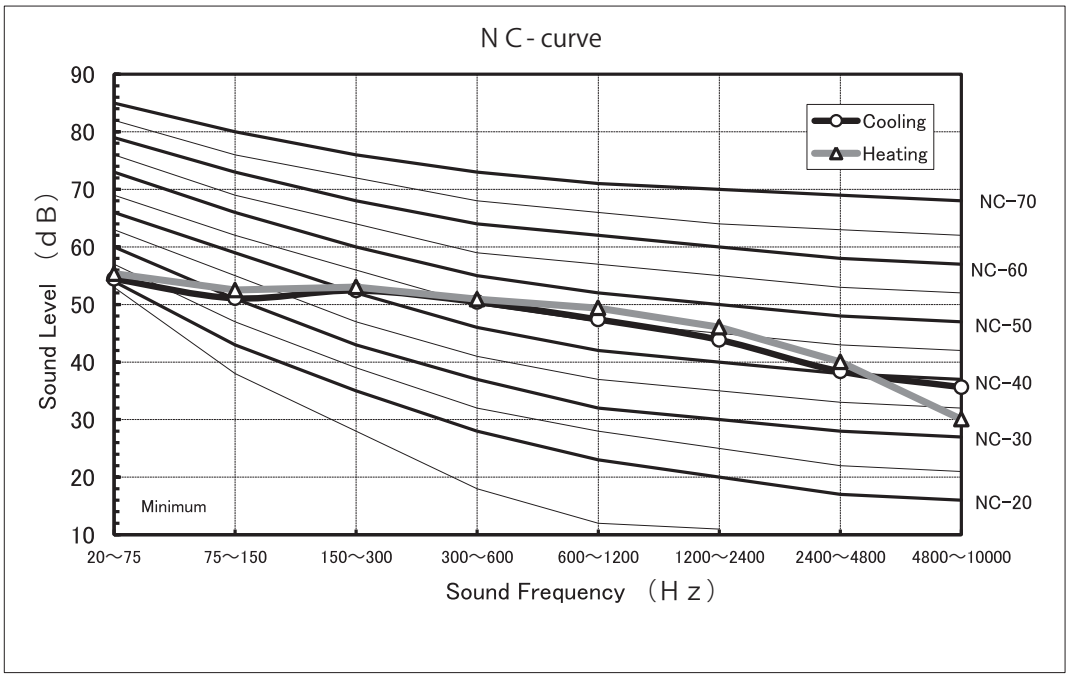

RAV-GM1401ATP-E/TR (*ATJP-E)

Measured point	Specification （d B）	Specification （d B）
	Cooling	Heating
Horizontal 1.0 m	55	**57**

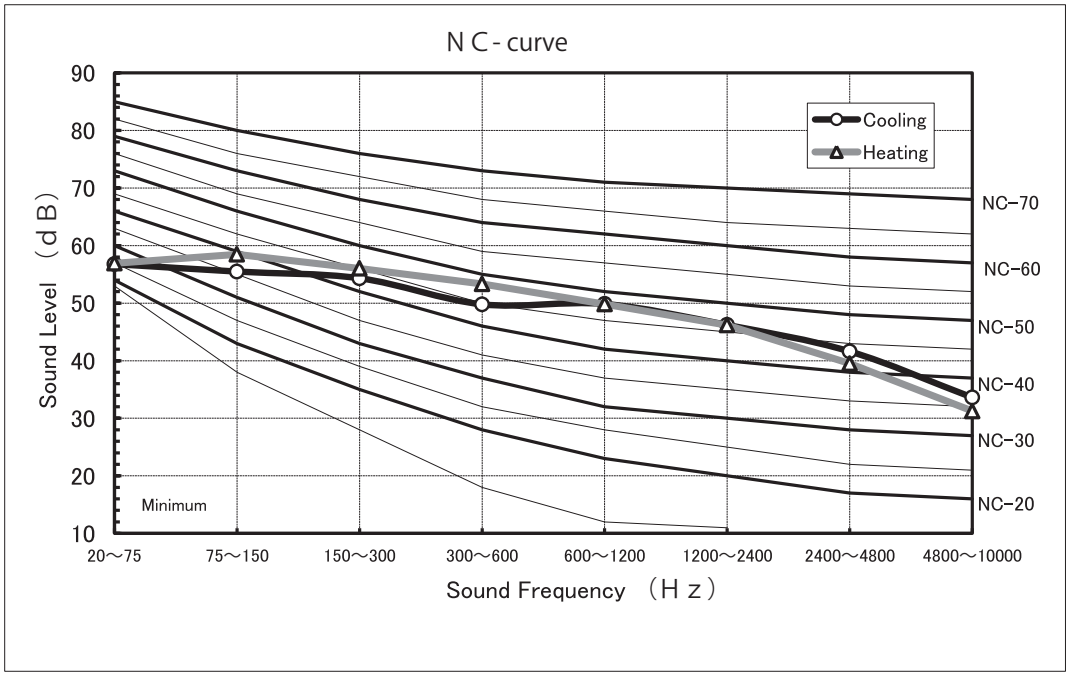

3-6. Connecting pipe length and lift difference between indoor units vs. capacity correction value

RAV-GM301ATP-E/TR (*ATJP-E)

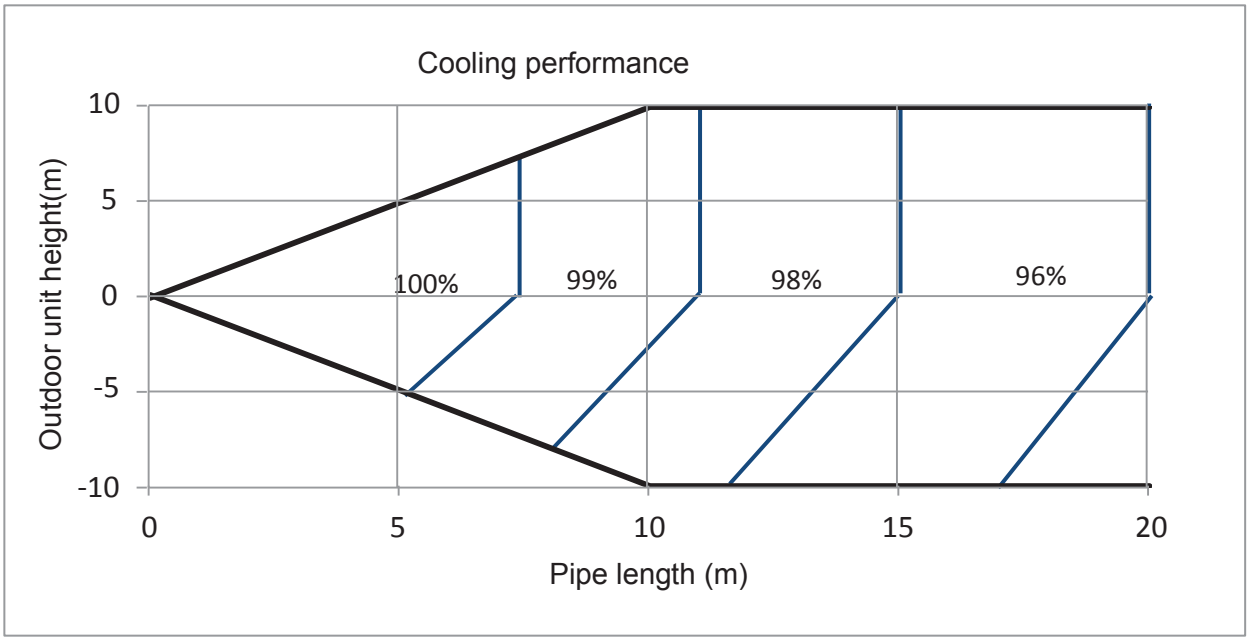

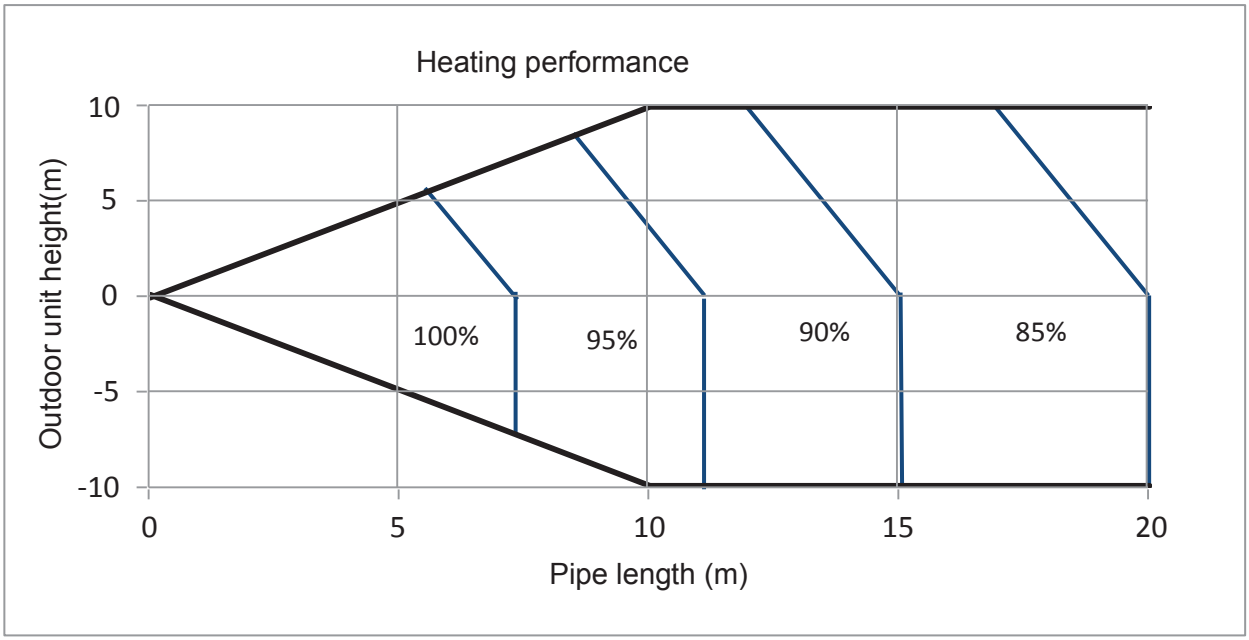

RAV-GM401ATP-E/TR (*ATJP-E)

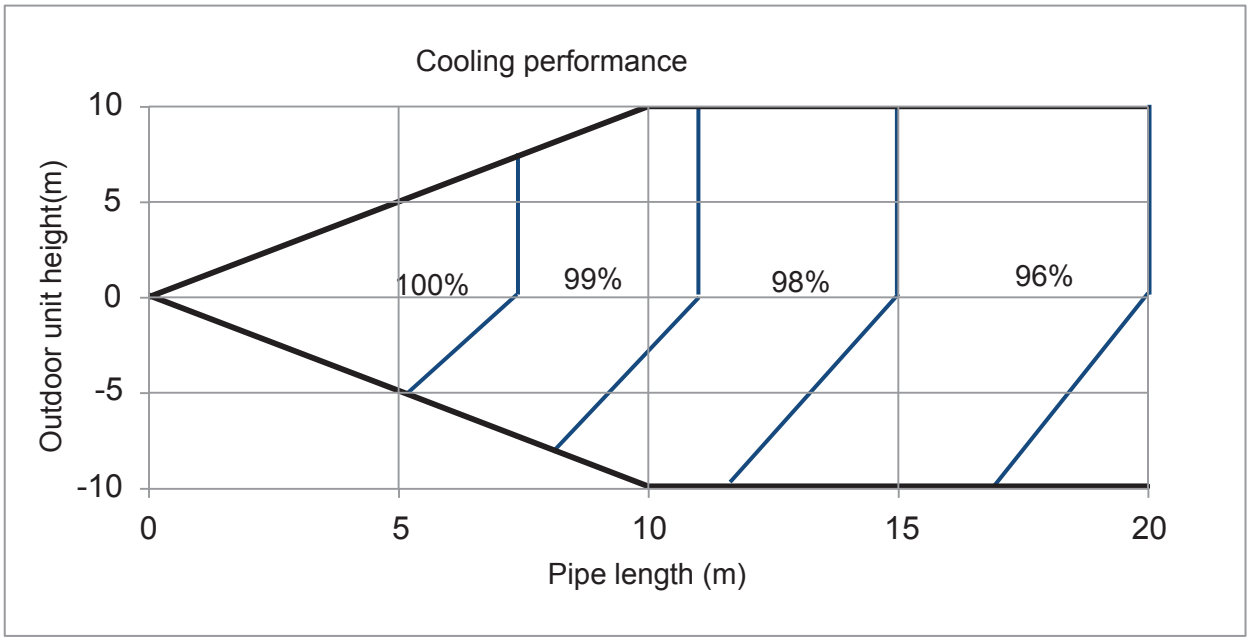

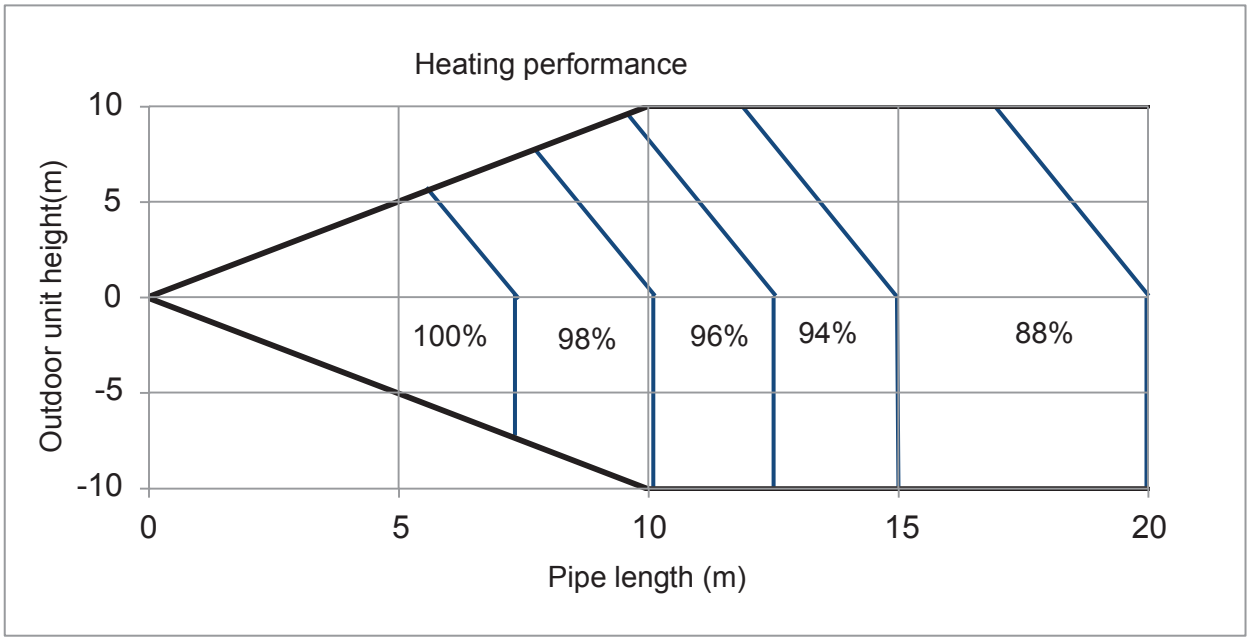

RAV-GM561ATP-E1/TR1 (*ATJP-E)

[Cooling]

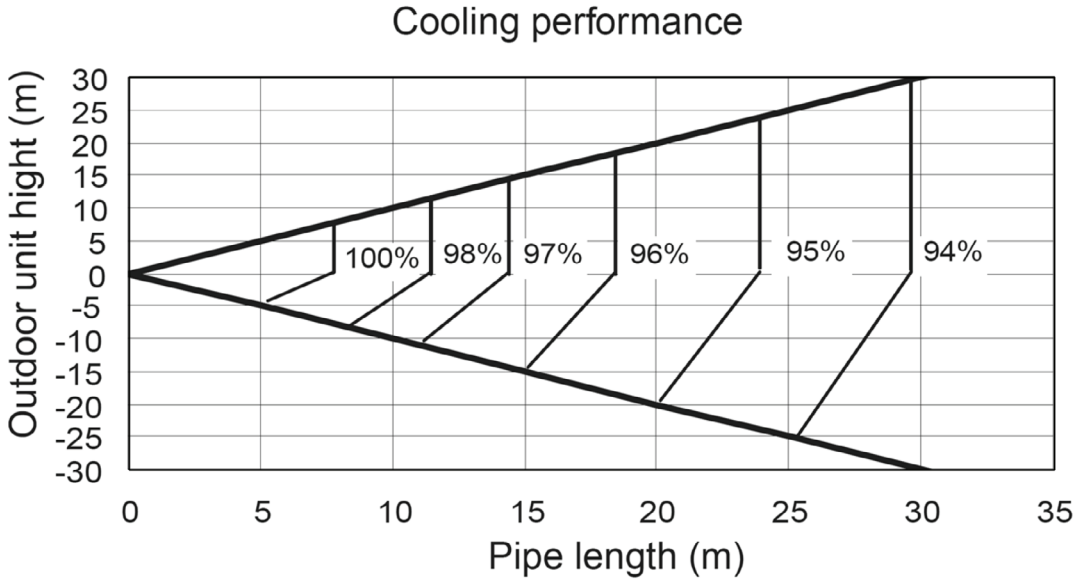

[Heating]

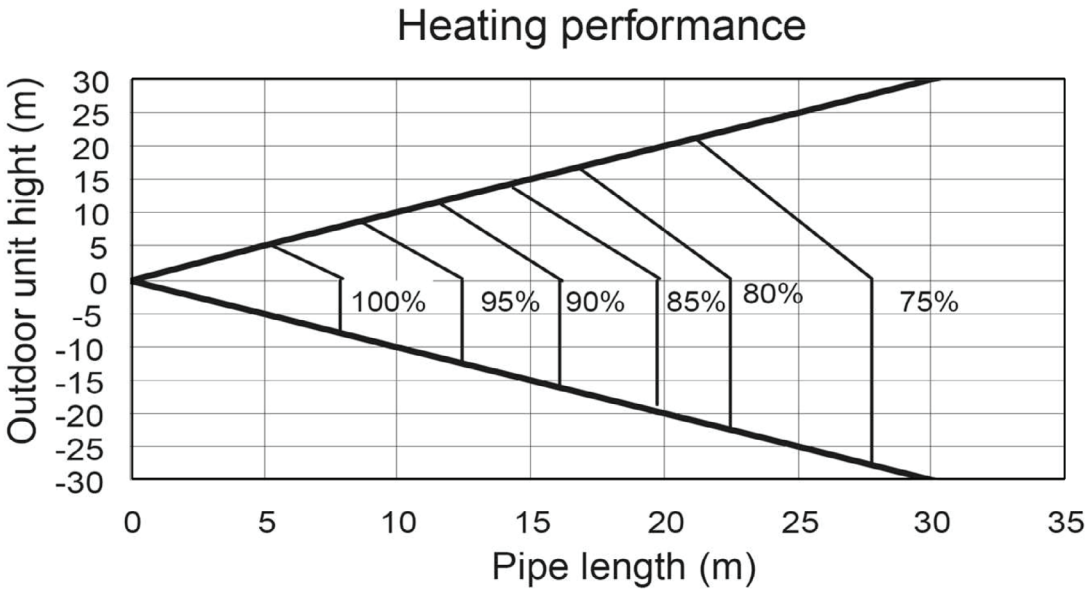

RAV-GM801ATP-E/TR (*ATJP-E)

[Cooling]

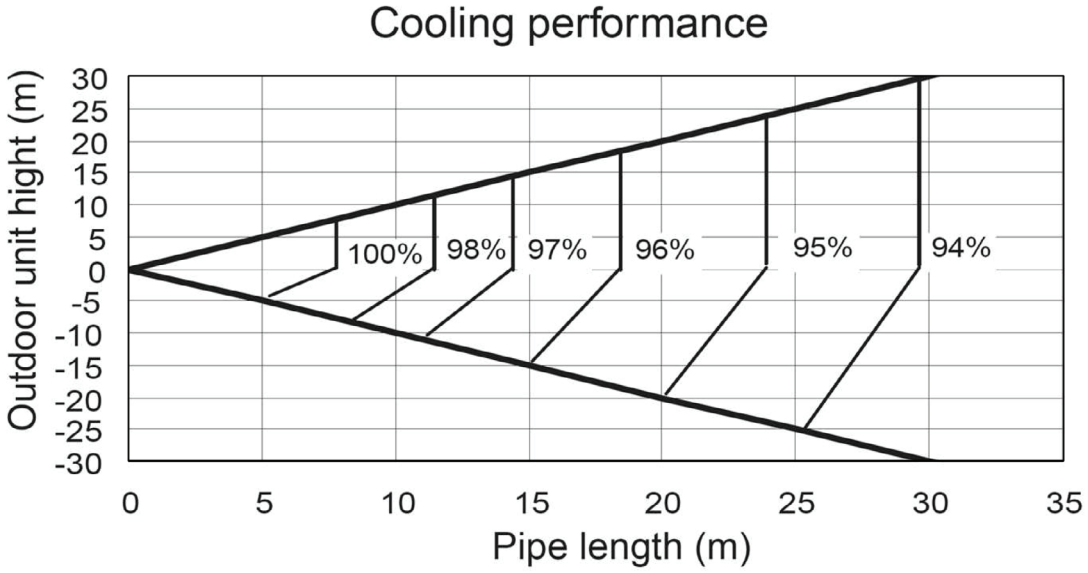

[Heating]

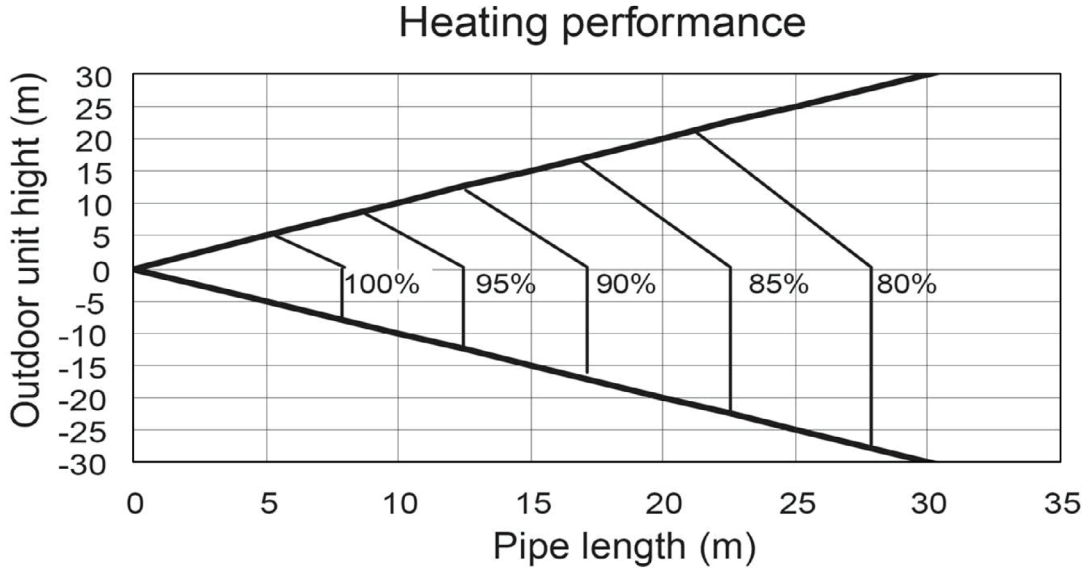

RAV-GM1101ATP-E/TR, RAV-GM1401ATP-E/TR (*ATJP-E)

[Cooling]

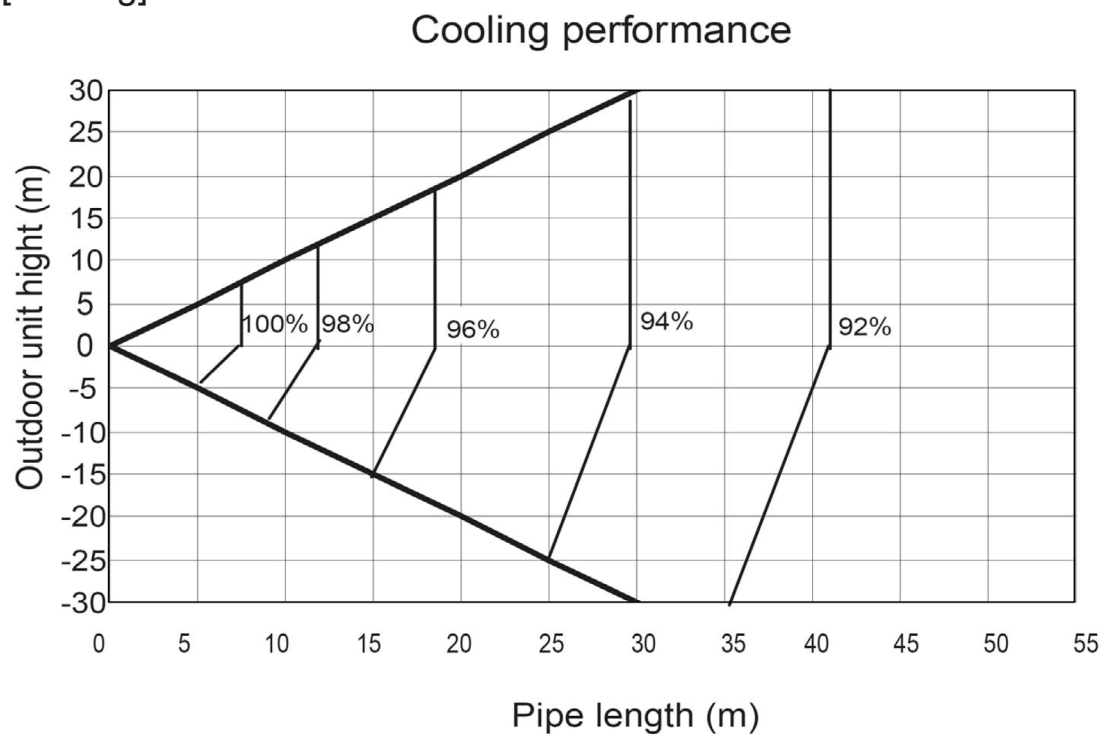

[Heating]

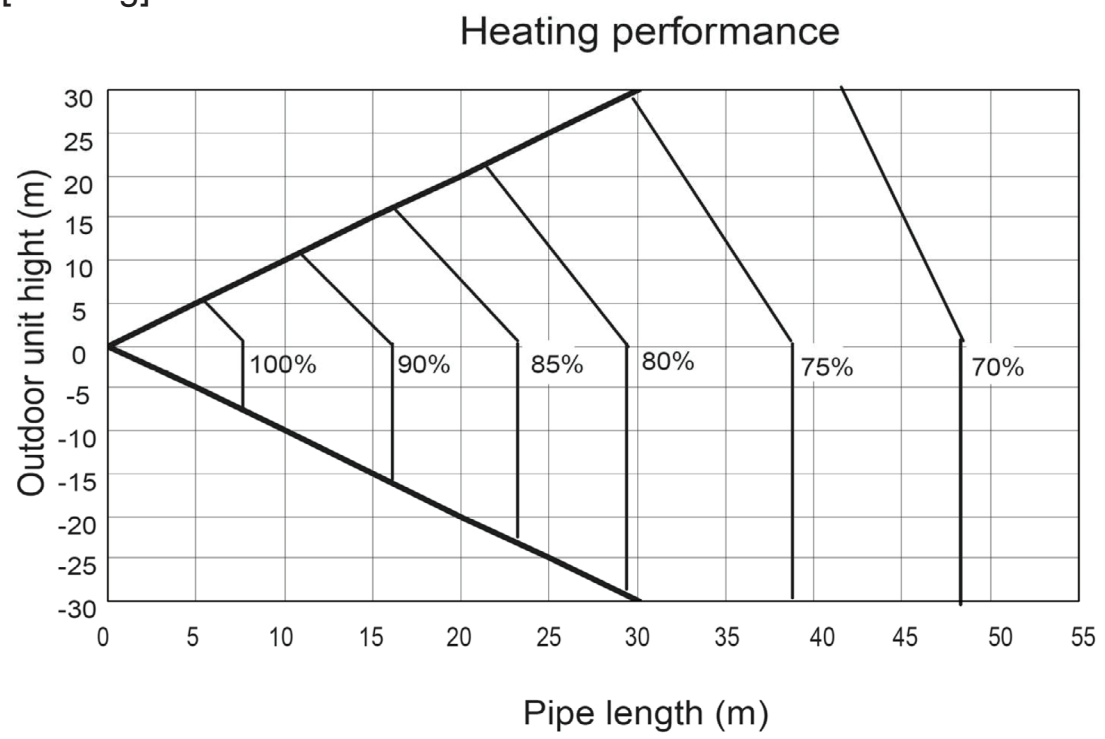

4. Optional Accessoeries

4.1 Accessories

Accessory Parts List		4-way Cassette	Compact 4-way	Slim duct	Standard duct	Ceiling	High wall	
		series 1	series 1	series 1	series 1	series 1	series 1	
		RAV-HM**1UTP-E/-TR	RAV-HM**1MUTP-E/-TR	RAV-HM**1SDT-E/-TR	RAV-HM**1BTP-E/-TR	RAV-HM**1CTP-E/-TR	RAV-HM**1KRTP-E/-TR	RAV-HM**1KRSP-E/-TR
Wired Remote Controller	RBC-AMS51E-EN,ES	OK	OK	OK	OK	OK	OK	OK
	RBC-AMS55E-EN, ES	OK	OK	OK	OK	OK	OK	OK
	RBC-AMS41E	OK	OK	OK	OK	OK	OK	OK
	RBC-AMT32E	OK	OK	OK	OK	OK	OK	OK
	RBC-AS41E	OK	OK	OK	OK	OK	OK	OK
	RBC-ASCU11-E		OK					
	RBC-AMTU31-E		OK					
	RBC-AWSU52-E		OK					
	RBC-AMSU52-E		OK					
Wireless Remote Controller	RBC-AXU31UM-E		OK					
	RBC-AXU31UMP-E		OK					
	RBC-AXU31UMPB-E		OK					
	TCB-AX32E2	OK	OK	OK	OK	OK		
	RBC-AX32U(W)-E	OK						
	RBC-AX33CE					OK		
Schedule Timer	TCB-EXS21TLE	OK	OK	OK	OK	OK	OK	OK
TCC-Link adaptor	TCB-PCNT30TLE2	OK	OK	OK	OK	OK		
Ceiling Panel	RBC-UM21-E		OK					
	RBC-UM21P-E		OK					
	RBC-UM21PB-E		OK					
	RBC-U31PGP(W)-E	OK						
Occupancy Sensor	TCB-SIR41UM-E		OK					
	TCB-SIR41UMP-E		OK					
Fresh air filter chamber	TCB-GFC1602UE	OK						
Spacer for height adjustment	TCB-SP1602UE	OK						
Air discharge direction kit	TCB-BC1602UE	OK						
Auxiliary fresh air flange	TCB-FF101URE2	OK	OK	OK				
Optional connecting kit	TCB-PCUC2E					OK		
Spigot shaped flange	TCB-SF56C6BPE, TCB-SF80C6BPE, TCB-SF160C6BPE				OK			
Application control kit	TCB-PCOS1E2		OK	OK	OK	OK		
Optional connector table (Peak-cut control/Night operation	TCB-KBOS4E	OK	OK	OK	OK	OK		

4.2 Controller

Parts name	Model name	Used with
Wired remote controller	RBC-AMS51E-EN, ES	All indoor Units
	RBC-AMS55E-EN, ES	
	RBC-AMS41E	
	RBC-AMT32E	
	RBC-AS41E	
Simple wired controller	RBC-AS21E2	All indoor units
Wireless remote controller	RBC-AX32UM (W)-E	Compact 4-way
	TCB-AX32E2	All indoor Units
	RBC-AX32U(W)-E	4-way Cassette
	RBC-AX33CE	Under Ceiling
Schedule timer	TCB-EXS21TLE	Wired remote controller
ON-OFF controller	TCB-CC163TLE2	Wired remote controller/Central remote controller
Central controller	BMS-CM1280TLE	All indoor units
1:1 model connection interface	TCB-PCNT30TLE2	4 way cassette type / Compact 4-way cassette type / Ducted type Slim Duct type / Ceiling type / High wall type
Terminal box	TCB-PX30MUE	Used with TCB-PCNT30TLE2
		4-way cassette (4 series) type

Energy Save operation (RBC-AMS54/55E-EN/ES)
The method to control power consumption by limiting the peak of the compressor's electric current.
= To control peak current by limiting **% of the current release

		FCU only function	Combination function with CDU		
			DI R32		
		Linked with A2A HEX by TCC link*1	Energy save operation (Limit the peak of electric current)	Night Operation by only New Controller *2	Frost Protection (8°C set temp. in heating mode)
4-way cassette type	RAV-HM**1UTP-E/TP	×	○	×	×
Compact 4-way cassette type	RAV-HM**1MU T-E/TP	OK	○	×	×
Standard duct	RAV-HM**1BTP- E/TP	OK	○	×	×
Slim Duct	RAV-HM**1SDT-E/TP	×	○	×	×
Ceiling type	RAV-HM**1CTP- E/TP	OK	○	×	×
High Wall type	RAV-HM**1KRTP -E/TP	×	○	×	×
	RAV-HM**1KRSP -E/TP	×	○	×	×

*1) A2A HEX: VN-M**HE
*2) New Controller : RBC-AMS54/55E-EN/ES
*3) Only 75% :Even if save ratio is set over 50%, the save operation will be 75% automatically

	RBC-AMS54/55E-EN/ES	RBC-AMT32E/RBC-AMS41E
○	0%, 50%, Option (Only 75%)*3	Option (Only 75%)*3
×	NA	NA

Appendix

Specifications for ErP Lot-10

Digital Inverter < Series 1> 1 phase

No	Outdoor unit type	Connection type	HP	Indoor unit		Outdoor unit		Rated Capacity (kW)		Specification					
				Model name	Qty	Model name	Qty	Cooling	Heating	SEER	Energy Label	PdesignC	SCOP (average)	Energy Label	Pdesignh (average)
1	DI	Single	1.0	RAV-HM301MUTP-E	1	RAV-GM301ATP-E	1	2.5	3.4	5.94	**A+**	2.5	4.70	A++	2.3
2	DI	Single	1.0	RAV-HM301SDT-E	1	RAV-GM301ATP-E	1	2.5	3.4	6.29	A++	2.5	4.60	**A++**	2.6
3	DI	Single	1.0	RAV-HM301KRTP-E	1	RAV-GM301ATP-E	1	2.5	3.4	6.36	A++	2.5	4.10	A+	2.6
4	DI	Single	1.5	RAV-HM401MUTP-E	1	RAV-GM401ATP-E	1	3.6	4.0	5.76	**A+**	3.6	4.44	A+	2.7
5	DI	Single	1.5	RAV-HM401SDT-E	1	RAV-GM401ATP-E	1	3.6	4.0	5.86	**A+**	3.6	4.01	**A+**	2.7
6	DI	Single	1.5	RAV-HM401CTP-E	1	RAV-GM401ATP-E	1	3.6	4.0	6.34	**A++**	5.0	5.10	**A+++**	2.7
7	DI	Single	1.5	RAV-HM401KRTP-E	1	RAV-GM401ATP-E	1	3.6	4.0	6.12	A++	3.6	4.22	A+	2.7
8	DI	Single	2.0	RAV-HM561UTP-E	1	RAV-GM561ATP-E1	1	5.0	5.3	6.34	A++	5.0	4.60	**A++**	2.8
9	DI	Single	2.0	RAV-HM561MUTP-E	1	RAV-GM561ATP-E1	1	5.0	5.3	5.69	**A+**	5.0	4.37	A+	2.8
10	DI	Single	2.0	RAV-HM561BTP-E	1	RAV-GM561ATP-E1	1	5.0	5.3	5.28	A	5.0	4.08	**A+**	2.8
11	DI	Single	2.0	RAV-HM561SDT-E	1	RAV-GM561ATP-E1	1	5.0	5.3	5.14	**A**	5.0	4.16	A+	2.8
12	DI	Single	2.0	RAV-HM561CTP-E	1	RAV-GM561ATP-E1	1	5.0	5.3	5.50	A	5.0	4.32	A+	2.8
13	DI	Single	2.0	RAV-HM561KRTP-E	1	RAV-GM561ATP-E1	1	5.0	5.3	6.19	A++	5.0	4.00	A+	2.8
14	DI	Single	3.0	RAV-HM801UTP-E	1	RAV-GM801ATP-E	1	6.7	7.7	5.81	A+	6.7	4.42	A+	5.1
15	DI	Single	3.0	RAV-HM801BTP-E	1	RAV-GM801ATP-E	1	6.7	7.7	5.20	A	6.7	4.13	**A+**	5.1
16	DI	Single	3.0	RAV-HM801CTP-E	1	RAV-GM801ATP-E	1	6.9	7.7	5.62	A+	6.9	4.21	A+	5.1
17	DI	Single	3.0	RAV-HM801KRTP-E	1	RAV-GM801ATP-E	1	6.7	7.7	5.73	A+	6.7	4.01	A+	5.1
18	DI	Single	4.0	RAV-HM1101UTP-E	1	RAV-GM1101ATP-E	1	9.5	11.2	6.15	**A++**	9.5	4.28	A+	8.0
19	DI	Single	4.0	RAV-HM1101BTP-E	1	RAV-GM1101ATP-E	1	9.5	11.2	5.28	A	9.5	4.19	A+	7.6
20	DI	Single	4.0	RAV-HM1101CTP-E	1	RAV-GM1101ATP-E	1	9.5	11.2	5.86	A+	9.5	4.27	A+	7.6
21	DI	Twin	4.0	RAV-HM561UTP-E	2	RAV-GM1101ATP-E	1	9.5	11.2	5.94	A+	9.5	4.28	A+	8.0
22	DI	Twin	4.0	RAV-HM561MUTP-E	2	RAV-GM1101ATP-E	1	9.5	11.2	5.50	A	9.5	4.02	A+	7.4
23	DI	Twin	4.0	RAV-HM561BTP-E	2	RAV-GM1101ATP-E	1	9.5	11.2	5.28	A	9.5	4.22	A+	7.6
24	DI	Twin	4.0	RAV-HM561SDT-E	2	RAV-GM1101ATP-E	1	9.5	11.2	5.32	**A**	9.5	4.19	A+	7.4
25	DI	Twin	4.0	RAV-HM561CTP-E	2	RAV-GM1101ATP-E	1	9.5	11.2	5.85	A+	9.5	4.28	A+	7.6
26	DI	Twin	4.0	RAV-HM561KRTP-E	2	RAV-GM1101ATP-E	1	9.5	11.2	5.32	A	9.5	4.19	A+	7.6
27	DI	Single	5.0	RAV-HM1401UTP-E	1	RAV-GM1401ATP-E	1	12.0	13.0	5.71	**A+**	12.0	4.29	A+	8.0
28	DI	Single	5.0	RAV-HM1401BTP-E	1	RAV-GM1401ATP-E	1	12.1	13.0	5.36	-	12.1	4.19	-	7.6
29	DI	Single	5.0	RAV-HM1401CTP-E	1	RAV-GM1401ATP-E	1	12.1	13.0	5.36	-	12.1	4.19	-	7.6
30	DI	Twin	5.0	RAV-HM801UTP-E	2	RAV-GM1401ATP-E	1	12.0	13.0	5.57	A	12.0	4.29	A+	8.0
31	DI	Twin	5.0	RAV-HM801BTP-E	2	RAV-GM1401ATP-E	1	12.1	13.0	5.36	-	12.1	4.21	-	7.6
32	DI	Twin	5.0	RAV-HM801CTP-E	2	RAV-GM1401ATP-E	1	12.1	13.0	5.36	-	12.1	4.19	-	7.6
33	DI	Twin	5.0	RAV-HM801KRTP-E	2	RAV-GM1401ATP-E	1	12.1	13.0	5.24	-	12.1	4.19	-	8.0

* ErP Lot 10

In Europe the nominal efficiency method is becoming outdated.

The Seasonal Energy Efficiency Ratio (SEER) and the Seasonal Coefficient Of Performance (SCOP) will be introducted. The SEER/SCOP measuring method is more reliable and better represent the performance of the units during the year. Instead of a single reference temperature condition, with this new method the air conditioning systems are evaluated at different operating conditions (partial load); where Toshiba inverter units are known for being extremely efficient.

The SEER/SCOP measurement applies only to air conditioners in single or multi split combinations with a cooling capacity below 12kW.

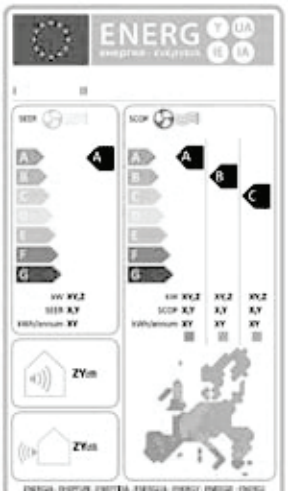

Energy Efficiency Class	SEER	SCOP
A+++	SEER ≥ 8.50	SCOP ≥ 5.10
A++	6.10 ≤ SEER < 8.50	4.60 ≤ SCOP < 5.10
A+	5.60 ≤ SEER < 6.10	4.00 ≤ SCOP < 4.60
A	5.10 ≤ SEER < 5.60	3.40 ≤ SCOP < 4.00
B	4.60 ≤ SEER < 5.10	3.10 ≤ SCOP < 3.40
C	4.10 ≤ SEER < 4.60	2.80 ≤ SCOP < 3.10
D	3.60 ≤ SEER < 4.10	2.50 ≤ SCOP < 2.80
E	3.10 ≤ SEER < 3.60	2.20 ≤ SCOP < 2.50
F	2.60 ≤ SEER < 3.10	1.90 ≤ SCOP < 2.20
G	SEER < 2.60	SCOP < 1.90

Specifications for Turkey Lot-10

Digital Inverter < Series 1> 1 phase

No	Outdoor unit type	Connection type	HP	Indoor unit		Outdoor unit		Rated Capacity (kW)		Specification					
				Model name	Qty	Model name	Qty	Cooling	Heating	SEER	Energy Label	PdesignC	SCOP (average)	Energy Label	Pdesignh (average)
1	DI	Single	1.0	RAV-HM301MUT-TR	1	RAV-GM301ATP-TR	1	2.5	3.4	5.94	**A+**	2.5	4.70	A++	2.3
2	DI	Single	1.0	RAV-HM301SDT-TR	1	RAV-GM301ATP-TR	1	2.5	3.4	6.29	A++	2.5	4.60	**A++**	2.6
3	DI	Single	1.0	RAV-HM301KRTP-TR	1	RAV-GM301ATP-TR	1	2.5	3.4	6.36	A++	2.5	4.10	A+	2.6
4	DI	Single	1.5	RAV-HM401MUT-TR	1	RAV-GM401ATP-TR	1	3.6	4.0	5.76	**A+**	3.6	4.44	A+	2.7
5	DI	Single	1.5	RAV-HM401SDT-TR	1	RAV-GM401ATP-TR	1	3.6	4.0	5.86	**A+**	3.6	4.01	**A+**	2.7
6	DI	Single	1.5	RAV-HM401CTP-TR	1	RAV-GM401ATP-TR	1	3.6	4.0	6.34	**A++**	5.0	5.10	**A+++**	2.7
7	DI	Single	1.5	RAV-HM401KRTP-TR	1	RAV-GM401ATP-TR	1	3.6	4.0	6.12	A++	3.6	4.22	A+	2.7
8	DI	Single	2.0	RAV-HM561UTP-TR	1	RAV-GM561ATP-TR1	1	5.0	5.3	6.34	A++	5.0	4.60	**A++**	2.8
9	DI	Single	2.0	RAV-HM561MUTP-TR	1	RAV-GM561ATP-TR1	1	5.0	5.3	5.69	**A+**	5.0	4.37	A+	2.8
10	DI	Single	2.0	RAV-HM561BTP-TR	1	RAV-GM561ATP-TR1	1	5.0	5.3	5.28	A	5.0	4.08	**A+**	2.8
11	DI	Single	2.0	RAV-HM561SDT-TR	1	RAV-GM561ATP-TR1	1	5.0	5.3	5.14	**A**	5.0	4.16	A+	2.8
12	DI	Single	2.0	RAV-HM561CTP-TR	1	RAV-GM561ATP-TR1	1	5.0	5.3	5.50	A	5.0	4.32	A+	2.8
13	DI	Single	2.0	RAV-HM561KRTP-TR	1	RAV-GM561ATP-TR1	1	5.0	5.3	6.19	A++	5.0	4.00	A+	2.8
14	DI	Single	3.0	RAV-HM801UTP-TR	1	RAV-GM801ATP-TR	1	6.7	7.7	5.81	A+	6.7	4.42	A+	5.1
15	DI	Single	3.0	RAV-HM801BTP-TR	1	RAV-GM801ATP-TR	1	6.7	7.7	5.20	A	6.7	4.13	**A+**	5.1
16	DI	Single	3.0	RAV-HM801CTP-TR	1	RAV-GM801ATP-TR	1	6.9	7.7	5.62	A+	6.9	4.21	A+	5.1
17	DI	Single	3.0	RAV-HM801KRTP-TR	1	RAV-GM801ATP-TR	1	6.7	7.7	5.73	A+	6.7	4.01	A+	5.1
18	DI	Single	4.0	RAV-HM1101UTP-TR	1	RAV-GM1101ATP-TR	1	9.5	11.2	6.15	**A++**	9.5	4.28	A+	8.0
19	DI	Single	4.0	RAV-HM1101BTP-TR	1	RAV-GM1101ATP-TR	1	9.5	11.2	5.28	A	9.5	4.19	A+	7.6
20	DI	Single	4.0	RAV-HM1101CTP-TR	1	RAV-GM1101ATP-TR	1	9.5	11.2	5.86	A+	9.5	4.27	A+	7.6
21	DI	Twin	4.0	RAV-HM561UTP-TR	2	RAV-GM1101ATP-TR	1	9.5	11.2	5.94	A+	9.5	4.28	A+	8.0
22	DI	Twin	4.0	RAV-HM561MUTP-TR	2	RAV-GM1101ATP-TR	1	9.5	11.2	5.50	A	9.5	4.02	A+	7.4
23	DI	Twin	4.0	RAV-HM561BTP-TR	2	RAV-GM1101ATP-TR	1	9.5	11.2	5.28	A	9.5	4.22	A+	7.6
24	DI	Twin	4.0	RAV-HM561SDT-TR	2	RAV-GM1101ATP-TR	1	9.5	11.2	5.32	**A**	9.5	4.19	A+	7.4
25	DI	Twin	4.0	RAV-HM561CTP-TR	2	RAV-GM1101ATP-TR	1	9.5	11.2	5.85	A+	9.5	4.28	A+	7.6
26	DI	Twin	4.0	RAV-HM561KRTP-TR	2	RAV-GM1101ATP-TR	1	9.5	11.2	5.32	A	9.5	4.19	A+	7.6
27	DI	Single	5.0	RAV-HM1401UTP-TR	1	RAV-GM1401ATP-TR	1	12.0	13.0	5.71	**A+**	12.0	4.29	A+	8.0
28	DI	Single	5.0	RAV-HM1401BTP-TR	1	RAV-GM1401ATP-TR	1	12.1	13.0	5.36	-	12.1	4.19	-	7.6
29	DI	Single	5.0	RAV-HM1401CTP-TR	1	RAV-GM1401ATP-TR	1	12.1	13.0	5.36	-	12.1	4.19	-	7.6
30	DI	Twin	5.0	RAV-HM801UTP-TR	2	RAV-GM1401ATP-TR	1	12.0	13.0	5.57	A	12.0	4.29	A+	8.0
31	DI	Twin	5.0	RAV-HM801BTP-TR	2	RAV-GM1401ATP-TR	1	12.1	13.0	5.36	-	12.1	4.21	-	7.6
32	DI	Twin	5.0	RAV-HM801CTP-TR	2	RAV-GM1401ATP-TR	1	12.1	13.0	5.36	-	12.1	4.19	-	7.6
33	DI	Twin	5.0	RAV-HM801KRTP-TR	2	RAV-GM1401ATP-TR	1	12.1	13.0	5.24	-	12.1	4.19	-	8.0

* ErP Lot 10
In Europe the nominal efficiency method is becoming outdated.
The Seasonal Energy Efficiency Ratio (SEER) and the Seasonal Coefficient Of Performance (SCOP) will be introducted. The SEER/SCOP measuring method is more reliable and better represent the performance of the units during the year. Instead of a single reference temperature condition, with this new method the air conditioning systems are evaluated at different operating conditions (partial load); where Toshiba inverter units are known for being extremely efficient.

The SEER/SCOP measurement applies only to air conditioners in single or multi split combinations with a cooling capacity below 12kW.

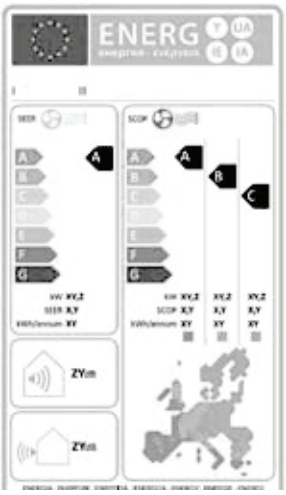

Energy Efficiency Class	SEER	SCOP
A+++	SEER ≥ 8.50	SCOP ≥ 5.10
A++	6.10 ≤ SEER < 8.50	4.60 ≤ SCOP < 5.10
A+	5.60 ≤ SEER < 6.10	4.00 ≤ SCOP < 4.60
A	5.10 ≤ SEER < 5.60	3.40 ≤ SCOP < 4.00
B	4.60 ≤ SEER < 5.10	3.10 ≤ SCOP < 3.40
C	4.10 ≤ SEER < 4.60	2.80 ≤ SCOP < 3.10
D	3.60 ≤ SEER < 4.10	2.50 ≤ SCOP < 2.80
E	3.10 ≤ SEER < 3.60	2.20 ≤ SCOP < 2.50
F	2.60 ≤ SEER < 3.10	1.90 ≤ SCOP < 2.20
G	SEER < 2.60	SCOP < 1.90

CARRIER AIR CONDITIONING (THAILAND) CO.,LTD

144/9 Moo 5, Bangkadi Industrial Park, Tivanon Road, Tambol Bangkadi,
Amphur Muang, Pathumthani 12000, Thailand
Copyright © 2024 CARRIER AIR CONDITIONING (THAILAND) CO.,LTD All Rights Reserved

Revision : 05 / 241015