40 CD

GEWISS

CE

NF C61-910

	13DIN	26DIN	39DIN	52DIN
	GW 40 501 250x225x93,5 13M	**GW 40 502** 250x350x93,5 26M	**GW 40 503** 250x475x93,5 39M	**GW 40 504** 250x600x93,5 52M
	GW 40 516 250x225x50	**GW 40 517** 250x350x50	**GW 40 518** 250x475x50	**GW 40 519** 250x600x50
	GW 40 531 250x225x34	**GW 40 532** 250x350x34	**GW 40 533** 250x475x34	**GW 40 534** 250x600x34
	GW 40 536 250x225x34	**GW 40 537** 250x350x34	**GW 40 538** 250x475x34	**GW 40 539** 250x600x34
	GW 40 526 156x216x2	**GW 40 527** 156x341x2	**GW 40 528** 156x466x2	**GW 40 529** 156x591x2
	GW 40 511 250x225x40 **GW 40 512** 250x225x55			
	GW 40 513 250x225x40 **GW 40 414** 250x225x55			

	GW 40 541 250x225x83,5		**GW 40 546**
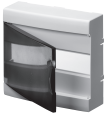	**GW 40 542** 250x225x83,5		**GW 40 422**
	GW 40 506 250x225x112	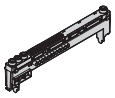	**GW 40 591** **GW 40 592**
	GW 40 530 244x219x2		**GW 40 593** **GW 40 594**

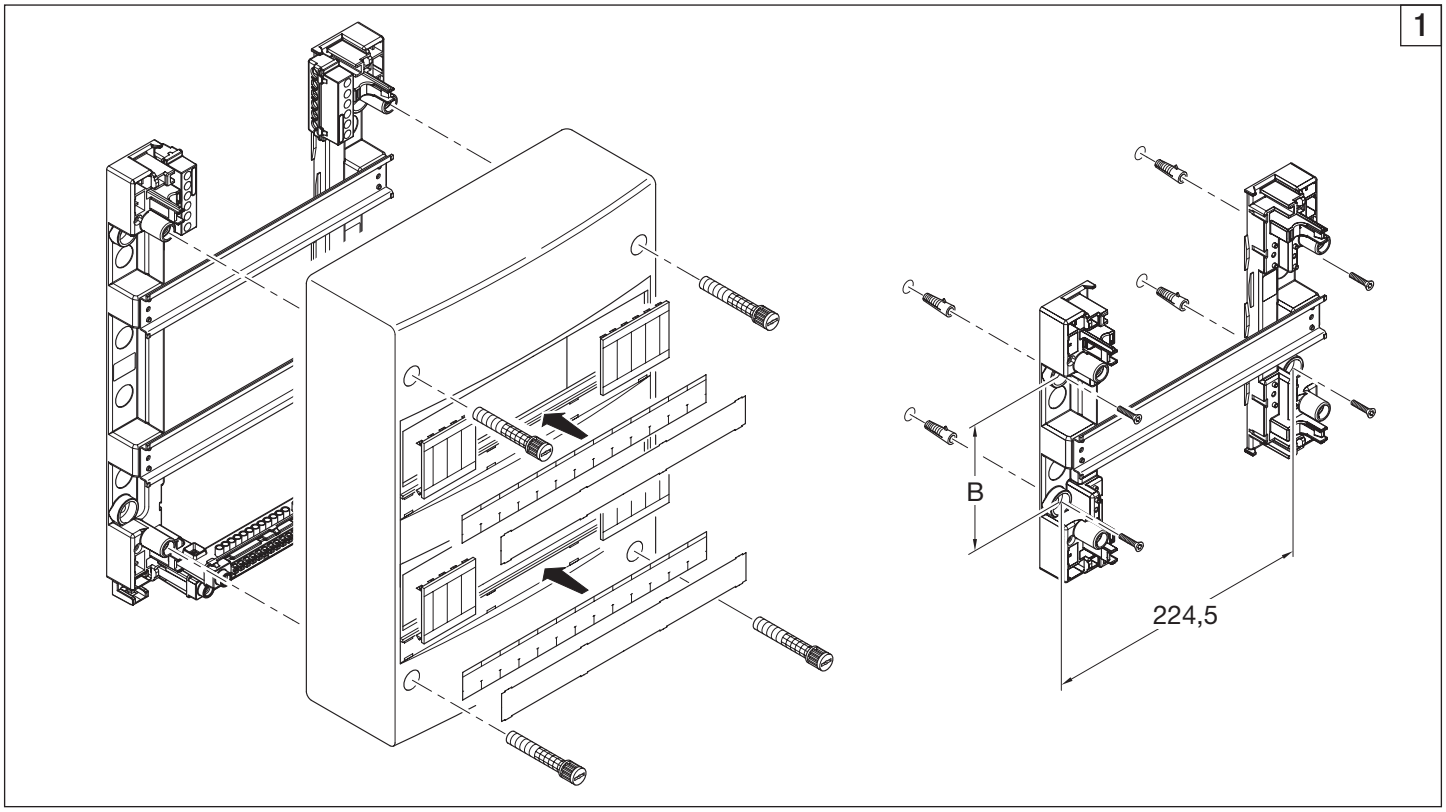
1
B
224,5

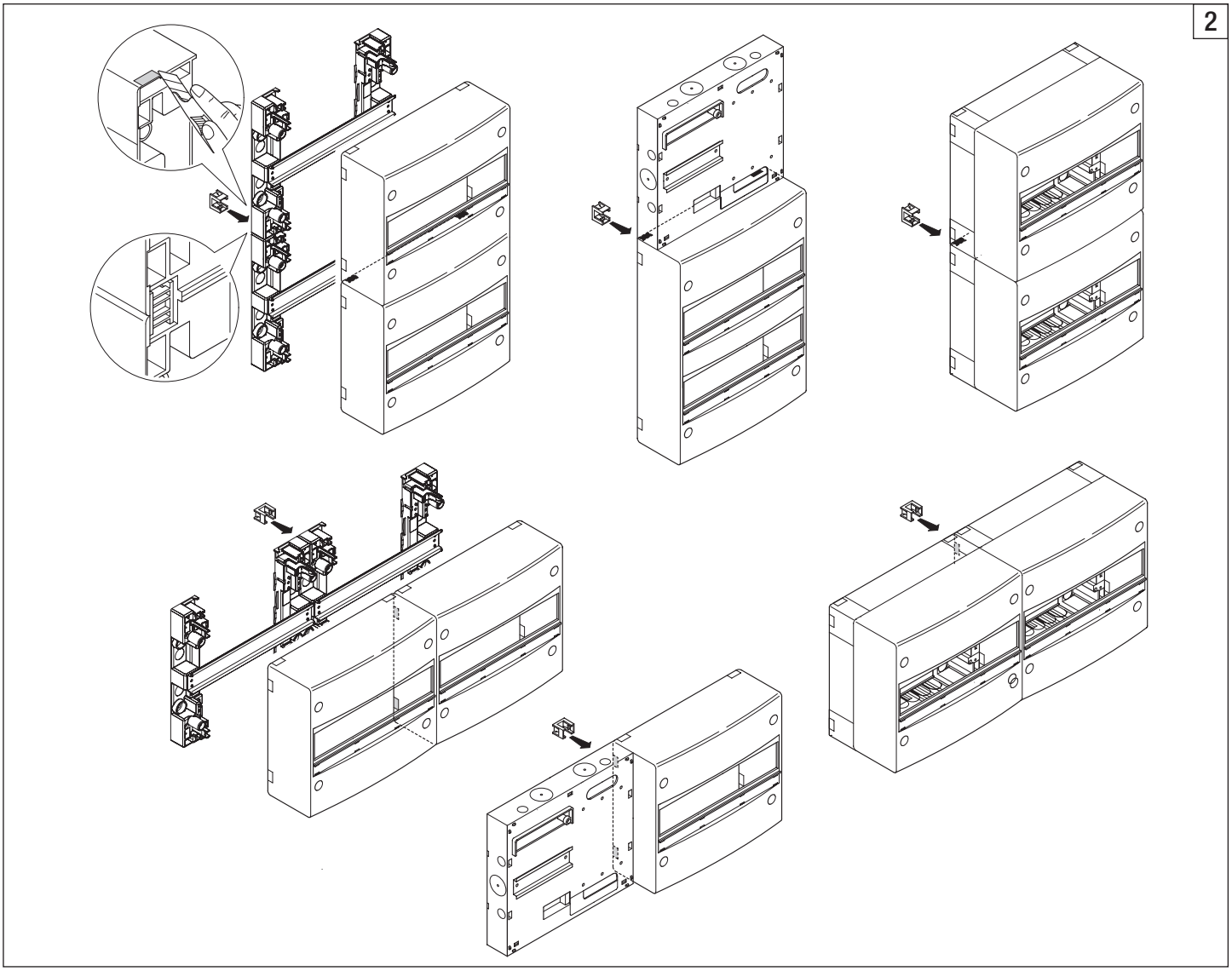
2

GW 40 593
(1x35)+(5x25mm²)

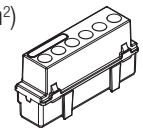

GW 40 594
(1x35)+(5x25mm²)

GW 40 591
(3x25)+(12x4mm²)

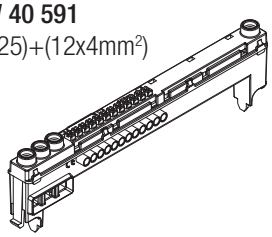

GW 40 592
(4x25)+(24x4mm²)

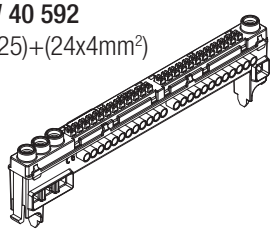

GW 40 501	GW 40 502
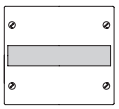 13M	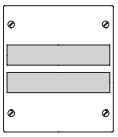 26M
T (3x25)+(12x4mm²)	T (4x25)+(24x4mm²) N (1x35)+(5x25mm²) L (1x35)+(5x25mm²)

GW 40 503	GW 40 504
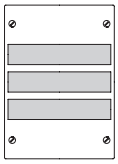 39M	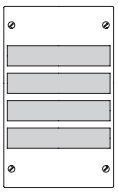 52M
T (7x25)+(36x4mm²) N (1x35)+(5x25mm²) L (1x35)+(5x25mm²)	T (8x25)+(48x4mm²) N (1x35)+(5x25mm²) L (1x35)+(5x25mm²)

3

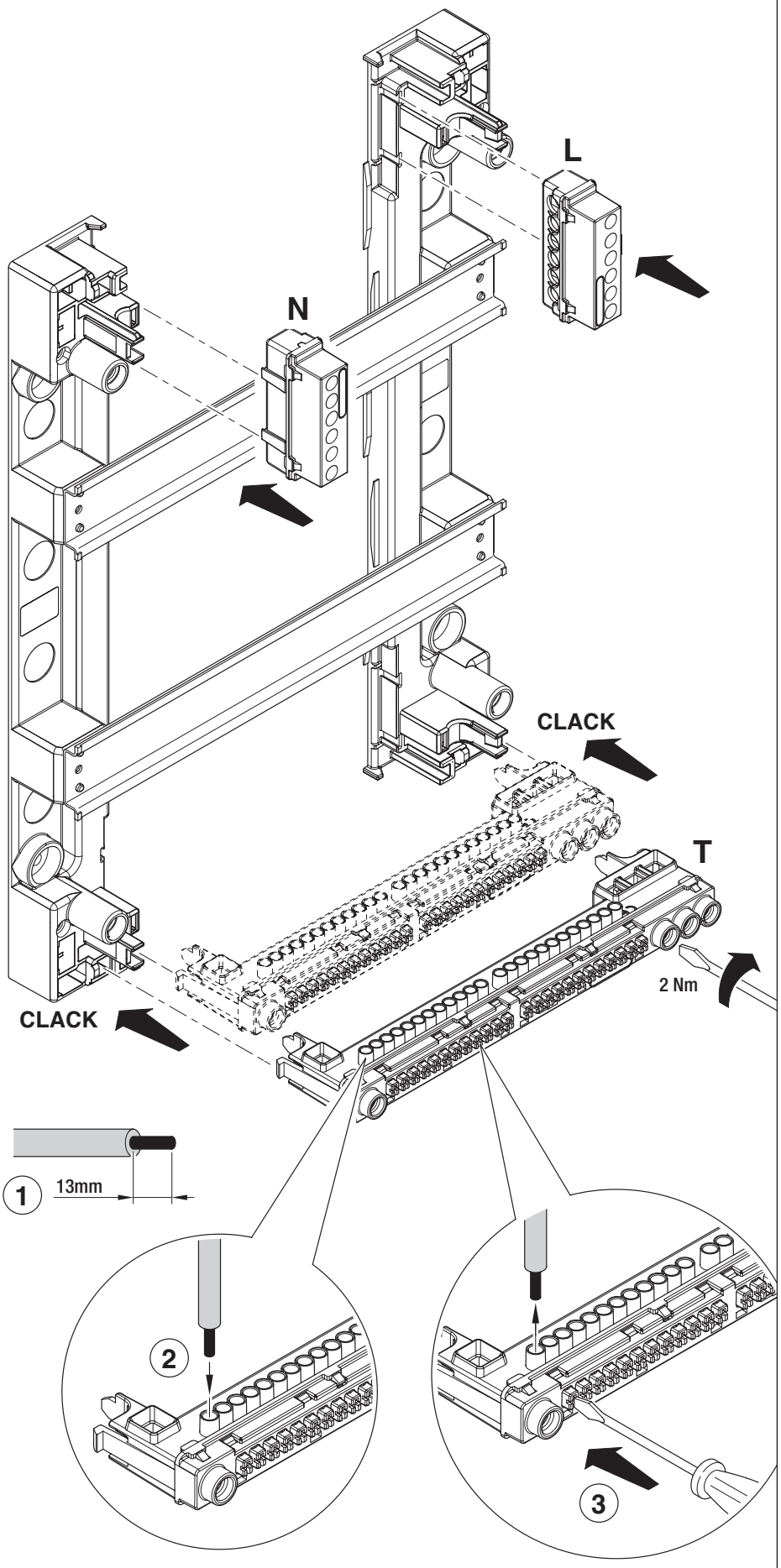

4

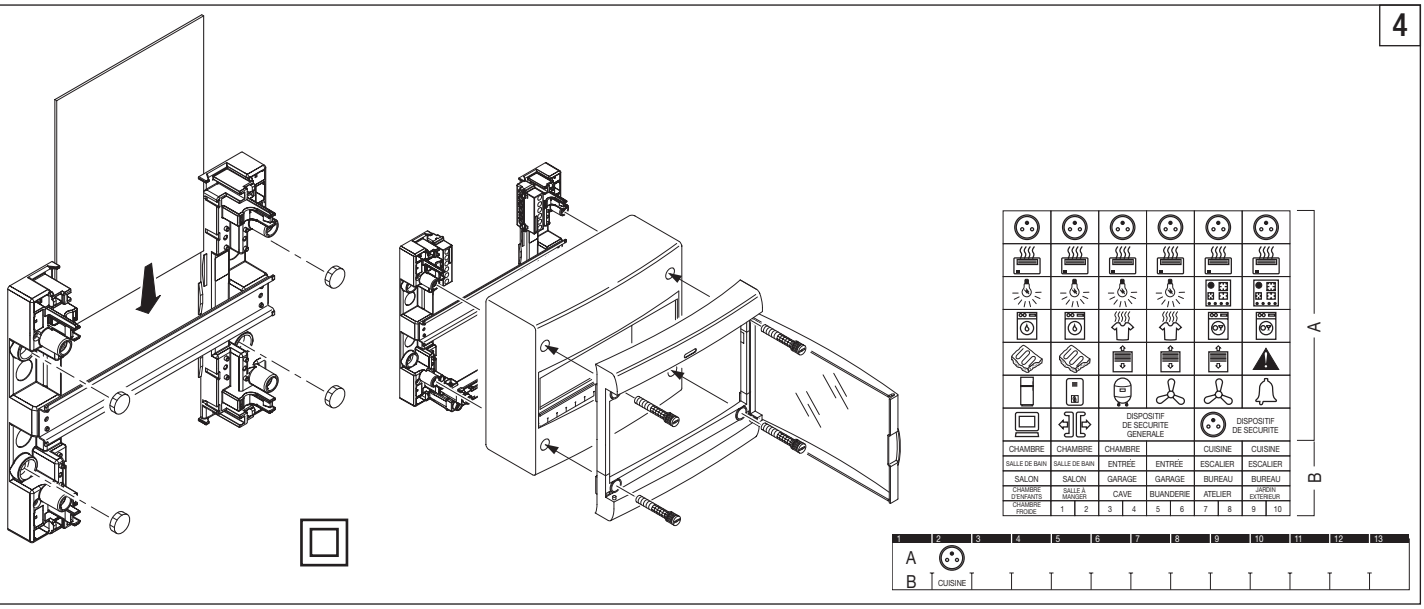

5

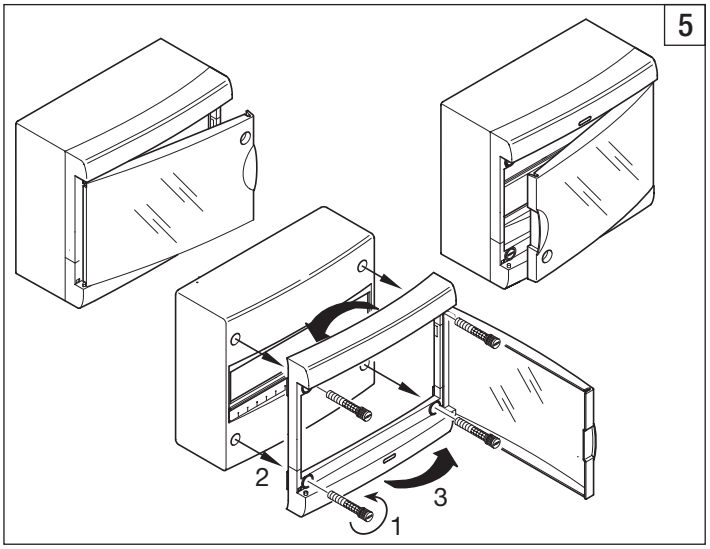

6

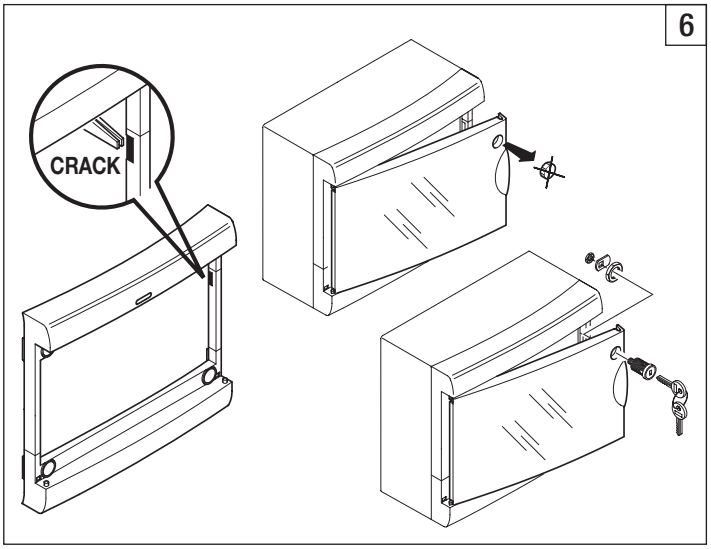

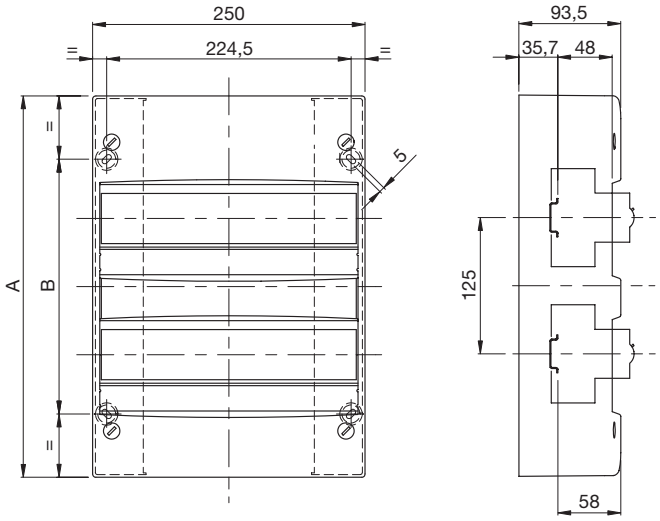

		A	B
13M	GW 40 501	225	109
26M	GW 40 502	350	234
39M	GW 40 503	475	359
52M	GW 40 504	600	484

Punto di contatto indicato in adempimento ai fini delle direttive e regolamenti UE applicabili:
Contact details according to the relevant European Directives and Regulations:
GEWISS S.p.A. Via D.Bosatelli, 1 IT-24069 Cenate Sotto (BG) Italy tel: +39 035 946 111 E-mail: qualitymarks@gewiss.com

According to applicable UK regulations, the company responsible for placing the goods in UK market is:
GEWISS UK LTD - Unity House, Compass Point Business Park, 9 Stocks Bridge Way, ST IVES Cambridgeshire, PE27 5JL, United Kingdom tel: +44 1954 712757 E-mail: gewiss-uk@gewiss.com

+39 035 946 111
8:30 - 12:30 / 14:00 - 18:00
lunedì - venerdì / monday - friday

www.gewiss.com

ULTIMA REVISIONE 07/2024