DOMO CENTER

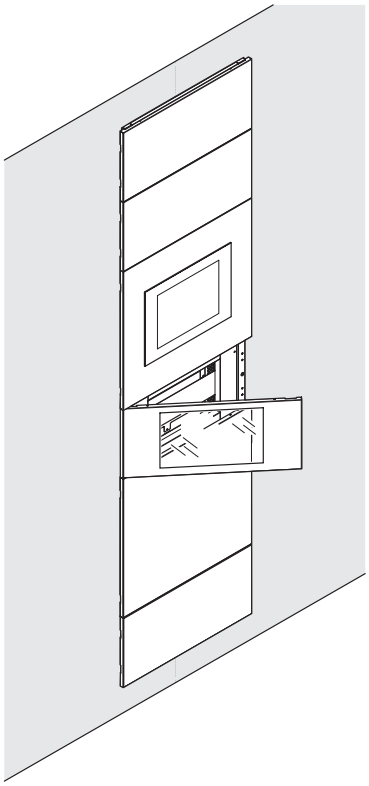

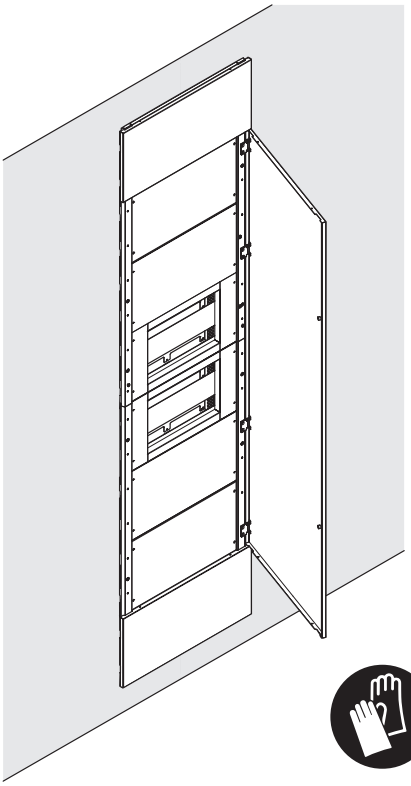

	GW N1 012	GW N1 022
	2 DIN	
H 300	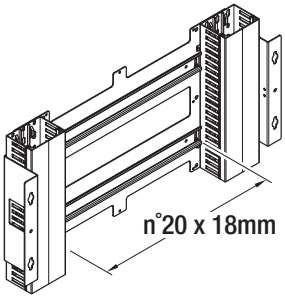	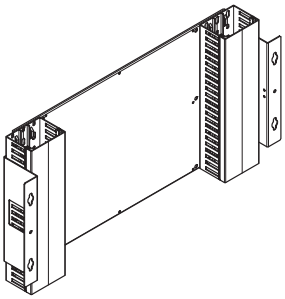

	GW N1 014	GW N1 024	GW N1 031F
	4 DIN		
H 600	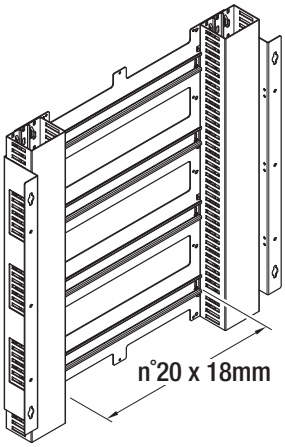	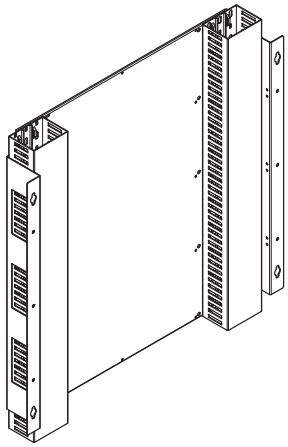	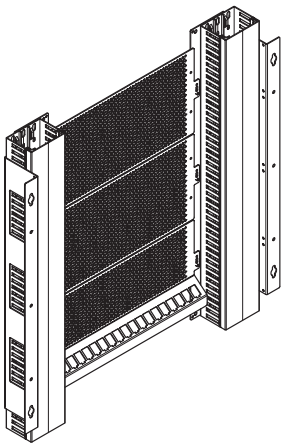

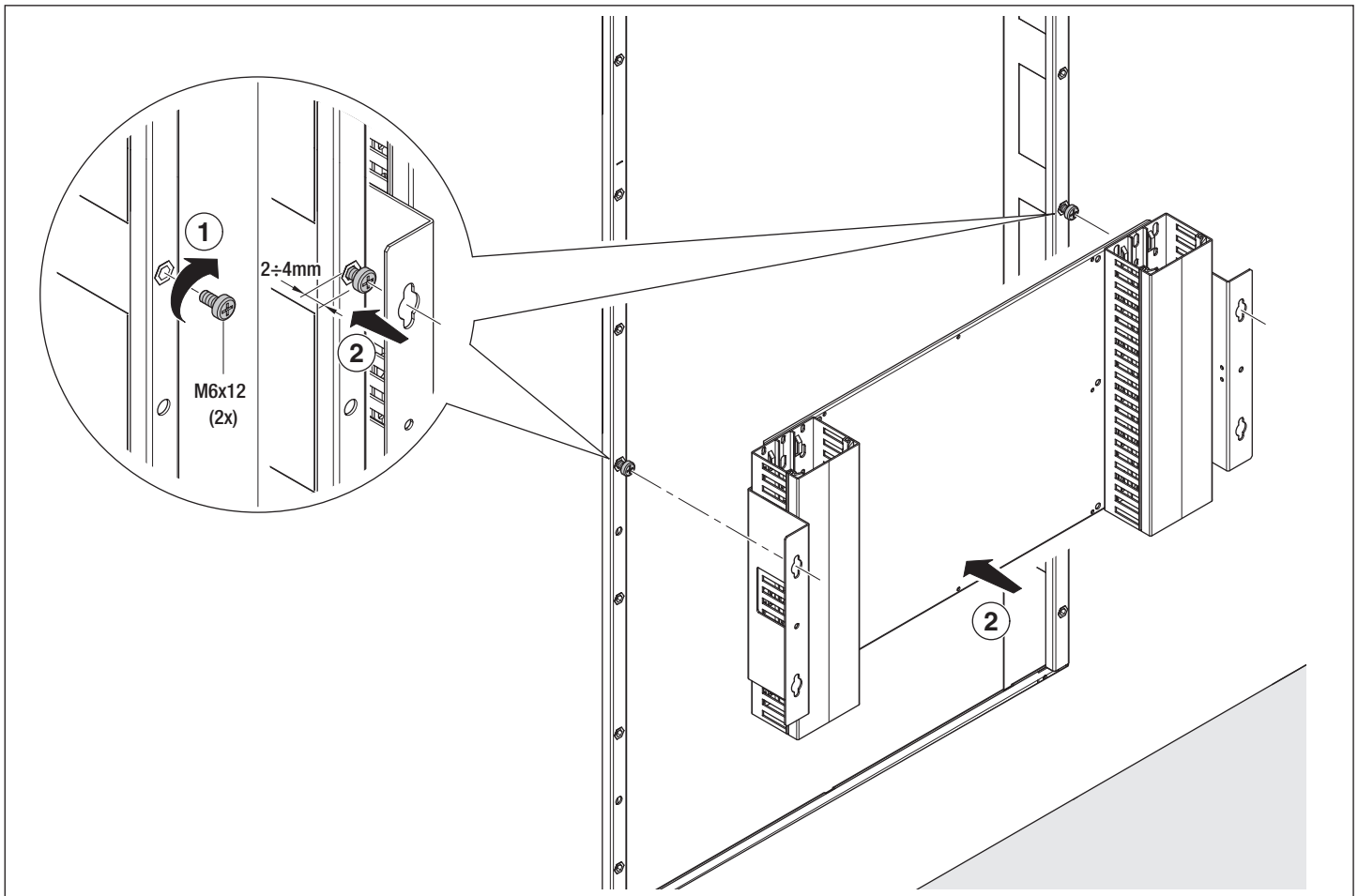
1
2÷4mm
2
M6x12
(2x)
2

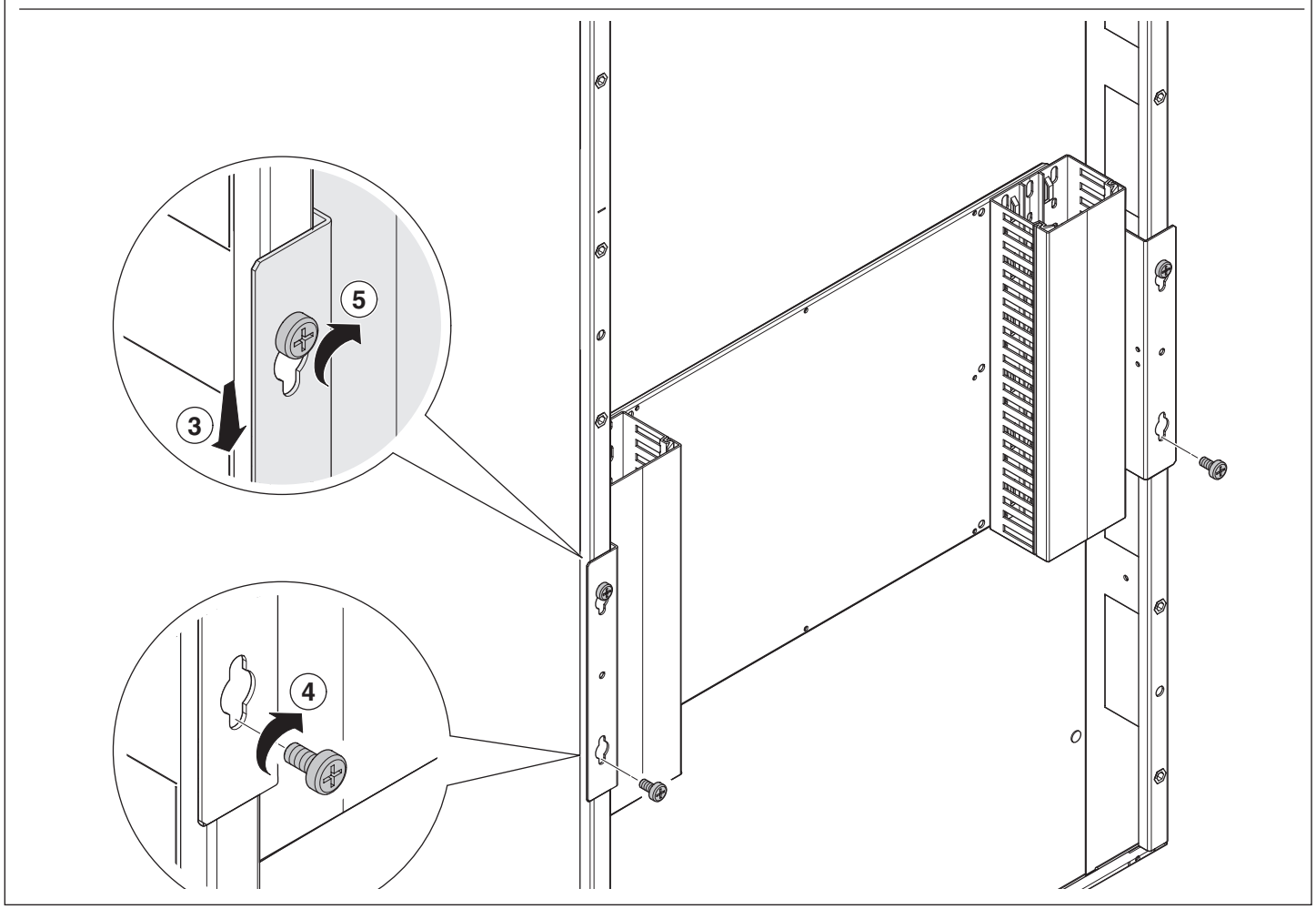
5
3
4

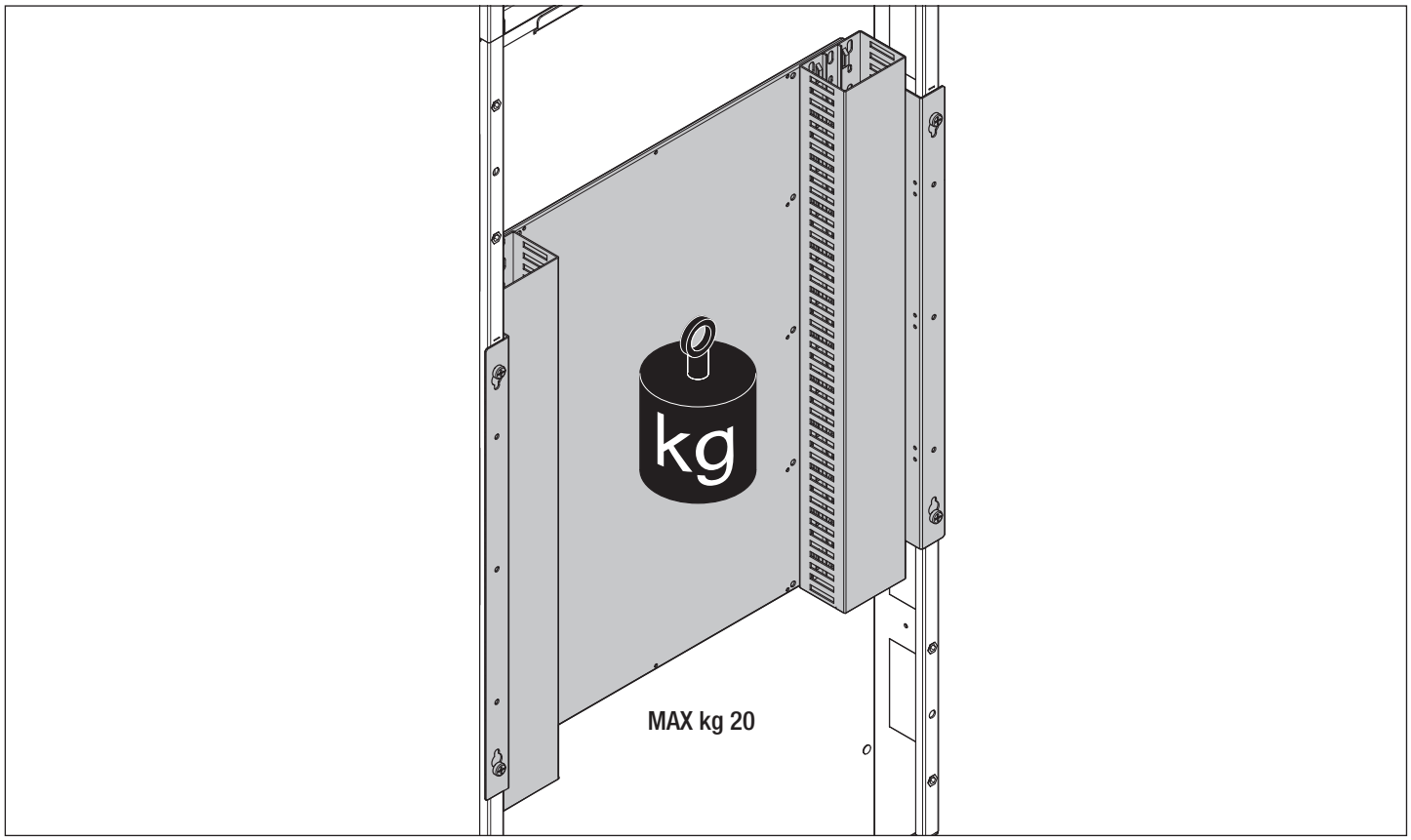
kg
MAX kg 20

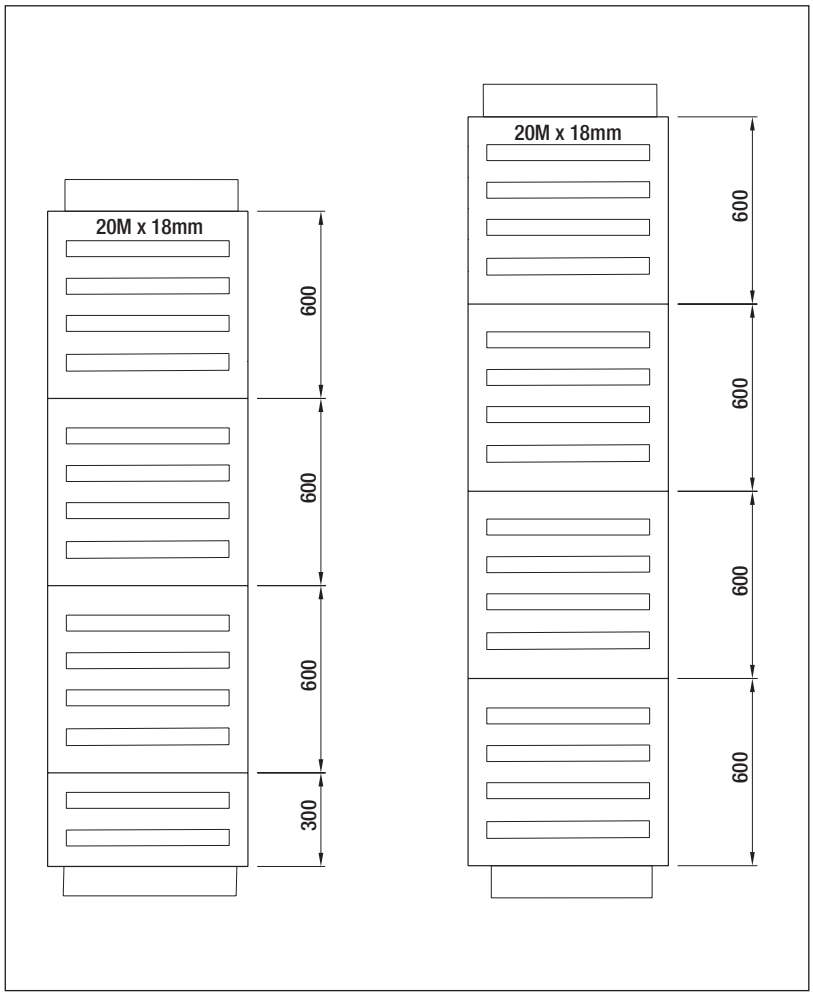
20M x 18mm
600
600
600
300
20M x 18mm
600
600
600
600

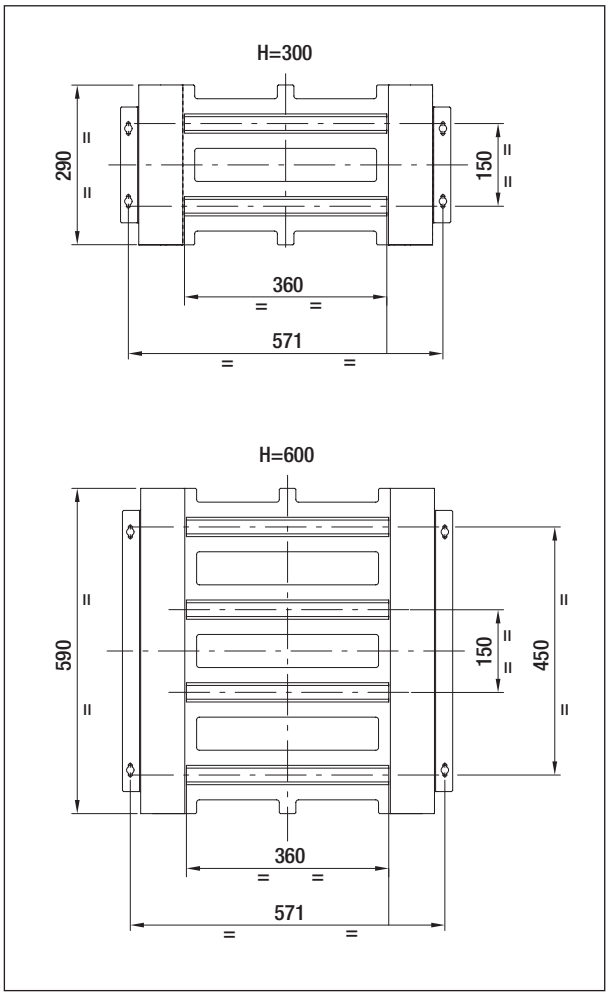
H=300
290
150
360
571
H=600
590
150
450
360
571

CEI 306-2
CEI 23-48
CEI 23-49
EN 60670-1
EN 60670-24
CEI 23-50
IEC 60884-1

Pde	50W
Un	250V
Ui	750V

4x10				
	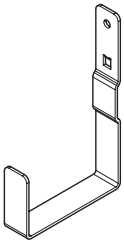	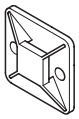	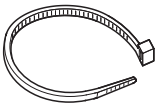	
A	B	C	D	E
24	6	6	6	3

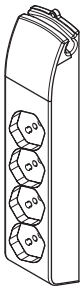				
F	G	H	I	L
1	6	1	1	6

GW 38 311	**GW 38 338** **GW 38 341** - 15m **GW 38 342** - 30m **GW 38 343** - 50m **GW 38 344** - 65m	**GW 38 098**

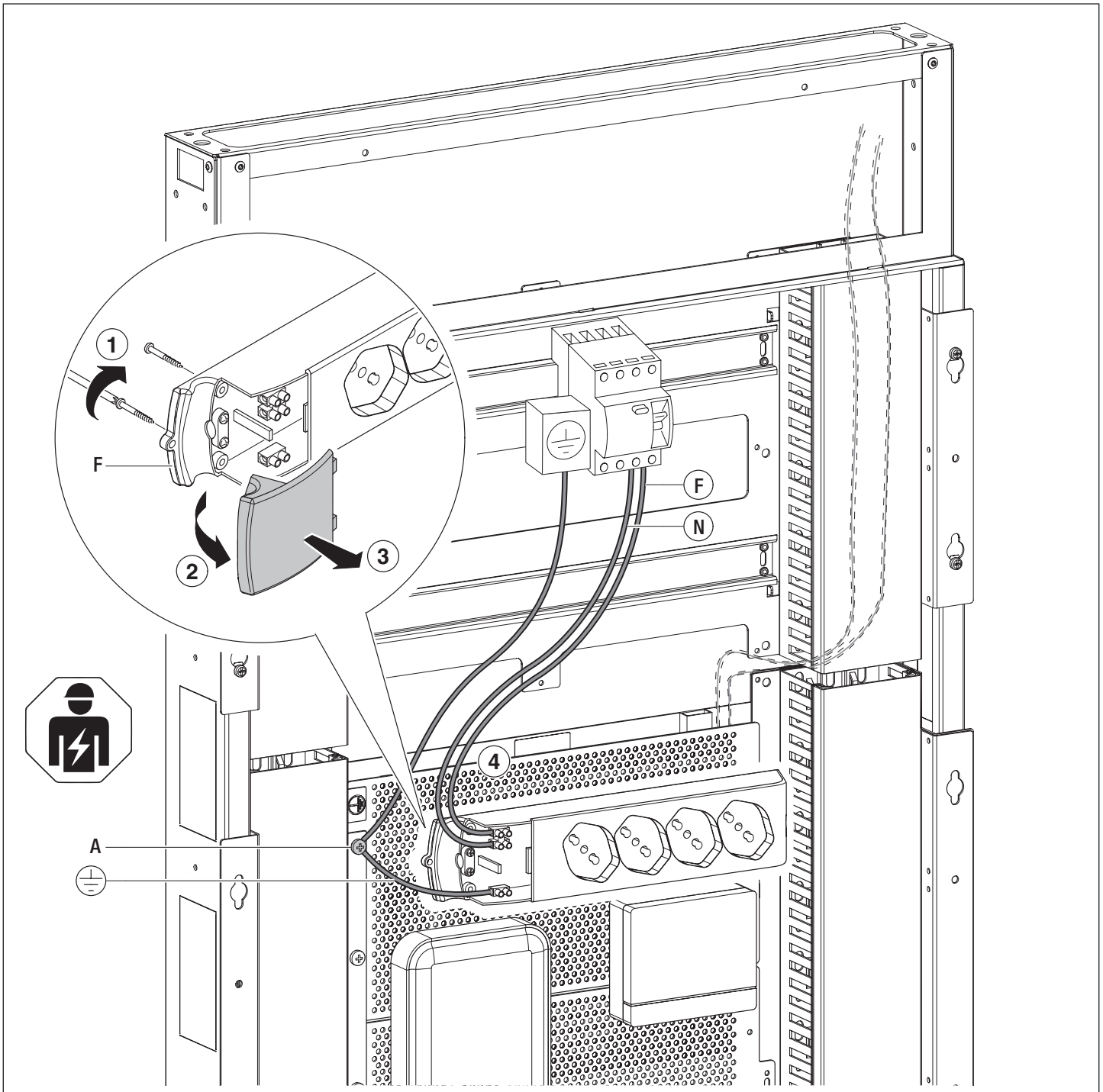
1
F
2
3
F
N
4
A

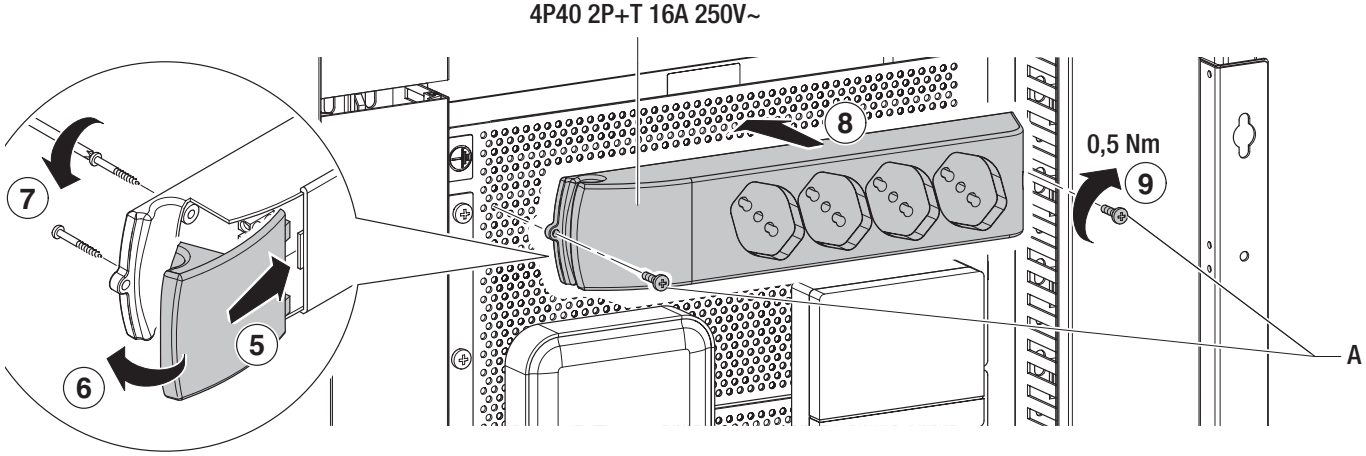
4P40 2P+T 16A 250V~
8
0,5 Nm
9
7
5
6
A

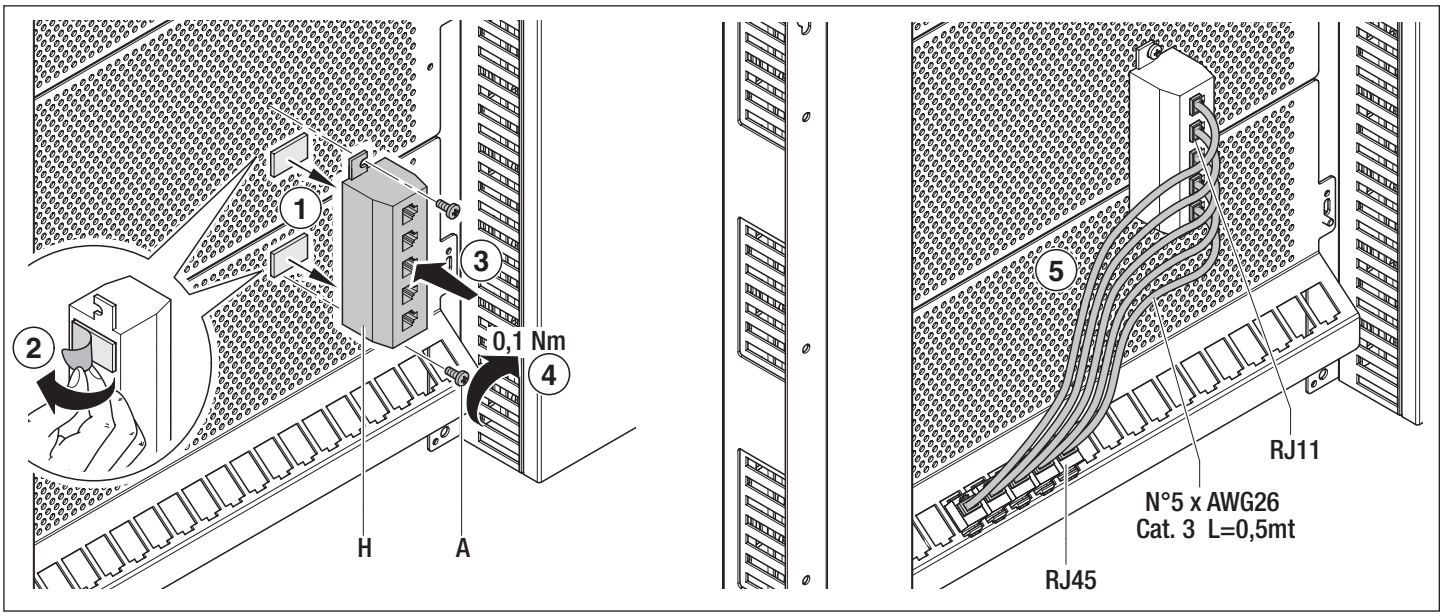
1
2
3
0,1 Nm
4
H
A
5
RJ11
N°5 x AWG26
Cat. 3 L=0,5mt
RJ45

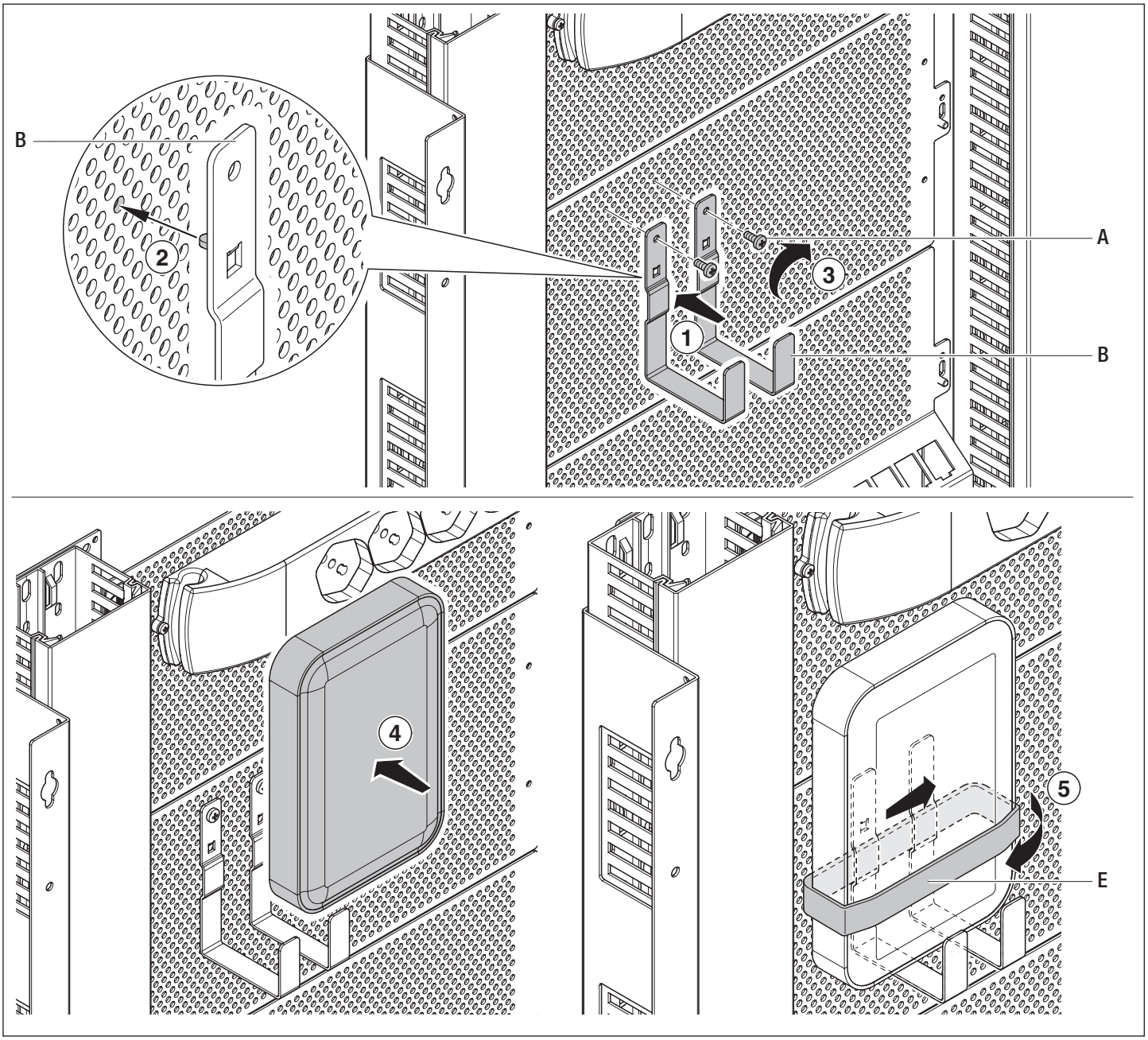
B
2
A
3
1
B
4
5
E

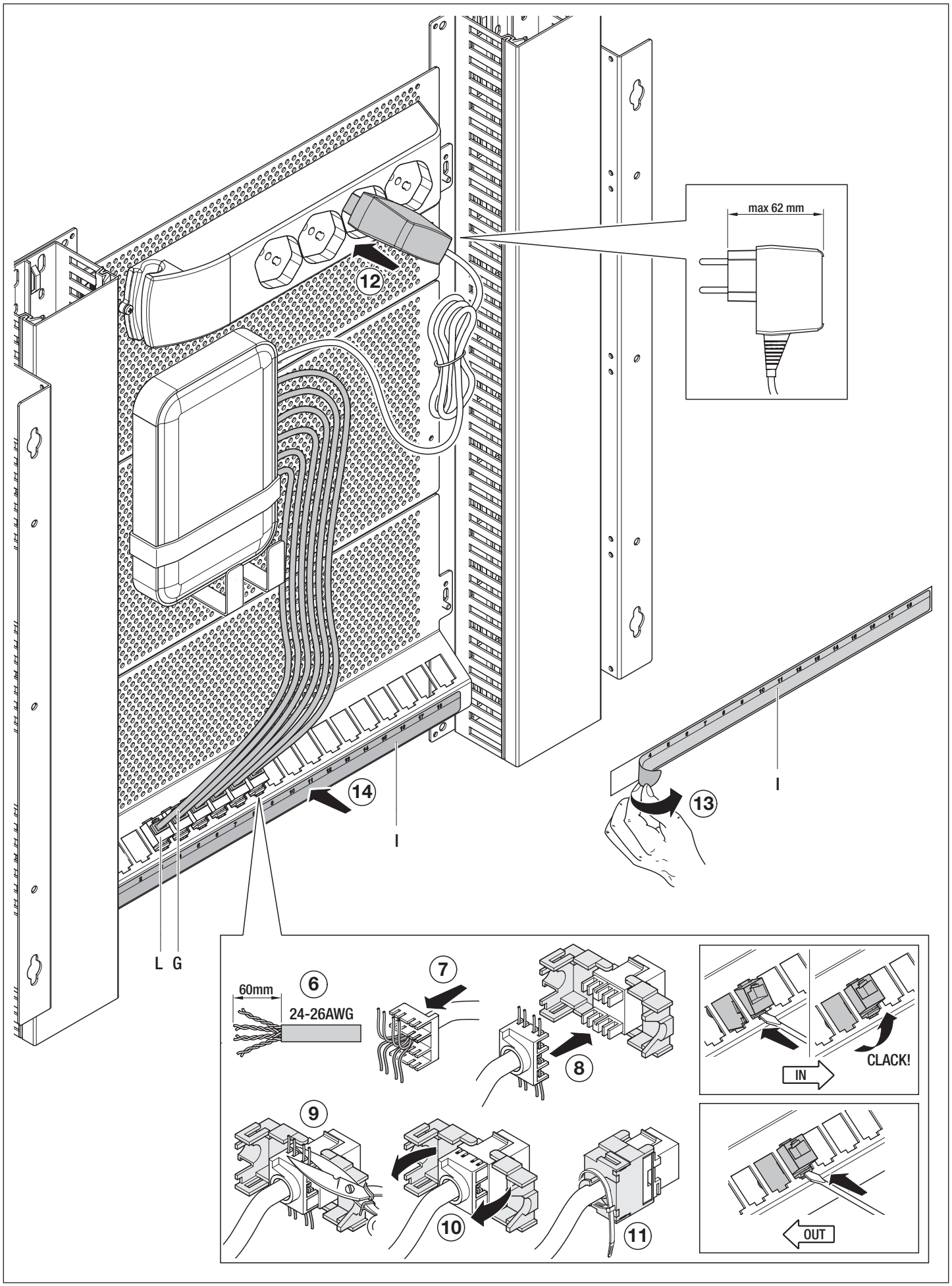
max 62 mm
12
13
14
I
I
L G
60mm
6
24-26AWG
7
8
9
10
11
CLACK!
IN
OUT

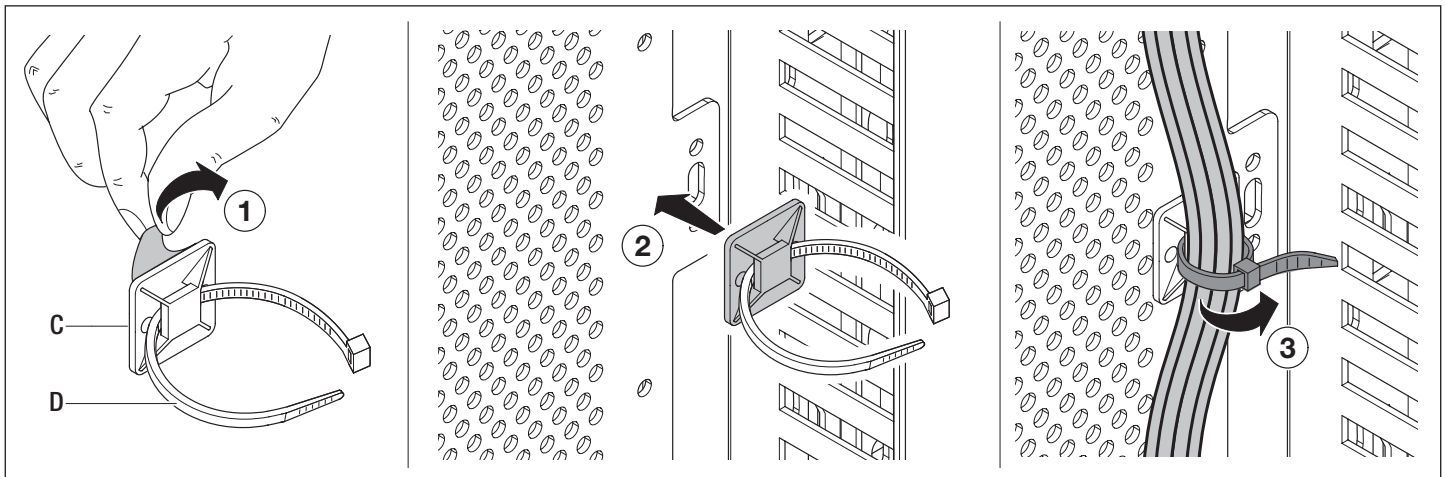
1
2
3
C
D

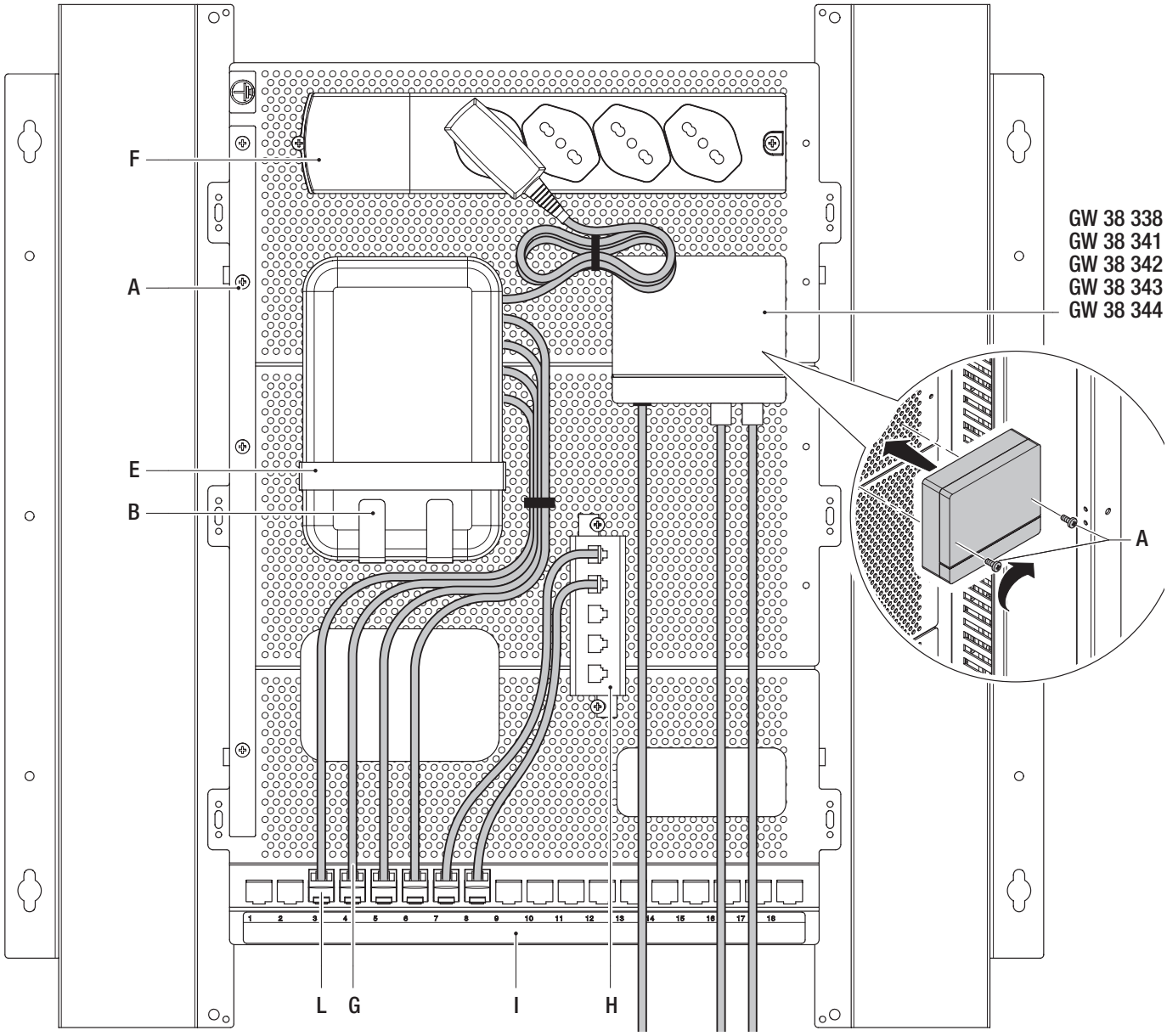
F
A
E
B
GW 38 338
GW 38 341
GW 38 342
GW 38 343
GW 38 344
A
L
G
I
H
1 2 3 4 5 6 7 8 9 10 11 12 13 14 15 16 17 18

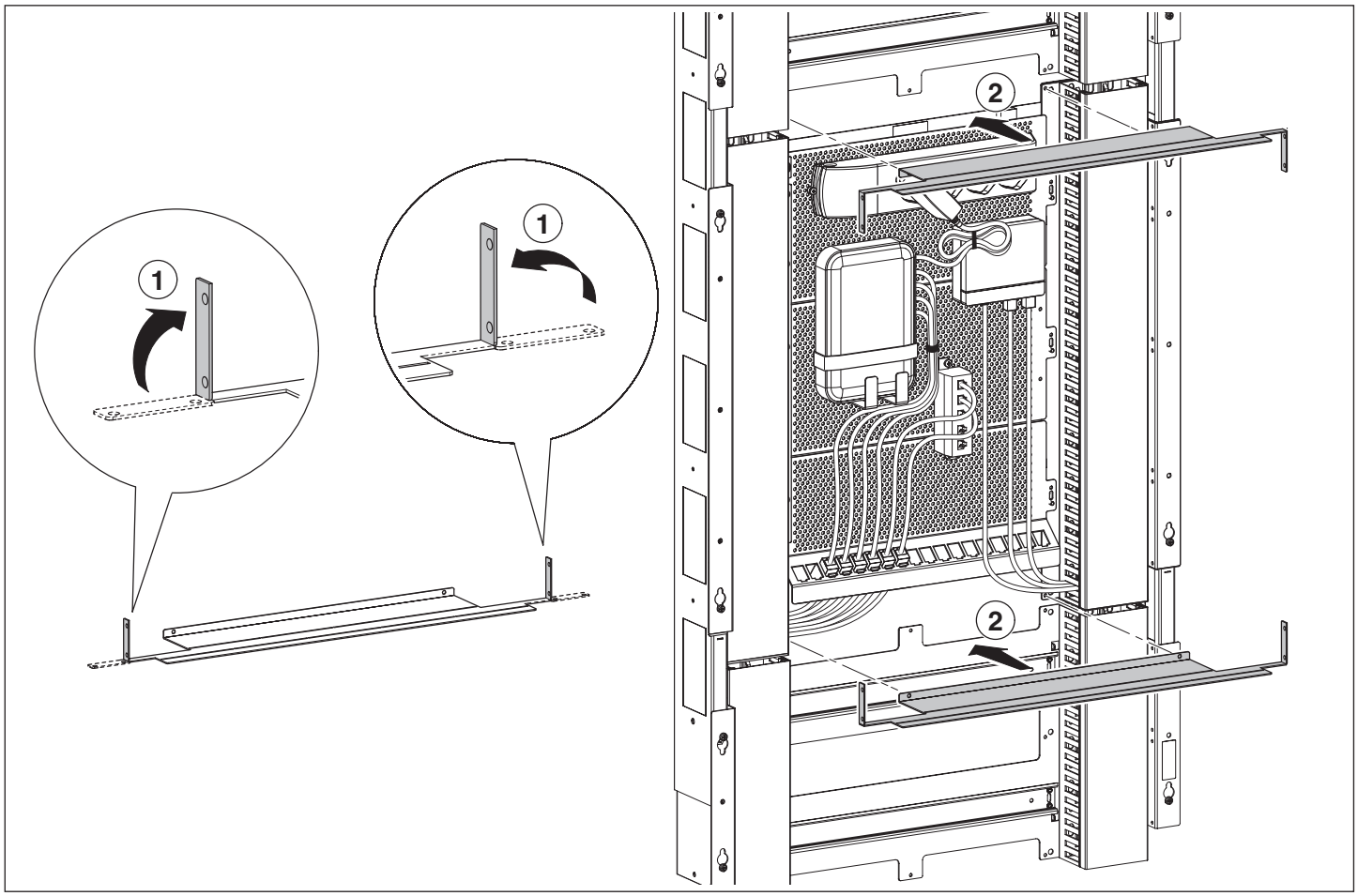
1
1
2
2

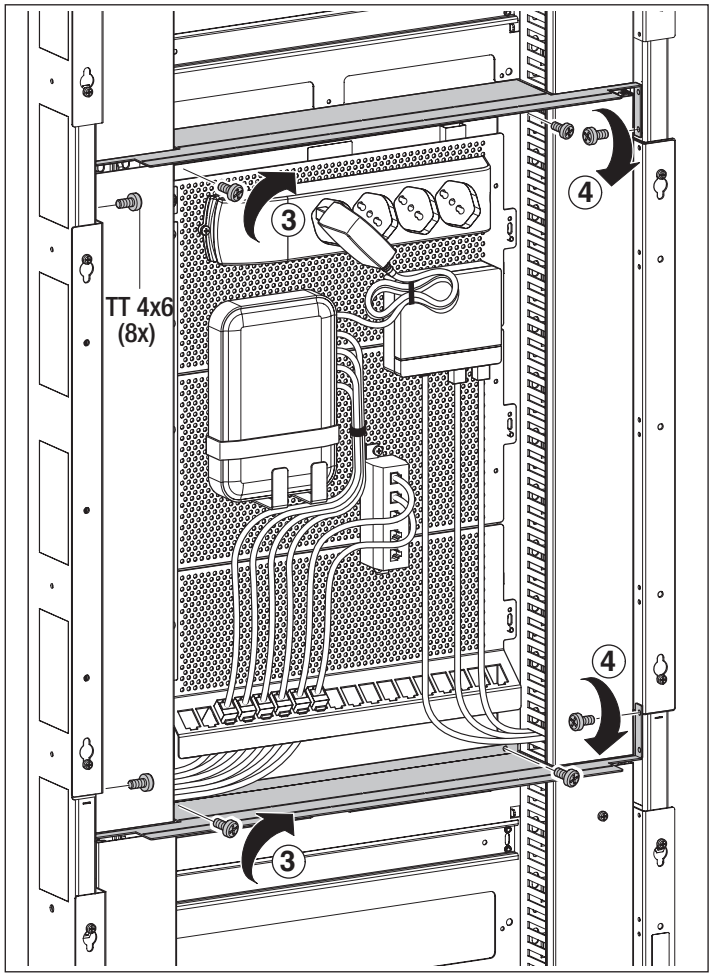
TT 4x6
(8x)
3
4
4
3

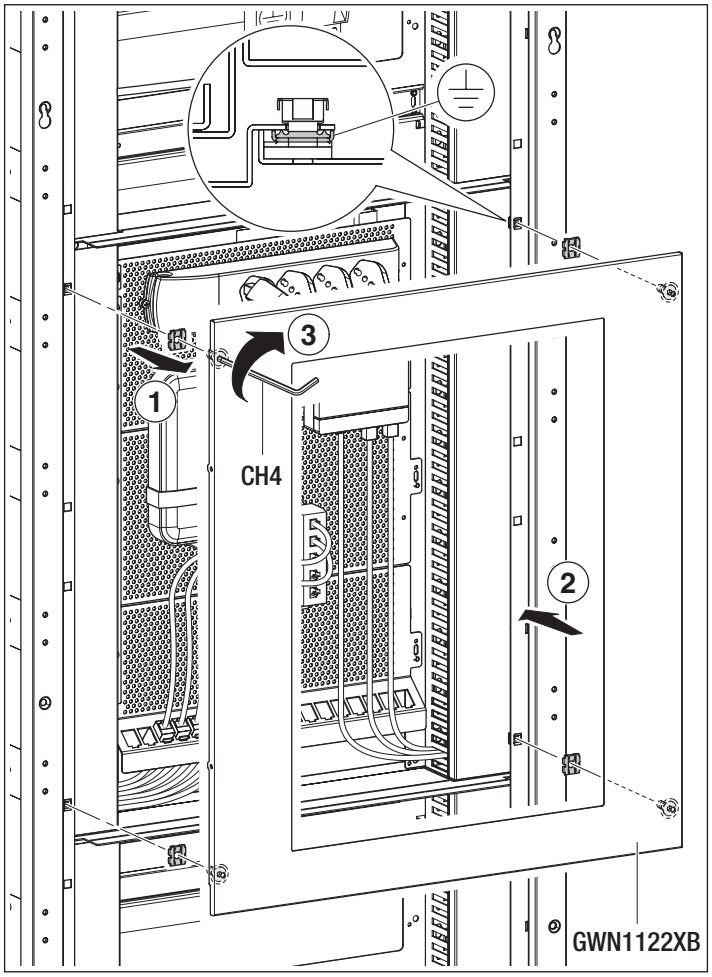
3
1
CH4
2
GWN1122XB

75744433

Punto di contatto indicato in adempimento ai fini delle direttive e regolamenti UE applicabili:
Contact details according to the relevant European Directives and Regulations:
GEWISS S.p.A. Via D.Bosatelli, 1 IT-24069 Cenate Sotto (BG) Italy tel: +39 035 946 111 E-mail: qualitymarks@gewiss.com

According to applicable UK regulations, the company responsible for placing the goods in UK market is:
GEWISS UK LTD - Unity House, Compass Point Business Park, 9 Stocks Bridge Way, ST IVES Cambridgeshire, PE27 5JL, United Kingdom tel: +44 1954 712757 E-mail: gewiss-uk@gewiss.com

+39 035 946 111
8:30 - 12:30 / 14:00 - 18:00
lunedì - venerdì / monday - friday

www.gewiss.com

ULTIMA REVISIONE 03/2024