Product Data Sheet
GW70394M
70 RT HP Range



70 RT HP is a complete offer of rotary isolator switches from 16 A to 160 A, available in boxes both in insulating material and aluminium, in control or emergency versions, compatible with the main applications for residential, tertiary and industrial contexts.
DC versions for photovoltaic applications are also available from 16 A to 40 A in insulating box.
The series is completed with versions for board from 16 A to 1000 A and for DIN rail fixing from 16 A to 63 A, which can be equipped with auxiliary contacts.
The devices have been designed to reduce wiring time, facilitate installation and guarantee the maximum safety and robustness even in the most demanding conditions.

ELECTRICAL CHARACTERISTICS	-
Circuit breaker	Rotary isolator
Rated current (A)	125
No. of poles	4P
Rated insulation voltage Ui (Vac)	1000
Rated operational current AC-21A (415 V) (A)	125
Rated operational current AC-22A (415 V) (A)	125
Rated operational current AC-23A (415 V) (A)	125
Conditional short circuit current Icc (415 V) (kA)	10
Cable section	4-70 mm²
ACCESSORIES	-
Type of accessory	Max. 3 auxiliary contacts (1 on 4th pole side, 2 on opposite side)

FUNCTIONAL CHARACTERISTICS	-
Version	Enclosed
Material	Aluminium
Type	For emergency
Knob colour	Red
Lockable	YES (max. 3 locks in OFF)
IP degree	IP66/IP69
Mechanical resistance	IK10 (enclosure); IK08 (knob)
Operating temperature	-25 +60 °C
Cable entries on top	-
Cable entries on bottom	-
Cable entries on back	-

BEHAVIOUR WITH CHEMICAL AND ATMOSPHERIC AGENTS

Saline solution	Acids		Bases		Solvents				Mineral oil	UV rays
	Concentrated	Diluited	Concentrated	Diluited	Hexane	Benzol	Acetone	Ethyl alcohol		
Resistant	Limited resistance	Limited resistance	Limited resistance	Limited resistance	Resistant	Resistant	Resistant	Resistant	Resistant	Resistant

DIMENSIONAL

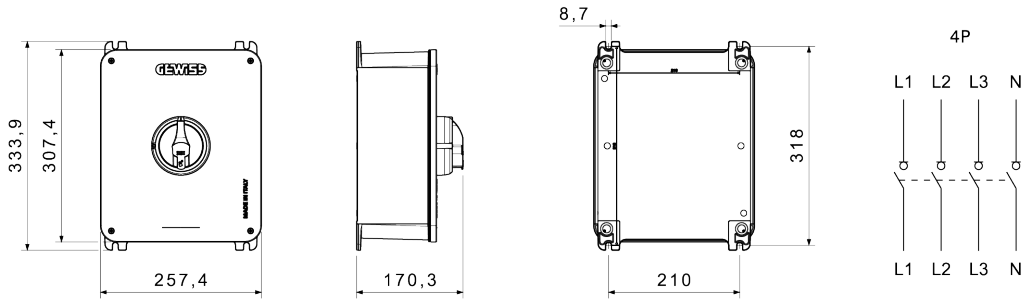

TECHNICAL SYMBOLOGY

IP
IP66/IP69

IK
IK10 (enclosure); IK08 (knob)

STANDARDS/APPROVALS

CE UKCA Reach Declaration

GEWISS S.p.A. Via A. Volta, 1
24069 Cenate Sotto - Bergamo - Italy
tel. +39 035 94 61 11 fax +39 035 94 69 09
Company subject to the management and coordination of Polifin S.p.A.

www.gewiss.com
sat@gewiss.com
Last update 24/09/2026

Data, measures, designs and pictures are shown only as informative purposes, and could be changed without previous notice