COMBI Xi



www.spitpaslode.com

NEVER STOP BUILDING

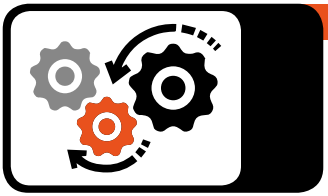







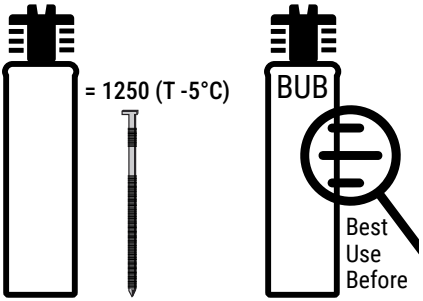

MAG1 +





Ø = 2.8 - 3.1 mm
L = 51 -> 90 mm (Smooth & Ring)
RounDrive® 34°

MAG2 +





Ø = 4 mm
L = 35 / 40 / 50 mm (Hardened Ring Nails)
34°

















= 13 000 max







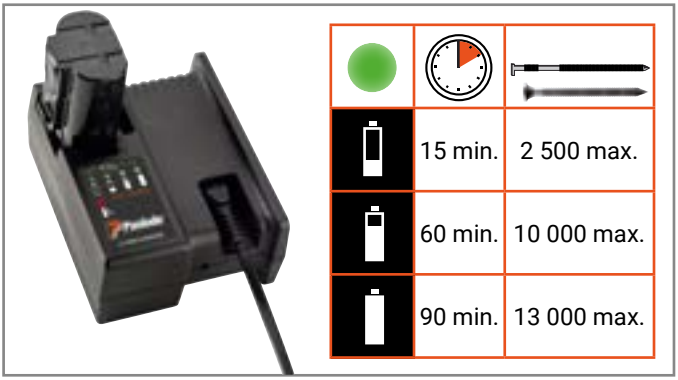

	15 min.	2 500 max.
	60 min.	10 000 max.
	90 min.	13 000 max.





25%	50%	75%	100%
○	○	○	●
○	○	●	●
○	●	●	●
●	●	●	●



0 -> 300
○
○
○
●





014749

-15°C ≤ T ≤ +49°C - 1000/hour - 2 nails/second

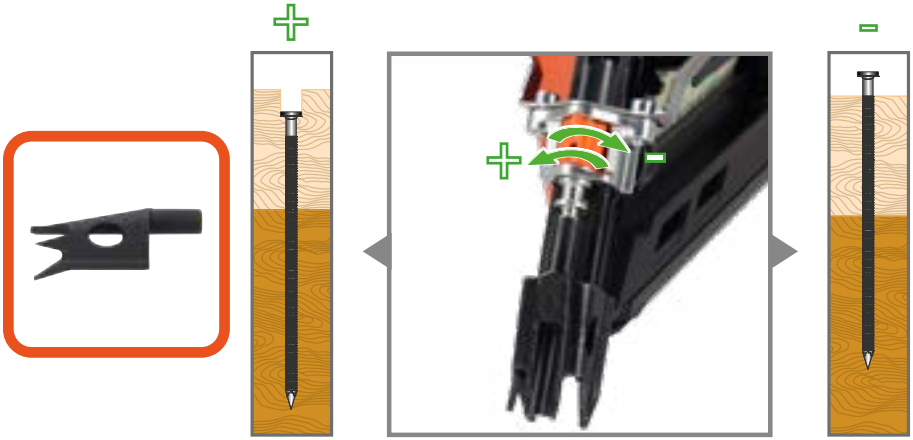






1


2
BANG!


3


4





014749

-15°C ≤ T ≤ +49°C - 1000/hour - 2 nails/second

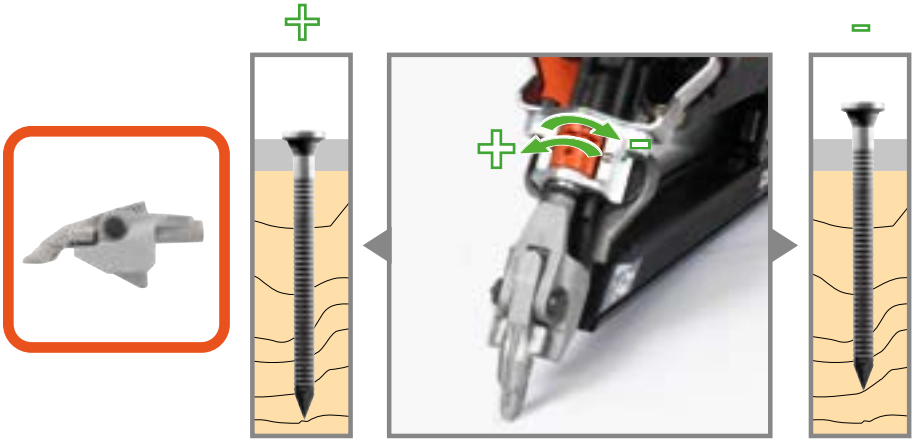






OK


NOK

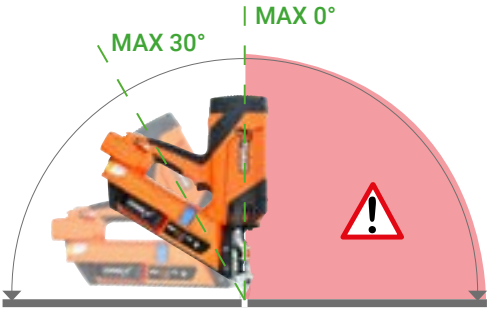
MAX 30°
MAX 0°

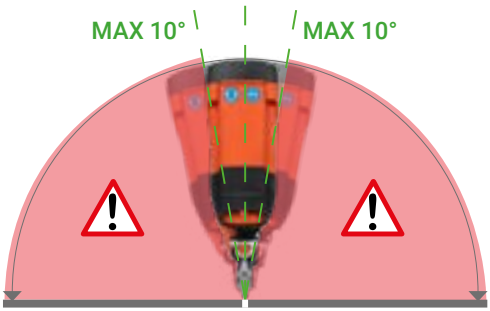
MAX 10°
MAX 10°


1


2
BANG!


3

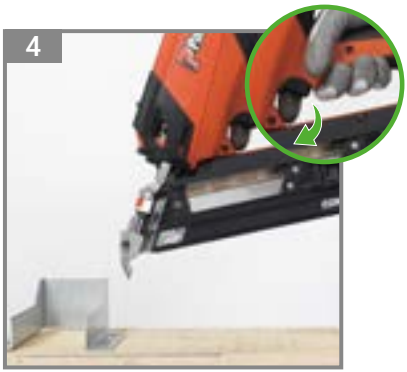
4





014749





MAG1 +





Ø = 2.8 - 3.1 mm
L = 51 -> 90 mm (Smooth & Ring)
RounDrive® 34°



MAG2 +





Ø = 4 mm
L = 35 / 40 / 50 mm (Hardened Ring Nails)
34°


1


2


3


4


5


6


7


8


9




>50°
014749




BANG!



OK

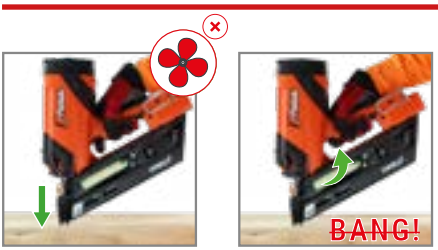
BANG!

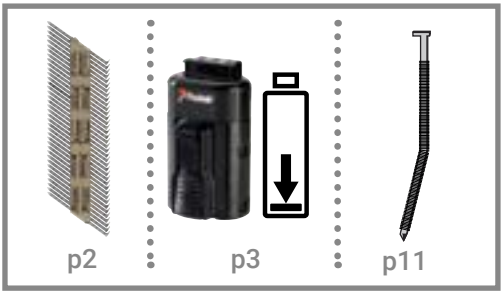
p2
p3
p11

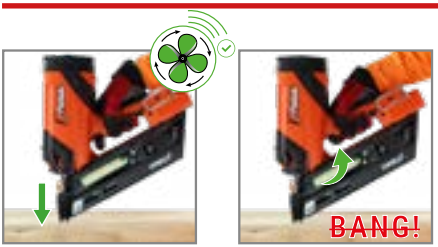
BANG!

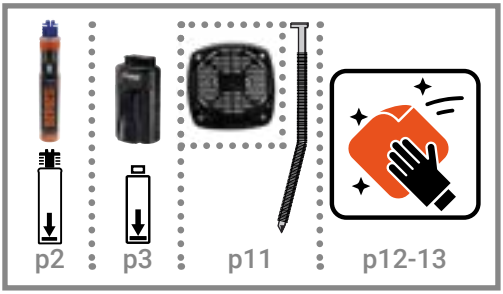
p2
p3
p11
p12-13

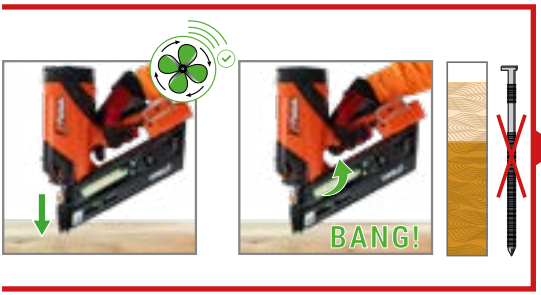
BANG!

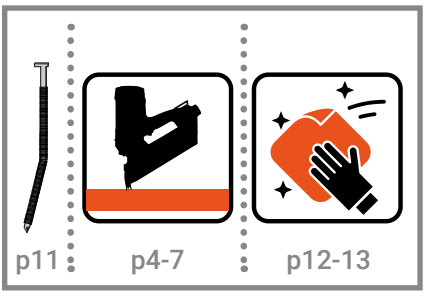
p11
p4-7
p12-13

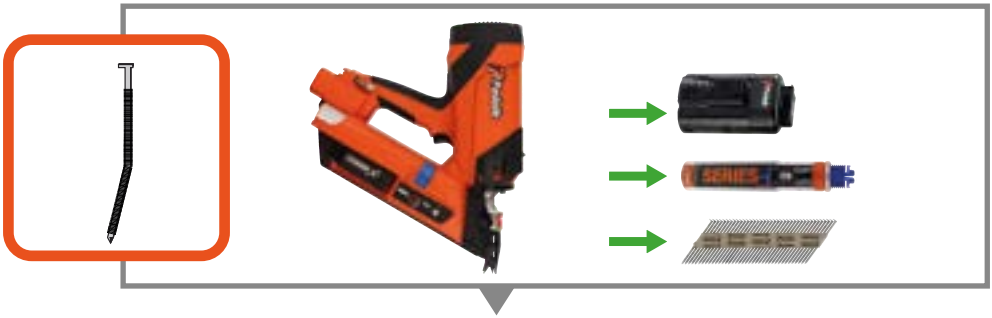

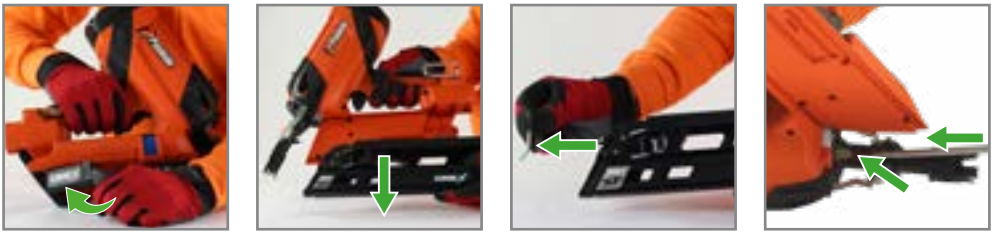

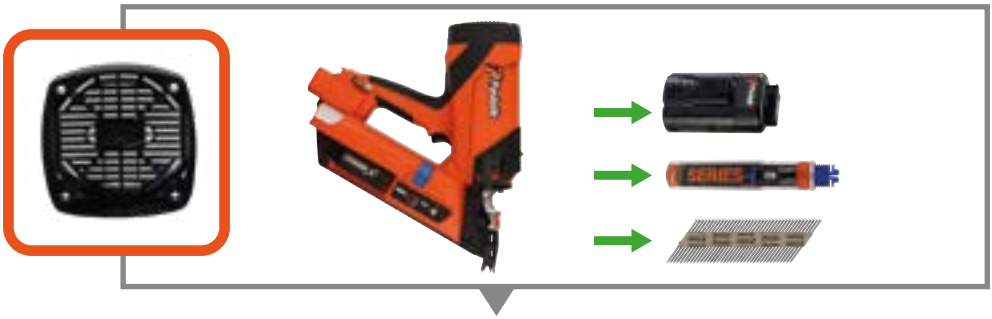


X4
115521





014749



CLEANING KIT 013314

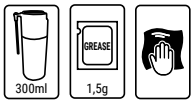

x1 x2 x1

SCAN ME













































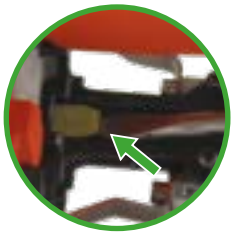













RESET







>10s

Resting position / Ruheposition / Position de repos / Ruststand / Posición de descanso / Posizione di riposo / Posição de descanso / Pozycja spoczynku / Klidová poloha / Nyugalmi állapot / Положение в нерабочем состоянии / Θέση αδράνεια / Hvilestilling / Viloläge / Hvileposisjon / Lepoasento / Položaj mirovanja / Pokojová poloha / Položaj mirovanja/ وضع السكون / Ramybės padėtis / Ooteasend / Miera stāvoklis / Hvíldarstaða



Notes



Route de Lyon F-26500
Bourg-lès-Valence
France

014009-3
03/26