⚠ Warnung

Lebensgefahr durch Berührung unter Spannung stehender Teile

Das vorliegende Gerät führt gefährliche Spannungen.
Beim Berühren unter Spannung stehender Teile erleiden Sie Tod oder schwere Körperverletzungen.
Der Betrieb dieses Gerätes erfordert detaillierte Installations- und Betriebsanweisungen, wie sie im Montagehandbuch / der Betriebsanleitung für dieses Gerät enthalten sind.

⚠ Warning

Danger to life when live parts are touched

The present device conducts hazardous voltages.
Touching live components can result in death or severe injury.
Operation of this equipment requires detailed installation and operation instructions provided in the installation/operation manual intended for use with this product.

⚠ 警告

接触带电部件会引发生命危险

本设备会传导危险电压。
接触带电部件可能会造成人员重伤，甚至是死亡。
本设备的运行应根据所配备的安装/操作手册中的详细安装和操作说明进行。

⚠ Attention

Danger de mort en cas de contact avec des pièces sous tension

L'appareil présente des tensions électriques dangereuses.
Tout contact avec des parties sous tension peut entraîner la mort ou des blessures graves.
La mise en œuvre de cet appareil nécessite les instructions détaillées d'installation et de service fournies dans le manuel d'installation/de service correspondant au produit.

⚠ Advertencia

Peligro de muerte al tocar piezas bajo tensión

En el presente equipo hay aplicadas tensiones peligrosas.
Tocar piezas que están bajo tensión puede provocar lesiones corporales graves o incluso la muerte.
El funcionamiento de este equipo requiere unas instrucciones de instalación y servicio detalladas como las que figuran en el manual de montaje o las instrucciones de servicio del mismo.

⚠ Avvertenza

Pericolo di morte per contatto con parti sotto tensione

In questo apparecchio sono presenti tensioni pericolose.
Il contatto con parti sotto tensione può provocare la morte o gravi lesioni.
L'utilizzo di questo apparecchio richiede istruzioni dettagliate per l'installazione e l'esercizio, che sono riportate nel manuale di installazione e d'uso di questo prodotto.

Push Through Units

Drill patterns and dimensions

Cutouts and drill patterns in the cabinet wall for the mounting frame

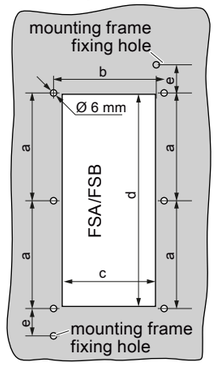

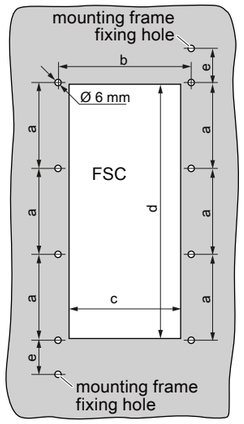

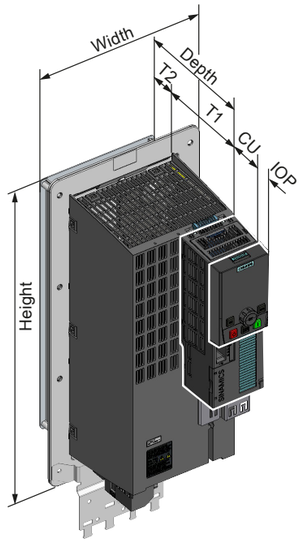

Frame size	Dimensions (mm)							Distances (mm)[1]		Fixings		Drill pattern and cutouts (mm)				
	Height		Width	Depth			Max. depth with CU and OP	Air flow								
		With Shielding Plate			T1	T2		Above	Below	Screw	Tightening Torque (Nm)	a	b	c	d	e
FSA	238	322	126	171	117.7	53.1	256	80	100	M5	3.5	103	106	88	198	27
FSB	345	430	154	171	117.7	53.1	256	80	100	M5	3.5	147.5	134	116	304	34.5
FSC	411	500	200	171	117.7	53.1	256	80	100	M5	3.5	123	174	156	365	30.5

[1] The Power Modules can be mounted side-by-side. Due to tolerance reasons, we recommend a lateral distance of about 1 mm

FSA: 6SL3260-6AA00-0DA0
FSB: 6SL3260-6AB00-0DA0
FSC: 6SL3260-6AC00-0DA0

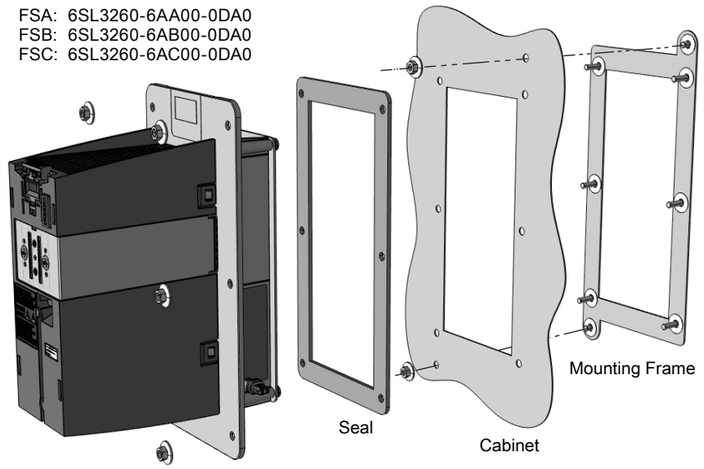

It is recommended that the optional mounting frame is used to install the Push-through Power Module in a cabinet. This optional mounting frame is designed in conjunction with the supplied seal to easily maintain an IP55 rating of the enclosure (the seal is delivered with the Power Module). If the Power Module is mounted without using the optional Mounting frame, it is the user's responsibility to ensure the correct IP protection rating is reached.

Screening plate fitting

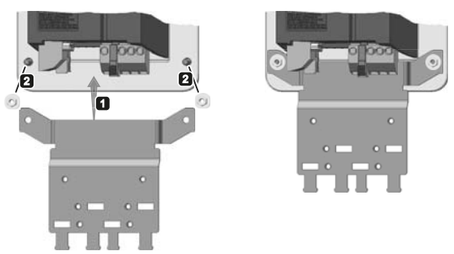

Scan the QR code to obtain further information on SINAMICS G120.

Declaration of Conformity
The Declaration of Conformity can be found at the following link:
http://support.automation.siemens.com/WW/view/en/30563514/134200

Air flow distances

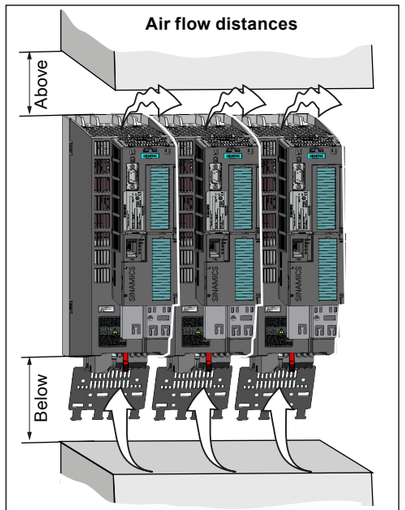

IP20 Units

Drill patterns and dimensions

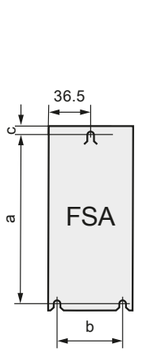

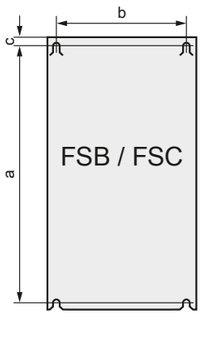

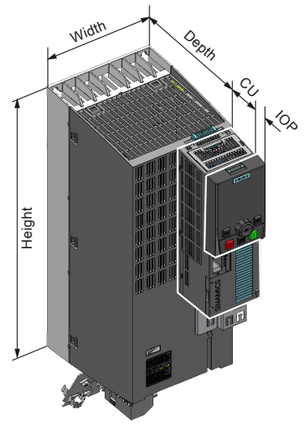

Frame size	Dimensions (mm)					Distances (mm)[1]		Fixings		Drill pattern (mm)		
	Height		Width	Depth		Air flow						
		With Shielding Plate			Max. depth with CU and OP	Above	Below	Screw	Tightening Torque (Nm)	a	b	c
FSA	196	276	73	165	250	80	100	M4	2.5	186	62.3	6
FSB	292	370	100	165	250	80	100	M4	2.5	281	80	6
FSC	355	432	140	165	250	80	100	M5	3.5	343	120	6

[1] The Power Modules can be mounted side-by-side. Due to tolerance reasons, we recommend a lateral distance of about 1 mm.

Screening plate fitting

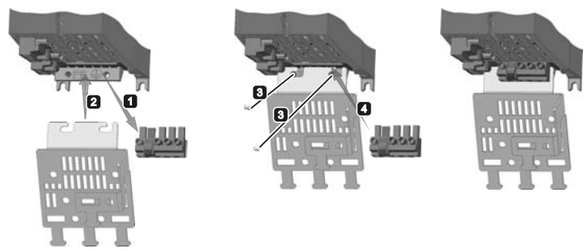

A5E33582380A-AA

Siemens AG,
Frauenauracher Str. 80,
DE-91056 Erlangen

Issue 04/2014

Feature	Specification
Line voltage	3 AC 380 V … 480 V ± 10 % up to 2000 m (6600 ft) installation altitude.
Output voltage	3 AC 0 V … input voltage * 0.95
Input frequency	50 Hz … 60 Hz, ± 3 Hz
Output frequency	0 Hz … 550 Hz, depending on the control mode
Power factor λ	0.9 without line reactor
Inrush current	Less than rated input current
Pulse frequency (factory setting)	4 kHz. Can be increased in 2 kHz steps up to 16 kHz. Increasing the pulse frequencies leads to an output current reduction.
Electromagnetic compatibility	**Interference emission**: The devices are suitable for second environment category C2 in accordance with IEC61800-3 if the following conditions are fulfilled: The motor cable is a shielded cable with low capacitance and is not longer than 50 m. The pulse frequency does not exceed 4 kHz, the current does not exceed the LO input value. For details, refer to the Hardware Installation Manual. **Interference immunity**: The devices are suitable for second environment category C3
Braking methods	DC braking
Environmental rating	Built in units (open type equipment): IP20, Push through units: IP54 / UL type 12 when mounted on a flat surface of an enclosure
Motor overload protection	This equipment is capable of providing internal motor overload protection according to UL508C. The protection level is 115 %, 230 % and 400 % full load current of the equipment. This is adjusted via parameter p0640 and assumes the equipment has had basic motor commissioning for the motor used as described in the documentation.
LO Operation temperature 1)	-10 °C … 40 °C (32 °F … 104 °F) without current derating / up to 60 °C (140 °F) with current derating
HO Operating temperature 1)	-10 °C … 50 °C (32 °F … 122 °F) without current derating / up to 60 °C (140 °F) with current derating
Storage temperature	- 40 °C … +70 °C (- 40 °F … 158 °F)
Installation altitude above sea level	Up to 1000 m (3300 ft) without derating / Up to 4000 m (13000 ft) with derating
Humidity	< 95% RH - non-condensing
Environmental conditions	Suitable for environmental class 3C2 according to IEC 60721-3-3 against damaging chemical substances
Pollution	For open type equipment according to pollution degree level 2. Protection against conductive pollution is required e.g. using an IP54 cabinet. For enclosed type/Push Through equipment according pollution degree level 3.
Shock	Long-term storage in the transport packaging according to Class 1M2 of IEC 60721-3-1 : Transport in the transport packaging according to Class 2M3 of IEC 60721-3-2. Operation according to Class 3M2. See Hardware Installation Manual for detailed specifications.
Vibration	Long-term storage in the transport packaging according to Class 1M2 to IEC 60721-3-1 : Transport in the transport packaging according to Class 2M3 to IEC 60721-3-2. Operation according to Class 3M2. See Hardware Installation Manual for detailed specifications.
Line impedance	With Uk ≤ 1 %, a line reactor must not be used
Short Circuit Current Rating (SCCR)	Suitable for use on a circuit capable of delivering not more than 65 kA rms symetrical amperes; 480 Vac maximum when protected by Class J or R/C (JFHR2) semiconductor fuses only as stated

1) according to UL, operation with temperatures > 50 °C (122 °F) is not permitted at all.
The maximum temperature is determined by the component (Power Module, Control Unit or Operator panel) with the lowest maximum temperature

⚠ **CAUTION - Cable cross-section for grounding:** The earth cable must be at least as big as the power cables.

For United States / Canadian installations (UL/cUL): In order that the system is UL/cUL-compliant, use UL/cUL-certified J-type fuses. Use 75° C copper wire only.

Additional requirements for Canadian compliance:
Transient surge suppression must be installed on the line side of this equipment. We recommend a VZCA7 circuit breaker type rated at the following specifications:
480 V (phase to ground), 480 V (phase to phase), suitable for overvoltage category III, provides protection for a VPR maximum of 2 kV and type 1 or type 2 SPD application.

LO base load values			HO base load values			Rated	Frame	Order No. *)	Line fuses			
Power		Output current	Power		Output current	input current	Size		Semi conductor fuse, e.g. Siemens		UL, J-type	
kW	hp	A	kW	hp	A	A						
Built in units												
0.37	0.50	1.3	0.25	0,34	0.9	1.3	FSA	6SL3210-1NE11-3_L1	3NE1 813-0	(16 A)	AJT2	2 A
0.55	0.75	1.7	0.37	0.50	1.3	1.8	FSA	6SL3210-1NE11-7_L1	3NE1 813-0	(16 A)	AJT4	4 A
0.75	1.00	2.2	0.55	0.75	1.7	2.3	FSA	6SL3210-1NE12-2_L1	3NE1 813-0	(16 A)	AJT4	4 A
1.10	1.50	3.1	0.75	1.00	2.2	3.2	FSA	6SL3210-1NE13-1_L1	3NE1 813-0	(16 A)	AJT6	6 A
1.50	2.00	4.1	1.10	1.50	3.1	4.2	FSA	6SL3210-1NE14-1_L1	3NE1 813-0	(16 A)	AJT6	10 A
2.20	3.00	5.9	1.50	2.00	4.1	6.1	FSA	6SL3210-1NE15-8_L1	3NE1 813-0	(16 A)	AJT10	10 A
3.00	5.00	7.7	2.20	3.00	5.9	8.0	FSA	6SL3210-1NE17-7_L1	3NE1 813-0	(16 A)	AJT10	10 A
4.00	5.00	10.2	3.00	5.00	7.7	10.5	FSB	6SL3210-1NE21-0_L1	3NE1 813-0	(16 A)	AJT15	15 A
5.50	7.50	13.2	4.00	5.00	10.2	13.6	FSB	6SL3210-1NE21-3_L1	3NE1 814-0	(20 A)	AJT20	20 A
7.50	10.00	18.0	5.50	7.50	13.2	18.6	FSB	6SL3210-1NE21-8_L1	3NE 1815-0	(25 A)	AJT25	25 A
11.00	15,00	26.0	7.50	10.00	18.0	26.9	FSC	6SL3210-1NE22-6_L1	3NE 1803-0	(35 A)	AJT35	35 A
15.00	20.00	32.0	11.00	15.00	26.0	33.1	FSC	6SL3210-1NE23-2_L1	3NE 1817-0	(50 A)	AJT45	45 A
18.50	20.00	38.0	15.00	15.00	32.0	39.2	FSC	6SL3210-1NE23-8_L1	3NE 1817-0	(50 A)	AJT50	50 A
Push through units												
3.00	5.00	7.7	2.20	3.00	5.9	8.0	FSA	6SL3211-1NE17-7_L1	3NE1 813-0	(16 A)	AJT10	10 A
7.50	10.00	18.0	5.50	7.50	13.2	18.6	FSB	6SL3211-1NE21-8_L1	3NE 1815-0	(25 A)	AJT25	25 A
18.50	20.00	38.0	15.00	15.00	32.0	39.2	FSC	6SL3211-1NE23-8_L1	3NE 1817-0	(50 A)	AJT50	50 A

*) _: A = filtered unit, U = unfiltered unit

Screening methods

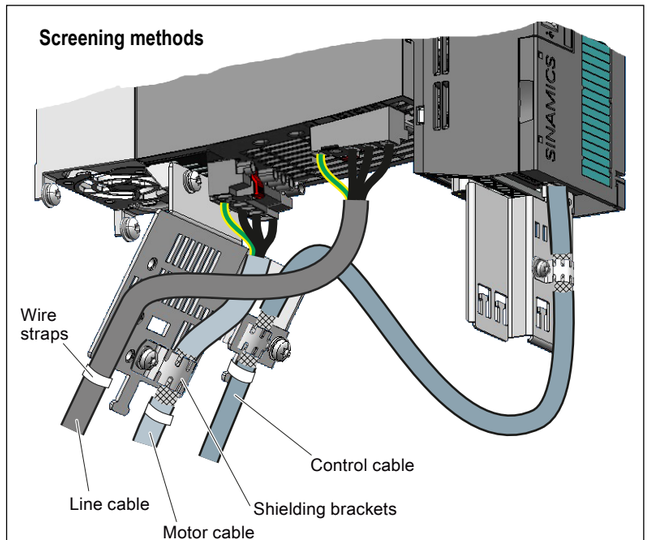

Fitting CU to PM

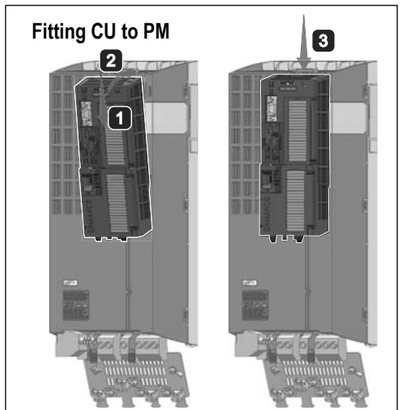

Mains and Motor terminals
The Power Modules are fitted with detachable terminals. It can be removed from the Power Module by pressing the release catch. The connectors are not interchangeable.

	Cable cross sections		Tightening torques
FSA:	1.5 … 2.5 mm²	16 … 14 AWG	0.5 Nm (4 lbf.in)
FSB:	1.5 … 6 mm²	16 … 10 AWG	0.6 Nm (5 lbf.in)
FSC:	6 … 16 mm²	10 … 6 AWG	1.5 Nm (13 lbf.in)

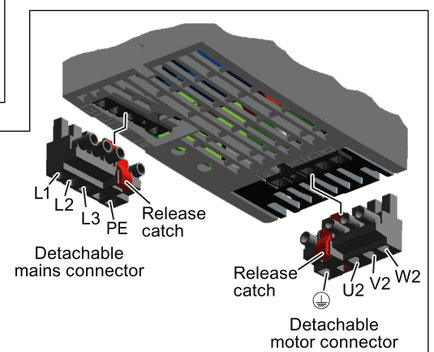

Overloads

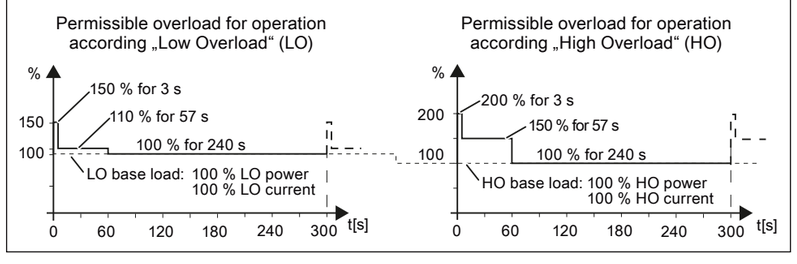

Cable lengths, using		EMI Level (Emission)
Screened cables, filtered units (class A)	25 m	Second Environment, C2[1)]
Screened cables, filtered units (class A)	50 m	Second Environment, C3[1)]
Screened cables, unfiltered units with external filter, class B	50 m	C1[1)]
Screened cables, unfiltered units with external filter, class B plus output choke	150 m	C2[1)]
Screened cables, filtered or unfiltered units	50 m	EMI Standard not fullfilled
Unscreened cables, filtered or unfiltered units	100 m	EMI Standard not fullfilled

1) EMC compliant connection required

Declaration of Conformity
The Declaration of Conformity can be found at the following link:
http://support.automation.siemens.com/WW/view/en/30563514/134200

Siemens AG,
Frauenauracher Str. 80,
DE-91056 Erlangen

Issue 04/2014