⚠ Warnung

Lebensgefahr durch Berührung unter Spannung stehender Teile

Das vorliegende Gerät führt gefährliche Spannungen.
Beim Berühren unter Spannung stehender Teile erleiden Sie Tod oder schwere Körperverletzungen.
Der Betrieb dieses Gerätes erfordert detaillierte Installations- und Betriebsanweisungen, wie sie im Montagehandbuch / der Betriebsanleitung für dieses Gerät enthalten sind.

⚠ Warning

Danger to life when live parts are touched

The present device conducts hazardous voltages.
Touching live components can result in death or severe injury.
Operation of this equipment requires detailed installation and operation instructions provided in the installation/operation manual intended for use with this product.

⚠ 警告

接触带电部件会引发生命危险

本设备会传导危险电压。
接触带电部件可能会造成人员重伤，甚至是死亡。
本设备的运行应根据所配备的安装/操作手册中的详细安装和操作说明进行。

⚠ Attention

Danger de mort en cas de contact avec des pièces sous tension

L'appareil présente des tensions électriques dangereuses.
Tout contact avec des parties sous tension peut entraîner la mort ou des blessures graves.
La mise en œuvre de cet appareil nécessite les instructions détaillées d'installation et de service fournies dans le manuel d'installation/de service correspondant au produit.

⚠ Advertencia

Peligro de muerte al tocar piezas bajo tensión

En el presente equipo hay aplicadas tensiones peligrosas.
Tocar piezas que están bajo tensión puede provocar lesiones corporales graves o incluso la muerte.
El funcionamiento de este equipo requiere unas instrucciones de instalación y servicio detalladas como las que figuran en el manual de montaje o las instrucciones de servicio del mismo.

⚠ Avvertenza

Pericolo di morte per contatto con parti sotto tensione

In questo apparecchio sono presenti tensioni pericolose.
Il contatto con parti sotto tensione può provocare la morte o gravi lesioni.
L'utilizzo di questo apparecchio richiede istruzioni dettagliate per l'installazione e l'esercizio, che sono riportate nel manuale di installazione e d'uso di questo prodotto.

Drill patterns and dimensions

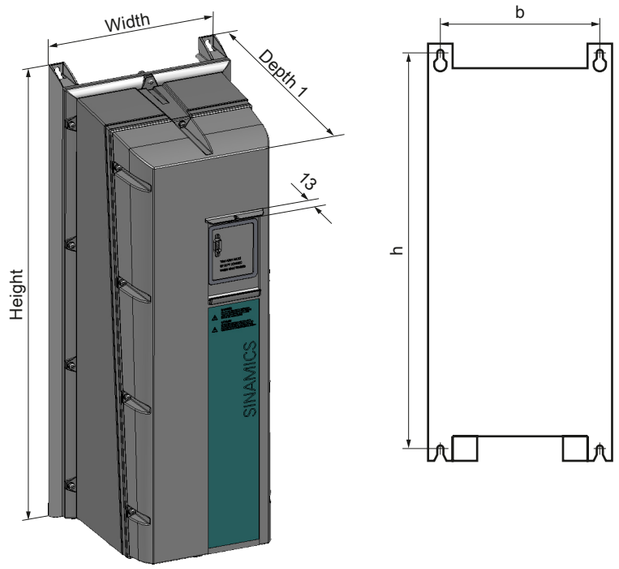

Frame size	Dimensions (mm)					Distances (mm)[1]		Fixings		Drill pattern (mm)	
	Width	Height	Depth			Air flow					
			(T1 + 13)	with BOP-2 or blind cover	with IOP	Above	Below	Screw	Tightening torque (Nm)	b	h
FSA	154	460	249	256	266	100	100	M4	2.5	132	445
FSB	180	540	249	256	266	100	100	M4	2.5	158	524
FSC	230	620	249	256	266	125	125	M5	3.5	208	604

[1] The Power Modules can be mounted side-by-side. Due to tolerance reasons, we recommend a lateral distance of about 1 mm.

Remove / fix cover

(6 screws FSA, 9 screws FSB and FSC)

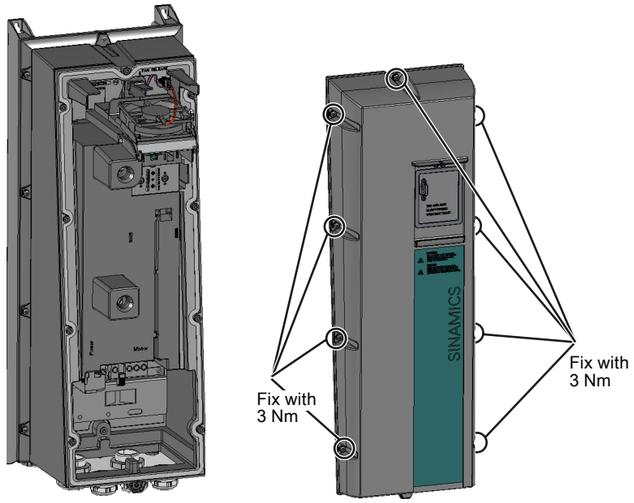

Remove / fix gland plate

(6 screws FSA, 8 screws FSB and FSC,)

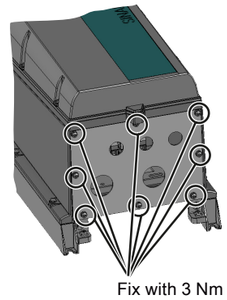

Fitting the Control Unit

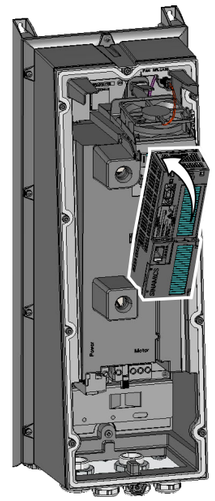

Removing the Control Unit

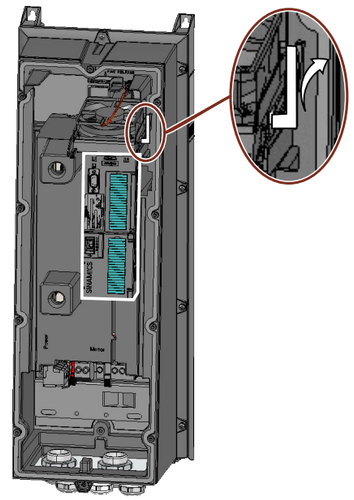

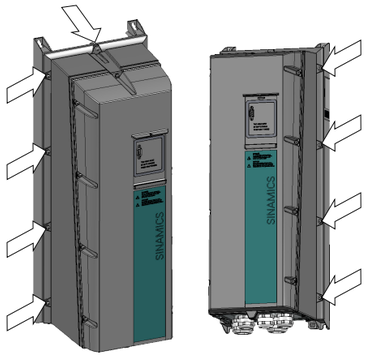

The screws, indicated by the white arrows, connect the heat sink to the inverter housing. These screws must not be loosened or removed.
The FSA variant has a total of 6 screws and the FSB and the FSC variants have a total of 9 screws.

Mains, Motor and Brake terminals

The Power Modules are fitted with detachable terminals. It can be removed from the Power Module by pressing the release catch. The connectors are not interchangeable.

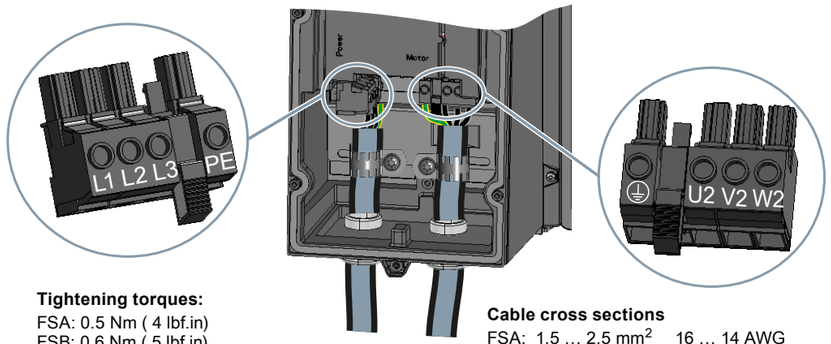

Tightening torques:
FSA: 0.5 Nm (4 lbf.in)
FSB: 0.6 Nm (5 lbf.in)
FSC: 1.5 Nm (13 lbf.in)

Cable cross sections

FSA:	1.5 … 2.5 mm^2	16 … 14 AWG
FSB:	1.5 … 6 mm^2	16 … 10 AWG
FSC:	6 … 16 mm^2	10 … 6 AWG

Direct sunlight not allowed!

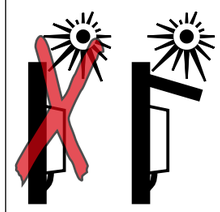

Declaration of Conformity
The Declaration of Conformity can be found at the following link:
http://support.automation.siemens.com/WW/view/en/30563514/134200

A5E35100000A-AA

Siemens AG,
Frauenauracher Str. 80,
DE-91056 Erlangen

Issue 09/2014

Feature	Specification
Line voltage	3 AC 380 V … 480 V ± 10 % up to 2000 m (6600 ft) installation altitude.
Output voltage	3 AC 0 V … input voltage * 0.95
Input frequency	50 Hz … 60 Hz, ± 3 Hz
Output frequency	0 Hz … 550 Hz, depending on the control mode
Power factor λ	0.9
Inrush current	Less than rated input current
Pulse frequency (factory setting)	4 kHz. Can be increased in 2 kHz steps up to 16 kHz. Increasing the pulse frequencies leads to an output current reduction.
Electromagnetic compatibility	The Power Module complies with the following EMC emission requirements at the default settings of the Power Module. • **Conducted emissions**: The devices are suitable for second environment category C1 and C2 in accordance with IEC61800-3. • **Radiated Emissions**: The devices are suitable for second environment category C2
Electromagnetic compatibility	The devices comply with EN 61800-3: 2004 suitable for Category C1 and C2 environments.
Braking methods	DC braking
Environmental rating	IP55 / UL Type 12
Motor overload protection	This equipment is capable of providing internal motor overload protection according to UL508C. The protection level is 115 %, 230 % and 400 % full load current of the equipment. This is adjusted via parameter p0640 and assumes the equipment has had basic motor commissioning for the motor used as described in the documentation.
LO Operation temperature *)	-10 °C … 40 °C (32 °F … 104 °F) without current derating / up to 60 °C (140 °F) with current derating
HO Operating temperature *)	-10 °C … 50 °C (32 °F … 122 °F) without current derating / up to 60 °C (140 °F) with current derating
Storage temperature	- 40 °C … +70 °C (- 40 °F … 158 °F)
Installation altitude above sea level	Up to 1000 m (3300 ft) without derating / Up to 4000 m (13000 ft) with derating
Humidity	< 95% RH - non-condensing
Environmental conditions	Suitable for environmental class 3C2 according to IEC 60721-3-3 against damaging chemical substances
Pollution	Protected from contact with dangerous parts, dust, spray water and water jets
Shock	Long-term storage in the transport packaging according to Class 1M2 of IEC 60721-3-1 : Transport in the transport packaging according to Class 2M3 of IEC 60721-3-2. Operation according to Class 3M2. See Hardware Installation Manual for detailed specifications.
Vibration	Long-term storage in the transport packaging according to Class 1M2 to IEC 60721-3-1 : Transport in the transport packaging according to Class 2M3 to IEC 60721-3-2. Operation according to Class 3M2. See Hardware Installation Manual for detailed specifications.
Line impedance	With Uk ≤ 1 %, a line reactor must not be used
Short Circuit Current Rating (SCCR)	Suitable for use on a circuit capable of delivering not more than 40 kA rms symetrical amperes; 480 Vac maximum when protected by Class J or R/C (JFHR2) semiconductor fuses only as stated

*) according to UL, operation with temperatures > 50 °C (122 °F) is not permitted at all.
The maximum temperature is determined by the component (Power Module, Control Unit or Operator panel) with the lowest maximum temperature

⚠ **CAUTION - Cable cross-section for grounding:** The earth cable must be at least as big as the power cables.

LO base load values			HO base load values			Rated input current	Frame Size	Order No. *)	Line fuses	
Power		Output current	Power		Output current				Acc. To IEC, e.g. Siemens	UL, J type
kW	hp	A	kW	hp	A	A				
0.37	0.5	1.3	0.25	0.34	0.9	1.3	FSA	6SL3223-0DE13-7_A1	3NA3803	10 A
0.55	0.75	1.7	0.37	0.5	1.3	1.8	FSA	6SL3223-0DE15-5_A1	3NA3803	10 A
0.75	1	2.2	0.55	0.75	1.7	2.3	FSA	6SL3223-0DE17-5_A1	3NA3803	10 A
1.1	1.5	3.1	0.75	1	2.2	3.2	FSA	6SL3223-0DE21-1_A1	3NA3803	10 A
1.5	2	4.1	1.1	1.5	3.1	4.2	FSA	6SL3223-0DE21-5_A1	3NA3803	10 A
2.2	3	5.9	1.5	2	4.1	6.1	FSA	6SL3223-0DE22-2_A1	3NA3803	10 A
3	4	7.7	2.2	3	5.9	8	FSA	6SL3223-0DE23-0_A1	3NA3803	10 A
4	5.4	10.2	3	4	7.7	10.5	FSB	6SL3223-0DE24-0_A1	3NA3805	16 A
5.5	7.4	13.2	4	5.4	10.2	13.6	FSB	6SL3223-0DE25-5_A1	3NA3807	25 A
7.5	10	18	5.5	7.4	13.2	18.6	FSB	6SL3223-0DE27-5_A1	3NA3810	35 A
11	14.75	26	7.5	10	18	26.9	FSC	6SL3223-0DE31-1_A1	3NA3814	40 A
15	20	32	11	14.75	26	33.1	FSC	6SL3223-0DE31-5_A1	3NA3820	50 A
18.5	25	38	15	20	32	39.2	FSC	6SL3223-0DE31-8AA1	3NA3820	50 A

*) _: A = filter class A unit, B = filter class B

Cable lengths, using	Cable type	EMC category	
filtered units, class A	screened	second environment, C2	25 m
		second environment, C3	50 m
	unscreened	none	100 m
filtered units, class B	screened	first environment, C1 (conducted emissions only)	25 m *)
		second environment, C2	50 m
	unscreened	none	100 m

*) To fulfill the EMI standard C1 for conducted emissions, use ferrite rings as shown in the figures below

For United States / Canadian installations (UL/cUL): In order that the system is UL/cUL-compliant, use UL/cUL-certified J-type fuses. Use 75° C copper wire only.

Additional requirements for Canadian compliance:
Transient surge suppression must be installed on the line side of this equipment. We recommend a VZCA7 circuit breaker type rated at the following specifications: 480 V (phase to ground), 480 V (phase to phase), suitable for overvoltage category III, provides protection for a VPR maximum of 2 kV and type 1 or type 2 SPD application.

Ferrite rings to fulfill the EMI Standard C1 for conducted emissions

To fulfill the EMI Standard C1 for conducted emissions a Power Module with a class B filter is required.
In addition the blue ferrite must be attached to the motor cable between the screening and the terminals as shown in the figures.
Furthermore for FSB and FSC the grey ferrites must be attached to the line supply cable as shown in the figures.

Ferrite rings to fulfill the EMI Standard C2
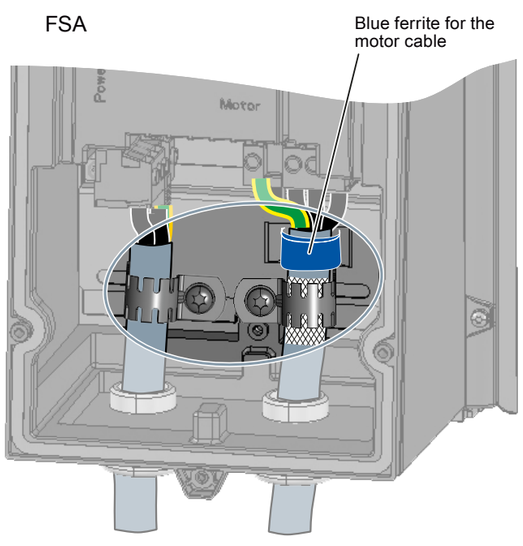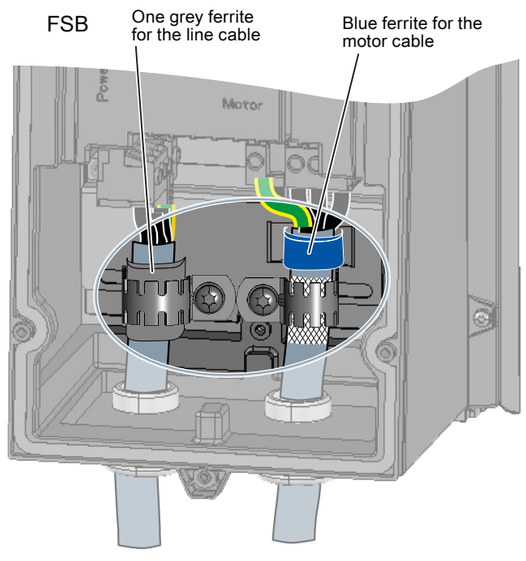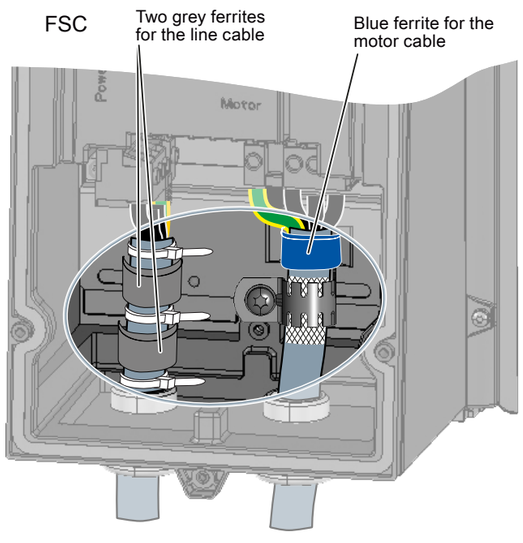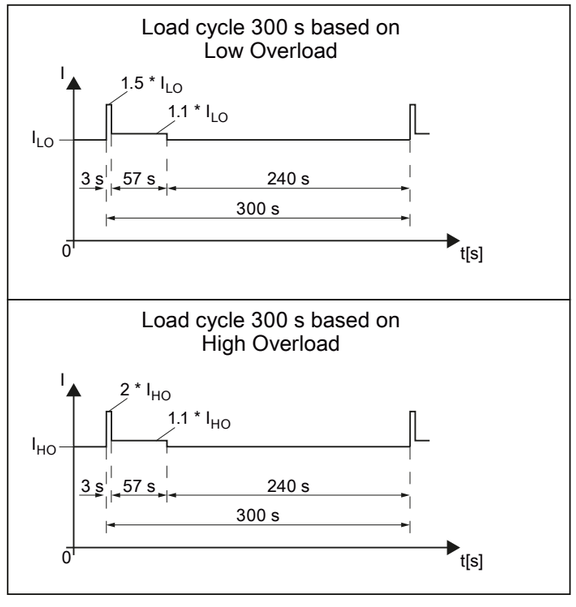
To fulfill the EMI Standard C2 for the Power Modules FSB and FSC, one grey ferrite must be attached to the line supply cable. A ferrite for the motor cable is not required.