SIEMENS

A5W00031103A



RDG200KN
RDG204KN

User manual, documentation and parameters
sid.siemens.com/home

en	Mounting instructions	de	Montageanleitung	es	Instrucciones de montaje
fr	Instructions de montage	it	Istruzioni di montaggio	tr	Montaj talimatlari

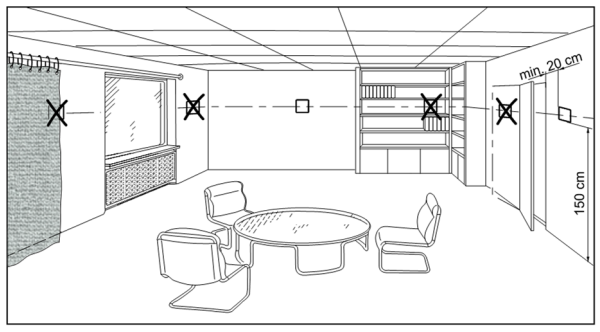

en	Not on metallic surfaces
de	Nicht auf metallischen Oberflächen
es	No en superficies métalicas
fr	Pas sur surfaces métalliques
it	No su superfici metalliche
tr	Metalik yüzeylerde değil

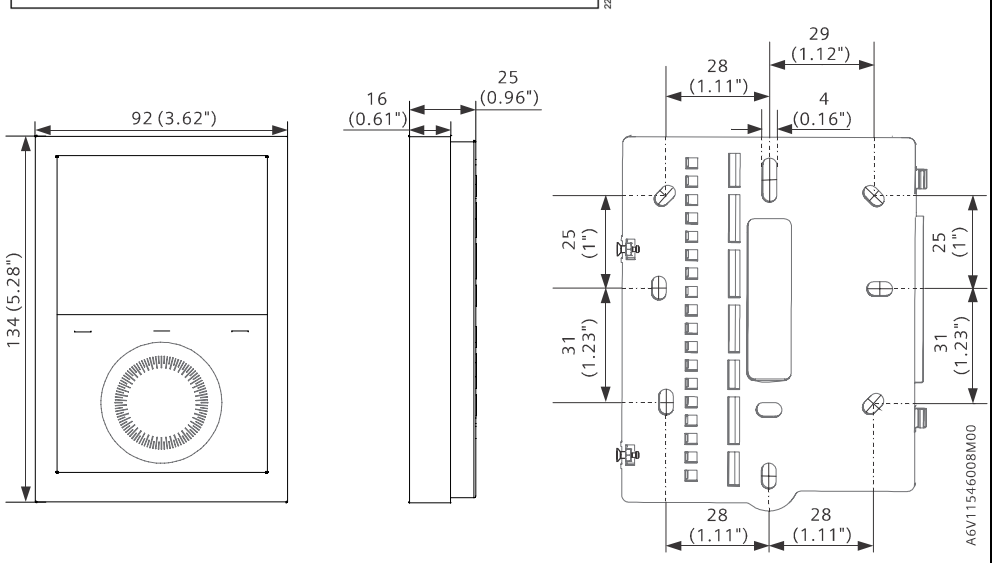

mm (inch)

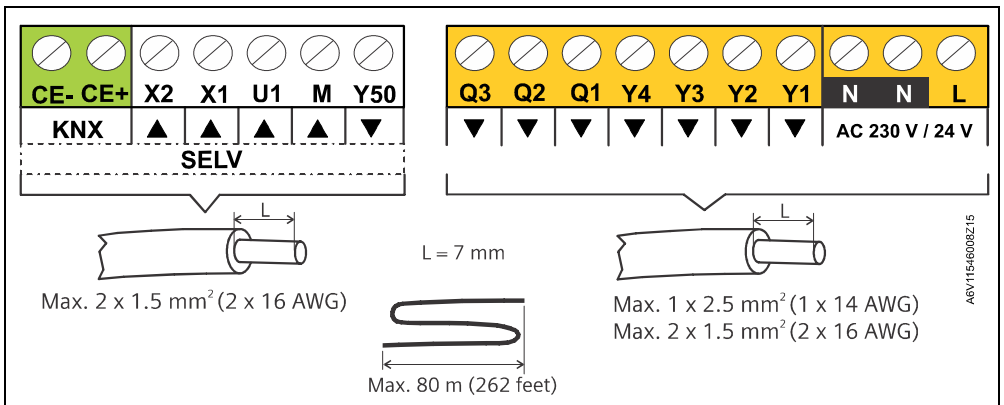

KNX programming mode and commissioning

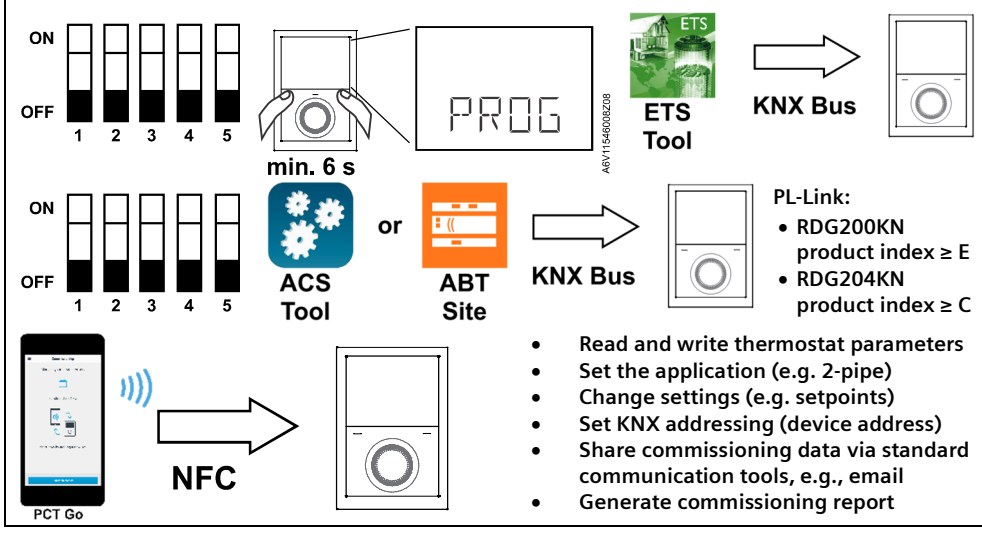

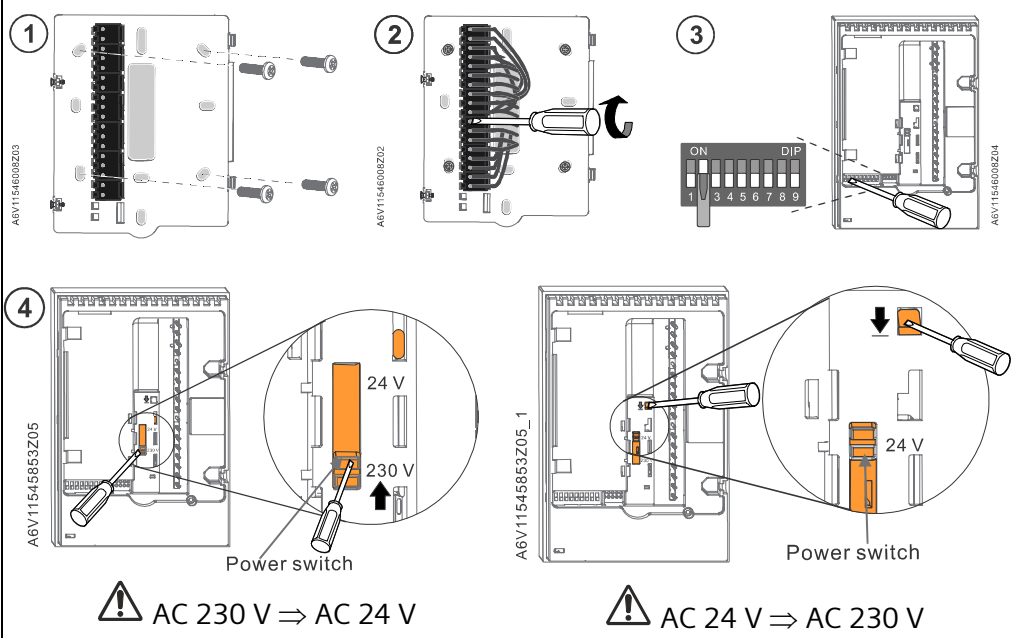

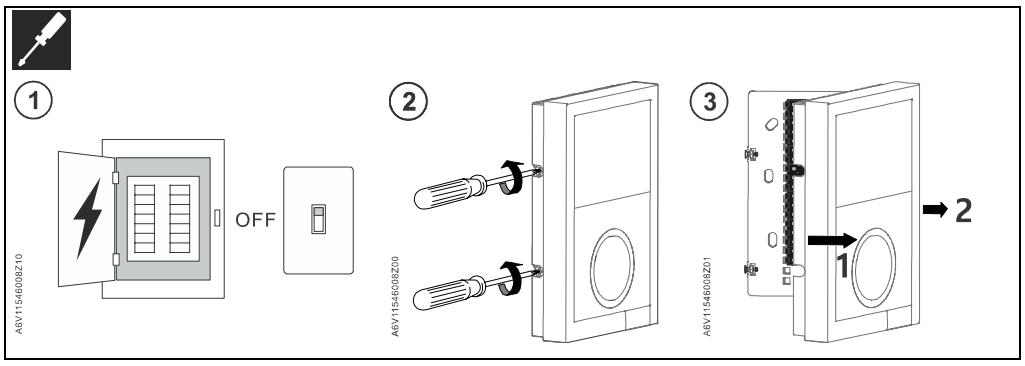

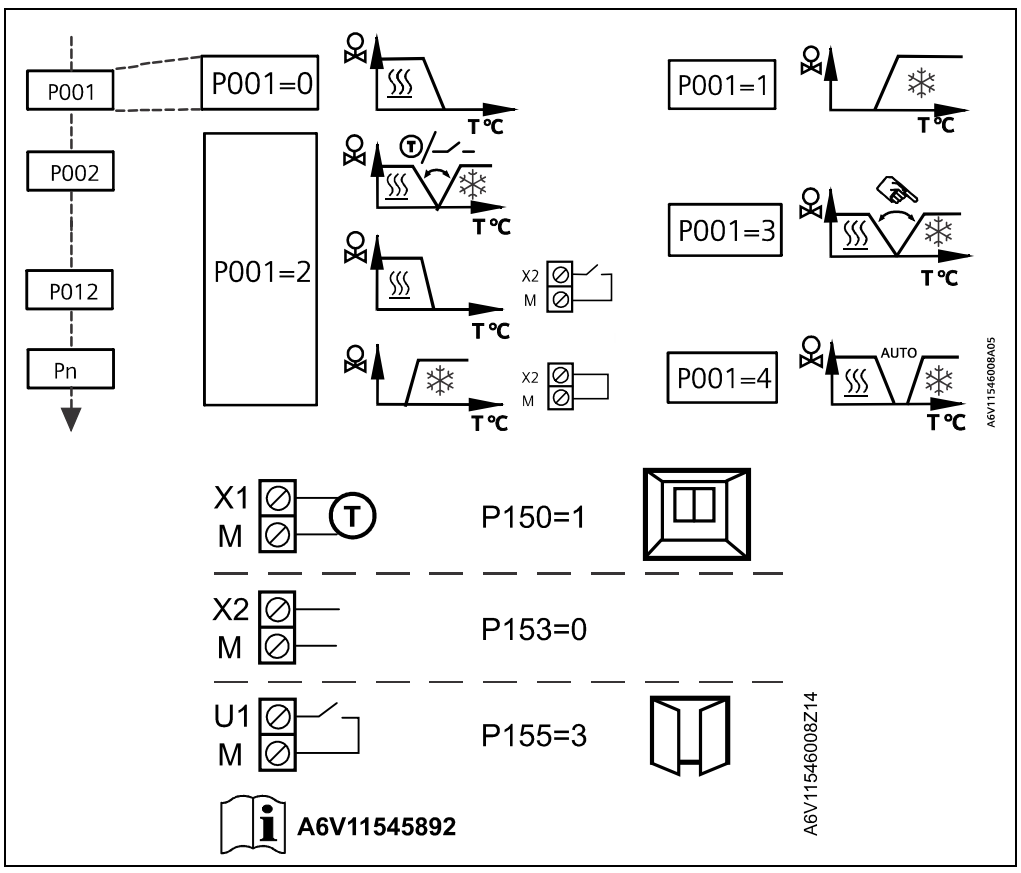

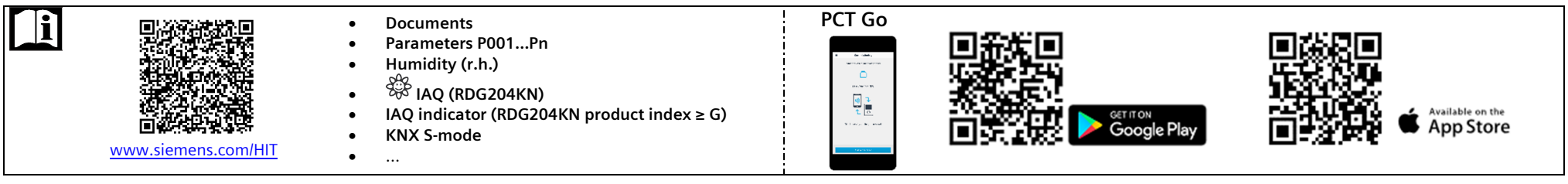

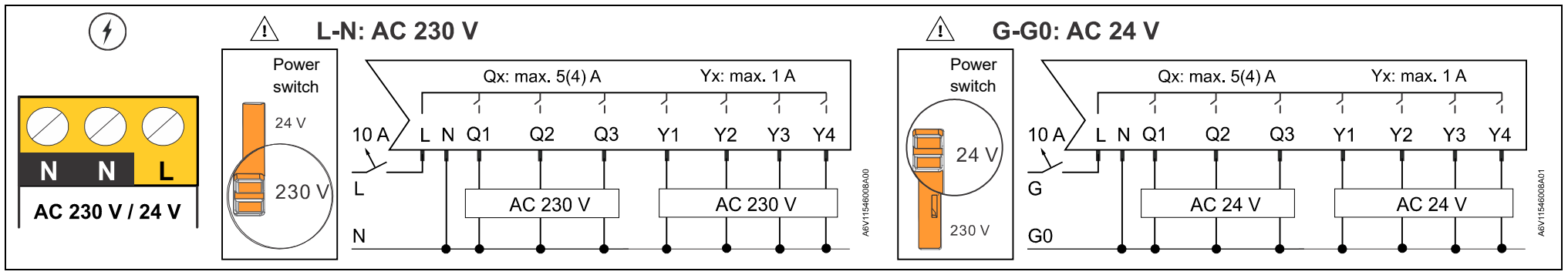

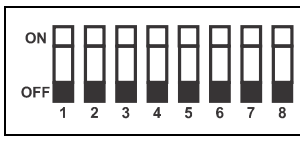

DIP's: ON = ▲ DIP No.: 1...8 OFF = □ DIP No.: 1...8

AC 24 V: G-G0 ⇒ L-N (⊘⊘)

Fan coil

	Fan DC 0...10 V 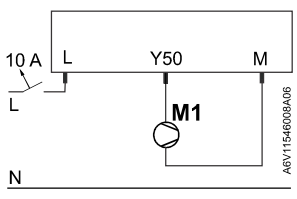	**Fan 3-/1-speed** 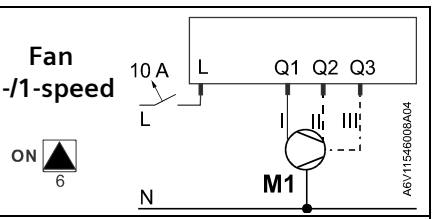
	P350 = 0 (Disabled)	**P350 = 0 (Disabled)**

Application	V1	V2	Outputs					
			2-pos (PWM)	2-pos (PWM)	2-pos (PWM)	3-pos	3-pos	2-pos (PWM)	3-pos	3-pos
② 2-pipe with electric heater 1 ▲ 3 4 5	h/c	E	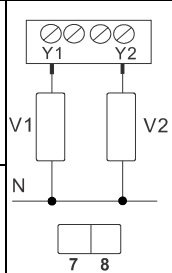		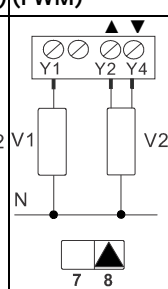		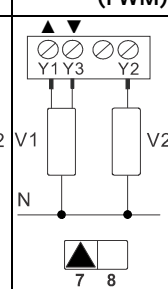		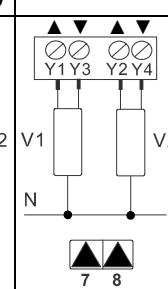	
③ 2-pipe with radiator ▲ ▲ 3 4 5	h/c	RAD								
④ 4-pipe 1 2 ▲ 4 5										
⑤ 2-pipe/ 2-stage ▲ 2 ▲ 4 5	1st	2nd								

Application	V1	V2	V3	Outputs			
				3 × 2-pos (PWM)	2-pos (PWM)	3-pos	2-pos (PWM)
⑥ 4-pipe with electric heater 1 ▲ ▲ 4 5			E	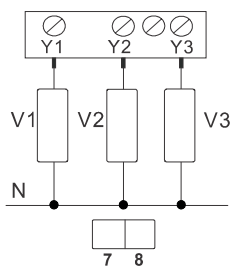	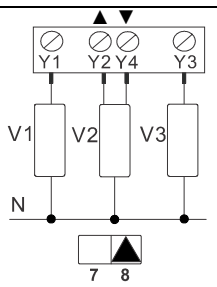		

Application	V1	V2	V3	V4	Outputs
					4 × 2-pos (PWM)
⑦ 4-pipe/ 2-stage ▲ ▲ ▲ 4 5	1st	1st	2nd	2nd	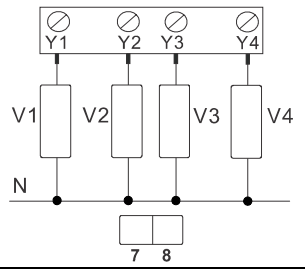

IAQ/CO_2		DC	3-speed	Limits:
	DC	U1	U1	(*): Appl. ②③④⑤⑥ + 3-pos does not support.
	On/Off	Q3	Y4 (*)	

FCU	en	de	es	fr	it	tr
①	2-pipe fan coil	2-Rohr Ventilator-konvektor	Fancoil a dos tubos	Ventiloconvecteur 2 tubes	Fan coil 2 tubi	2 borulu fan coil
②	2-pipe with electric heater	2-Rohranwendung & Elektroheizung	2 tubos & batería eléctrica	Application 2 tubes & batterie électrique	Fan coil 2 tubi con batteria elettrica	2 borulu & elk. Isıtıcı
③	2-pipe with radiator	2-Rohranwendung & Radiator	2 tubos & radiador	Application 2 tubes & radiateur	Fan coil 2 tubi e radiatore	2 borulu & radyatör
④	4-pipe fan coil	4-Rohr Ventilator-konvektor	Fancoil a 4 tubos	Ventiloconvecteur 4 tubes	Fan coil 4 tubi	4 borulu fan coil
⑤	2-pipe/2-stage	2-Rohr/2-stufig	2 tubos/2 etapas	2 tubes/2 étages	2-tubi / 2-stadi	2-borulu/2-kademe
⑥	4-pipe with electric heater	4-Rohranwendung & Elektroheizung	4 tubos & batería eléctrica	Application 4 tubes & batterie électrique	Fan coil 4 tubi con batteria elettrica	4 borulu fan coil & elk. Isıtıcı
⑦	4-pipe/2-stage	4-Rohr/2-stufig	4 tubos/2 etapas	4 tubes/2 étages	4-tubi / 2-stadi	4-borulu/2-kademe

Issued by
Siemens Switzerland Ltd
Smart Infrastructure
Global Headquarters
Theilerstrasse 1a
CH-6300 Zug

© Siemens 2020
Technical specifications and availability subject to change without notice.

Siemens Switzerland Ltd. declares that the radio equipment types RDG200KN and RDG204KN are in compliance with Directive 2014/53/EU. The full text of the EU declaration of conformity is available at http://www.siemens.com/download?A6V12147303.