<ORIGINAL>

MITSUBISHI ELECTRIC

CITY MULTI

Кондиционеры для установки в помещениях, инверторы серии Y

НАРУЖНЫЙ БЛОК

Air-Conditioners For Building Application Inverter Y-Series

OUTDOOR UNIT

PUCY-P-YKD (-BS)

Для использования с моделью R410A

For use with the R410A

GB

INSTALLATION MANUAL

For safe and correct use, please read this installation manual thoroughly before installing the air-conditioner unit.

I

MANUALE DI INSTALLAZIONE

Per un uso sicuro e corretto, leggere attentamente questo manuale di installazione prima di installare il condizionatore d'aria.

TR

MONTAJ ELKİTABI

Emniyetli ve doğru biçimde nasıl kullanılacağını öğrenmek için lütfen klima cihazını monte etmeden önce bu elkitabını dikkatle okuyunuz.

RU

РУКОВОДСТВО ПО УСТАНОВКЕ

Для осторожного и правильного использования прибора необходимо тщательно ознакомиться с данным руководством по установке до выполнения установки кондиционера.

Contents

1. Safety precautions 2
   1.1. Before installation and electric work 2
   1.2. Precautions for devices that use R410A refrigerant 3
   1.3. Before installation 3
   1.4. Before installation (relocation) - electrical work 3
   1.5. Before starting the test run 4
2. About the product 4
3. Combination of outdoor units 4
4. Specifications 5
5. Confirmation of parts attached 6
6. Space required around unit 6
7. Lifting method 8
8. Installation of unit 9
   8.1. Installation 9
9. Refrigerant piping installation 10
   9.1. Caution 10
   9.2. Refrigerant piping system 11
10. Additional refrigerant charge 14
   10.1. Calculation of additional refrigerant charge 14
   10.2. Precautions concerning piping connection and valve operation 15
   10.3. Airtight test, evacuation, and refrigerant charging 17
   10.4. Thermal insulation of refrigerant piping 18
11. Wiring (For details, refer to the installation manual of each indoor/outdoor unit and controller.) 19
   11.1. Caution 19
   11.2. Control box and connecting position of wiring 19
   11.3. Wiring transmission cables 21
   11.4. Wiring of main power supply and equipment capacity 23
12. Test run 25
   12.1. Typical unit operation 25
   12.2. Outdoor unit function setting 25
13. Information on rating plate 26

⚠ Caution:
When connecting two PUCY-P250YKD(-BS) units and a PEV-P500YM-A unit, install them referring to the PUCY-P250YKD(-BS) Installation Manual that came with PEV-P500YM-A.

GB

1. Safety precautions

1.1. Before installation and electric work

- ▶ **Before installing the unit, make sure you read all the "Safety precautions".**
- ▶ **The "Safety precautions" provide very important points regarding safety. Make sure you follow them.**

Symbols used in the text

⚠ Warning:
Describes precautions that should be observed to prevent danger of injury or death to the user.

⚠ Caution:
Describes precautions that should be observed to prevent damage to the unit.

Symbols used in the illustrations

⃠ : Indicates an action that must be avoided.
❗ : Indicates that important instructions must be followed.
⏚ : Indicates a part which must be grounded.
⚠ : Beware of electric shock. (This symbol is displayed on the main unit label.) <Color: yellow>

⚠ Warning:
Carefully read the labels attached to the outdoor unit.

⚠ HIGH VOLTAGE WARNING:
- **Control box houses high-voltage parts.**
- **When opening or closing the front panel of the control box, do not let it come into contact with any of the internal components.**
- **Before inspecting the inside of the control box, turn off the power, keep the unit off for at least 10 minutes, and confirm that the capacitor voltage (inverter main circuit) has dropped to 20 VDC or less. (It takes about 10 minutes to discharge electricity after the power supply is turned off.)**
- **Control box houses high temperature parts. Be well careful even after turning off the power source.**
- **Perform the service after disconnecting the fan board connector (CNINV) and the inverter board connector (CN1). (To plug or unplug connectors, check that the outdoor unit fan is not rotating and that the voltage of capacitor in the main circuit is 20 VDC or below. The capacitor may collect a charge and cause an electric shock when the outdoor unit fan rotates in windy conditions. Refer to the wiring nameplate for details.)**
- **To connect wiring to TB7, check that the voltage is 20 VDC or below.**
- **Reconnect the connector (CNINV) back to the fan board and reconnect the connector (CN1) back to the inverter board after servicing.**

⚠ Warning:
- **Do not use refrigerant other than the type indicated in the manuals provided with the unit and on the nameplate.**
  - Doing so may cause the unit or pipes to burst, or result in explosion or fire during use, during repair, or at the time of disposal of the unit.
  - It may also be in violation of applicable laws.
  - MITSUBISHI ELECTRIC CORPORATION cannot be held responsible for malfunctions or accidents resulting from the use of the wrong type of refrigerant.
- **Ask the dealer or an authorized technician to install the air conditioner.**
  - Improper installation by the user may result in water leakage, electric shock, or fire.
- **This appliance is not intended for use by persons (including children) with reduced physical, sensory or mental capabilities, or lack of experience and knowledge, unless they have been given supervision or instruction concerning use of the appliance by a person responsible for their safety.**
- **This appliance is intended to be used by expert or trained users in shops, in light industry and on farms, or for commercial use by lay persons.**
- **Install the unit at a place that can withstand its weight.**
  - Failure to do so may cause the unit to fall down, resulting in injuries and damage to the unit.
- **Use the specified cables for wiring. Make the connections securely so that the outside force of the cable is not applied to the terminals.**
  - Inadequate connection and fastening may generate heat and cause a fire.
- **Prepare for strong winds and earthquakes and install the unit at the specified place.**
  - Improper installation may cause the unit to topple and result in injury and damage to the unit.
- **Always use filters and other accessories specified by Mitsubishi Electric.**
  - Ask an authorized technician to install the accessories. Improper installation by the user may result in water leakage, electric shock, or fire.
- **Never attempt to repair the unit without the proper qualifications. If the air conditioner must be repaired consult the dealer, contractor or qualified Refrigeration Engineer.**
  - If the unit is repaired improperly, water leakage, electric shock, or fire may result.
- **If the supply cord is damaged, it must be replaced by the manufacturer, its service agent or similarly qualified persons in order to avoid a hazard.**
- **Do not touch the heat exchanger fins.**
  - Improper handling may result in injury.
- **If refrigerant gas leaks during installation work, ventilate the room.**
  - If the refrigerant gas comes into contact with a flame, poisonous gases will be released.
- **Install the air conditioner according to this Installation Manual.**
  - If the unit is installed improperly, water leakage, electric shock, or fire may result.
- **Have all electric work done by a licensed electrician according to the "Electric Facility Engineering Standard", the "Wire Regulations in each area" and the instructions given in this manual and always use a dedicated power supply.**
  - If the power source capacity is inadequate or electric work is performed improperly, electric shock and fire may result.
- **Securely install the outdoor unit terminal cover (panel).**
  - If the terminal cover (panel) is not installed properly, dust or water may enter the outdoor unit and fire or electric shock may result.
- **When installing and moving the air conditioner to another site, do not charge it with a refrigerant different from the refrigerant specified on the unit.**
  - If a different refrigerant or air is mixed with the original refrigerant, the refrigerant cycle may malfunction and the unit may be damaged.
- **If the air conditioner is installed in a small room, measures must be taken to prevent the refrigerant concentration from exceeding the safety limit if the refrigerant should leak.**
  - Consult the dealer regarding the appropriate measures to prevent the safety limit from being exceeded. Should the refrigerant leak and cause the safety limit to be exceeded, hazards due to lack of oxygen in the room could result.

- **When moving and reinstalling the air conditioner, consult the dealer or an authorized technician.**
  - If the air conditioner is installed improperly, water leakage, electric shock, or fire may result.
- **After completing installation work, make sure that refrigerant gas is not leaking.**
  - If the refrigerant gas leaks and is exposed to a fan heater, stove, oven, or other heat source, it may generate noxious gases.
- **Do not reconstruct or change the settings of the protection devices.**
  - If the pressure switch, thermal switch, or other protection device is shorted or operated forcibly, or parts other than those specified by Mitsubishi Electric are used, fire or explosion may result.
- **To dispose of this product, consult your dealer.**
- **The installer and system specialist shall secure safety against leakage according to local regulation or standards.**
  - Choose the appropriate wire size and the switch capacities for the main power supply described in this manual if local regulations are not available.
- **Pay special attention to the place of installation, such as a basement, etc. where refrigeration gas can accumulate, since refrigerant is heavier than the air.**
- **For outdoor units that allow outside air intake to the indoor unit, the installation site must be carefully chosen to ensure only clean air can enter the room.**
  - Direct exposure to outdoor air may have harmful effects on people or food.
- **Children should be supervised to ensure that they do not play with the appliance.**

1.2. Precautions for devices that use R410A refrigerant

⚠ Caution:

- **Do not use existing refrigerant piping.**
  - The old refrigerant and refrigerant oil in the existing piping contains a large amount of chlorine which may cause the refrigerant oil of the new unit to deteriorate.
  - R410A is a high-pressure refrigerant and can cause the existing piping to burst.
- **Use refrigerant piping made of phosphorus deoxidized copper and copper alloy seamless pipes and tubes. In addition, be sure that the inner and outer surfaces of the pipes are clean and free of hazardous sulphur, oxides, dust/dirt, shaving particles, oils, moisture, or any other contaminant.**
  - Contaminants on the inside of the refrigerant piping may cause the refrigerant oil to deteriorate.
- **Store the piping to be used during installation indoors and keep both ends of the piping sealed until just before brazing. (Store elbows and other joints in a plastic bag.)**
  - If dust, dirt, or water enters the refrigerant cycle, deterioration of the oil and compressor failure may result.
- **Apply only a small amount of ester oil, ether oil, or alkyl benzene to flare connections (for indoor unit).**
  - Infiltration of a large amount of mineral oil may cause the refrigerant oil to deteriorate.
- **Use liquid refrigerant to fill the system.**
  - If gas refrigerant is used to fill the system, the composition of the refrigerant in the cylinder will change and performance may drop.
- **Do not use a refrigerant other than R410A.**
  - If another refrigerant (R22, etc.) is mixed with R410A, the chlorine in the refrigerant may cause the refrigerant oil to deteriorate.
- **Use a vacuum pump with a reverse flow check valve.**
  - The vacuum pump oil may flow back into the refrigerant cycle and cause the refrigerant oil to deteriorate.
- **Do not use the following tools that are used with conventional refrigerants.**
  (Gauge manifold, charge hose, gas leak detector, reverse flow check valve, refrigerant charge base, refrigerant recovery equipment)
  - If the conventional refrigerant and refrigerant oil are mixed in the R410A, the refrigerant may deteriorate.
  - If water is mixed in the R410A, the refrigerant oil may deteriorate.
  - Since R410A does not contain any chlorine, gas leak detectors for conventional refrigerants will not react to it.
- **Do not use a charging cylinder.**
  - Using a charging cylinder may cause the refrigerant to deteriorate.
- **Be especially careful when managing the tools.**
  - If dust, dirt, or water gets into the refrigerant cycle, the refrigerant may deteriorate.

1.3. Before installation

⚠ Caution:

- **Do not install the unit where combustible gas may leak.**
  - If the gas leaks and accumulates around the unit, an explosion may result.
- **Do not use the air conditioner where food, pets, plants, precision instruments, or artwork are kept.**
  - The quality of the food, etc. may deteriorate.
- **Do not use the air conditioner in special environments.**
  - Oil, steam, sulfuric smoke, etc. can significantly reduce the performance of the air conditioner or damage its parts.
- **When installing the unit in a hospital, communication station, or similar place, provide sufficient protection against noise.**
  - Inverter equipment, private power generator, high-frequency medical equipment, or radio communication equipment may cause the air conditioner to operate erroneously, or fail to operate. On the other hand, the air conditioner may affect such equipment by creating noise that disturbs medical treatment or image broadcasting.
- **Do not install the unit on or over things that are subject to water damage.**
  - When the room humidity exceeds 80% or when the drain pipe is clogged, condensation may drip from the indoor unit. Perform collective drainage work together with the outdoor unit, as required.

1.4. Before installation (relocation) - electrical work

⚠ Caution:

- **Ground the unit.**
  - Do not connect the ground wire to gas or water pipes, lightning rods, or telephone ground lines. Improper grounding may result in electric shock.
- **Never connect in reverse phases.**
  Never connect the Power Line L1, L2, and L3 to Terminal N.
  - If the unit is miss wired, when power is supplied, some electrical parts will be damaged.
- **Install the power cable so that tension is not applied to the cable.**
  - Tension may cause the cable to break and generate heat and cause a fire.
- **Install a leak circuit breaker for an inverter, as required.**
  - If a leak circuit breaker is not installed, electric shock may result.
- **Use power line cables of sufficient current carrying capacity and rating.**
  - Cables that are too small may leak, generate heat, and cause a fire.
- **Use only a circuit breaker and fuse of the specified capacity.**
  - A fuse or circuit breaker of a larger capacity, or the use of a substitute simple steel or copper wire may result in a general unit failure or fire.
- **If a large electric current flows due to malfunction or faulty wiring, earth-leakage breakers on the unit side and on the upstream side of the power supply system may both operate.**
  Depending on the importance of the system, separate the power supply system or take protective coordination of breakers.
- **Do not touch the electrical parts with bare hands while the unit is in operation or immediately after operation.**
  - Doing so may result in burns.
- **Do not wash the air conditioner units.**
  - Washing them may cause an electric shock.
- **Be careful that the installation base is not damaged by long use.**
  - If the damage is left uncorrected, the unit may fall and cause personal injury or property damage.
- **Install the drain piping according to this Installation Manual to ensure proper drainage. Wrap thermal insulation around the pipes to prevent condensation.**
  - Improper drain piping may cause water leakage causing damage to furniture and other possessions.
- **Be very careful about transporting the product.**
  - One person should not carry the product. Its weight is in excess of 20 kg.
  - Some products use PP bands for packaging. Do not use any PP bands as a means of transportation. It is dangerous.
  - Do not touch the heat exchanger fins. Doing so may cut your fingers.
  - When transporting the outdoor unit, support it at the specified positions on the unit base. Also support the outdoor unit at four points so that it cannot slip sideways.
- **Safely dispose of the packing materials.**
  - Packing materials, such as nails and other metal or wooden parts, may cause stabs or other injuries.
  - Tear apart and throw away plastic packaging bags so that children will not play with them. If children play with a plastic bag which has not been torn apart, they face the risk of suffocation.
- **When the power is turned on, the compressor is energized even while it is not operating.**
  - Before turning on the power, disconnect all power supply wires from the compressor terminal block, and measure the insulation resistance of the compressor.
  - Check the compressor for a ground fault. If the insulation resistance is 1.0 MΩ or below, connect all power supply wires to the compressor and turn on the power to the outdoor unit. (The liquid refrigerant in the compressor will evaporate by energizing the compressor.)

1.5. Before starting the test run

⚠ Caution:

- **Turn on the power at least 12 hours before starting operation.**
  - Starting operation immediately after turning on the main power switch can result in irreversible damage to internal parts. Keep the power switch turned on during the operational season. Make sure of the phase order of power supply and voltage between each phase.
- **Do not touch the switches with wet fingers.**
  - Touching a switch with wet fingers can result in an electric shock.
- **Do not touch the refrigerant pipes during and immediately after operation.**
  - During and immediately after operation, the refrigerant pipes may be hot or cold, depending on the condition of the refrigerant flowing through the refrigerant piping, compressor, and other refrigerant cycle parts. Your hands may suffer burns or frostbite if you touch the refrigerant pipes.
- **Do not operate the air conditioner with the panels and guards removed.**
  - Rotating, hot, or high-voltage parts can cause injuries.
- **Do not turn off the power immediately after stopping operation.**
  - Always wait at least 5 minutes before turning off the power. Otherwise, drainage water leakage or mechanical failure of sensitive parts may occur.
- **Do not touch the surface of the compressor during servicing.**
  - If the unit is connected to a supply and not running, the crank case heater located at the base of the compressor may still be operating.

2. About the product

GB

- This unit uses R410A-type refrigerant
- Piping for systems using R410A may be different from that for systems using conventional refrigerant because the design pressure in systems using R410A is higher. Refer to the Data Book for more information.
- Some of the tools and equipment used for installation with systems that use other types of refrigerant cannot be used with the systems using R410A. Refer to the Data Book for more information.
- Do not use the existing piping, as it contains chlorine, which is found in conventional refrigerating machine oil and refrigerant. This chlorine will deteriorate the refrigerant machine oil in the new equipment. The existing piping must not be used as the design pressure in systems using R410A is higher than that in the systems using other types of refrigerant and the existing pipes may burst.

3. Combination of outdoor units

Component units of PUCY-P550 to P1500YSKD(-BS) and PUCY-EP400 to EP1100YSKD(-BS) are listed below.

PUCY-P-Y(S)KD

Outdoor unit model	Component unit model		
PUCY-P200YKD(-BS)	-	-	-
PUCY-P250YKD(-BS)	-	-	-
PUCY-P300YKD(-BS)	-	-	-
PUCY-P350YKD(-BS)	-	-	-
PUCY-P400YKD(-BS)	-	-	-
PUCY-P450YKD(-BS)	-	-	-
PUCY-P500YKD(-BS)	-	-	-
PUCY-P550YSKD(-BS)	PUCY-P300YKD(-BS)	PUCY-P250YKD(-BS)	-
PUCY-P600YSKD(-BS)	PUCY-P350YKD(-BS)	PUCY-P250YKD(-BS)	-
PUCY-P650YSKD(-BS)	PUCY-P400YKD(-BS)	PUCY-P250YKD(-BS)	-
PUCY-P700YSKD(-BS)	PUCY-P450YKD(-BS)	PUCY-P250YKD(-BS)	-
PUCY-P750YSKD(-BS)	PUCY-P450YKD(-BS)	PUCY-P300YKD(-BS)	-
PUCY-P800YSKD(-BS)	PUCY-P400YKD(-BS)	PUCY-P400YKD(-BS)	-
PUCY-P850YSKD(-BS)	PUCY-P450YKD(-BS)	PUCY-P400YKD(-BS)	-
PUCY-P900YSKD(-BS)	PUCY-P450YKD(-BS)	PUCY-P450YKD(-BS)	-
PUCY-P950YSKD(-BS)	PUCY-P500YKD(-BS)	PUCY-P450YKD(-BS)	-
PUCY-P1000YSKD(-BS)	PUCY-P500YKD(-BS)	PUCY-P500YKD(-BS)	-
PUCY-P1050YSKD(-BS)	PUCY-P450YKD(-BS)	PUCY-P300YKD(-BS)	PUCY-P300YKD(-BS)
PUCY-P1100YSKD(-BS)	PUCY-P450YKD(-BS)	PUCY-P350YKD(-BS)	PUCY-P300YKD(-BS)
PUCY-P1150YSKD(-BS)	PUCY-P400YKD(-BS)	PUCY-P400YKD(-BS)	PUCY-P350YKD(-BS)
PUCY-P1200YSKD(-BS)	PUCY-P400YKD(-BS)	PUCY-P400YKD(-BS)	PUCY-P400YKD(-BS)
PUCY-P1250YSKD(-BS)	PUCY-P450YKD(-BS)	PUCY-P400YKD(-BS)	PUCY-P400YKD(-BS)
PUCY-P1300YSKD(-BS)	PUCY-P450YKD(-BS)	PUCY-P450YKD(-BS)	PUCY-P400YKD(-BS)
PUCY-P1350YSKD(-BS)	PUCY-P450YKD(-BS)	PUCY-P450YKD(-BS)	PUCY-P450YKD(-BS)
PUCY-P1400YSKD(-BS)	PUCY-P500YKD(-BS)	PUCY-P450YKD(-BS)	PUCY-P450YKD(-BS)
PUCY-P1450YSKD(-BS)	PUCY-P500YKD(-BS)	PUCY-P500YKD(-BS)	PUCY-P450YKD(-BS)
PUCY-P1500YSKD(-BS)	PUCY-P500YKD(-BS)	PUCY-P500YKD(-BS)	PUCY-P500YKD(-BS)

*PUCY-P550 to P1500YSKD(-BS) require “Twinning KIT” to connect component unit modules in the field.

PUCY-EP-YSKD

Outdoor unit model	Component unit model		
PUCY-EP400YSKD(-BS)	PUCY-P200YKD(-BS)	PUCY-P200YKD(-BS)	-
PUCY-EP450YSKD(-BS)	PUCY-P250YKD(-BS)	PUCY-P200YKD(-BS)	-
PUCY-EP500YSKD(-BS)	PUCY-P250YKD(-BS)	PUCY-P250YKD(-BS)	-
PUCY-EP650YSKD(-BS)	PUCY-P350YKD(-BS)	PUCY-P300YKD(-BS)	-
PUCY-EP700YSKD(-BS)	PUCY-P350YKD(-BS)	PUCY-P350YKD(-BS)	-
PUCY-EP750YSKD(-BS)	PUCY-P350YKD(-BS)	PUCY-P200YKD(-BS)	PUCY-P200YKD(-BS)
PUCY-EP800YSKD(-BS)	PUCY-P350YKD(-BS)	PUCY-P250YKD(-BS)	PUCY-P200YKD(-BS)
PUCY-EP850YSKD(-BS)	PUCY-P350YKD(-BS)	PUCY-P250YKD(-BS)	PUCY-P250YKD(-BS)
PUCY-EP900YSKD(-BS)	PUCY-P350YKD(-BS)	PUCY-P300YKD(-BS)	PUCY-P250YKD(-BS)
PUCY-EP950YSKD(-BS)	PUCY-P350YKD(-BS)	PUCY-P300YKD(-BS)	PUCY-P300YKD(-BS)
PUCY-EP1000YSKD(-BS)	PUCY-P350YKD(-BS)	PUCY-P350YKD(-BS)	PUCY-P300YKD(-BS)
PUCY-EP1050YSKD(-BS)	PUCY-P350YKD(-BS)	PUCY-P350YKD(-BS)	PUCY-P350YKD(-BS)
PUCY-EP1100YSKD(-BS)	PUCY-P400YKD(-BS)	PUCY-P350YKD(-BS)	PUCY-P350YKD(-BS)

*PUCY-EP400 to EP1100YSKD(-BS) require “Twinning KIT” to connect component unit modules in the field.

4. Specifications

PUCY-P-Y(S)KD

Model		PUCY-P200YKD	PUCY-P250YKD	PUCY-P300YKD	PUCY-P350YKD	PUCY-P400YKD	PUCY-P450YKD	PUCY-P500YKD	PUCY-P550YSKD	PUCY-P600YSKD
Power input (kW)	Cooling	4.66	5.95	7.82	9.66	12.42	14.32	16.51	14.04	15.34
Noise level (50/60Hz)		57dB<A>	58dB<A>	61dB<A>	61dB<A>	63dB<A>	63dB<A>	65dB<A>	63dB<A>	63dB<A>
External static pressure		0 Pa*2								
Indoor units	Total capacity	50 ~ 130%*1								
	Model	15 ~ 250								
	Quantity	1 ~ 17	1 ~ 21	1 ~ 26	1 ~ 30	1 ~ 34	1 ~ 39	1 ~ 43	2 ~ 47	2 ~ 50
Operation temperature	Standard type	Cooling mode: 10°CDB ~ 52°CDB								
	Fresh air intake type	Cooling mode: 21°CDB ~ 43°CDB								

Model		PUCY-P650YSKD	PUCY-P700YSKD	PUCY-P750YSKD	PUCY-P800YSKD	PUCY-P850YSKD	PUCY-P900YSKD	PUCY-P950YSKD	PUCY-P1000YSKD	PUCY-P1050YSKD
Power input (kW)	Cooling	17.73	19.24	21.79	25.00	26.97	29.00	31.51	34.04	29.63
Noise level (50/60Hz)		64.5dB<A>	64.5dB<A>	65.5dB<A>	66dB<A>	66dB<A>	66dB<A>	67.5dB<A>	68dB<A>	66.5dB<A>
External static pressure		0 Pa*2								
Indoor units	Total capacity	50 ~ 130%*1								
	Model	15 ~ 250								
	Quantity	2 ~ 50	2 ~ 50	2 ~ 50	2 ~ 50	2 ~ 50	2 ~ 50	2 ~ 50	2 ~ 50	2 ~ 50
Operation temperature	Standard type	Cooling mode: 10°CDB ~ 52°CDB								
	Fresh air intake type	Cooling mode: 21°CDB ~ 43°CDB								

Model		PUCY-P1100YSKD	PUCY-P1150YSKD	PUCY-P1200YSKD	PUCY-P1250YSKD	PUCY-P1300YSKD	PUCY-P1350YSKD	PUCY-P1400YSKD	PUCY-P1450YSKD	PUCY-P1500YSKD
Power input (kW)	Cooling	30.99	33.95	37.50	39.42	41.54	43.63	46.06	48.63	51.06
Noise level (50/60Hz)		66.5dB<A>	67.5dB<A>	68dB<A>	68dB<A>	68dB<A>	68dB<A>	69dB<A>	69.5dB<A>	70dB<A>
External static pressure		0 Pa*2								
Indoor units	Total capacity	50 ~ 130%*1								
	Model	15 ~ 250								
	Quantity	2 ~ 50	2 ~ 50	2 ~ 50	2 ~ 50	2 ~ 50	2 ~ 50	2 ~ 50	2 ~ 50	2 ~ 50
Operation temperature	Standard type	Cooling mode: 10°CDB ~ 52°CDB								
	Fresh air intake type	Cooling mode: 21°CDB ~ 43°CDB								

PUCY-EP-YSKD

Model		PUCY-EP400YSKD	PUCY-EP450YSKD	PUCY-EP500YSKD	PUCY-EP650YSKD	PUCY-EP700YSKD	PUCY-EP750YSKD	PUCY-EP800YSKD	PUCY-EP850YSKD	PUCY-EP900YSKD
Power input (kW)	Cooling	9.93	11.37	12.84	18.32	19.75	19.44	20.97	22.53	24.57
Noise level (50/60Hz)		60dB<A>	60.5dB<A>	61dB<A>	64dB<A>	64dB<A>	64dB<A>	64dB<A>	64dB<A>	65dB<A>
External static pressure		0 Pa*2								
Indoor units	Total capacity	50 ~ 130%*1								
	Model	15 ~ 250								
	Quantity	1 ~ 34	1 ~ 39	1 ~ 43	2 ~ 50	2 ~ 50	2 ~ 50	2 ~ 50	2 ~ 50	2 ~ 50
Operation temperature	Standard type	Cooling mode: 10°CDB ~ 52°CDB								
	Fresh air intake type	Cooling mode: 21°CDB ~ 43°CDB								

Model		PUCY-EP950YSKD	PUCY-EP1000YSKD	PUCY-EP1050YSKD	PUCY-EP1100YSKD
Power input (kW)	Cooling	26.81	28.80	29.62	32.37
Noise level (50/60Hz)		66dB<A>	66dB<A>	66dB<A>	67dB<A>
External static pressure		0 Pa*2			
Indoor units	Total capacity	50 ~ 130%*1			
	Model	15 ~ 250			
	Quantity	2 ~ 50	2 ~ 50	2 ~ 50	2 ~ 50
Operation temperature	Standard type	Cooling mode: 10°CDB ~ 52°CDB			
	Fresh air intake type	Cooling mode: 21°CDB ~ 43°CDB			

*1: The total indoor capacity of units run simultaneously is 130% or less.
*2: To enable high static pressure, set the DipSW on the main panel as follows.
SW6-4: ON, SW6-5 60Pa compatible: OFF, 30Pa compatible: ON

GB

5. Confirmation of parts attached

- This unit includes the following parts. Please check.
- For usage methods, refer to item 10.2.

No.	①Connecting pipe ID ø19.05, OD ø22.2 <Gas side>	②Connecting pipe ID ø25.4, OD ø22.2 <Gas side>	③Connecting elbow ID ø28.58, OD ø28.58 <Gas side>	④Connecting pipe ID ø9.52, OD ø9.52 <Liquid side>	⑤Connecting pipe ID ø9.52, OD ø12.7 <Liquid side>	⑥Connecting pipe ID ø12.7, OD ø12.7 <Liquid side>	⑦Connecting pipe ID ø12.7, OD ø9.52 <Liquid side>	⑧Connecting pipe ID ø15.88, OD ø15.88 <Liquid side>	⑨Connecting pipe ID ø15.88, OD ø12.7 <Liquid side>
P200	1			1					
P250		1		1	1				
P300		1				1	1		
P350			1					1	1
P400			1					1	1
P450			1					1	
P500			1					1	

6. Space required around unit

GB

① **In case of single installation**

- Secure enough space around the unit as shown in the figure.
- If the wall height exceeds the height limit, widen the space labeled "L" and "W" by the amount that exceeds the limit (labeled <h> in the figure).

[Fig. 6.0.1]

(1) Walls are lower than the height limit.

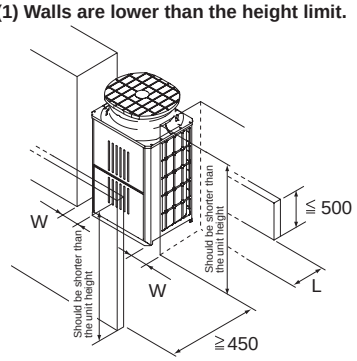

Condition	L	W
Minimum space behind the unit	≧ 100	≧ 50
Minimum space on both sides of the unit	≧ 300	≧ 15

(2) If the wall height (H) of the front, rear or side exceeds the wall height restriction

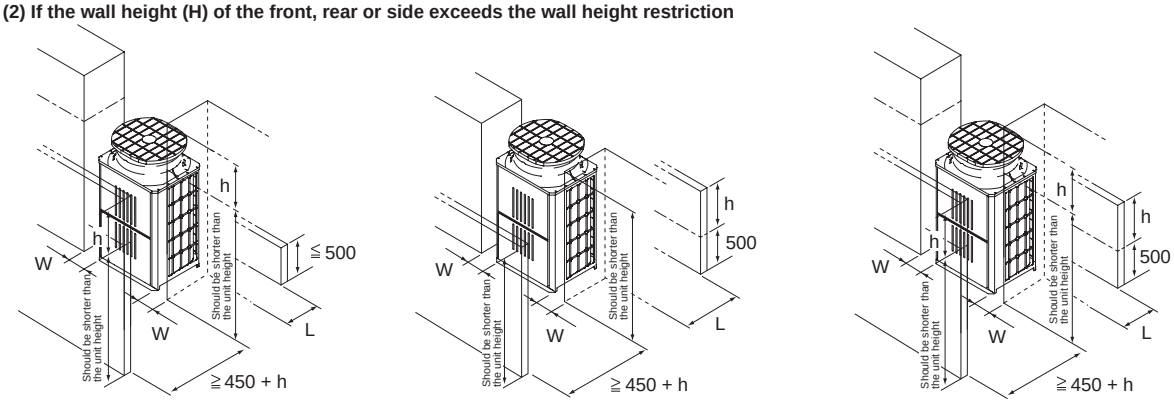

Condition	L	W
Minimum space behind the unit	≧ 100 + h	≧ 50 + h
Minimum space on both sides of the unit	≧ 300 + h	≧ 15 + h

(3) If there are obstacles at the upper part of the unit

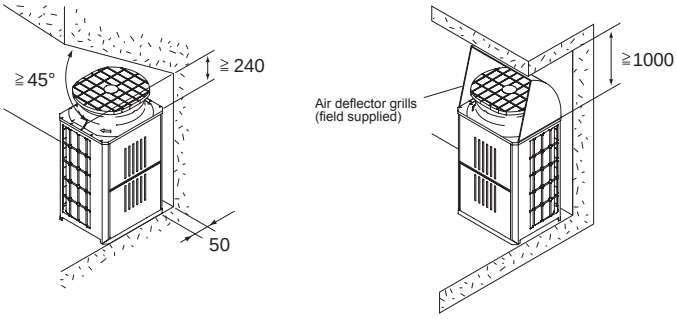

(Unit : mm)

② **In case of collective installation and continuous installation**

- When multiple units are installed adjacent to each other, secure enough space to allow for air circulation and passageways between groups of units as shown in the figures.
  * Leave both sides of each group of units open.
- As with single installation, if the wall height exceeds the height limit, widen the space in the front and the back of a given group of units by the amount that exceeds the limit (labeled <h> in the figure).
- If there is a wall at both the front and the rear of the unit, install up to six units (three units : P500) consecutively in the side direction and provide a space of 1000 mm or more as inlet space/passage space for each six units (three units : P500).

[Fig. 6.0.2]

(1) Side-by-side installation

<The space on both sides of a given group of units is minimum.>

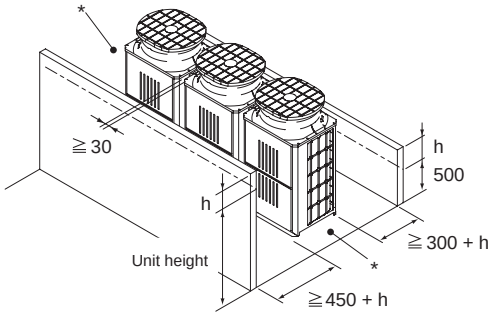

<The space on both sides of a given group of units is minimum.>

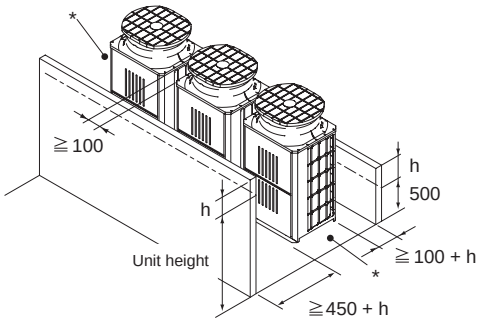

(2) Face-to-face installation

<There are walls in the front and the back of a given group of units.>

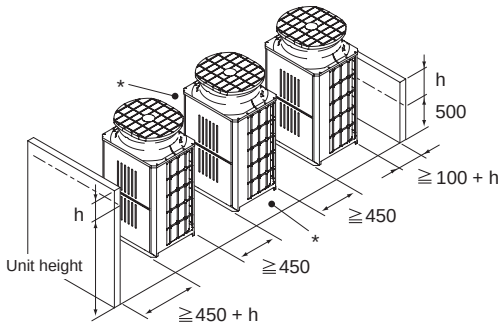

<There is a wall on one side.>

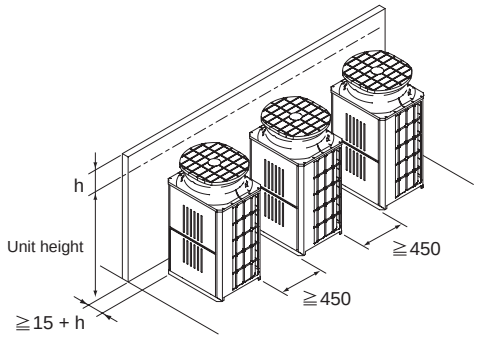

(3) Combination of face-to-face and side-by-side installations

<There are walls in the front and the back of a given group of units.>

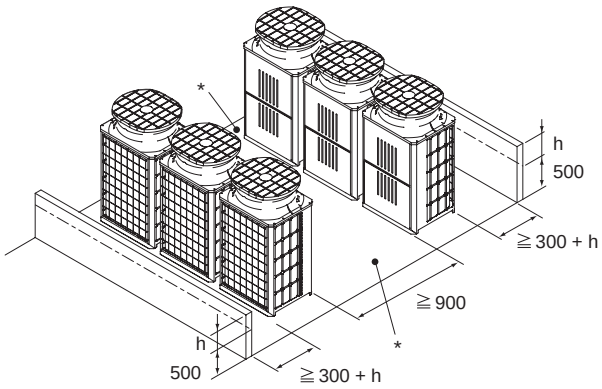

<There is a wall on one side and either the front or the back of a given group of unit.>

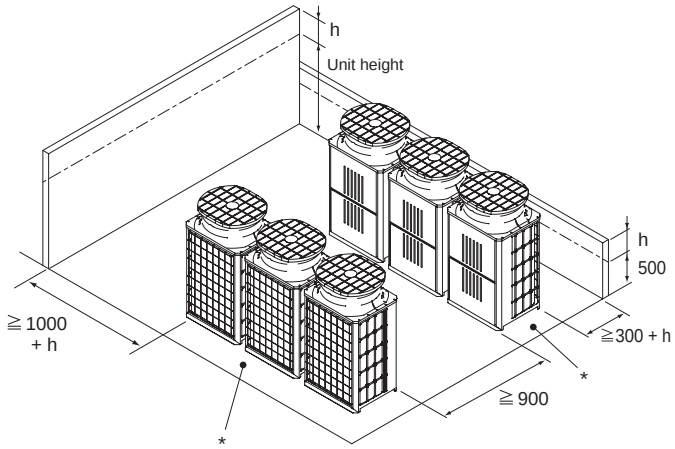

(Unit : mm)

GB

7. Lifting method

[Fig. 7.0.1]

① P200 ~ P300

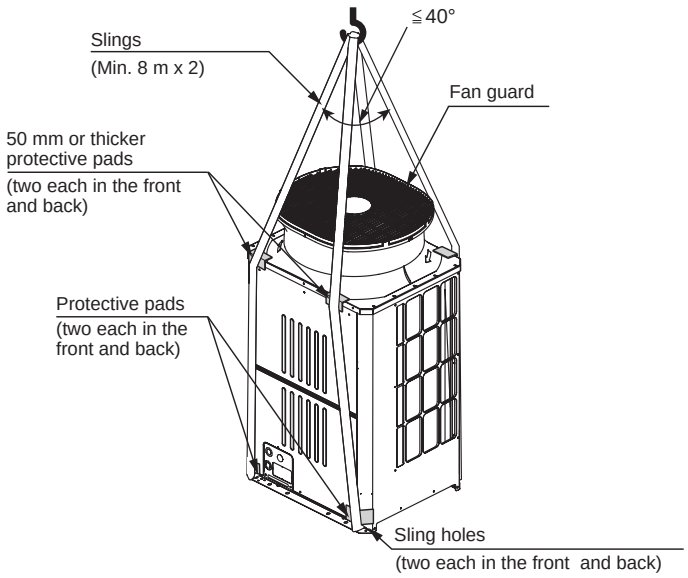

③ P500

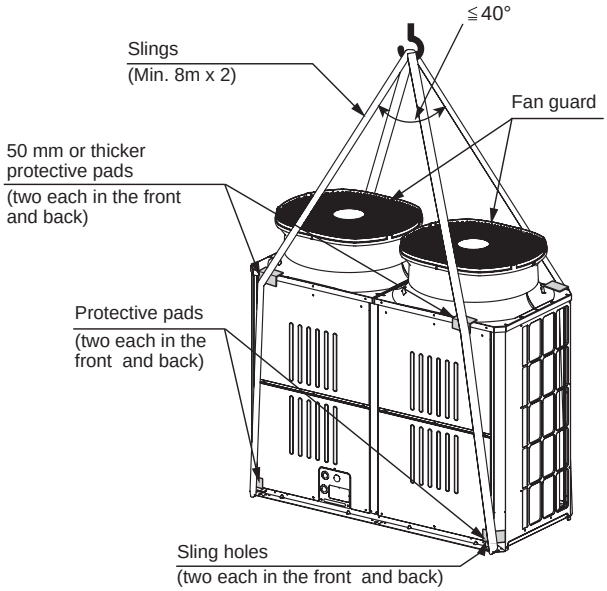

② P350 ~ P450

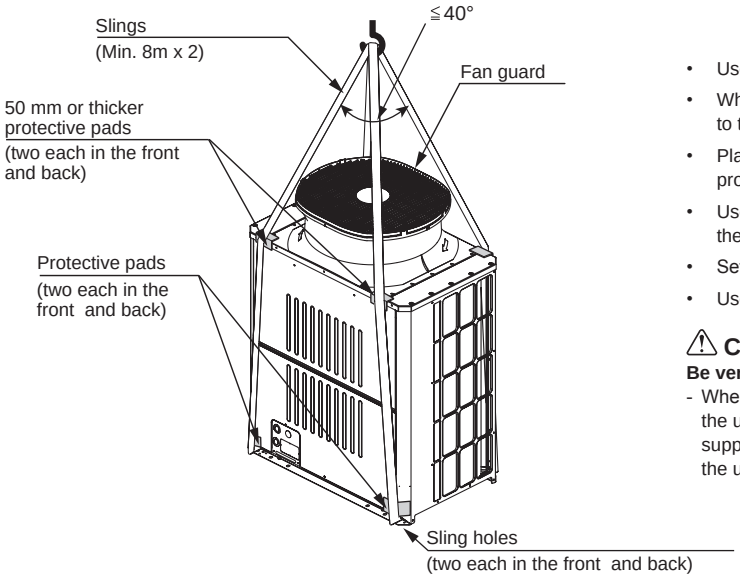

- Use suspension ropes that will withstand the weight of the unit.
- When moving the unit, use a **4-point suspension**, and avoid giving impacts to the unit (Do not use **2-point suspension**).
- Place protective pads on the unit where it comes in contact with the ropes to protect the unit from being scratched.
- Use a 50 mm or thicker cardboard or cloth as a protective pad on the top of the unit to prevent contact between the fan guard and slings.
- Set the angle of roping at 40˚ or less.
- Use 2 ropes that are each longer than 8 m.

⚠ Caution:

Be very careful when carrying/moving the product.

- When installing the outdoor unit, suspend the unit at the specified location of the unit base. Stabilize as necessary so that it does not move to the side and support it at 4 points. If the unit is installed or suspended with 3-point support, the unit may become unstable and fall.

GB

8. Installation of unit

8.1. Installation

[Fig. 8.1.1]
Without detachable leg

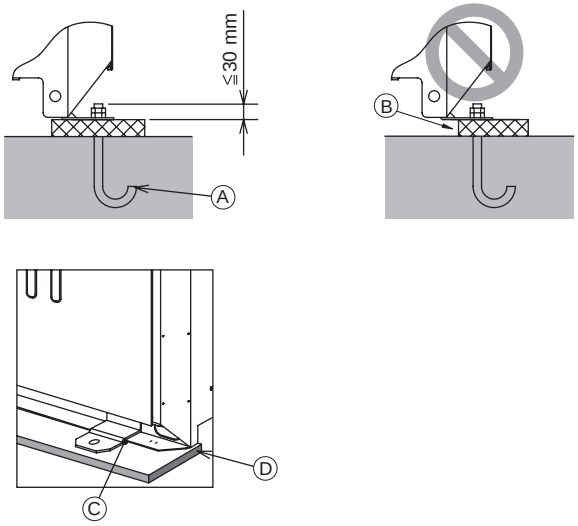

Ⓐ M10 anchor bolt procured at the site Ⓑ Corner is not seated.
Ⓒ Fixing bracket for the hole-in anchor bolt (3 locations to fix with screws)
Ⓓ Anti-vibration rubber
Install it so that the rubber covers the entire width of the unit leg.

- Fix unit tightly with bolts so that unit will not fall down due to earthquakes or strong winds.
- Use concrete base or an angle bracket as the foundation of unit.
- Vibration may be transmitted to the installation section and noise and vibration may be generated from the floor and walls, depending on the installation conditions. Therefore, provide ample vibrationproofing (cushion pads, cushion frame, etc.).
- Build the foundation in such way that the corner of the installation leg is securely supported as shown in the figure. (Fig. 8.1.1)
  When using a rubber isolating cushion, please ensure it is large enough to cover the entire width of each of the unit's legs. If the corners are not firmly seated, the installation feet may be bent.
- When using cushion pads, be sure that the full width of the unit is covered.
- The projecting length of the anchor bolt should be less than 30 mm.
- Post-installed anchor bolts (i.e., bolts not firmly cemented into the base) are not compatible with this product unless fixing brackets are first mounted on the four locations (six locations: P500).

[Fig. 8.1.2]

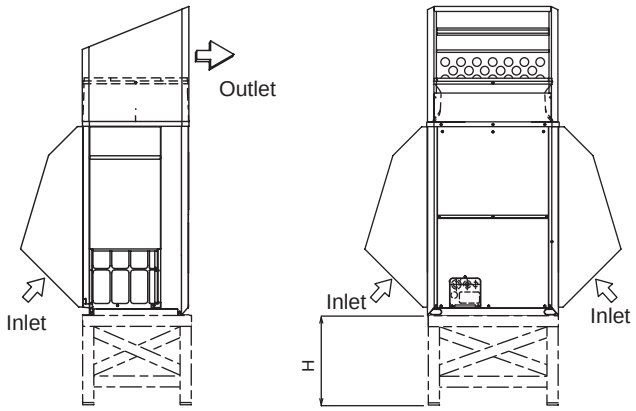

- In abnormally harsh environments such as cold and/or windy areas, sufficient countermeasures to guard against excessive wind and snow should be taken to ensure the unit's correct operation. When the unit is expected to operate in cooling mode in conditions under 10°C, in snowy areas, in environments subject to strong winds or rain, install air inlet and outlet ducting as shown in [Fig. 8.1.2].

Note:

1. Height of frame base for snow damage prevention (H) shall be twice as high as expected snowfall. Width of frame base shall not exceed that of the unit. The frame base shall be made of angle steel, etc., and designed so that snow and wind slip through the structure. (If frame base is too wide, snow will be accumulated on it.)
2. Install unit so that wind will not directly lash against openings of inlet and outlet ducts.
3. Build frame base at customer referring to this figure.
   Material : Galvanized steel plate 1.2T
   Painting : Overall painting with polyester powder
   Color : Munsell 5Y8/1 (same as that of unit)
4. When the unit is used in a cold region and the heating operation is continuously performed for a long time when the outside air temperature is below freezing, install a heater to the unit base or take other appropriate measures to prevent water from freezing on the base.

⚠ Warning:

- **Be sure to install unit in a place strong enough to withstand its weight. Any lack of strength may cause unit to fall down, resulting in a personal injury.**
- **Have installation work in order to protect against strong winds and earthquakes.**
  Any installation deficiency may cause unit to fall down, resulting in a personal injury.

When building the foundation, give full attention to the floor strength, drain water disposal <during operation, drain water flows out of the unit>, and piping and wiring routes.

Precautions when routing the pipes and wires below the unit
When routing the pipes and wires below the unit, be sure that the foundation and base work do not block the base through-holes. Also make sure the foundation is at least 100 mm high so that the piping can pass under the unit.

GB

9. Refrigerant piping installation

The pipe is connected via a terminal-branch type connection in which refrigerant piping from the outdoor unit is branched at the terminal and is connected to each of the indoor units.
The method of pipe connection is as follows: flare connection for the indoor units, gas pipes and liquid pipes for outdoor units, brazed connection. Note that the branched sections are brazed.

⚠ Warning:

Do not use refrigerant other than the type indicated in the manuals provided with the unit and on the nameplate.

- Doing so may cause the unit or pipes to burst, or result in explosion or fire during use, during repair, or at the time of disposal of the unit.
- It may also be in violation of applicable laws.
- MITSUBISHI ELECTRIC CORPORATION cannot be held responsible for malfunctions or accidents resulting from the use of the wrong type of refrigerant.

Always use extreme care to prevent the refrigerant gas from leaking while using fire or flame. If the refrigerant gas comes in to contact with a flame from any source, such as a gas stove, it breaks down and generates a poisonous gas which can cause gas poisoning. Never weld in an unventilated room. Always conduct an inspection for gas leakage after installation of the refrigerant piping has been completed.

GB

9.1. Caution

This unit uses refrigerant R410A. Follow the local regulations on materials and pipe thickness when selecting pipes. (Refer to the table on the right.)

① Use the following materials for refrigeration piping.
- Material: Use copper alloy seamless pipes made of phosphorus deoxidized copper. Ensure the inner and outer surfaces of the pipes are clean and free from hazardous sulfur, oxide, dusts, shaving particles, oils, and moisture (contamination).
- Size: Refer to item 9.2. for detailed information on refrigerant piping system.

② Always observe the restrictions on the refrigerant piping (such as rated length, height difference, and piping diameter) to prevent equipment failure or a decline in cooling performance.

③ Branching cannot be made after header branching (corresponding parts are marked with × in the diagram below).

④ **Do not install outdoor unit piping when it is raining.**

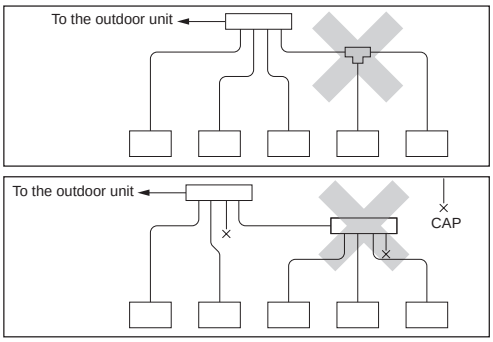

⑤ Commercially available piping often contains dust and other materials. Always blow it clean with a dry inert gas.

⑥ Use care to prevent dust, water or other contaminants from entering the piping during installation.

⑦ Reduce the number of bending portions as much as possible, and make bending radius as big as possible.

⑧ For indoor and outdoor branching, be sure to use the following twinning pipe sets in the table 1 (sold separately).

⑨ Use an adapter if a specified refrigerant pipe has a different diameter from that of a branching pipe.

⑩ **Braze only with non-oxide brazing material for piping. Failure to do so may damage the compressor. Be sure to perform the non-oxidation brazing with a nitrogen purge.**
Do not use any commercially available anti-oxidizing agent since it may cause pipe corrosion and degrading of the refrigerant oil.
Please contact Mitsubishi Electric for more details.
(Refer to item 10.2. for details of the piping connection and valve operation)

⑪ Always insulate the piping properly. Insufficient insulation will result in a decline in heating/cooling performance, water drops from condensation forming and other such problems. (Refer to item 10.4 for thermal insulation of refrigerant piping.)

⑫ When connecting the refrigerant piping, make sure the valve of the outdoor unit is completely closed (the factory setting). Do not operate it until the refrigerant piping for the outdoor and indoor units has been connected, a refrigerant leakage test has been performed, and the evacuation process has been completed.

⑬ **Never use refrigerant to perform an air purge.** Always evacuate using a vacuum pump.

⑭ **Be sure to charge the system using liquid refrigerant.**

⑮ Either a lack or an excess of refrigerant causes the unit to make an emergency stop. Charge the system with an appropriate amount of refrigerant. When servicing, always check the notes concerning pipe length and amount of additional refrigerant at both locations, the refrigerant volume calculation table on the back of the service panel and the additional refrigerant section on the labels for the combined number of indoor units. (Refer to item 9.2. for detailed information on refrigerant piping system.)

Copper pipe size and radial thickness for R410A CITY MULTI.

Size (mm)	Size (inch)	Radial thickness (mm)	Pipe type
ø6.35	ø1/4"	0.8	Type-O
ø9.52	ø3/8"	0.8	Type-O
ø12.7	ø1/2"	0.8	Type-O
ø15.88	ø5/8"	1.0	Type-O
*ø19.05	ø3/4"	1.2	Type-O
*ø19.05	ø3/4"	1.0	Type-1/2H or H
ø22.2	ø7/8"	1.0	Type-1/2H or H
ø25.4	ø1"	1.0	Type-1/2H or H
ø28.58	ø1-1/8"	1.0	Type-1/2H or H
ø31.75	ø1-1/4"	1.1	Type-1/2H or H
ø34.93	ø1-3/8"	1.2	Type-1/2H or H
ø41.28	ø1-5/8"	1.4	Type-1/2H or H

* Both pipe types can be used for pipe size ø19.05 for R410A air conditioner.

<Table 1>

Indoor twinning pipe set model						
Line branch				Header branch		
Lower steram unit model Less than 200 in total	Lower steram unit model More than 201 and less than 400 in total	Lower steram unit model More than 401 and less than 650 in total	Lower steram unit model More than 651 in total	4 branches	8 branches	10 branches
CMY-Y102SS-G2	CMY-Y102LS-G2	CMY-Y202S-G2	CMY-Y302S-G2	CMY-Y104C-G	CMY-Y108C-G	CMY-Y1010C-G

Outdoor Twinning Kit model					
PUCY-P-YSKD			PUCY-EP-YSKD		
Total outdoor model P550 ~ P650	Total outdoor model P700 ~ P1000	Total outdoor model P1050 ~ P1350	Total outdoor model EP400 ~ EP650	Total outdoor model EP700	Total outdoor model EP750 ~ P1100
CMY-Y100VBK3	CMY-Y200VBK2	CMY-Y300VBK3	CMY-Y100VBK3	CMY-Y200VBK2	CMY-Y300VBK3

⚠ Warning:

When installing and moving the unit, do not charge the system with any other refrigerant other than the refrigerant specified on the unit.

- Mixing of a different refrigerant, air, etc. may cause the refrigerant cycle to malfunction and may result in severe damage.

⚠ Caution:

- **Use a vacuum pump with a reverse flow check valve.**
  - If the vacuum pump does not have a reverse flow check valve, the vacuum pump oil may flow back into the refrigerant cycle and cause deterioration of the refrigerant oil.
- **Do not use the tools shown below used with conventional refrigerant. (Gauge manifold, charge hose, gas leak detector, check valve, refrigerant charge base, vacuum gauge, refrigerant recovery equipment)**
  - Mixing of conventional refrigerant and refrigerant oil may cause the refrigerant oil to deteriorate.
  - Mixing of water will cause the refrigerant oil to deteriorate.
  - R410A refrigerant does not contain any chlorine. Therefore, gas leak detectors for conventional refrigerants will not react to it.
- **Manage the tools used for R410A more carefully than normal.**
  - If dust, dirt, or water gets in the refrigerant cycle, the refrigerant oil will deteriorate.
- **Never use existing refrigerant piping.**
  - The large amount of chlorine in conventional refrigerant and refrigerant oil in the existing piping will cause the new refrigerant to deteriorate.
- **Store the piping to be used during installation indoors and keep both ends of the piping sealed until just before brazing.**
  - If dust, dirt, or water gets into the refrigerant cycle, the oil will deteriorate and the compressor may fail.
- **Do not use a charging cylinder.**
  - Using a charging cylinder may cause the refrigerant to deteriorate.
- **Do not use special detergents for washing piping.**

9.2. Refrigerant piping system

Connection Example

[Fig. 9.2.1]

[Outdoor model : P200 ~ P500YKD]

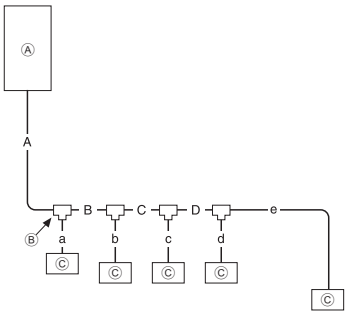

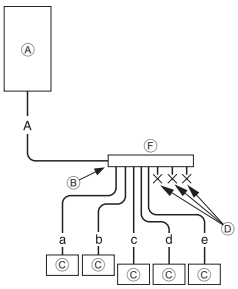

[Outdoor model : P550 ~ P1000YSKD, EP400 ~ EP700YSKD]

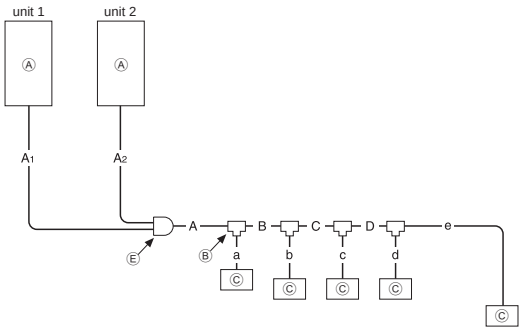

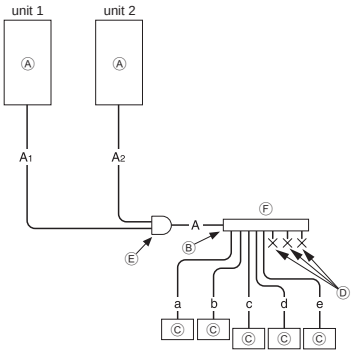

[Outdoor model : P1050 ~ P1500YSKD, EP750 ~ EP1100YSKD]

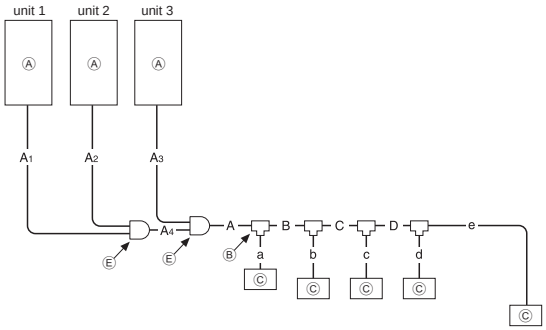

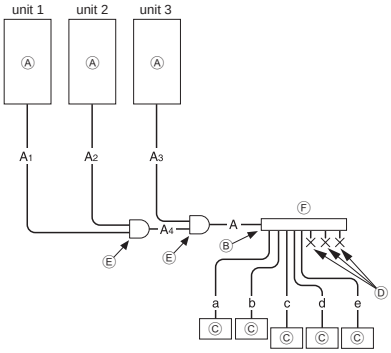

Ⓐ Outdoor unit
Ⓑ 1st branch
Ⓒ Indoor unit
Ⓓ Cap
Ⓔ Outdoor Twinning Kit
Ⓕ Header

* The total length of A_1 (A_2), A_3 and A_4 is less than 10 m.

GB

A

PUCY-P-Y(S)KD (Unit: mm)

Ⓐ Outdoor model	Unit Combination			A		A1*3		A2*3		A3*3		A4	
	Unit 1	Unit 2	Unit 3	Ⓑ Liquid pipe	Ⓒ Gas pipe	Ⓑ Liquid pipe	Ⓒ Gas pipe	Ⓑ Liquid pipe	Ⓒ Gas pipe	Ⓑ Liquid pipe	Ⓒ Gas pipe	Ⓑ Liquid pipe	Ⓒ Gas pipe
P200YKD	-	-	-	ø9.52	ø22.2	-	-	-	-	-	-	-	-
P250YKD	-	-	-	*1 ø9.52	ø22.2	-	-	-	-	-	-	-	-
P300YKD	-	-	-	*2 ø9.52	ø22.2	-	-	-	-	-	-	-	-
P350YKD	-	-	-	ø12.7	ø28.58	-	-	-	-	-	-	-	-
P400YKD	-	-	-	ø12.7	ø28.58	-	-	-	-	-	-	-	-
P450YKD	-	-	-	ø15.88	ø28.58	-	-	-	-	-	-	-	-
P500YKD	-	-	-	ø15.88	ø28.58	-	-	-	-	-	-	-	-
P550YSKD	P300	P250	-	ø15.88	ø28.58	ø12.7	ø22.2	ø9.52	ø22.2	-	-	-	-
P600YSKD	P350	P250	-	ø15.88	ø28.58	ø12.7	ø28.58	ø9.52	ø22.2	-	-	-	-
P650YSKD	P400	P250	-	ø15.88	ø28.58	ø15.88	ø28.58	ø9.52	ø22.2	-	-	-	-
P700YSKD	P450	P250	-	ø19.05	ø34.93	ø15.88	ø28.58	ø9.52	ø22.2	-	-	-	-
P750YSKD	P450	P300	-	ø19.05	ø34.93	ø15.88	ø28.58	ø12.7	ø22.2	-	-	-	-
P800YSKD	P400	P400	-	ø19.05	ø34.93	ø15.88	ø28.58	ø15.88	ø28.58	-	-	-	-
P850YSKD	P450	P400	-	ø19.05	ø41.28	ø15.88	ø28.58	ø15.88	ø28.58	-	-	-	-
P900YSKD	P450	P450	-	ø19.05	ø41.28	ø15.88	ø28.58	ø15.88	ø28.58	-	-	-	-
P950YSKD	P500	P450	-	ø19.05	ø41.28	ø15.88	ø28.58	ø15.88	ø28.58	-	-	-	-
P1000YSKD	P500	P500	-	ø19.05	ø41.28	ø15.88	ø28.58	ø15.88	ø28.58	-	-	-	-
P1050YSKD	P450	P300	P300	ø19.05	ø41.28	ø15.88	ø28.58	ø12.7	ø22.2	ø12.7	ø22.2	ø19.05	ø34.93
P1100YSKD	P450	P350	P300	ø19.05	ø41.28	ø15.88	ø28.58	ø12.7	ø28.58	ø12.7	ø22.2	ø19.05	ø34.93
P1150YSKD	P350	P400	P400	ø19.05	ø41.28	ø12.7	ø28.58	ø15.88	ø28.58	ø15.88	ø28.58	ø19.05	ø34.93
P1200YSKD	P400	P400	P400	ø19.05	ø41.28	ø15.88	ø28.58	ø15.88	ø28.58	ø15.88	ø28.58	ø19.05	ø34.93
P1250YSKD	P450	P400	P400	ø19.05	ø41.28	ø15.88	ø28.58	ø15.88	ø28.58	ø15.88	ø28.58	ø19.05	ø34.93
P1300YSKD	P450	P450	P400	ø19.05	ø41.28	ø15.88	ø28.58	ø15.88	ø28.58	ø15.88	ø28.58	ø19.05	ø34.93
P1350YSKD	P450	P450	P450	ø19.05	ø41.28	ø15.88	ø28.58	ø15.88	ø28.58	ø15.88	ø28.58	ø19.05	ø34.93
P1400YSKD	P500	P450	P450	ø19.05	ø41.28	ø15.88	ø28.58	ø15.88	ø28.58	ø15.88	ø28.58	ø19.05	ø34.93
P1450YSKD	P500	P500	P450	ø19.05	ø41.28	ø15.88	ø28.58	ø15.88	ø28.58	ø15.88	ø28.58	ø19.05	ø34.93
P1500YSKD	P500	P500	P500	ø19.05	ø41.28	ø15.88	ø28.58	ø15.88	ø28.58	ø15.88	ø28.58	ø19.05	ø34.93

PUCY-EP-YSKD (Unit: mm)

Ⓐ Outdoor model	Unit Combination			A		A1*3		A2*3		A3*3		A4	
	Unit 1	Unit 2	Unit 3	Ⓑ Liquid pipe	Ⓒ Gas pipe	Ⓑ Liquid pipe	Ⓒ Gas pipe	Ⓑ Liquid pipe	Ⓒ Gas pipe	Ⓑ Liquid pipe	Ⓒ Gas pipe	Ⓑ Liquid pipe	Ⓒ Gas pipe
EP400YSKD	P200	P200	-	ø12.7	ø28.58	ø9.52	ø22.2	ø9.52	ø22.2	-	-	-	-
EP450YSKD	P250	P200	-	ø15.88	ø28.58	ø9.52	ø22.2	ø9.52	ø22.2	-	-	-	-
EP500YSKD	P250	P250	-	ø15.88	ø28.58	ø9.52	ø22.2	ø9.52	ø22.2	-	-	-	-
EP650YSKD	P350	P300	-	ø15.88	ø28.58	ø12.7	ø28.58	ø12.7	ø22.2	-	-	-	-
EP700YSKD	P350	P350	-	ø19.05	ø34.93	ø12.7	ø28.58	ø12.7	ø28.58	-	-	-	-
EP750YSKD	P350	P200	P200	ø19.05	ø34.93	ø12.7	ø28.58	ø9.52	ø22.2	ø9.52	ø22.2	ø19.05	ø34.93
EP800YSKD	P350	P250	P200	ø19.05	ø34.93	ø12.7	ø28.58	ø9.52	ø22.2	ø9.52	ø22.2	ø19.05	ø34.93
EP850YSKD	P350	P250	P250	ø19.05	ø41.28	ø12.7	ø28.58	ø9.52	ø22.2	ø9.52	ø22.2	ø19.05	ø34.93
EP900YSKD	P350	P300	P250	ø19.05	ø41.28	ø12.7	ø28.58	ø12.7	ø22.2	ø9.52	ø22.2	ø19.05	ø34.93
EP950YSKD	P350	P300	P300	ø19.05	ø41.28	ø12.7	ø28.58	ø12.7	ø22.2	ø12.7	ø22.2	ø19.05	ø34.93
EP1000YSKD	P350	P350	P300	ø19.05	ø41.28	ø12.7	ø28.58	ø12.7	ø28.58	ø12.7	ø22.2	ø19.05	ø34.93
EP1050YSKD	P350	P350	P350	ø19.05	ø41.28	ø12.7	ø28.58	ø12.7	ø28.58	ø12.7	ø28.58	ø19.05	ø34.93
EP1100YSKD	P400	P350	P350	ø19.05	ø41.28	ø15.88	ø28.58	ø12.7	ø28.58	ø12.7	ø28.58	ø19.05	ø34.93

*1 Use the ø12.7 pipe if the piping length from the outdoor unit to the farthest indoor unit is 90 m or longer.
*2 Use the ø12.7 pipe if the piping length from the outdoor unit to the farthest indoor unit is 40 m or longer.
*3 The pipe sizes listed in columns A1 to A3 in this table correspond to the sizes for the models listed in the unit 1, 2, and 3 columns. When the order of the models for unit 1, 2, and 3 change, make sure to use the appropriate pipe size.
*4 Ⓑ 90 m is available. When the piping length exceeds 40 m, use one size larger liquid pipe starting with the section of piping where 40 m is exceeded and all piping after that point.
*5 Ⓒ When the height difference between the indoor units is 15 m or greater (≤ 30 m), use the one size larger liquid pipe for the indoor unit (lower side).

B,C,D (Unit: mm)

Total capacity of indoor units	Liquid pipe	Gas pipe
~ 140	ø9.52	ø15.88
141 ~ 200	ø9.52	ø19.05
201 ~ 300	ø9.52	ø22.2
301 ~ 400	ø12.7	ø28.58
401 ~ 650	ø15.88	ø28.58
651 ~ 800	ø19.05	ø34.93
801 ~	ø19.05	ø41.28

a,b,c,d,e (Unit: mm)

Model number	Liquid pipe	Gas pipe
20, 25, 32, 40, 50	ø6.35	ø12.7
63, 71, 80, 100, 125, 140	ø9.52	ø15.88
200	ø9.52	ø19.05
250	ø9.52	ø22.2

Downstream unit model total	Joint
~ 200	CMY-Y102SS-G2
201 ~ 400	CMY-Y102LS-G2
401 ~ 650	CMY-Y202S-G2
651 ~	CMY-Y302S-G2

4-Branching header (Downstream unit model total ≤ 200)	8-Branching header (Downstream unit model total ≤ 400)	10-Branching header (Downstream unit model total ≤ 650)
CMY-Y104-G	CMY-Y108-G	CMY-Y1010-G

Outdoor model	Outdoor twinning kit
P550 ~ P650	CMY-Y100VBK3
P700 ~ P1000	CMY-Y200VBK2
P1050 ~ P1500	CMY-Y300VBK3

Outdoor model	Outdoor twinning kit
EP400 ~ EP650	CMY-Y100VBK3
EP700	CMY-Y200VBK2
EP750 ~ EP1100	CMY-Y300VBK3

• When connecting a unit with a capacity index of between P200 and P300, install a branch joint (CMY-Y102LS-G2) at the first branch.
• When connecting a unit with a capacity index of between P350 and (E)P400, install a branch joint (CMY-Y102LS-G2 or CMY-Y202S-G2) at the first branch.
• When connecting a unit with a capacity index of between (E)P450 and (E)P650, install a branch joint (CMY-Y202S-G2) at the first branch.
• When connecting a unit with a capacity index of (E)P700 and above, install a branch joint (CMY-Y302S-G2) at the first branch.
The total indexes of all units in the downstream of one of the branches must be 650 or less.
If the total indexes of all units in the downstream of both branches exceed 650, install two branch joints sequentially.

Precautions for outdoor unit combinations

Refer to [Fig. 9.2.2] for the positioning of twinning pipes.

[Fig. 9.2.2]

<A> Install the piping so that oil will not accumulate in the stopped outdoor unit.

1.

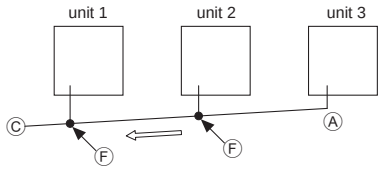

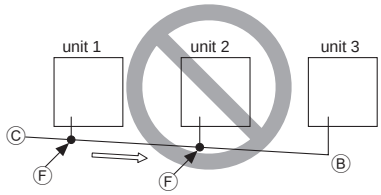

The NG example shows that oil accumulates because the units are installed on a reverse gradient while unit 1 is in operation, and unit 3 is stopped.

2.

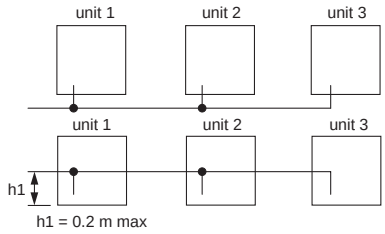

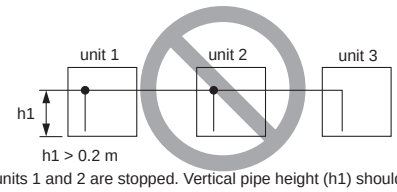

The NG example shows that oil accumulates into units 1 and 2 while unit 3 is in operation, and units 1 and 2 are stopped. Vertical pipe height (h1) should be 0.2 m or below.

3.

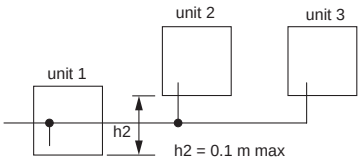

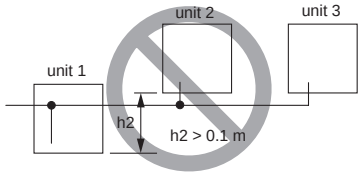

The NG example shows that oil accumulates into unit 1 while unit 3 is in operation, and unit 1 is stopped. Difference between unit and unit in height (h2) should be 0.1 m or below.

4.

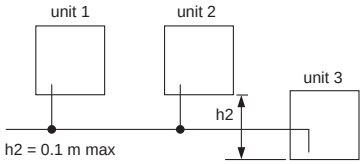

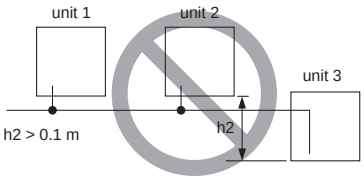

The NG example shows that oil accumulates into unit 3 while unit 1 is in operation, and unit 3 is stopped. Difference between unit and unit in height (h2) should be 0.1 m or below.

<B> When the piping on the outdoor unit side (from the twinning pipe) exceeds 2 m, ensure a trap (**gas pipe only**) within 2 m.
Make sure the height of the trap is 200 mm or more.
If there is no trap, oil can accumulate inside the pipe, causing a shortage of oil and may damage the compressor.

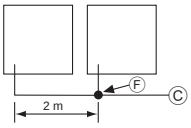

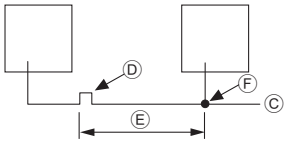

⚠ Caution:

- **Do not install traps other than the ones between outdoor units described on a separate sheet to prevent oil backflow and compressor start-up failure.**
- **Do not install solenoid valves to prevent oil backflow and compressor start-up failure.**
- **Do not install a sight glass because it may show improper refrigerant flow.**
  If a sight glass is installed, inexperienced technicians that use the glass may overcharge the refrigerant.

GB

<C> Slope of twinning pipes

Make sure the slope of the twinning pipes are at an angle within ±15° to the ground.

If the slope exceeds the specified angle, the unit may be damaged.

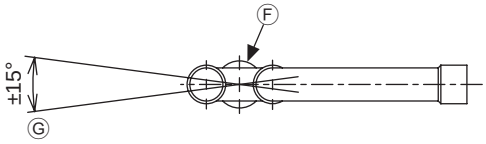

<D> Pipe connection example

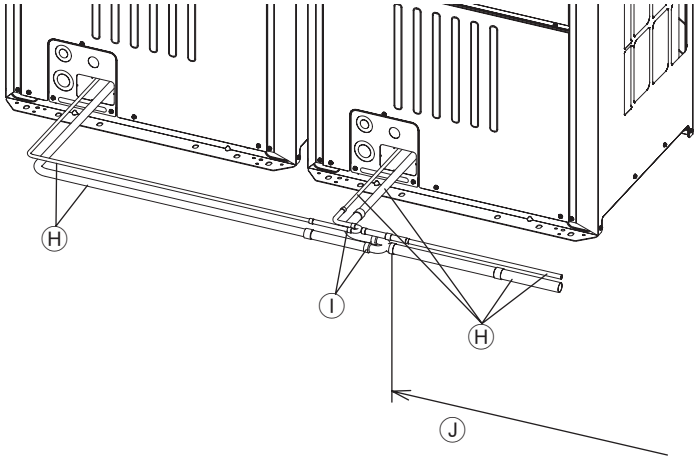

Ⓐ Downward slope Ⓑ Upward slope Ⓒ Indoor unit Ⓓ Trap (gas pipe only) Ⓔ Within 2 m

Ⓕ Twinning pipe Ⓖ Slope of the twinning pipes are at an angle within ±15° to the ground Ⓗ Pipes on site

Ⓘ Twinning Kit Ⓙ Straight run of pipe that is 500 mm or more

10. Additional refrigerant charge

At the time of shipping, the outdoor unit is charged with refrigerant.
This charge does not include the amount needed for extended piping and additional charging of each refrigerant line will be required on site. In order that future servicing may be properly provided, always keep a record of the size and length of each refrigerant line and the amount of additional charge by writing it in the space provided on the outdoor unit.

10.1. Calculation of additional refrigerant charge

- Calculate the amount of additional charge based on the length of the piping extension and the size of the refrigerant line.
- Use the table below as a guide for calculating the amount of additional charging and then charge the system accordingly.
- If the calculation results in a fraction of less than 0.1 kg, round up to the next 0.1 kg. For example, if the result of the calculation was 12.38 kg, round the result up to 12.4 kg.

<Additional charge>

Additional refrigerant charge (kg) [oz]	=	Total length of liquid pipe sized ø19.05 mm (m) × 0.29 (kg/m)	+	Total length of liquid pipe sized ø15.88 mm (m) × 0.2 (kg/m)	+	Total length of liquid pipe sized ø12.7 mm (m) × 0.12 (kg/m)

+	Total length of liquid pipe sized ø9.52 mm (m) × 0.06 (kg/m)	+	Total length of liquid pipe sized ø6.35 mm (m) × 0.024 (kg/m)

+	Additional charge		+ α
	Outdoor unit model	Charged amount	
	P200	-	
	P250	-	
	P300	-	
	P350	-	
	P400	-	
	P450	-	
	P500	6.0 kg	

<Example>

Indoor

1: 125	A : ø12.7 mm	40 m	a : ø9.52 mm	10 m	At the conditions below:
2: 100	B : ø9.52 mm	10 m	b : ø9.52 mm	5 m	
3: 40	C : ø9.52 mm	15 m	c : ø6.35 mm	10 m	
4: 32	D : ø9.52 mm	10 m	d : ø6.35 mm	10 m	
5: 64			e : ø9.52 mm	10 m	

The total length of each liquid line is as follows:

ø12.7 mm: A = 40 m = 40 m

ø9.52 mm: B + C + D + a + b + e

= 10 m + 15 m + 10 m + 10 m + 5 m + 10 m = 60 m

ø6.35 mm: c + d = 10 m + 10 m = 20 m

Therefore,

<Calculation example>

Additional refrigerant charge

= 40 m × 0.12 kg/m + 60 m × 0.06 kg/m + 20 m × 0.024 kg/m + 3.5 kg

= 12.4 kg

* When connecting one or more PEFY-P20VMA3-E units, add 0.54 kg of refrigerant for each of these units.
* When connecting one or more PEFY-P25/32/40VMA3-E units, add 0.74 kg of refrigerant for each of these units.
* When connecting one or more PEFY-P50/63/71/80/100/125VMA3-E units, add 1.16 kg of refrigerant for each of these units.
* When connecting one or more PEFY-P50/63/71/80/100VMHS2-E units, add 2.70 kg of refrigerant for each of these units.

Value of α

Total capacity of connecting indoor units	α
Models ~ 80	2.0 kg
Models 81 ~ 160	2.5 kg
Models 161 ~ 330	3.0 kg
Models 331 ~ 390	3.5 kg
Models 391 ~ 480	4.5 kg
Models 481 ~ 630	5.0 kg
Models 631 ~ 710	6.0 kg
Models 711 ~ 800	8.0 kg
Models 801 ~ 890	9.0 kg
Models 891 ~1070	10.0 kg
Models 1071 ~1250	12.0 kg
Models 1251 ~	14.0 kg

<Amount of factory charged refrigerant>

Outdoor unit model	Charged amount
P200	5.5 kg
P250	6.5 kg
P300	6.5 kg
P350	11.5 kg
P400	11.5 kg
P450	11.5 kg
P500	11.8 kg

GB

10.2. Precautions concerning piping connection and valve operation

- Conduct piping connection and valve operation accurately and carefully.
- **Removing the pinched connecting pipe**
  When shipped, a pinched connecting pipe is attached to the on-site liquid and gas valves to prevent gas leakage.
  Take the following steps ① through ④ to remove the pinched connecting pipe before connecting refrigerant pipes to the outdoor unit.
  ① Check that the refrigerant service valve is fully closed (turned clockwise all the way).
  ② Connect a charging hose to the service port on the liquid/gas refrigerant service valve, and extract the gas in the pipe section between the refrigerant service valve and the pinched connecting pipe.
  ③ After vacuuming gas from the pinched connecting pipe, sever the pinched connecting pipe at the location shown in [Fig.10.2.1] and drain the refrigerant.
  ④ After completing ② and ③ heat the brazed section to remove the pinched connecting pipe.

[Fig. 10.2.1]

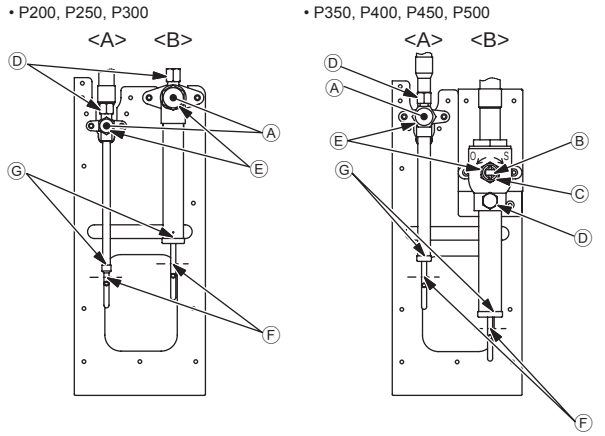

<A> Refrigerant service valve (liquid side/brazed type)
<B> Refrigerant service valve (gas side/brazed type)
Ⓐ Shaft
Fully closed at the factory, when connecting the piping, and when vacuuming. Open fully after these operations are completed.
<When opening>
• Turn the shaft counterclockwise with a hexagonal wrench.
• Turn around the shaft until it stops.
<When closing>
• Turn the shaft clockwise with a hexagonal wrench.
• Turn around the shaft until it stops.
Ⓑ Shaft
Fully closed at the factory, when connecting the piping, and when vacuuming.
Open fully after these operations are completed.
<When opening>
• Turn the shaft counterclockwise.
• Turn around the shaft until it stops.
<When closing>
• Turn the shaft clockwise.
• Turn around the shaft until it stops.
Ⓒ Stopper pin
Prevents the shaft from turning 90˚ or more.
Ⓓ Service port
Available for gas venting of the pinched connecting pipe, or vacuuming in the refrigerant pipes on the site.
Ⓔ Cap
Remove the cap before operating the shaft. Be sure to return it to the original position after completing the operation.
Ⓕ Pinched connecting pipe severing portion
Ⓖ Pinched connecting pipe brazing portion

⚠ Warning:

- **The sections between the refrigerant service valves and the pinched connecting pipes are filled with gas and refrigerant oil. Extract the gas and refrigerant oil in the above-mentioned pipe section before heating the brazed section to remove the refrigerant service valve pinched connecting pipe.**
  - If the brazed section is heated without first extracting the gas and refrigerant oil, the pipe may burst or the pinched connecting pipe may blow off and ignite the refrigerant oil, causing serious injury.

⚠ Caution:

- **Place a wet towel on the refrigerant service valve before heating the brazed section to keep the temperature of the valve from exceeding 120 ˚C.**
- **Direct the flame away from the wiring and metal sheets inside the unit to prevent heat damage.**

⚠ Caution:

- **Do not vent R410A into the atmosphere.**

- **Refrigerant pipe connection**
  This product needs connecting pipes for front piping and bottom post-piping. (Refer to [Fig.10.2.2])
  Check the liquid/gas piping dimensions before connecting the refrigerant pipe.
  Refer to the table below for piping dimensions.
  Make sure that the refrigerant pipe is not touching other refrigerants pipes, unit panels, or base plates.
  Be sure to use non-oxidative brazing when connecting pipes.
  Be careful not to burn the wiring and plate when brazing.

<Refrigerant piping connection examples>

[Fig.10.2.2]

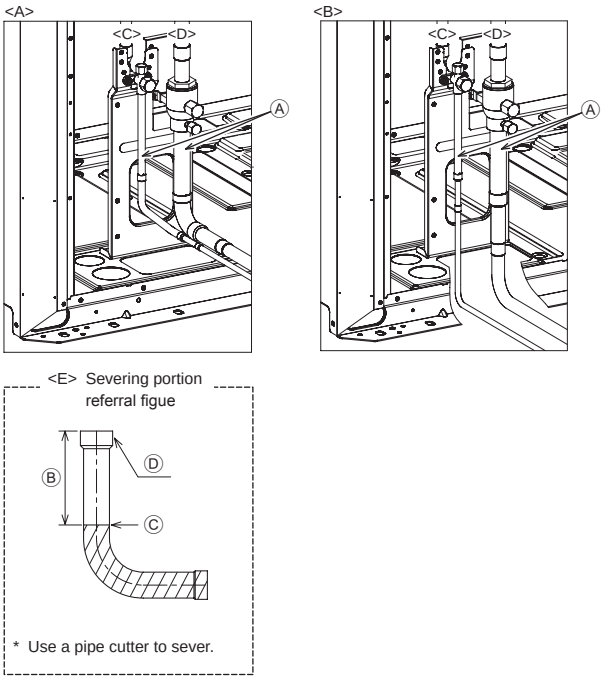

<A> Front pipe routing
<B> Bottom pipe routing
<C> Liquid side
<D> Gas side
<E> Severing portion referral figue
Ⓐ Refrigerant service valve piping
Ⓑ 75mm (reference measurement)
Ⓒ Severing portion
Ⓓ Refrigerant service valve side

(Unit: mm)

Model	Diameter			
	Refrigerant pipe		Service valve	
	Liquid	Gas	Liquid	Gas
P200	ø9.52 Brazed	ø22.2 Brazed	ø9.52	ø19.05
P250	ø9.52 Brazed (ø12.7 Brazed) *1			ø25.4
P300	ø9.52 Brazed (ø12.7 Brazed) *2, *3		ø12.7	
P350	ø12.7 Brazed	ø28.58 Brazed	ø15.88	ø28.58
P400	ø12.7 Brazed (ø15.88 Brazed) *3			
P450	ø15.88 Brazed			
P500				

*1 Furthest piping length (OU from IU) ≧ 90m
*2 Furthest piping length (OU from IU) ≧ 40m
*3 Indicates dimensions and connection specifications in the case the unit is used in combination with other outdoor units.

GB

<Front piping and bottom post-pipting>

No.	①	③	⑤	⑦	⑨
Shape	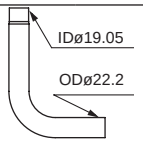	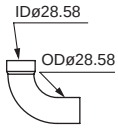	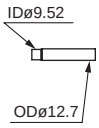	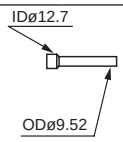	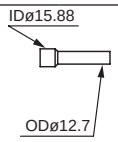
No.	②	④	⑥	⑧	
Shape	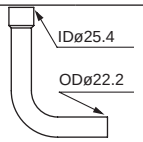	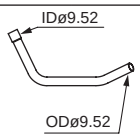	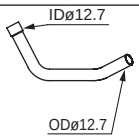	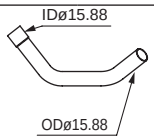	

	①	②	③	④	⑤	⑥	⑦	⑧	⑨
P200	1	-	-	1	-	-	-	-	-
P250	-	1	-	1	1	-	-	-	-
P300	-	1	-	-	-	1	1	-	-
P350	-	-	1	-	-	-	-	1	1
P400	-	-	1	-	-	-	-	1	1
P450	-	-	1	-	-	-	-	1	-
P500	-	-	1	-	-	-	-	1	-

GB

- Front pipe routing

Liquid side <C>	P200, P250	Use the included connecting pipe ④ to connect.
	P250*1	Use the included connecting pipes ④ and ⑤ to connect.
	P300	Use the included connecting pipes ⑥ and ⑦ to connect.
	P300*2	Use the included connecting pipe ⑥ to connect.
	P350, P400	Use the included connecting pipes ⑧ and ⑨ to connect.
	P450, P500	Use the included connecting pipe ⑧ to connect.
Gas side <D>	P200	Use the included connecting pipe ① to connect.
	P250, P300	Use the included connecting pipe ② to connect.
	P350, P400, P450, P500	Use the included connecting elbow ③ to connect.

- Bottom pipe routing

Liquid side <C>	P200, P250	Expand the liquid side on-site piping (ID ø9.52mm) and connect to the refrigerant service valve piping.
	P250*1	Use the included connecting pipe ⑤ to connect.
	P300	Use the included connecting pipe ⑦ to connect.
	P300*2	Expand the liquid side on-site piping (ID ø12.7mm) and connect to the refrigerant service valve piping.
	P350, P400	Use the included connecting pipe ⑨ to connect.
	P450, P500	Expand the liquid side on-site piping (ID ø15.88mm) and connect to the refrigerant service valve piping.
Gas side <D>	P200	Sever the included connecting pipe ① as shown in the figure with a pipe cutter to use. Expand the gas side on-site piping (ID ø22.2mm).
	P250, P300	Sever the included connecting pipe ② as shown in the figure with a pipe cutter to use. Expand the gas side on-site piping (ID ø22.2mm).
	P350, P400, P450, P500	Expand the gas side on-site piping (ID ø28.58mm) and connect to the refrigerant service valve piping.

*1 Over 90m
*2 Over 40m or In the case the unit is used in combination with other outdoor units.

Satisfy the minimum insertion depth in the table below when expanding on-site piping

Pipe diameter (mm)	Minimum insertion depth (mm)
5 or more, less than 8	6
8 or more, less than 12	7
12 or more, less than 16	8
16 or more, less than 25	10
25 or more, less than 35	12
35 or more, less than 45	14

- After evacuation and refrigerant charging, ensure that the handle is fully open. If operating with the valve closed, abnormal pressure will be imparted to the high- or low-pressure side of the refrigerant circuit, giving damage to the compressor, four-way valve, etc.
- Determine the amount of additional refrigerant charge by using the formula, and charge refrigerant additionally through the service port after completing evacuation.
- After completing work, tighten the service port and cap securely so as not to generate any gas leakage. (Refer to the table on the below for appropriate tightening torque.)

Appropriate tightening torque:

Outer diameter of copper pipe (mm)	Cap (N·m)	Shaft (N·m)	Size of hexagonal wrench (mm)	Service port (N·m)
ø9.52	22	6	4	12
ø12.7	27	10	4	
ø15.88	32	12	6	
ø19.05	50	30	6	
ø25.4	50	30	10	
ø28.58	22	-	-	16

⚠ Caution:

- **Keep the valve closed until refrigerant charging to the pipes to be added on site has been completed. Opening the valve before charging the refrigerant may cause damage to the unit.**
- **Do not use a leak detection additive.**

[Fig. 10.2.3]

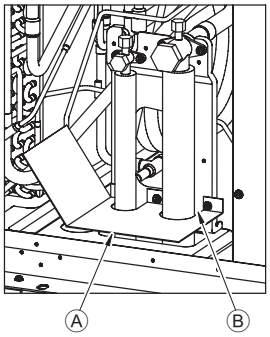

Ⓐ Example of closure materials (field-supplied)
Ⓑ Fill the gap at the site

Make sure to seal-off the space around areas where the wires and refrigerant pipes enter the unit to ensure that small animals, rainwater, or snow cannot enter the unit through such openings and cause damage to the unit.

⚠ Caution:

- **Make sure to seal-off the openings for the pipe and wire retrieval.**
- **Small animals, rainwater, or snow entering through the openings may cause damage to the device.**

10.3. Airtight test, evacuation, and refrigerant charging

① **Airtight test**

Perform with the valve of the outdoor unit closed, and pressurize the connection piping and the indoor unit from the service port provided on the valve of the outdoor unit. (Always pressurize from both the liquid pipe and the gas pipe service ports.)

[Fig. 10.3.1]

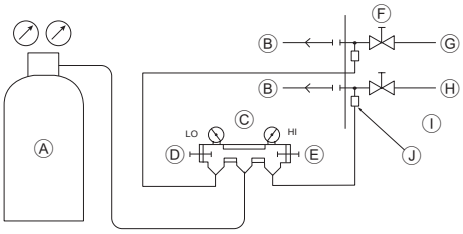

Ⓐ Nitrogen gas
Ⓑ To indoor unit
Ⓒ System analyzer
Ⓓ Lo knob
Ⓔ Hi knob
Ⓕ Valve
Ⓖ Liquid pipe
Ⓗ Gas pipe
Ⓘ Outdoor unit
Ⓙ Service port

Observe the following restrictions when conducting an air tightness test to prevent negative effects on the refrigerating machine oil. Also, with nonazeotropic refrigerant (R410A), gas leakage causes the composition to change and affects performance. Therefore, perform the airtightness test cautiously.

Airtight test procedure	Restriction
(1) After pressurizing to the design pressure (4.15 MPa) using nitrogen gas, allow it to stand for about one day. If the pressure does not drop, airtightness is good. However, if the pressure drops, since the leaking point is unknown, the following bubble test may also be performed. (2) After the pressurization described above, spray the flare connection parts, brazed parts, and other parts that may leak with a bubbling agent (Gupoflex, etc.) and visually check for bubbles. (3) After the airtight test, wipe off the bubbling agent.	• If a flammable gas or air (oxygen) is used as the pressurization gas, it may catch fire or explode.

⚠ Caution:

Only use refrigerant R410A.

- The use of other refrigerant such as R22 or R407C, which contains chlorine, will deteriorate the refrigerating machine oil or cause the compressor to malfunction.

② **Evacuation**

Evacuate with the valve of the outdoor unit closed and evacuate both the connection piping and the indoor unit from the service port provided on the valve of the outdoor unit using a vacuum pump. (Always evacuate from the service port of both liquid pipe and gas pipe.) After the vacuum reaches 650 Pa [abs] [0.0943 psi/5 Torr], continue evacuation for at least one hour or more. Then, stop the vacuum pump and leave it for 1 hour. Ensure the degree of vacuum has not increased. **(If the degree of vacuum increase is larger than 130 Pa, water might have entered. Apply pressure to dry nitrogen gas up to 0.05 MPa and vacuum again. Repeat the evacuation process three or more times until the vacuum pressure is lost by 130 Pa or below.)** Finally, seal in with the liquid refrigerant through the liquid pipe, and adjust the gas piping to obtain an appropriate amount of the refrigerant during operation.

* Never perform air purging using refrigerant.

[Fig. 10.3.2]

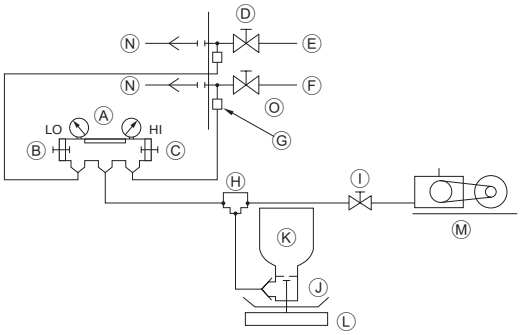

Ⓐ System analyzer
Ⓑ Lo knob
Ⓒ Hi knob
Ⓓ Valve
Ⓔ Liquid pipe
Ⓕ Gas pipe
Ⓖ Service port
Ⓗ Three-way joint
Ⓘ Valve
Ⓙ Valve
Ⓚ R410A cylinder
Ⓛ Scale
Ⓜ Vacuum pump
Ⓝ To indoor unit
Ⓞ Outdoor unit

Note:

- For evacuation, the following procedures can be referred.

- **Always add an appropriate amount of refrigerant. Also always charge the system with liquid refrigerant.**
- **Use a gauge manifold, charging hose, and other parts for the refrigerant indicated on the unit.**
- **Use a graviometer. (One that can measure down to 0.1 kg.)**
- **Use a vacuum pump with a reverse flow check valve.**
  (Recommended vacuum gauge: ROBINAIR 14830A Thermistor Vacuum Gauge or Micron Gauge)
  Do not use a manifold gauge to measure vacuum pressure.
  Also use a vacuum gauge that reaches 65 Pa [abs] or below after operating for five minutes.

<Triple Evacuation>

- **Evacuate the system to 4,000 microns from both service valves. System manifold gauges must not be used to measure vacuum. A micron gauge must be used at all times.**
  - Break the vacuum with Nitrogen (N2) into the discharge service valve to 0 PSIG.

GB

- **Evacuate the system to 1,500 microns from the suction service valve.**
  - Break the vacuum with Nitrogen (N2) into the discharge service valve to 0 PSIG.
- **Evacuate the system to 500 microns. System must hold the vacuum at 500 microns for a minimum of 1 hour.**
- **Conduct a rise test for a minimum of 30 minutes.**

③ **Refrigerant Charging**

Do not use refrigerant other than the type indicated in the manuals provided with the unit and on the nameplate.
- Doing so may cause the unit or pipes to burst, or result in explosion or fire during use, during repair, or at the time of disposal of the unit.
- It may also be in violation of applicable laws.
- MITSUBISHI ELECTRIC CORPORATION cannot be held responsible for malfunctions or accidents resulting from the use of the wrong type of refrigerant.

Since the refrigerant used with the unit is nonazerotropic, it must be charged in the liquid state. Consequently, when charging the unit with refrigerant from a cylinder, if the cylinder does not have a siphon pipe, charge the liquid refrigerant by turning the cylinder upside-down as shown in Fig.10.3.3. If the cylinder has a siphon pipe like that shown on the right of Fig.10.3.3, the liquid refrigerant can be charged with the cylinder standing upright. Therefore, give careful attention to the cylinder specifications. If the unit should be charged with gas refrigerant, replace all the refrigerant with new refrigerant. Do not use the refrigerant remaining in the cylinder.

[Fig. 10.3.3]

<If the cylinder does not have a siphon pipe, charge with the refrigerant cylinder upside-down.>

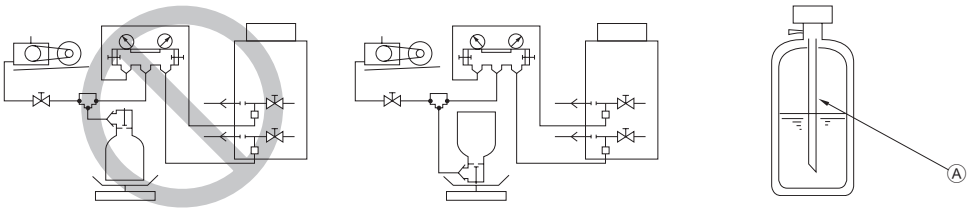

Ⓐ Siphon pipe

GB

10.4. Thermal insulation of refrigerant piping

Be sure to add insulation work to refrigerant piping by covering liquid pipe and gas pipe separately with enough thickness heat-resistant polyethylene, so that no gap is observed in the joint between indoor unit and insulating material, and insulating materials themselves. When insulation work is insufficient, there is a possibility of condensation drip, etc. Pay special attention to insulation work in the ceiling plenum.

[Fig. 10.4.1]

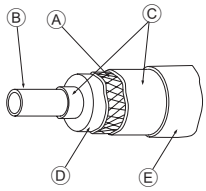

Ⓐ Steel wire
Ⓑ Piping
Ⓒ Oily mastic asphalt or asphalt
Ⓓ Heat insulation material A
Ⓔ Outer covering B

Heat insulation material A	Glass fiber + Steel wire	
	Adhesive + Heat - resistant polyethylene foam + Adhesive tape	
Outer covering B	Indoor	Vinyl tape
	Floor exposed	Water-proof hemp cloth + Bronze asphalt
	Outdoor	Water-proof hemp cloth + Zinc plate + Oily paint

Note:
- **When using polyethylene cover as covering material, asphalt roofing shall not be required.**
- **No heat insulation must be provided for electric wires.**

[Fig. 10.4.2]

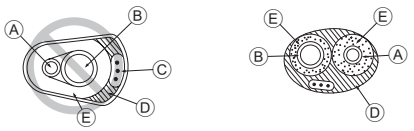

Ⓐ Liquid pipe
Ⓑ Gas pipe
Ⓒ Electric wire
Ⓓ Finishing tape
Ⓔ Insulator

[Fig. 10.4.3]

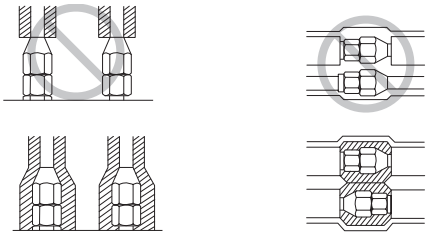

Penetrations

[Fig. 10.4.4]

(Unit: mm)

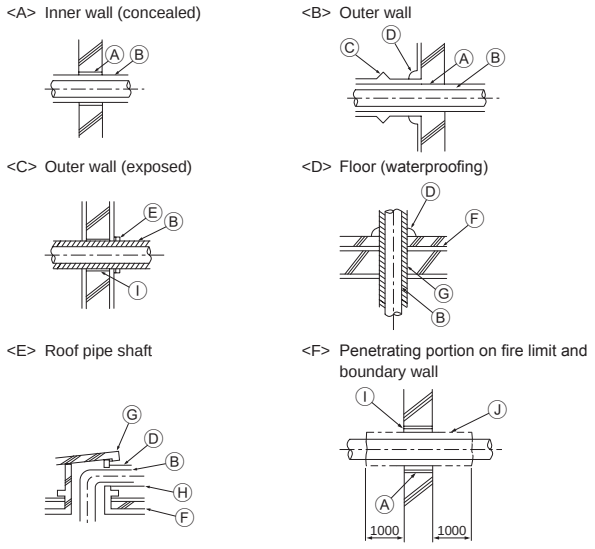

Ⓐ Sleeve
Ⓑ Heat insulating material
Ⓒ Lagging
Ⓓ Caulking material
Ⓔ Band
Ⓕ Waterproofing layer
Ⓖ Sleeve with edge
Ⓗ Lagging material
Ⓘ Mortar or other incombustible caulking
Ⓙ Incombustible heat insulation material

When filling a gap with mortar, cover the penetration part with steel plate so that the insulation material will not be caved in. For this part, use incombustible materials for both insulation and covering. (Vinyl covering should not be used.)

- Insulation materials for the pipes to be added on site must meet the following specifications:

	Pipe size	
	ø6.35 to 25.4 mm	ø28.58 to 41.28 mm
Thickness	10 mm min.	15 mm min.
Temperature Resistance	100°C min.	

* Installation of pipes in a high-temperature high-humidity environment, such as the top floor of a building, may require the use of insulation materials thicker than the ones specified in the chart above.

* When certain specifications presented by the client must be met, ensure that they also meet the specifications on the chart above.

11. Wiring (For details, refer to the installation manual of each indoor/outdoor unit and controller.)

11.1. Caution

① Follow ordinance of your governmental organization for technical standard related to electrical equipment, wiring regulations and guidance of each electric power company.

② Wiring for control (hereinafter referred to as transmission line) shall be (5 cm or more) apart from power source wiring so that it is not influenced by electric noise from power source wiring. (Do not insert transmission line and power source wire in the same conduit.)

③ Be sure to provide designated grounding work to the outdoor unit.

④ Give some allowance to wiring for the electrical part box on the indoor and outdoor units, because these boxes are sometimes removed at the time of service work.

⑤ Never connect the main power source to terminal block of transmission line. If connected, electrical parts will be damaged.

⑥ Use 2-core shield cable for the transmission line. If transmission lines of different systems are wired with the same multiplecore cable, the resultant poor transmitting and receiving will cause erroneous operations.

⑦ Only the transmission line specified should be connected to the terminal block for outdoor unit transmission.
Erroneous connection does not allow the system to operate.

⑧ When connecting a System Controller to outdoor units or performing a group operation of indoor units that are connected to different outdoor units, a transmission line for centralized control is required. When using a transmission line for centralized control, connect the transmission line (non-polar 2 core wire) to all TB7 terminals between all outdoor units.

⑨ Group is set by operating the remote controller.

- **Control box houses high-voltage parts.**
- **When opening or closing the front panel of the control box, do not let it come into contact with any of the internal components.**
- **Before inspecting the inside of the control box, turn off the power, keep the unit off for at least 10 minutes, and confirm that the capacitor voltage (inverter main circuit) has dropped to 20 VDC or less.**
  (It takes about 10 minutes to discharge electricity after the power supply is turned off.)
- **Control box houses high temperature parts. Be well careful even after turning off the power source.**
- **Perform the service after disconnecting the fan board connector (CNINV) and the inverter board connector (CN1).**
  (To plug or unplug connectors, check that the outdoor unit fan is not rotating and that the voltage of capacitor in the main circuit is 20 VDC or below. The capacitor may collect a charge and cause an electric shock when the outdoor unit fan rotates in windy conditions. Refer to the wiring nameplate for details.)
- **To connect wiring to TB7, check that the voltage is 20 VDC or below.**
- **Reconnect the connector (CNINV) back to the fan board and reconnect the connector (CN1) back to the inverter board after servicing.**
- **When the power is turned on, the compressor is energized even while it is not operating.**
  - Before turning on the power, disconnect all power supply wires from the compressor terminal block, and measure the insulation resistance of the compressor.
  - Check the compressor for a ground fault. If the insulation resistance is 1.0 MΩ or below, connect all power supply wires to the compressor and turn on the power to the outdoor unit. (The liquid refrigerant in the compressor will evaporate by energizing the compressor.)

11.2. Control box and connecting position of wiring

① **Outdoor unit**

1. Remove the front panel of the control box by removing the 4 screws and pushing it up a little before pulling it out.
2. Connect the indoor - outdoor transmission line to the terminal block (TB3) for the indoor - outdoor transmission line.
   If multiple outdoor units are connected in the same refrigerant system, daisy-chain TB3 (M1, M2, earth terminal ⏚) on the outdoor units. Connect the indoor - outdoor transmission line for the outdoor units to TB3 (M1, M2, earth terminal ⏚) of only one of the outdoor units.
3. Connect the transmission lines for centralized control (between the centralized control system and the outdoor unit of different refrigerant systems) to the terminal block for centralized control (TB7). If the multiple outdoor units are connected to the same refrigerant system, daisy-chain TB7 (M1, M2, S Terminal) on the outdoor units in the same refrigerant system. (*1)

   *1 : If TB7 on the outdoor unit in the same refrigerant system is not daisy-chained, connect the transmission line for centralized control to TB7 on the OC (*2). If the OC is out of order, or if the centralized control is being conducted during the power supply shut-off, daisy-chain TB7 on the OC, OS1 and OS2. (In the case that the outdoor unit whose power supply connector CN41 on the control board has been replaced with CN40 is out of order or the power is shut-off, centralized control will not be conducted even when TB7 is daisy-chained.)
   *2 : OC, OS1 and OS2 of the outdoor units in the same refrigerant system are automatically identified. They are identified as OC, OS1 and OS2 in descending order of capacity. (If the capacity is the same, they will be in ascending order of their address number.)
4. In the case of indoor-outdoor transmission line, connect the shield ground to the earth terminal ⏚. In the case of transmission lines for centralized control, connect it to the shield terminal (S) on the terminal block for centralized control (TB7). Furthermore, in the case of the outdoor units whose power supply connector CN41 is replaced with CN40, short circuit the shield terminal (S) and the earth terminal ⏚ in addition to the above.
5. Fix the connected wires securely in place with the cable strap at the bottom of the terminal block. External force applied to the terminal block may damage it and may cause a short circuit, ground fault, or a fire.
6. When extending the transmission line, make sure to extend the shield cable as well.

GB

[1] Supplied parts

This unit includes the following parts.
⑥ Band ··· 2 pcs.

[2] Preparation for installation

- Check that the main power on the outdoor unit is turned off.
- After turning off the main power, leave it turned off for at least 10 minutes before proceeding the installation work.

[3] Installation

(1) Thread the power source cable through the rubber bushing on the left side. (Refer to Fig. 1, Note 1, and Note 2.)

(2) Thread the unit wiring (sensor wiring) and the transmission cable through the rubber bushing on the right side. (Refer to Fig. 1, Note 1, and Note 2.)

(3) Hold the power source cable and the transmission cable in place respectively with the cable straps. (Refer to Fig. 1)

(4) Connect the cables respectively to the power supply terminal block and the terminal block for transmission line. (Refer to Fig. 1)

(5) Secure each rubber bushing with the supplied band. (Refer to Fig. 1 and Note 3)

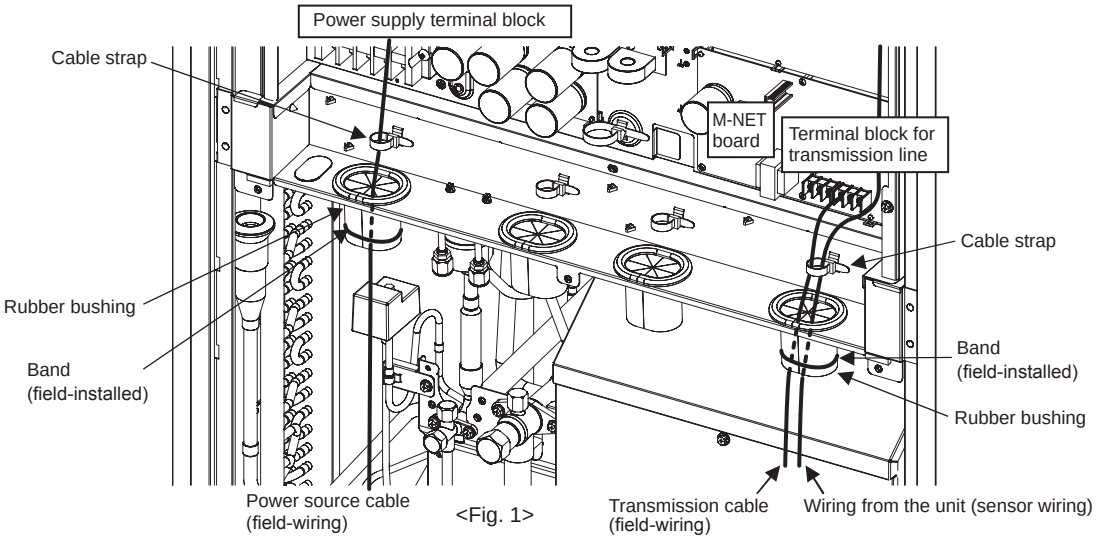

<Fig. 1>

Note 1) Make sure the cables are not coming out of the rubber bushing cut. (Fig. 2 and Fig. 3)

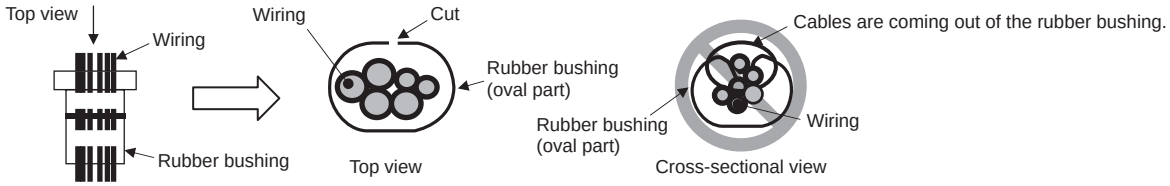

<Fig. 2> <Fig. 3>

Note 2) When threading the wiring through the rubber bushing, make sure the rubber bushing will not come off the sheet metal on the control box guard. (Fig. 4 and Fig. 5)

<Fig. 4> <Fig. 5>

Note 3) When tying the supplied band around the rubber bushing, make sure to leave no gap between the ends. (Fig. 6 and Fig. 7)

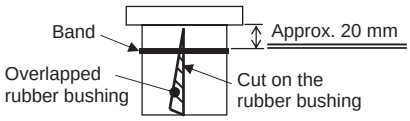

<Fig. 6: Back of the rubber bushing>

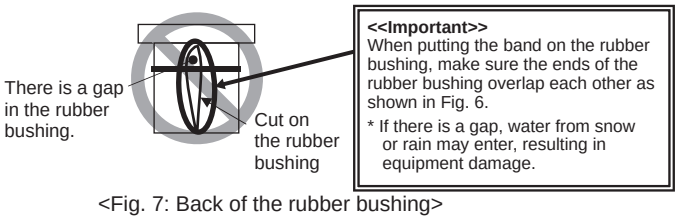

<Fig. 7: Back of the rubber bushing>

[Fig. 11.2.1]

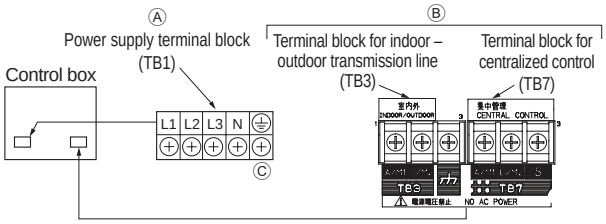

Ⓐ Power source
Ⓑ Transmission line
Ⓒ Earth screw

[Fig. 11.2.2]

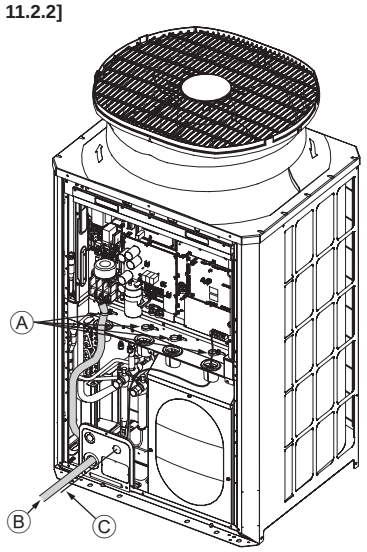

Ⓐ Cable strap
Ⓑ Power source line
Ⓒ Transmission line

- If there are any gaps around the wires, please be sure to fill these in with a suitable material.

② **Conduit tube installation**

- Open by hammering the knockout holes for the conduit tube located on the base and the bottom part of the front panel.
- When installing the conduit tube directly through the knockout holes, remove the burr and protect the tube with masking tape.
- Use the conduit tube to narrow down the opening if there is a possibility of small animals entering the unit.
- When taking the conduit tube out from the bottom part of the unit, caulk around the tube opening to prevent water penetration.

GB

11.3. Wiring transmission cables

① **Types of control cables**

1. Wiring transmission cables

- Types of transmission cables: Shielding wire CVVS, CPEVS or MVVS
- Cable diameter: More than 1.25 mm² or ø1.2 mm
- Maximum wiring length: Within 200 m
- Maximum length of transmission lines for centralized control and indoor/outdoor transmission lines (Maximum length via outdoor units): 500 m MAX
  The maximum length of the wiring between power supply unit for transmission lines (on the transmission lines for centralized control) and each outdoor unit and system controller is 200 m.

2. Remote control cables

- **ME Remote Controller**

Kind of remote control cable	Sheathed 2-core cable (unshielded) CVV
Cable diameter	0.3 to 1.25 mm² (0.75 to 1.25 mm²)*
Remarks	When 10 m is exceeded, use cable with the same specifications as 1. Wiring transmission cables.

- **MA Remote Controller**

Kind of remote control cable	Sheathed 2-core cable (unshielded) CVV
Cable diameter	0.3 to 1.25 mm² (0.75 to 1.25 mm²)*
Remarks	Within 200 m

* Connected with simple remote controller.

② **Wiring examples**

- Controller name, symbol and allowable number of controllers.

Name		Code	Possible unit connections
Outdoor unit	Main unit	OC	– (*2)
	Sub unit	OS1, OS2	– (*2)
Indoor unit	Indoor unit controller	IC	1 to 26 units per 1 OC (*1)
Remote controller	Remote controller (*1)	RC	2 units maximum per group (*3)
Other	Transmission booster unit	RP	0 to 1 unit per 1 OC (*1)

*1 A transmission booster (RP) may be required depending on the number of connected indoor unit controllers.
*2 OC, OS1 and OS2 of the outdoor units in the same refrigerant system are automatically identified. They are identified as OC, OS1 and OS2 in descending order of capacity. (If the capacity is the same, they will be in ascending order of their address number.)
*3 When a PAR-31MAA is connected to a group, no other MA remote controllers can be connected to the same group.

Example of a group operation system with multiple outdoor units (Shielding wires and address setting are necessary.)

<Examples of transmission cable wiring>

[Fig. 11.3.1] ME Remote Controller

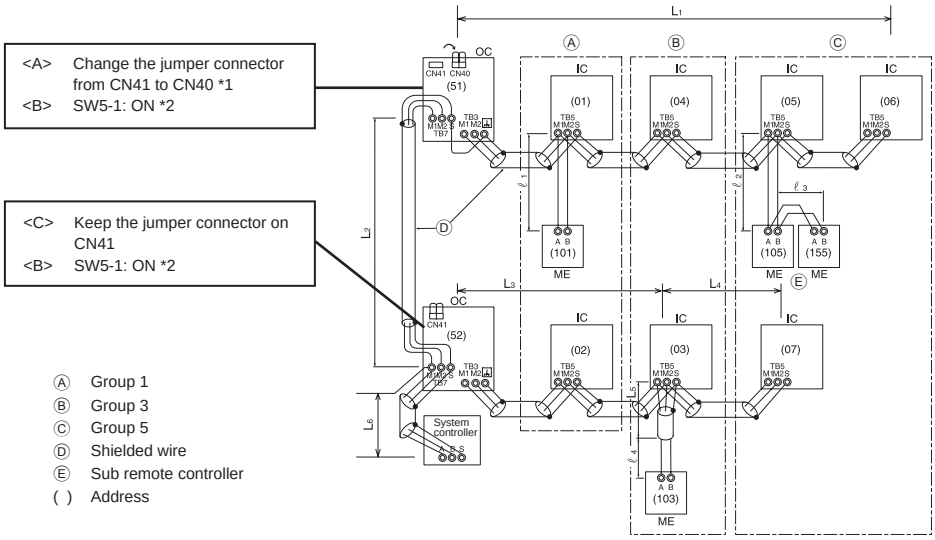

*1 : When the power supply unit is not connected to the transmission line for centralized control, disconnect the male power supply connector (CN41) from ONE outdoor unit in the system and connect it to CN40.

*2 : If a system controller is used, set SW5-1 on all of the outdoor units to ON.

[Fig. 11.3.2] MA Remote Controller

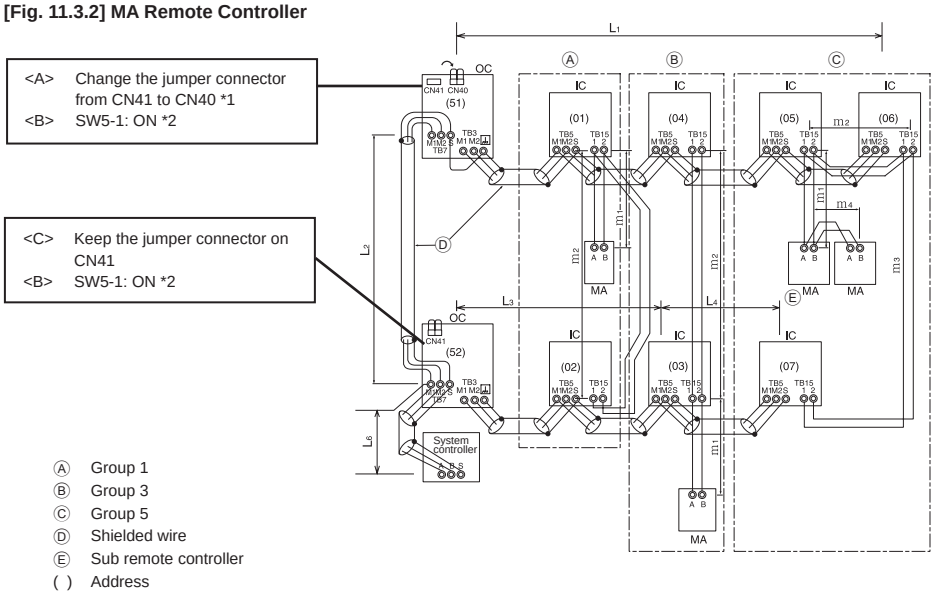

*1 : When the power supply unit is not connected to the transmission line for centralized control, disconnect the male power supply connector (CN41) from ONE outdoor unit in the system and connect it to CN40.

*2 : If a system controller is used, set SW5-1 on all of the outdoor units to ON.

*3 : When a PAR-31MAA is connected to a group, no other MA remote controllers can be connected to the same group.

[Fig. 11.3.3] Combination of outdoor units and transmission booster unit

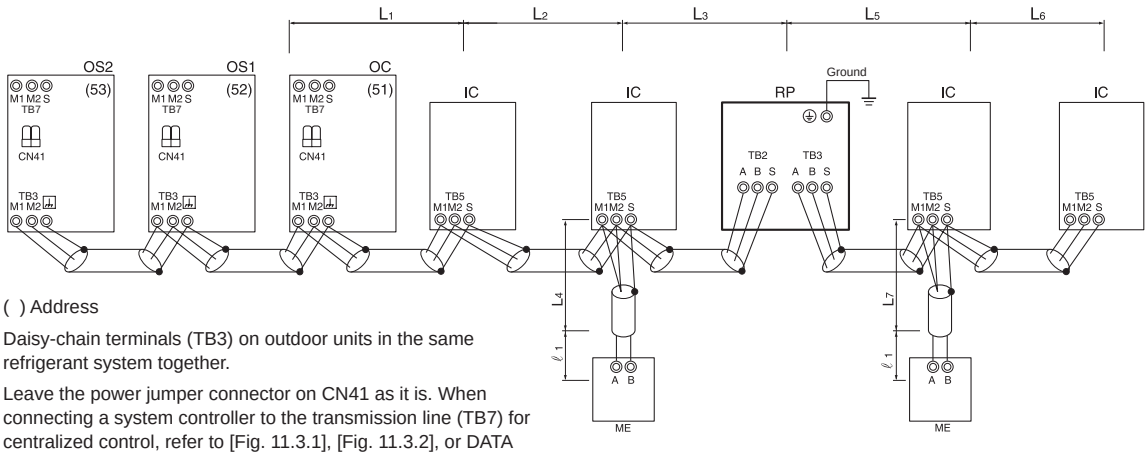

- ( ) Address
- Daisy-chain terminals (TB3) on outdoor units in the same refrigerant system together.
- Leave the power jumper connector on CN41 as it is. When connecting a system controller to the transmission line (TB7) for centralized control, refer to [Fig. 11.3.1], [Fig. 11.3.2], or DATA BOOK.

GB

<Wiring Method and Address Settings>

a. Always use shielded wire when making connections between the outdoor unit (OC) and the indoor unit (IC), as well for all OC-OC, OC-OS, OS-OS and IC-IC wiring intervals.

b. Use feed wiring to connect terminals M1 and M2 and the earth terminal ⏚ on the transmission line terminal block (TB3) of each outdoor unit (OC) to terminals M1, M2 and terminal S on the transmission line block of the indoor unit (IC). For OC and OS, connect TB3 to TB3.

c. Connect terminals 1 (M1) and 2 (M2) on the transmission line terminal block of the indoor unit (IC) that has the most recent address within the same group to the terminal block on the remote controller (RC).

d. Connect together terminals M1, M2 and terminal S on the terminal block for central control (TB7) for the outdoor unit in a different refrigerant system (OC). For OC and OS in the same refrigerant system, connect TB7 to TB7.

e. When the power supply unit is not installed on the central control transmission line, change the jumper connector on the control board from CN41 to CN40 of only one outdoor unit in the system.

f. Connect the terminal S on the terminal block for central control (TB7) for the outdoor unit (OC) for the unit into which the jumper connector was inserted into CN40 in the Step above to the earth terminal ⏚ in the electrical component box.

g. Set the address setting switch as follows.

* To set the outdoor unit address to 100, the outdoor address setting switch must be set to 50.

Unit	Range	Setting Method
Indoor unit (Main)	01 to 50	Use the most recent address within the same group of indoor units
Indoor unit (Sub)	01 to 50	Use an address, other than that of the IC (Main) from among the units within the same group of indoor units. This must be in sequence with the IC (Main)
Outdoor Unit (OC, OS)	51 to 100	Set the addresses of the outdoor units in the same refrigerant system in the order of sequential number. OC, OS1 and OS2 are automatically identified. (*1)
ME R/C (Main)	101 to 150	Set at an IC (Main) address within the same group plus 100
ME R/C (Sub)	151 to 200	Set at an IC (Main) address within the same group plus 150
MA R/C	–	Unnecessary address setting (Necessary main/sub setting) (*2)

*1 OC, OS1 and OS2 of the outdoor units in the same refrigerant system are automatically identified. They are identified as OC, OS1 and OS2 in descending order of capacity. (If the capacity is the same, they are identified in the ascending order of their address number.)

*2 When a PAR-31MAA is connected to a group, no other MA remote controllers can be connected to the same group.

h. The group setting operations among the multiple indoor units is done by the remote controller (RC) after the electrical power has been turned on.

i. When the centralized remote controller is connected to the system, set centralized control switches (SW5-1) on control boards in all outdoor units (OC, OS1 and OS2) to “ON”.

<Permissible Lengths>

① **ME Remote controller [Fig. 11.3.1]**

- Max length via outdoor units: $L_1+L_2+L_3+L_4$ and $L_1+L_2+L_3+L_5$ and $L_1+L_2+L_6 \leqq 500$ m (1.25 mm² or more)
- Max transmission cable length: L_1 and L_3+L_4 and L_3+L_5 and L_6 and $L_2+L_6 \leqq 200$ m (1.25 mm² or more)
- Remote controller cable length: $\ell_1, \ell_2, \ell_3, \ell_4 \leqq 10$ m (0.3 to 1.25 mm²)
  If the length exceeds 10 m, use a 1.25 mm² shielded wire. The length of this section (L_8) should be included in the calculation of the maximum length and overall length.

② **MA Remote controller [Fig. 11.3.2]**

- Max length via outdoor unit (M-NET cable): $L_1+L_2+L_3+L_4$ and $L_1+L_2+L_6 \leqq 500$ m (1.25 mm² or more)
- Max transmission cable length (M-NET cable): L_1 and L_3+L_4 and L_6 and $L_2+L_6 \leqq 200$ m (1.25 mm² or more)
- Remote controller cable length: m_1+m_2 and $m_1+m_2+m_3+m_4 \leqq 200$ m (0.3 to 1.25 mm²)

③ **Transmission booster [Fig. 11.3.3]**

- Max transmission cable length (M-NET cable): ① $L_1+L_2+L_3+L_5+L_6 \leqq 200$ m (1.25 mm²)
  ② $L_1+L_2+L_3+L_5+L_7 \leqq 200$ m (1.25 mm²)
  ③ $L_1+L_2+L_4 \leqq 200$ m (1.25 mm²)
  ④ $L_6+L_5+L_3+L_4$, $L_4+L_3+L_5+L_7 \leqq 200$ m (1.25 mm²)
- Remote controller cable length: $\ell_1, \ell_2 \leqq 10$ m (0.3 to 1.25 mm²)
  If the length exceeds 10 m, use 1.25 mm² shielded cable and calculate the length of that portion (L_4 and L_7) as within the total extended length and the longest remote length.

11.4. Wiring of main power supply and equipment capacity

Schematic Drawing of Wiring (Example)

[Fig. 11.4.1]

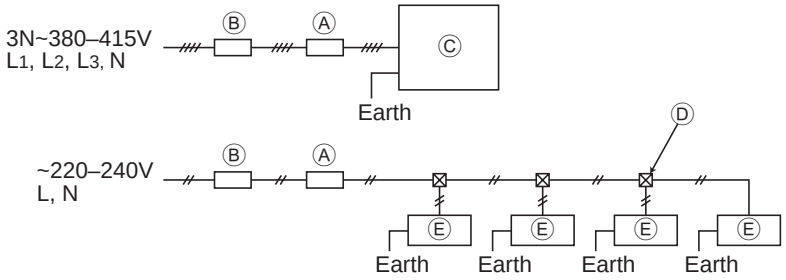

Ⓐ Switch (Breakers for wiring and current leakage) Ⓑ Breakers for current leakage Ⓒ Outdoor unit
Ⓓ Pull box Ⓔ Indoor unit

GB

Thickness of wire for main power supply, on/off capacities of the switch and system impedance

	Model	Minimum wire thickness (mm²)			Breaker for current leakage	Local switch (A)		Breaker for wiring (NFB) (A)	Max. Permissive System Impedance
		Main cable	Branch	Ground		Capacity	Fuse		
Outdoor unit	PUCY-P200YKD	4.0	-	4.0	20A 100 mA 0.1sec. or less	20	20	20	*1
	PUCY-P250YKD	4.0	-	4.0	30A 100 mA 0.1sec. or less	25	25	30	*1
	PUCY-P300YKD	4.0	-	4.0	30A 100 mA 0.1sec. or less	32	32	30	0.26Ω
	PUCY-P350YKD	4.0	-	4.0	30A 100 mA 0.1sec. or less	32	32	30	0.25Ω
	PUCY-P400YKD	6.0	-	6.0	40A 100 mA 0.1sec. or less	40	40	40	0.20Ω
	PUCY-P450YKD	6.0	-	6.0	40A 100 mA 0.1sec. or less	40	40	40	0.20Ω
	PUCY-P500YKD	6.0	-	6.0	40A 100 mA 0.1sec. or less	40	40	40	0.19Ω
Total operating current of the indoor unit	F0=20A or less*2	1.5	1.5	1.5	20 A current sensitivity *3	20	20	20	(apply to IEC 61000-3-3)
	F0=30A or less*2	2.5	2.5	2.5	30 A current sensitivity *3	30	30	30	(apply to IEC 61000-3-3)
	F0=40A or less*2	4.0	4.0	4.0	40 A current sensitivity *3	40	40	40	(apply to IEC 61000-3-3)

*1: Meets technical requirements of IEC61000-3-3

*2: Please take the larger of F1 or F2 as the value for F0.

F1 = Total operating maximum current of the indoor units x 1.2

F2 = [V1 x Quantity of Type A] + [V1 x Quantity of Type B] + [V1 x Quantity of Others]

Indoor unit		V1
Type A	PLFY-VBM, PMFY-VBM, PEFY-VMS, PCFY-VKM, PKFY-VHM, PKFY-VKM, PFFY-VKM, PFFY-VLRMM	1.6
Type B	PEFY-VMA	3.2
Others	Other indoor unit	0

*3: Current sensitivity is calculated using the following formula.

G1 = [V2 x Quantity of Type 1] + [V2 x Quantity of Type 2] + [V2 x Quantity of Others] + [V3 x Wire length [km]]

G1	Current sensitivity
30mA or less	30mA 0.1sec or less
100mA or less	100mA 0.1sec or less

Indoor unit		V2
Type 1	PLFY-VBM, PMFY-VBM, PEFY-VMS, PCFY-VKM, PKFY-VHM, PKFY-VKM, PFFY-VKM, PFFY-VLRMM	2.4
Type 2	PEFY-VMA	1.6
Others	Other indoor unit	0

Wire thickness	V3
1.5 mm²	48
2.5 mm²	56
4.0 mm²	66

1. **Use dedicated power supplies for the outdoor unit and indoor unit. Ensure OC and OS are wired individually.**
2. **Bear in mind ambient conditions (ambient temperature, direct sunlight, rain water, etc.) when proceeding with the wiring and connections.**
3. **The wire size is the minimum value for metal conduit wiring. If the voltage drops, use a wire that is one rank thicker in diameter.**
   Make sure the power-supply voltage does not drop more than 10%. Make sure that the voltage imbalance between the phases is 2% or less.
4. **Specific wiring requirements should adhere to the wiring regulations of the region.**
5. **Power supply cords of parts of appliances for outdoor use shall not be lighter than polychloroprene sheathed flexible cord (design 60245 IEC57). For example, use wiring such as YZW.**
6. **A switch with at least 3 mm contact separation in each pole shall be provided by the Air conditioner installation.**

⚠ Warning:

- **Be sure to use specified wires for connections and ensure no external force is imparted to terminal connections. If connections are not fixed firmly, heating or fire may result.**
- **Be sure to use the appropriate type of overcurrent protection switch. Note that generated overcurrent may include some amount of direct current.**

⚠ Caution:

- **The breakers for current leakage should support Inverter circuit. (e.g. Mitsubishi Electric's NV-S series or equivalent). If no earth leakage breaker is installed, it may cause an electric shock.**
- **Breakers for current leakage should combine using of switch.**
- **Do not use anything other than a breaker with the correct capacity. Using a breaker of too large capacity may cause malfunction or fire.**
- **If a large electric current flows due to malfunction or faulty wiring, earth-leakage breakers on the unit side and on the upstream side of the power supply system may both operate.**
  Depending on the importance of the system, separate the power supply system or take protective coordination of breakers.

Note:

- **This device is intended for the connection to a power supply system with a maximum permissible system impedance shown in the above table at the interface point (power service box) of the user's supply.**
- **The user must ensure that this device is connected only to a power supply system which fulfils the requirement above.**
  If necessary, the user can ask the public power supply company for the system impedance at the interface point.
- **This equipment complies with IEC 61000-3-12 provided that the short-circuit power Ssc is greater than or equal to Ssc (*2) at the interface point between the user's supply and the public system. It is the responsibility of the installer or user of the equipment to ensure, by consultation with the distribution network operator if necessary, that the equipment is connected only to a supply with a short-circuit power Ssc greater than or equal to Ssc (*2).**

S_{SC} (*2)

Model	S_{SC} (MVA)
PUCY-P200YKD	1.40
PUCY-P250YKD	1.74
PUCY-P300YKD	2.14
PUCY-P350YKD	2.23
PUCY-P400YKD	2.71
PUCY-P450YKD	2.74
PUCY-P500YKD	2.92

12. Test run

12.1. Typical unit operation

Items to be checked before a test run

- Measure the insulation resistance between the power supply terminal block and the ground with a 500 V ohmmeter, and check that it reads at least 1.0 MΩ.
  - If the insulation resistance is 1.0 MΩ or below, turn on the main power to the unit and energize the compressor for at least 12 hours.

⚠ Warning:

- **The compressor is energized when the main power to the unit is turned on. Make sure to turn off the power before disconnecting the compressor power source cable from the terminal block to measure the insulation resistance.**
- **If the insulation resistance is 1.0 MΩ or below, do not operate the unit.**

- Turn on the power at least 12 hours before performing a test run.
  - Doing so will energize the compressor and evaporate the refrigerant in the compressor.

⚠ Caution:

- **Insufficient energizing may result in compressor damage.**

The events listed in the table below are normal occurrences and do not represent operation problems.

Events	Display on remote controller	Cause
Auto vane automatically switches air flow direction.	**Normal display**	The auto vane may switch over to horizontal air flow operation from vertical air flow operation in cooling mode if the vertical air flow operation has been running for 1 hour. At defrost in heating mode or immediately after heating start-up/shutdown, the auto vane automatically switches to horizontal air flow for a short time.
Indoor unit remote controller displays “HO” or “PLEASE WAIT” for about 5 minutes after turning on the universal power supply.	**“HO” or “PLEASE WAIT” flashes**	System is performing the initial operating sequence. Remote controller will be operable again after “HO” or “PLEASE WAIT” stops flashing and disappears.
Drain pump continues to operate even after the unit has been turned off.	**No display**	After turning off the cooling operation, unit continues to operate the drain pump for 3 minutes, then shuts it off. Unit also continues to operate drain pump if condensate has been generated.
Immediately after startup, the indoor unit emits the sound of the refrigerant flow.	**Normal display**	Unstable flow of the refrigerant emits a sound. This is temporary and does not imply a problem.

12.2. Outdoor unit function setting

Function settings can be made by setting SW6 on the outdoor unit control board.

<SW6 setting item list>

Item	Switch	Setting content	SW6 setting		Switch setting timing
			OFF	ON	
Setting	SW6-1	–	–	–	–
	SW6-2	–	–	–	–
	SW6-3	–	–	–	–
	SW6-4	High static pressure setting (unit model selection)	Standard static pressure	High static pressure	Before being energized (*1)
	SW6-5	High static pressure setting (selection of 60 Pa or 30 Pa)	60 Pa	30 Pa	Before being energized (*1)
	SW6-6	–	–	–	–
	SW6-7	Low-noise mode selection	Performance priority	Low-noise priority	Any time after being energized (*2)
	SW6-8	Selection of Low-noise or Demand	Low-noise (Night)	Demand	Before being energized (*1)
	SW6-9	–	–	–	–
	SW6-10	Selection of Diagnostic display or Function detail setting	Diagnostic display	Function detail setting	Any time after being energized (*2)

*1 The DIPSW setting can be made before the unit is energized.
*2 The DIPSW setting can be made any time after the unit is energized.

Note:

- **Unless otherwise specified, leave the switch to OFF where indicated by "-," which may be set to OFF for a reason.**

GB

13. Information on rating plate

PUCY-P-Y(S)KD

Model	P200YKD	P250YKD	P300YKD	P350YKD	P400YKD	P450YKD	P500YKD	P550YSKD		P600YSKD	
Unit combination	-	-	-	-	-	-	-	P300	P250	P350	P250
Refrigerant (R410A)	5.5 kg	6.5 kg	6.5 kg	11.5 kg	11.5 kg	11.5 kg	11.8 kg	6.5 kg	6.5 kg	11.5 kg	6.5 kg
Allowable pressure (Ps)	HP: 4.15 MPa, LP: 2.21 MPa										
Net weight	174	183	200	236	236	236	304	200	183	236	183

Model	P650YSKD		P700YSKD		P750YSKD		P800YSKD		P850YSKD	
Unit combination	P400	P250	P450	P250	P450	P300	P400	P400	P450	P400
Refrigerant (R410A)	11.5 kg	6.5 kg	11.5 kg	6.5 kg	11.5 kg	6.5 kg	11.5 kg	11.5 kg	11.5 kg	11.5 kg
Allowable pressure (Ps)	HP: 4.15 MPa, LP: 2.21 MPa									
Net weight	236	183	236	183	236	200	236	236	236	236

Model	P900YSKD		P950YSKD		P1000YSKD		P1050YSKD		
Unit combination	P450	P450	P500	P450	P500	P500	P450	P300	P300
Refrigerant (R410A)	11.5 kg	11.5 kg	11.8 kg	11.5 kg	11.8 kg	11.8 kg	11.5 kg	6.5 kg	6.5 kg
Allowable pressure (Ps)	HP: 4.15 MPa, LP: 2.21 MPa								
Net weight	236	236	304	236	304	304	236	200	200

Model	P1100YSKD			P1150YSKD			P1200YSKD		
Unit combination	P450	P350	P300	P350	P400	P400	P400	P400	P400
Refrigerant (R410A)	11.5 kg	11.5 kg	6.5 kg	11.5 kg	11.5 kg	11.5 kg	11.5 kg	11.5 kg	11.5 kg
Allowable pressure (Ps)	HP: 4.15 MPa, LP: 2.21 MPa								
Net weight	236	236	200	236	236	236	236	236	236

Model	P1250YSKD			P1300YSKD			P1350YSKD		
Unit combination	P450	P400	P400	P450	P450	P400	P450	P450	P450
Refrigerant (R410A)	11.5 kg	11.5 kg	11.5 kg	11.5 kg	11.5 kg	11.5 kg	11.5 kg	11.5 kg	11.5 kg
Allowable pressure (Ps)	HP: 4.15 MPa, LP: 2.21 MPa								
Net weight	236	236	236	236	236	236	236	236	236

Model	P1400YSKD			P1450YSKD			P1500YSKD		
Unit combination	P450	P450	P500	P450	P500	P500	P500	P500	P500
Refrigerant (R410A)	11.5 kg	11.5 kg	11.8 kg	11.5 kg	11.8 kg	11.8 kg	11.8 kg	11.8 kg	11.8 kg
Allowable pressure (Ps)	HP: 4.15 MPa, LP: 2.21 MPa								
Net weight	236	236	304	236	304	304	304	304	304

PUCY-EP-YSKD

Model	EP400YSKD		EP450YSKD		EP500YSKD		EP650YSKD		EP700YSKD	
Unit combination	P200	P200	P250	P200	P250	P250	P350	P300	P350	P350
Refrigerant (R410A)	5.5 kg	5.5 kg	6.5 kg	5.5 kg	6.5 kg	6.5 kg	11.5 kg	6.5 kg	11.5 kg	11.5 kg
Allowable pressure (Ps)	HP: 4.15 MPa, LP: 2.21 MPa									
Net weight	174	174	183	174	183	183	236	200	236	236

Model	EP750YSKD			EP800YSKD			EP850YSKD		
Unit combination	P350	P200	P200	P350	P250	P200	P350	P250	P250
Refrigerant (R410A)	11.5 kg	5.5 kg	5.5 kg	11.5 kg	6.5 kg	5.5 kg	11.5 kg	6.5 kg	6.5 kg
Allowable pressure (Ps)	HP: 4.15 MPa, LP: 2.21 MPa								
Net weight	236	174	174	236	183	174	236	183	183

Model	EP900YSKD			EP950YSKD			EP1000YSKD		
Unit combination	P350	P300	P250	P350	P300	P300	P350	P350	P300
Refrigerant (R410A)	11.5 kg	6.5 kg	6.5 kg	11.5 kg	6.5 kg	6.5 kg	11.5 kg	11.5 kg	6.5 kg
Allowable pressure (Ps)	HP: 4.15 MPa, LP: 2.21 MPa								
Net weight	236	200	183	236	200	200	236	236	200

Model	EP1050YSKD			EP1100YSKD		
Unit combination	P350	P350	P350	P400	P350	P350
Refrigerant (R410A)	11.5 kg	11.5 kg	11.5 kg	11.5 kg	11.5 kg	11.5 kg
Allowable pressure (Ps)	HP: 4.15 MPa, LP: 2.21 MPa					
Net weight	236	236	236	236	236	236

GB

MITSUBISHI ELECTRIC

AIR CONDITIONER OUTDOOR UNIT

MODEL

REFRIGERANT	R410A kg
ALLOWABLE PRESSURE(Ps)	HP 4.15MPa (41.5bar) LP 2.21MPa (22.1bar)
WEIGHT	kg
IP CODE	IP24
YEAR OF MANUFACTURE	

SERIAL No.

OPERATION		COOLING (T1) SPECIFICATION			TESTED (T3) COOLING CAPACITY
RATED VOLTAGE 3N~	V	380	400	415	400
FREQUENCY	Hz	50 / 60			50
CAPACITY	kW kcal/h Btu/h				
RATED INPUT	kW				
ENERGY EFFICIENCY CONSUMPTION	Btu/h/W				
RATED CURRENT	A				
MAX CURRENT (INDOOR 35°CDB,24°CWB, OUTDOOR 43°CDB)	A				
RATED CONDITION DB / WB	°C	INDOOR 27 / 19 OUTDOOR 35 / 24			INDOOR 29 / 19 OUTDOOR 46 / 24

Contains fluorinated greenhouse gases.

MANUFACTURER:
MITSUBISHI ELECTRIC
CONSUMER PRODUCTS (THAILAND) CO., LTD.
700/406 MOO 7, TAMBON DON HUA ROH,
AMPHUR MUANG, CHONBURI 20000, THAILAND
MADE IN THAILAND

This product is designed and intended for use in the residential, commercial and light-industrial environment.

The product at hand is based on the following EU regulations:

- Low Voltage Directive 2014/35/EU
- Electromagnetic Compatibility Directive 2014/30/EU
- Pressure Equipment Directive 2014/68/EU
- Machinery Directive 2006/42/EC

Не забудьте указать контактный адрес/номер телефона в данном руководстве, прежде чем передать его клиенту.
Please be sure to put the contact address/telephone number on this manual before handing it to the customer.

MITSUBISHI ELECTRIC CORPORATION

Название Компании: ООО «Мицубиси Электрик (РУС)»
Адрес: Россия, 115054, Москва, Космодамианская наб., д. 52, стр. 1
HEAD OFFICE: TOKYO BLDG., 2-7-3, MARUNOUCHI, CHIYODA-KU, TOKYO 100-8310, JAPAN
Production plants: AMATA CITY CHONBURI 700/406 MOO 7, TAMBON DON HUA ROH, AMPHUR MUANG, CHONBURI 20000, THAILAND

VG79D807H02

Отпечатано в Таиланде
(Printed in Thailand)