Product data sheet

MLG25N-0275U10801

MLG-2

MEASURING AUTOMATION LIGHT GRIDS

SICK
Sensor Intelligence.

Illustration may differ

Ordering information

Type	Part no.
MLG25N-0275U10801	1222513

Other models and accessories ➜ www.sick.com/MLG-2

Detailed technical data

Features

Device version	ProNet - Replacement product (for MLG-1 with terminals)
Sensor principle	Sender/receiver
Minimum detectable object (MDO)	25 mm, 29 mm [1) 2) 3)]
Beam separation	25 mm
Type of synchronization	Cable
Number of beams	12
Detection height	275 mm
Software features (default)	
Interface RS-485	Beam status
Baud rate RS-485	9.6 kbit/s
Q_1	Presence detection
Q_2	Presence detection inverted
Q_3	Contamination warning
Q_4	Presence detection
Q5	off
Q6	off
In_1	Teach input
In_2	off
Operating mode	
Standard	✓
Transparent	✓
Dust- and sunlight-resistant	✓
Function	

[1)] MDO min. detectable object at high measurement accuracy.
[2)] MDO min. detectable object for standard measurement accuracy.
[3)] Depending on beam separation without cross beam setting.

Cross beam	✓
Beam blanking	✓
High measurement accuracy	✓
Applications	
Switching output	Object recognition/object width Object recognition Height classification Hole detection/hole size Outside dimension/inside dimension Object position Hole position Zone definition
Data interface	Object detection Hole detection Object height measurement Measurement of external dimension Measurement of inside dimension Measurement of object position Measurement of hole position
Included with delivery	1 × sender 1 × receiver 1 x Fieldbus module 4/6 x QuickFix brackets (6 x QuickFix brackets for monitoring heights above 2 m) 1 × Quick Start Guide

[1] MDO min. detectable object at high measurement accuracy.
[2] MDO min. detectable object for standard measurement accuracy.
[3] Depending on beam separation without cross beam setting.

Mechanics/electronics

Light source	LED, Infrared light
Wave length	850 nm
Supply voltage V_s	DC 19.2 V ... 28.8 V [1]
Power consumption sender	55.6 mA [2]
Power consumption receiver	122.4 mA [2]
Fieldbus module current consumption	115 mA
Ripple	< 5 V_{pp}
Output current $I_{max.}$	100 mA
Output load, capacitive	100 nF
Output load, Inductive	1 H
Initialization time	< 1 s
Switching output	Push-pull: PNP/NPN
Connection type	Male connector M12, 5-pin, 0.22 m Connector M12, 12-pin, 0.21 m
Housing material	Aluminum
Indication	LED
Enclosure rating	IP65, IP67 [3]

[1] Without load.
[2] , Without load with 24 V.
[3] Operating in outdoor condition only with a external protection housing.

Circuit protection	U_V connections, reverse polarity protected Output Q short-circuit protected Interference pulse suppression
Protection class	III
Weight	0.849 kg
Front screen	PMMA
Option	None

[1] Without load.
[2] , Without load with 24 V.
[3] Operating in outdoor condition only with a external protection housing.

Performance

Maximum range	12 m [1]
Minimum range	≥ 0 m
Operating range	8.5 m
Response time	3.5 ms [2]

[1] No reserve for environmental issue and deterioration of the diode.
[2] Without high speed.

Communication interface

Serial	✓, RS-485
Data transmission rate	1.2 kbit/s ...921.6 kbit/s
Inputs/outputs	RS-485 + 6 x Q + 2 x I/O
Digital output	Q_1 ... Q_6
Number	6
Digital input	In_1, In_2
Number	2

Ambient data

Shock resistance	Continuous shocks 10 g, 16 ms, 1000 shocks Single shocks 15 g, 11 ms 3 per axle
Vibration resistance	Sinusoidal oscillation 10-150 Hz 5 g
EMC	EN 60947-5-2
Ambient light immunity	Direct: 150,000 lx [1] Indirect: 200,000 lx [2]
Ambient operating temperature	–30 °C ... +55 °C
Ambient temperature, storage	–40 °C ... +70 °C

[1] Outdoor mode.
[2] Light resistance indirect.

Classifications

ECLASS 5.0	27270910
ECLASS 5.1.4	27270910
ECLASS 6.0	27270910
ECLASS 6.2	27270910
ECLASS 7.0	27270910

ECLASS 8.0	27270910
ECLASS 8.1	27270910
ECLASS 9.0	27270910
ECLASS 10.0	27270910
ECLASS 11.0	27270910
ECLASS 12.0	27270910
ETIM 5.0	EC002549
ETIM 6.0	EC002549
ETIM 7.0	EC002549
ETIM 8.0	EC002549
UNSPSC 16.0901	39121528

Dimensional drawing (Dimensions in mm (inch))

Dimensional drawing

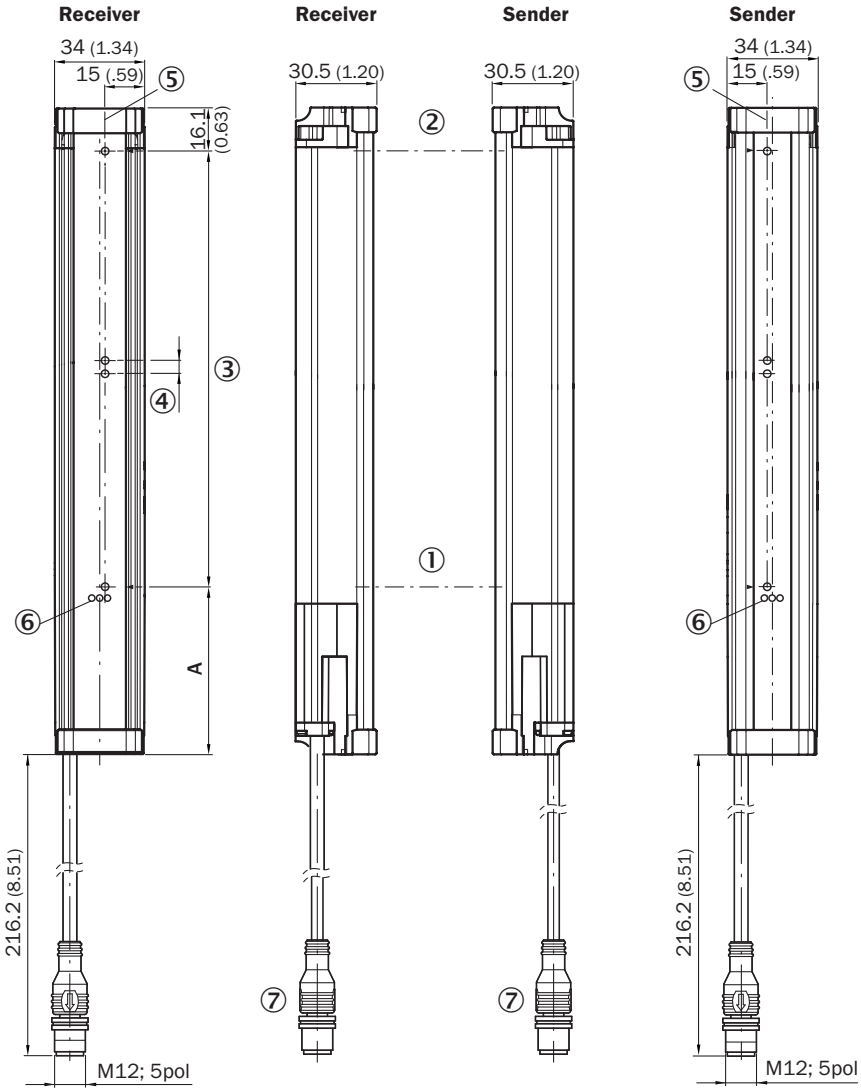

	A [1]
Beam separation 5 mm	63.3 (2.49)
Beam separation 10 mm	68.3 (2.69)
Beam separation 20 mm	68.3 (2.69)/78.3 (3.08) [2]
Beam separation 25 mm	83.3 (3.28)
Beam separation 30 mm	88.3 (3.48)
Beam separation 50 mm	108.3 (4.26)

[1] Distance: MLG edge - first beam
[2] MLG20x-xx**40**: 68.3 mm
MLG20x-xx**80**: 78.3 mm

① First beam
② Last beam
③ Detection height (see technical data)
④ Beam separation
⑤ Optical axis
⑥ Status indicator: green, yellow, red LEDs
⑦ Connection

Dimensional drawing: terminal connection box (AFB)

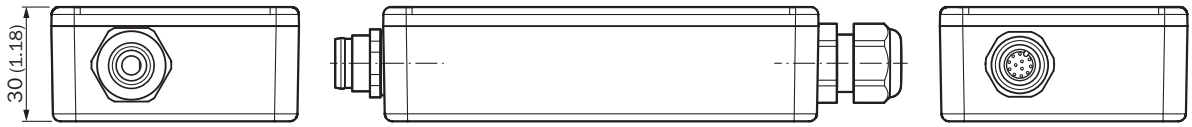

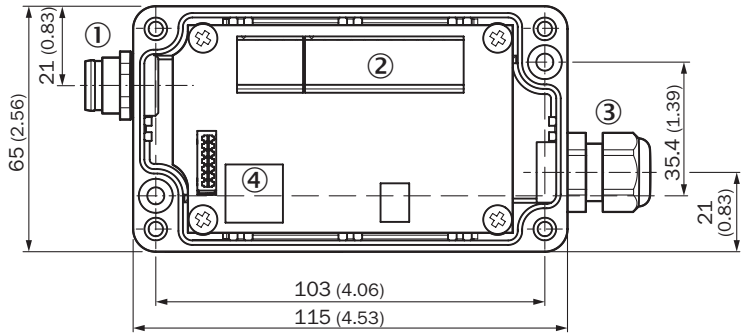

① Female connector M12, 12-pin
② Cable gland
③ PG gland
④ RJ45 (Ethernet)

Adjustments

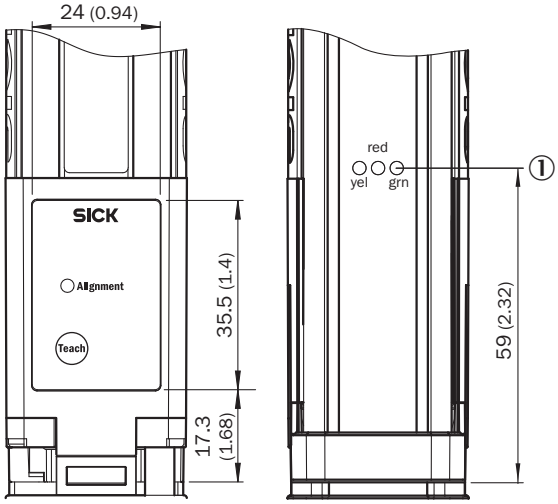

① Status indicator: green, yellow, red LEDs

Connection type and diagram

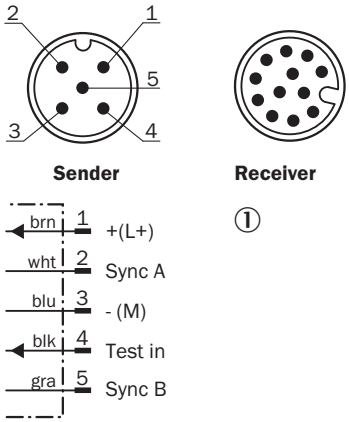

① Connection to terminal connection box (AFB)

Pin assignment

Terminal connection box (AFB)

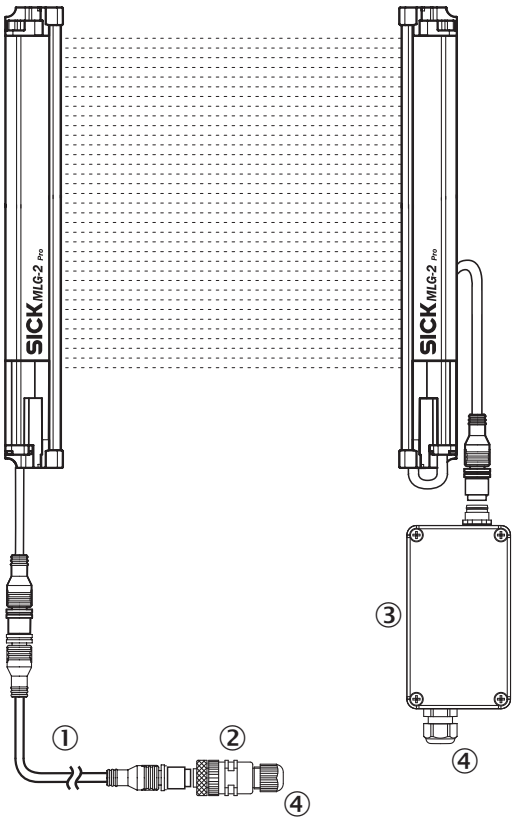

① Connection cable (6057015)
② Female connector M12, 5-pin (6009719)
③ Terminal connection box (AFB)
④ For connection to PLC / PIN assignment, see technical information (MLG-2 as upgrade product for MLG-1 and XLG)

Recommended accessories

Other models and accessories ➜ www.sick.com/MLG-2

	Brief description	Type	Part no.
Plug connectors and cables			
	• **Connection type head A:** Female connector, M12, 5-pin, straight • **Connection type head B:** Male connector, M12, 8-pin, straight • **Signal type:** Sensor/actuator cable • **Cable:** 0.1 m, 5-wire, PUR, halogen-free • **Description:** Sensor/actuator cable, unshielded • **Application:** Zones with oils and lubricants, Drag chain operation	DSL-1258-G0M1C	6057015
	• **Connection type head A:** Male connector, RJ45 • **Connection type head B:** Male connector, RJ45 • **Signal type:** Ethernet • **Cable:** 3 m, crossover • **Description:** Ethernet, unshielded	Ethernet crossover cable	6026084
	• **Connection type head A:** Female connector, M12, 5-pin, straight • **Description:** Unshielded, Head A: female connector, M12, 5-pin, straight, unshielded, for cable diameter 4 mm ... 6 mm Head B: - • **Connection systems:** Screw-type terminals • **Permitted cross-section:** ≤ 0.75 mm²	DOS-1205-G	6009719
Terminal and alignment brackets			
	Mounting bracket for external mounting of the fieldbus module, 1 × mounting bracket and 1 × M5 × 6 screw, Stainless steel V2A (1.4301)	BEF-WN-FBM-SET1	2082322

SICK AT A GLANCE

SICK is one of the leading manufacturers of intelligent sensors and sensor solutions for industrial applications. A unique range of products and services creates the perfect basis for controlling processes securely and efficiently, protecting individuals from accidents and preventing damage to the environment.

We have extensive experience in a wide range of industries and understand their processes and requirements. With intelligent sensors, we can deliver exactly what our customers need. In application centers in Europe, Asia and North America, system solutions are tested and optimized in accordance with customer specifications. All this makes us a reliable supplier and development partner.

Comprehensive services complete our offering: SICK LifeTime Services provide support throughout the machine life cycle and ensure safety and productivity.

For us, that is "Sensor Intelligence."

WORLDWIDE PRESENCE:

Contacts and other locations –www.sick.com

SICK
Sensor Intelligence.