ENGINEERING
TOMORROW

Data Sheet

RLV-KDV H-Piece for valve radiators - blockable and drainable, with integrated differential pressure control

Application

RLV-KDV is a Dynamic H-piece designed for radiators with integrated valves (valve radiators) in 2-pipe systems. RLV-KDV combines the following functions:

- Integrated differential pressure controller using membrane technology.
- Constant pressure over the radiator and valve in full and partial load.
- Self-balancing to optimal pressure conditions once the flow presetting on the integrated radiator-valve is done.
- Lockshield on supply and return.
- Filling and draining possibility (with fill and drain tap 003L0152).
- Self sealing connection pieces to the radiator for G ½ internal thread and G ¾ external thread.

The flow adjustment presetting is done on the radiator valve. As a result the heating system is self balancing to the preset volume in the integrated valve and working on optimal conditions in full and partial demand.

This results in lowered return temperature, energy saving and preventing claims due to noise in the radiator.

Self sealing connection pieces ensure that RLV-KDV can be used both for radiators with an internal thread of G ½ and with an external thread of G ¾ A.

A fill and drain tap is available as an accessory. Connection to copper, soft steel, PEX and Alupex pipes is made with Danfoss compression fittings. See separate datasheet.

In order to avoid deposition and corrosion, the composition of the hot water should be in accordance with the VDI 2035 guideline (Verein Deutscher Ingenieure).

System

Two-pipe system with valve radiators, typical connection types.

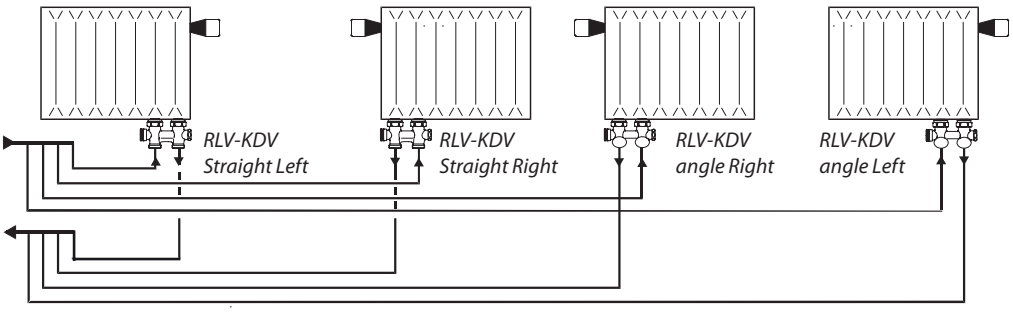

Ordering and data

Type	Version	Connection		Max. operation pressure	Test pressure	Max. water temp.	△p min/ △p max	**Code no.**
		Radiator	System					
RLV-KDV with constant differential pressure control	Straight R & L	G ½	G ¾ A	10 bar	16 bar	95 °C	0.15 bar / 0.60 bar	**013G7870**
	Angle Right							**013G7871**
	Angle Left							**013G7872**
	Straight R & L	G ¾	G ¾ A					**013G7873**
	Angle Right							**013G7874**
	Angle Left							**013G7875**

Capacities

RA-N									
Presetting		1	2	3	4	5	6	7	N
No Sensor	Max. (l/h)	43	55	71	85	117	139	148	159
Gas Sensor	Xp1	35	50	65	75	95	105	115	125
	Xp2	35	50	65	75	110	120	135	150
Liquid Sensor	Valve-kv*	0.088	0.131	0.163	0.200	0.288	0.369	0.456	0.544
	Xp1	28	40	50	55	70	75	80	85
	Xp2	35	50	65	75	95	105	120	130

** kv-value used for presetting of non-Danfoss integrated valves in radiators*

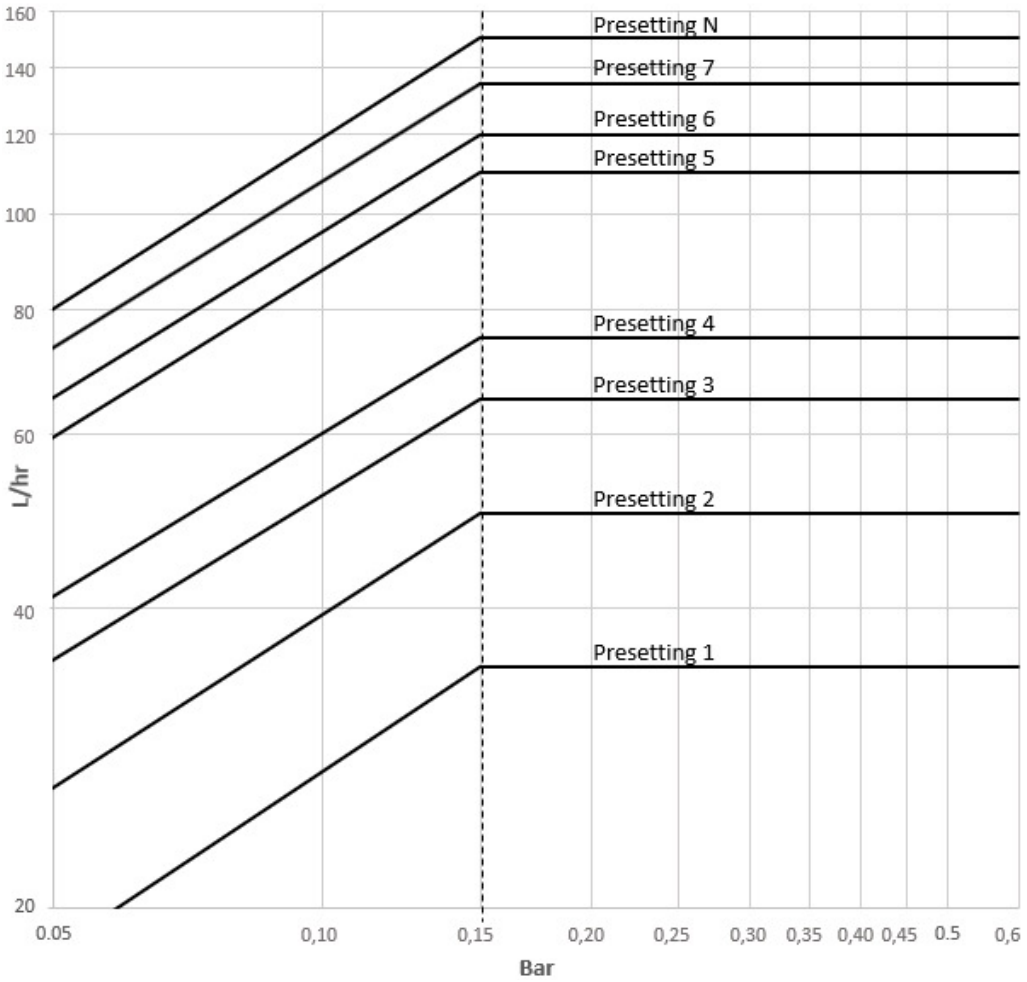

(Capacities comply to all radiators inside a -+ 10% span depending on the radiator type and size.)

Capacities

RA-U									
Presetting		1	2	3	4	5	6	7	N
No Sensor	Max. (l/h)	16	16	21	35	40	50	70	110
Gas Sensor	Xp1	12	14	16	25	30	40	60	80
	Xp2	12	14	16	25	35	45	65	100
Liquid Sensor	Valve-Kv*	0.025	0.031	0.044	0.056	0.081	0.113	0.150	0.213
	Xp1	10	12	14	20	25	30	45	60
	Xp2	10	12	14	20	30	40	60	80

* *kv-value used for presetting of non-Danfoss integrated valves in radiators*

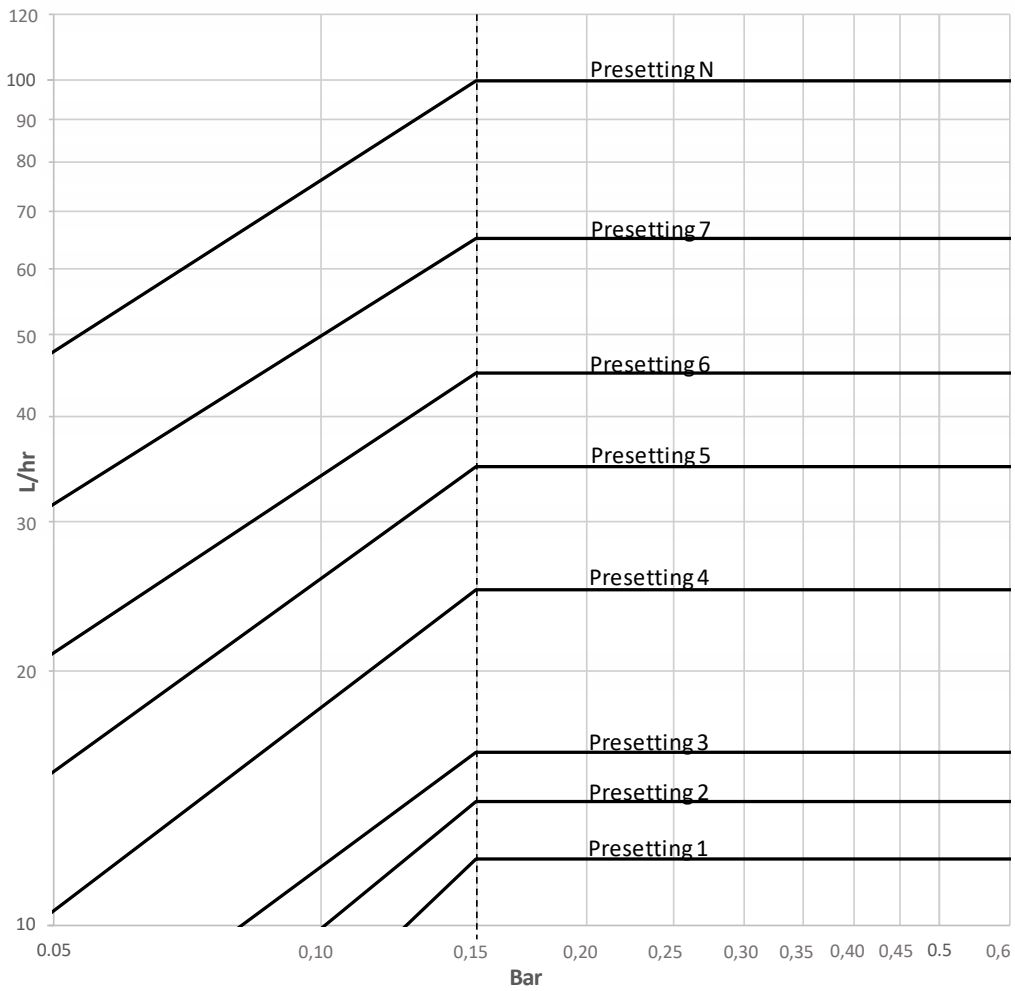

(Capacities comply to all radiators inside a -+ 10% span depending on the radiator type and size.)

Presetting the Built-in valve

1 **New setup with Danfoss Built-in-valve:**
When installing the Danfoss Dynamic H-Piece, then after finding the l/h needed for the radiator, go into the graph for the valve type (N or U) and pre-set the Built-in-valve according to the graph.

2 **Replacing old H-Piece with Dynamic H-Piece, using Danfoss Built-in-valve:**
When replacing the H-Piece, first identify the Built-in-valve type mounted on radiator (N or U). This is done according to the Danfoss Valve Marking (see below). Hereafter, find the required l/h and use graph of the Built-in-valve type above to find the pre-setting of the Built-in-valve.

3 **Build-in valves from other manufacturers:**
When mounting on radiator with Built-in-valve from other manufacturer, then first find the required l/h needed for the radiator. Thereafter, look in the graph above to find the danfoss pre-setting. Then, use Capacity table to find the kv-valvue for the found pre-setting. Use this kv-value to pre-set the Built-in-valve with the help from manufactures data.

Danfoss valve marking

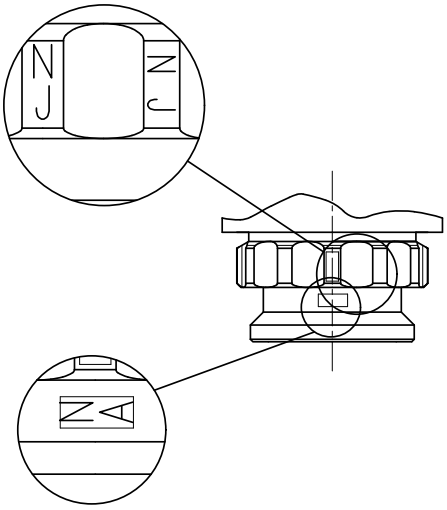

Valve Type	Marking
RA-N	NA, ND, NI, NJ, NK, NE, NM, NL, NO, NG
RA-U	UA, UD, UI, UJ, UK, UO

Draining the radiator

1

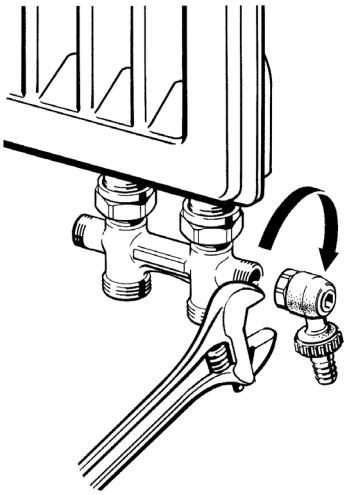

To drain the radiator, first unscrew the cover caps. Then shut off the inlet and return flow.

2

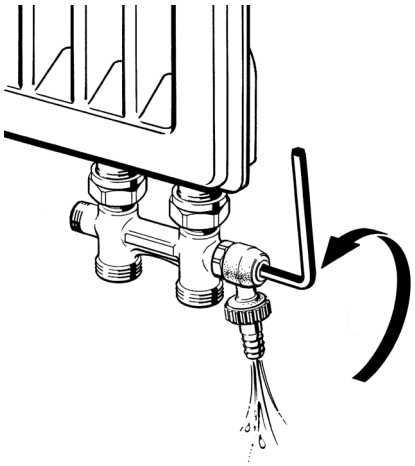

When the drain tap has been mounted (1), open by turning the Allen key (2).

Accessories

Product		Code no.
	Fill and drain tap without nickel plating, with ¾" external thread and hose nozzle	**003L0152**
	Adapter including seal for valve radiator with G¾ A external thread	**003L0294**
	Self-sealing connection nipple for valve radiator with G½ internal thread	**003L0295**
	RLV Cover caps Ø25, M22, Nickle	**003L0103**

Design

1. Valve radiator
2. Integrated valve
3. Self-sealing adapter DN20
4. Seal
5. Shut-off inlet
6. Shut-off outlet
7. Draining facility, outlet
8. Self-sealing adapter DN15
9. DeltaP Regulator

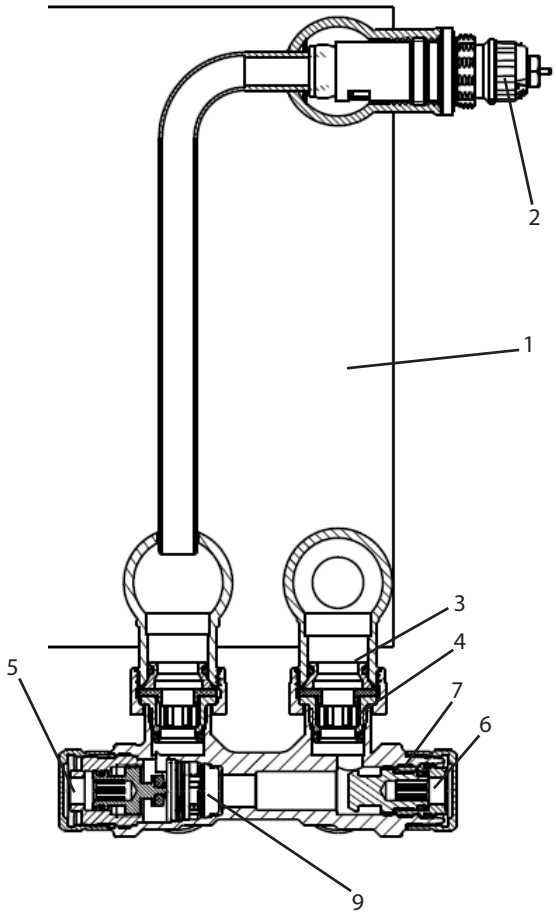

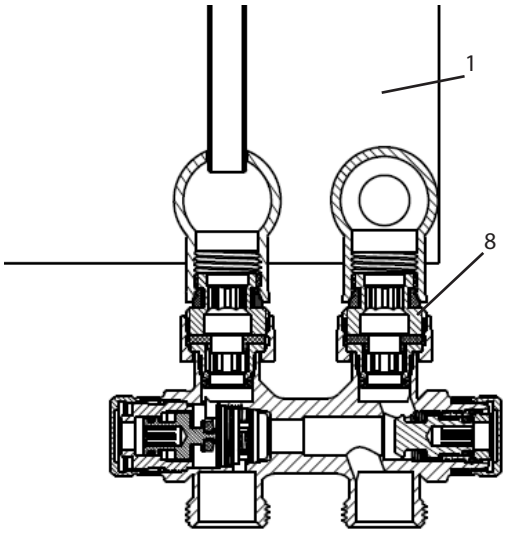

Materials in contact with water	
Valve body and other brass parts	MS58
Spring	SS EN 10270-3
Membrane	EPDM
O-rings	EPDM/NBR
Valve plate	NBR
Washer	CW452K
Seal	EPDM

Dimensions

Radiator Connection	Version			Code no.
G½	Straight Supply-line Right & Left	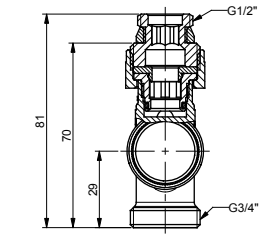	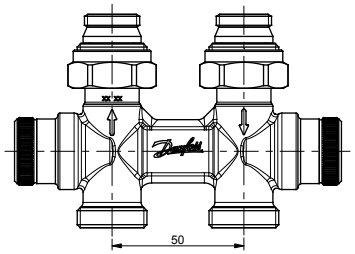	**013G7870**
	Angle Supply-line Right	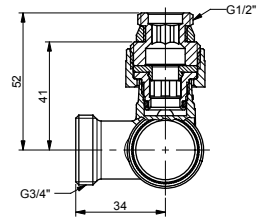	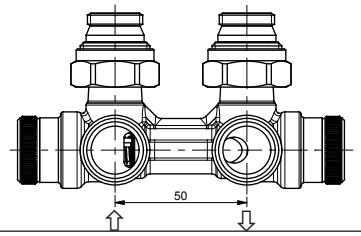	**013G7871**
	Angle Supply-line Left	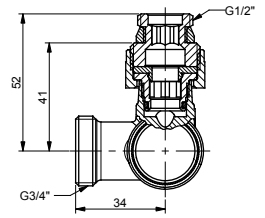	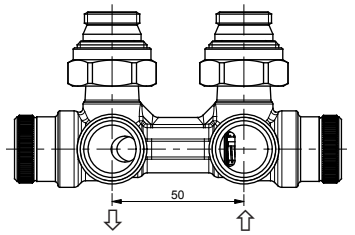	**013G7872**
G¾	Straight Supply-line Right & Left	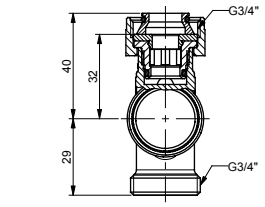	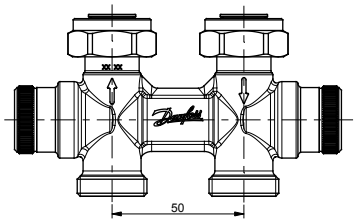	**013G7873**
	Angle Supply-line Right	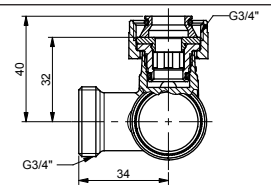	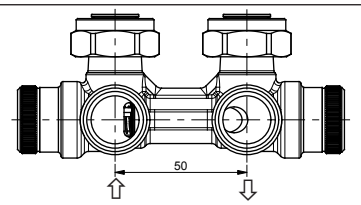	**013G7874**
	Angle Supply-line Left	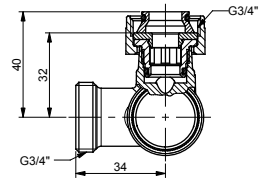	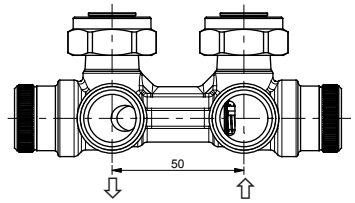	**013G7875**
	Fill and drain tap	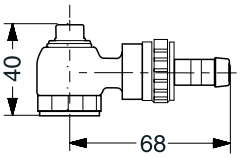		**003L0152**

Danfoss A/S
Heating Segment, Salg Danmark • varme.danfoss.dk • +45 6991 8080 • E-Mail: kundeservice.dk@danfoss.com

Danfoss påtager sig intet ansvar for mulige fejl i kataloger, brochurer og andet trykt materiale. Danfoss forbeholder sig ret til uden forudgående varsel at foretage ændringer i sine produkter, herunder i produkter, som allerede er i ordre, såfremt dette kan ske uden at ændre allerede aftalte specifikationer.
Alle varemærker i dette materiale tilhører de respektive virksomheder. Danfoss og alle Danfoss logoer er varemærker tilhørende Danfoss A/S. Alle rettigheder forbeholdes.