Installation guide

# RLV-KDV

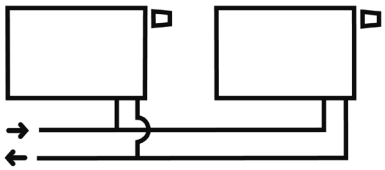

013R9654

1)

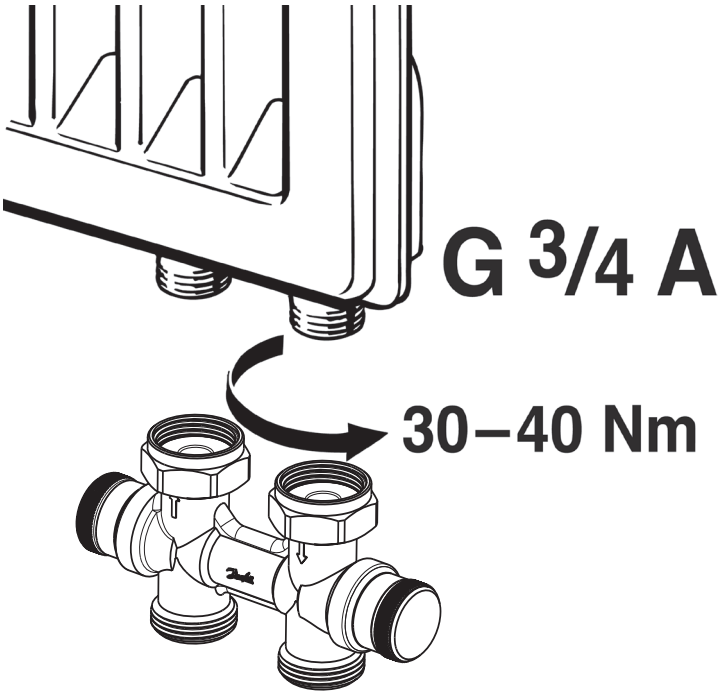


2)

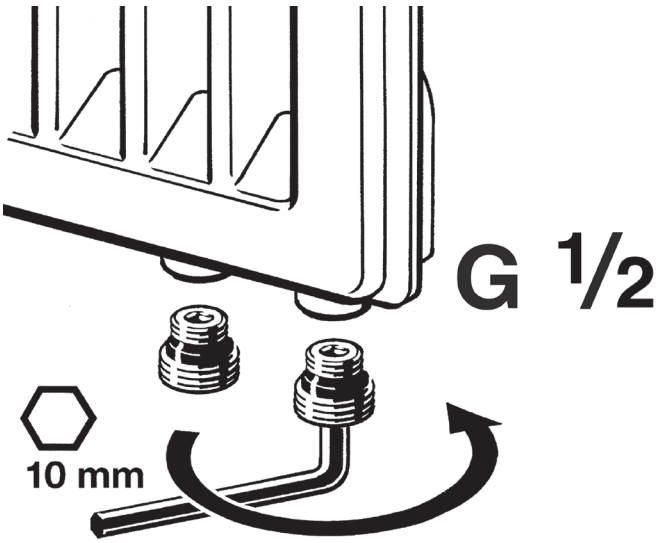


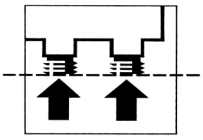

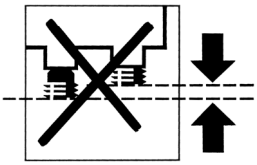

3)

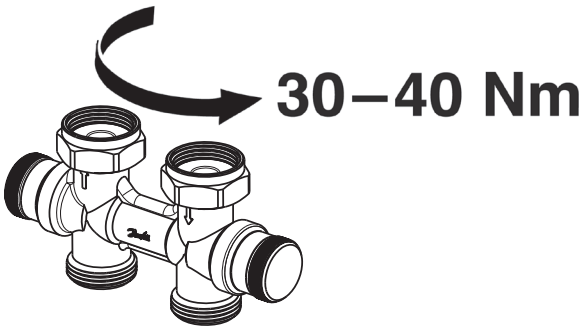


© Danfoss Climate Solutions | 2018/10 | VIIXB202 (AN53095442512600-000101)

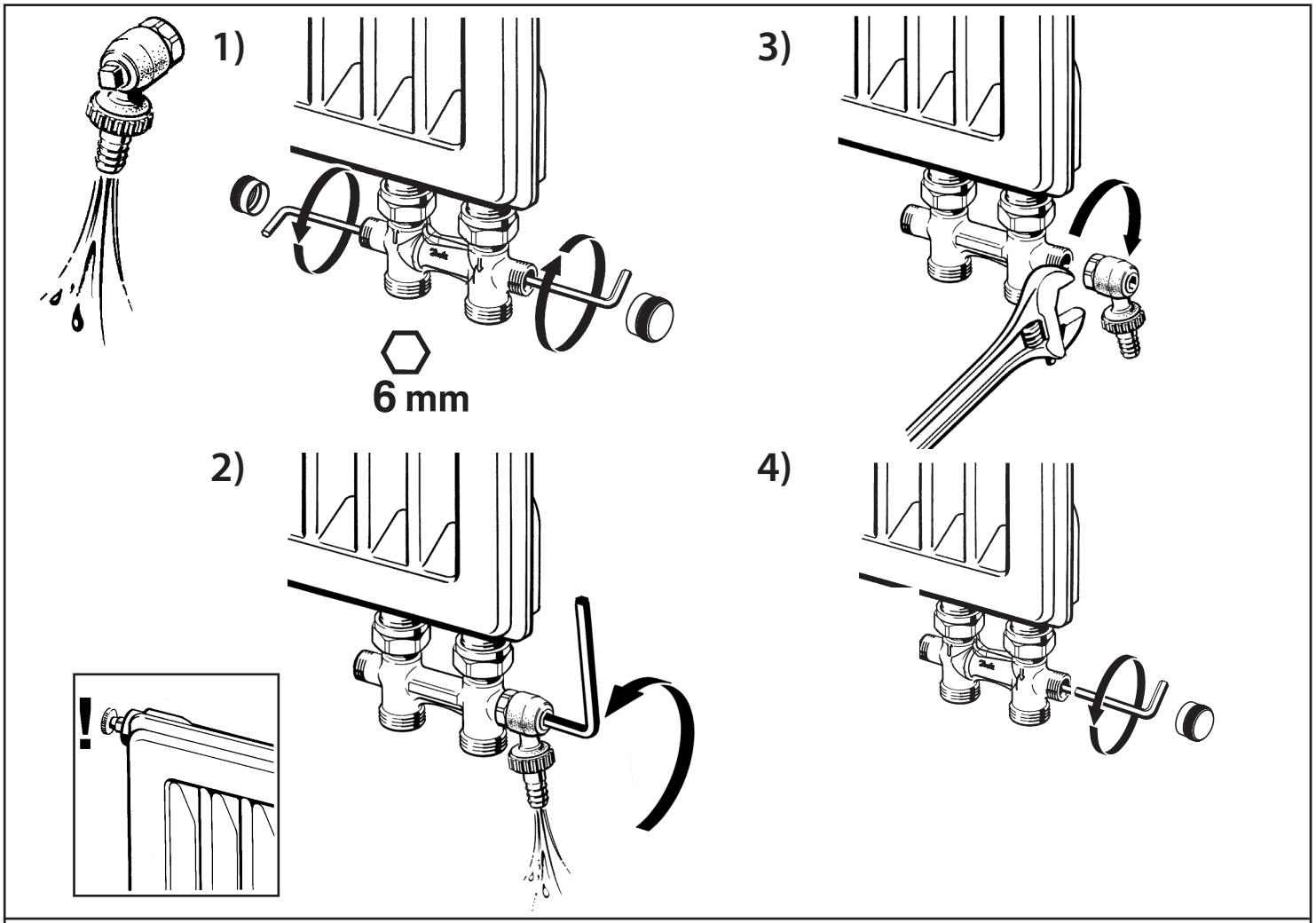


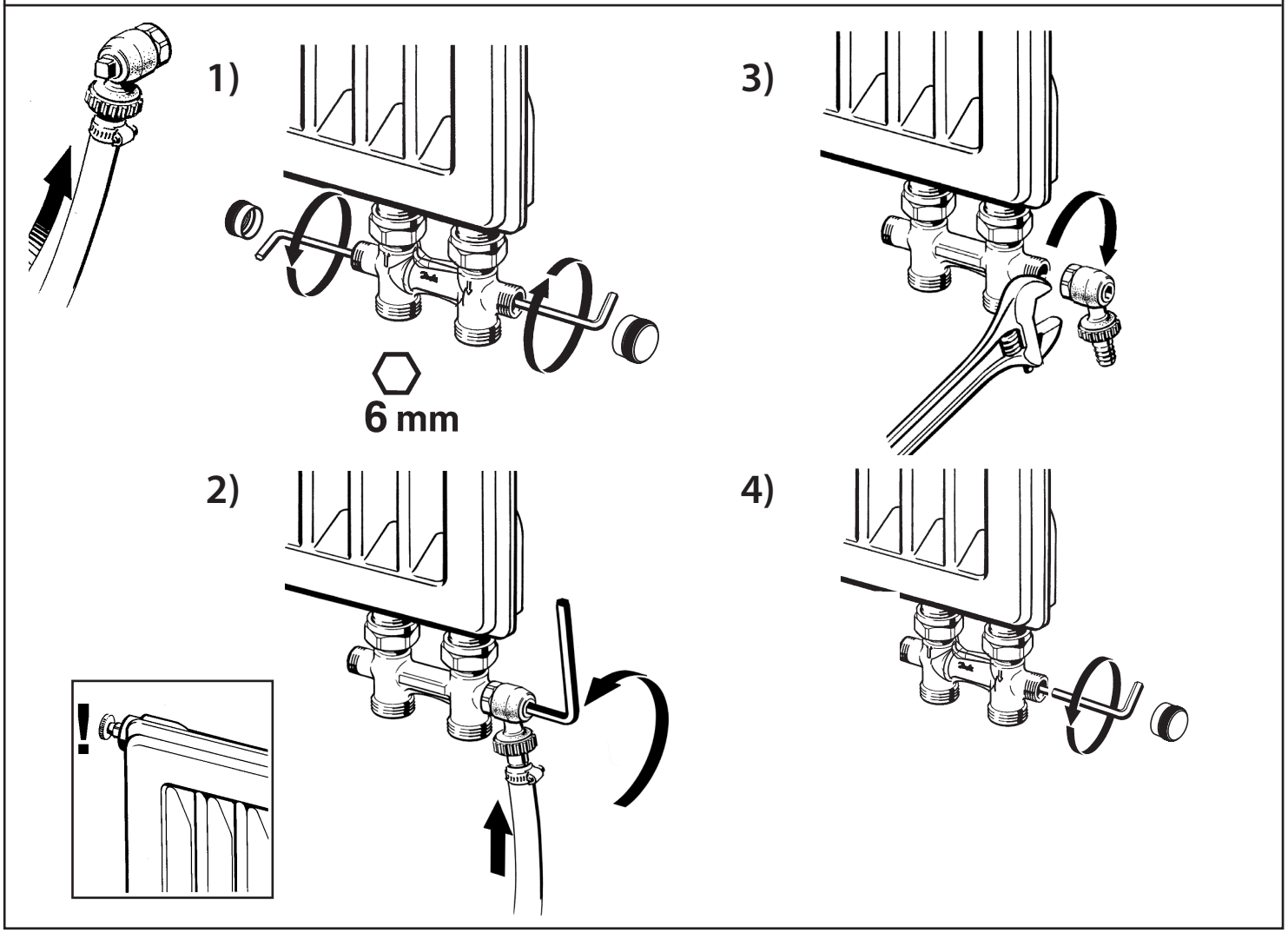


© Danfoss Climate Solutions | 2018/10 | VIIXB202 (AN53095442512600-000101)