ZUCCHINI

50400261	50400265	50403103	55400264
50400262	50400266	50403104	55400265
50400263	50400267	55400262	55400266
50400264	50400268	55400263	55400267

MR

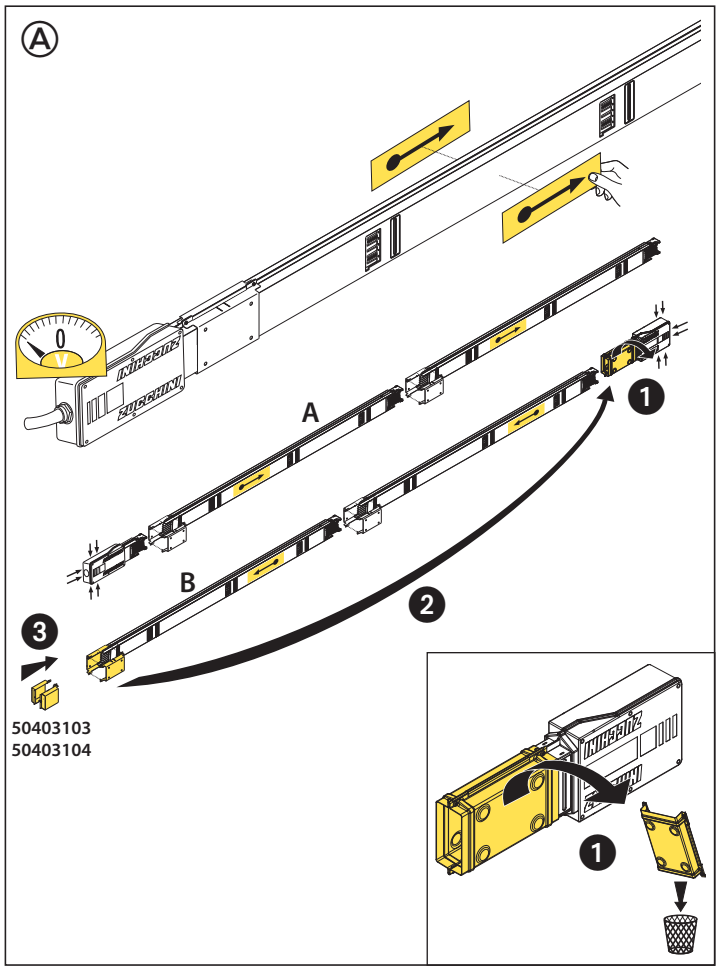

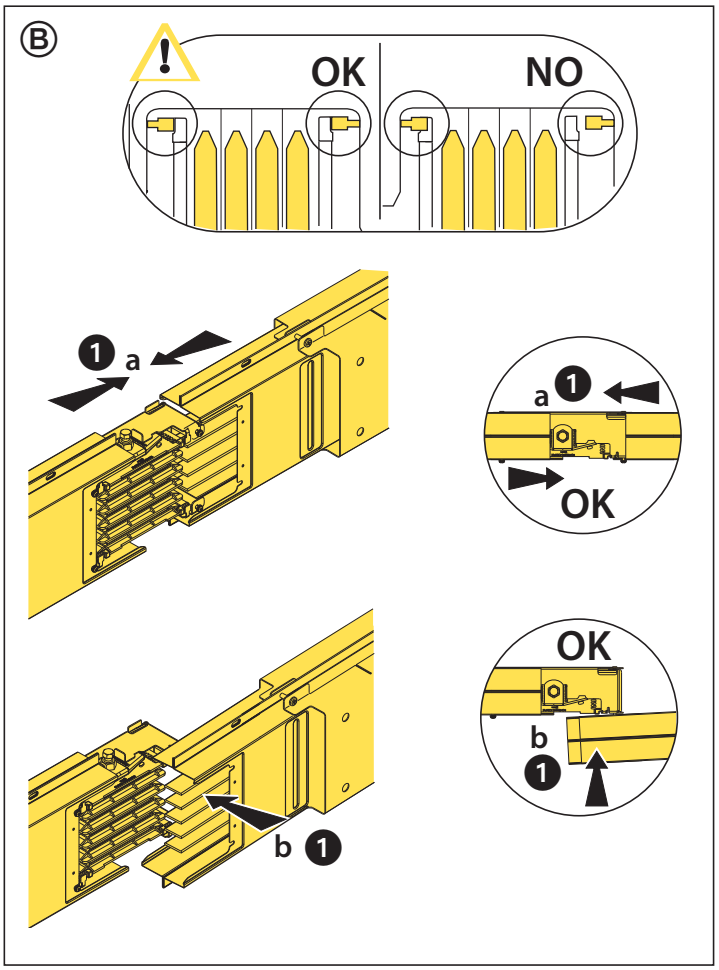

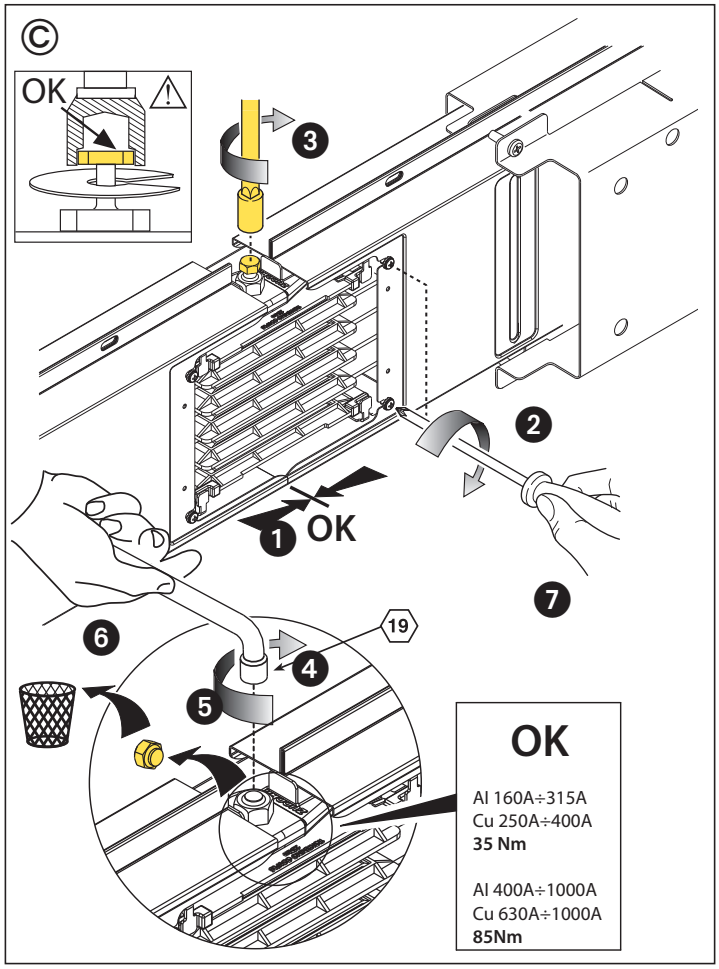

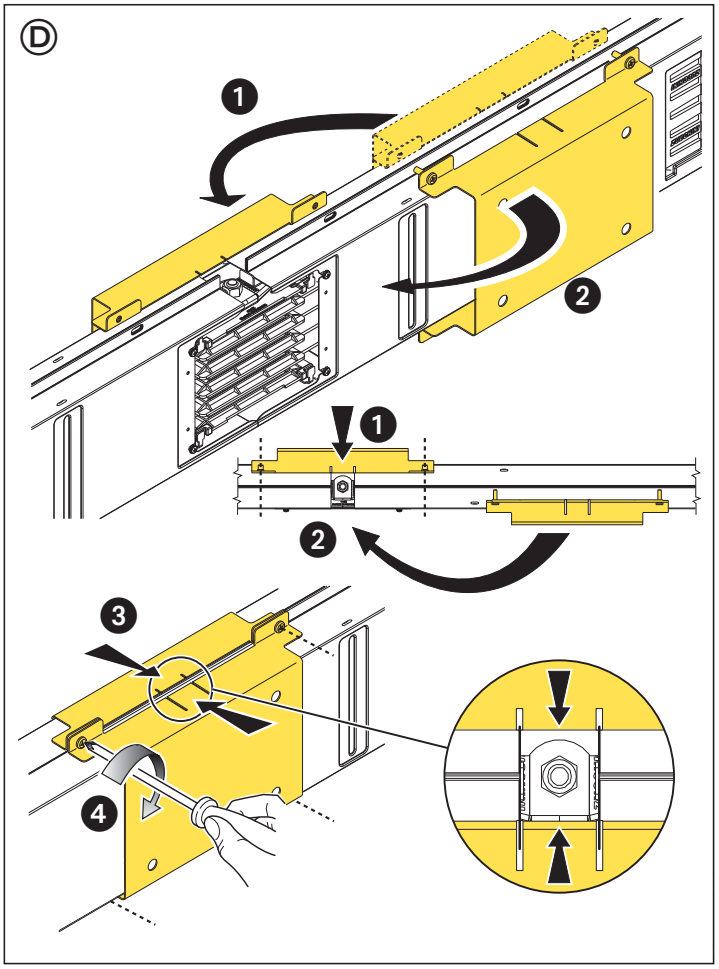

LE07868AA

11/14-01 PC

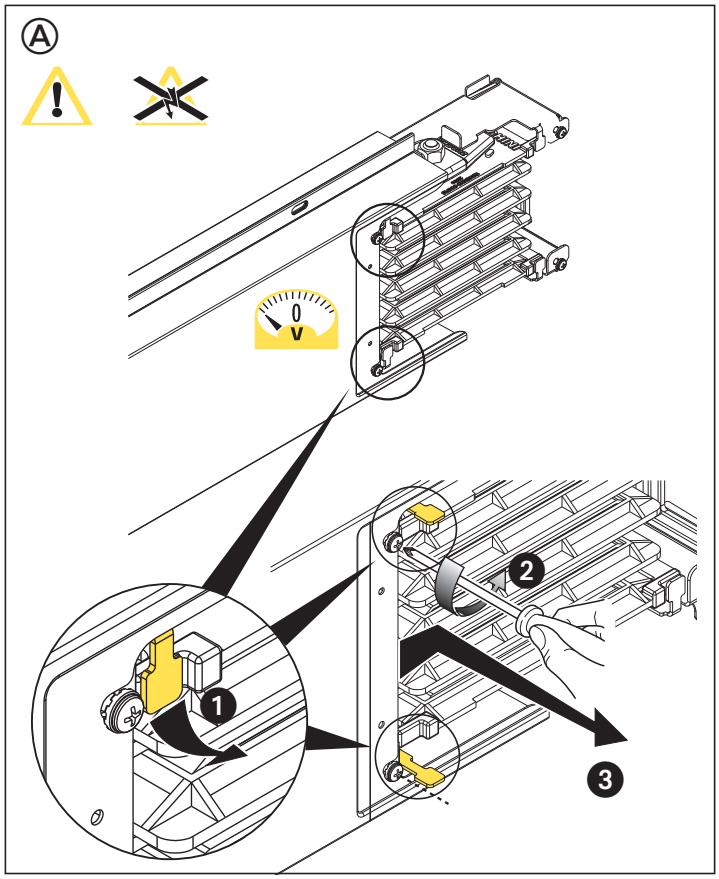
A
0
V
1
2
3

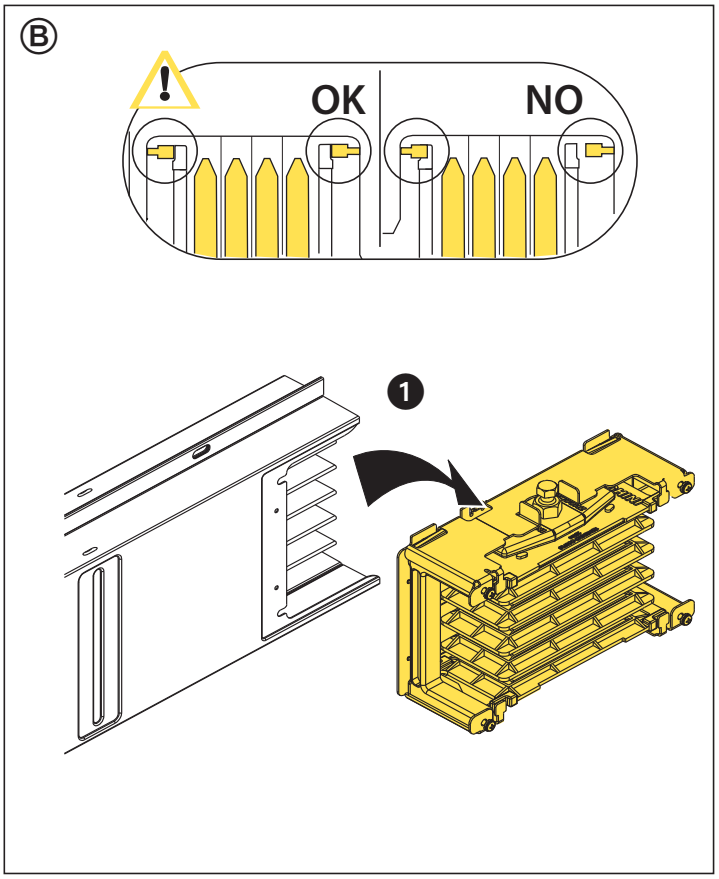
B
OK
NO
1

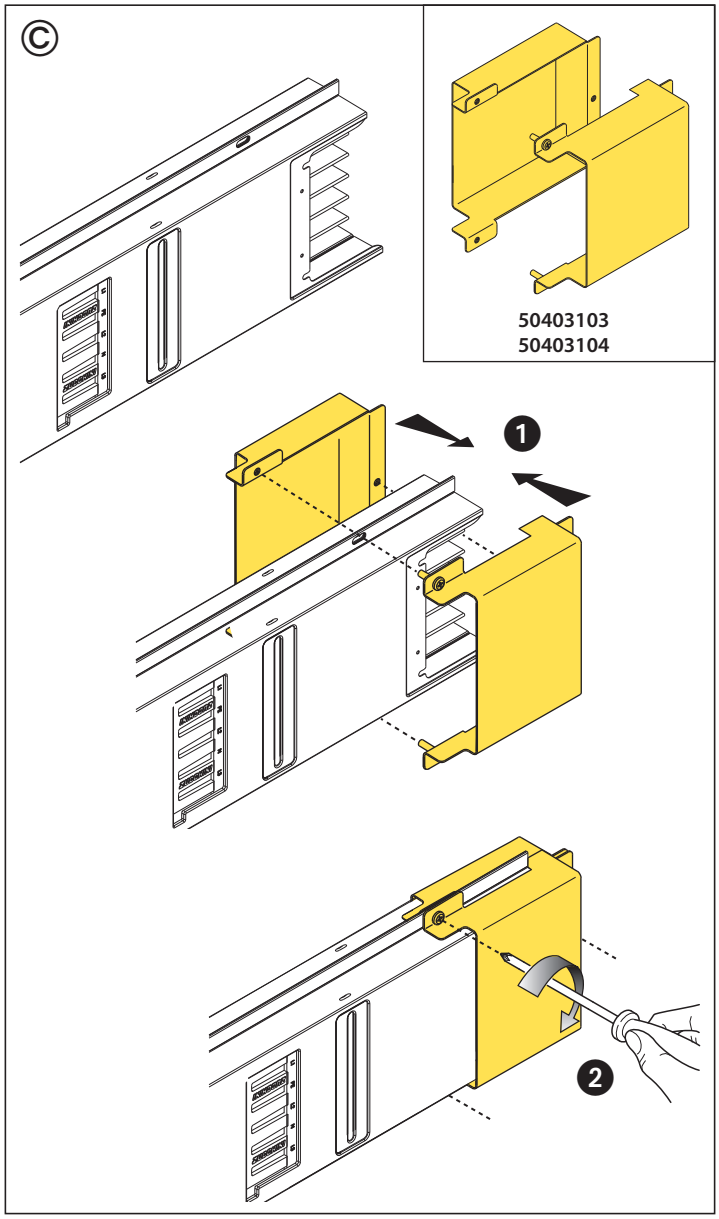
C
50403103
50403104
1
2

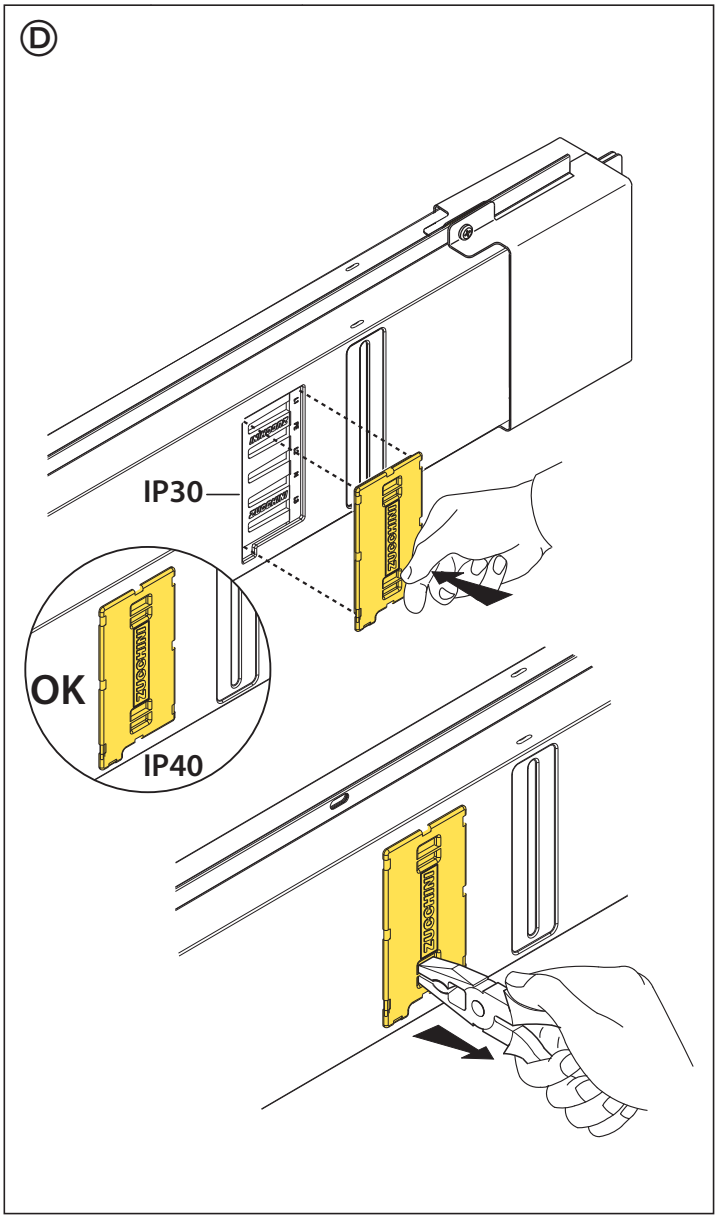
D
IP30
OK
IP40