504011..
504111.. 554012..
504211.. 554111..
504311.. 554211..
554011.. 554311..

MR

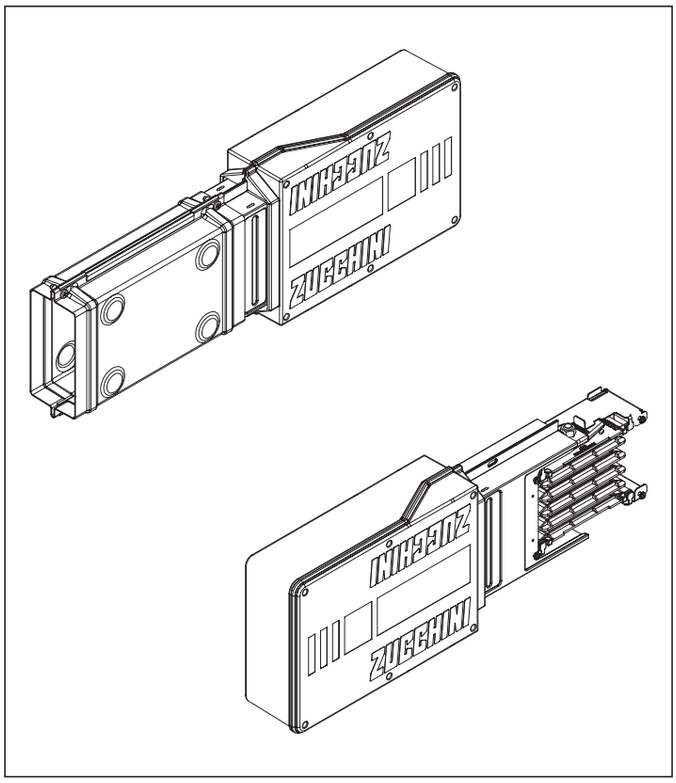

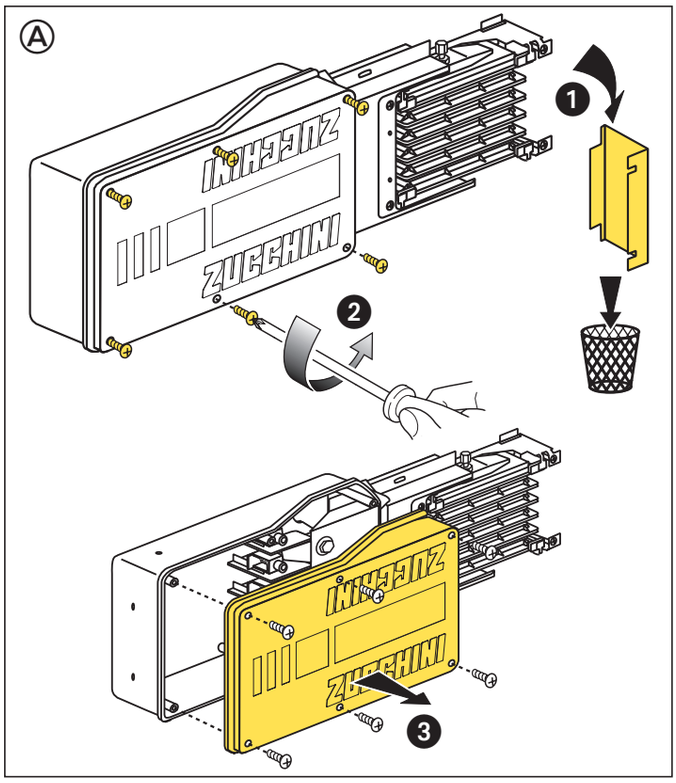

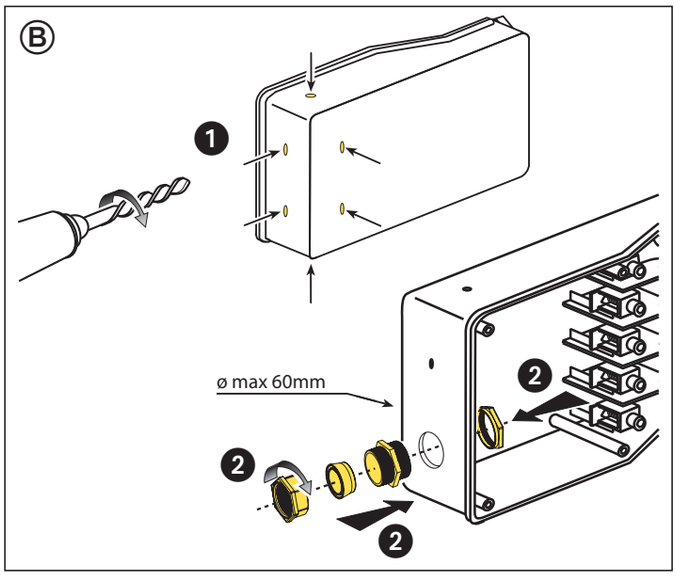

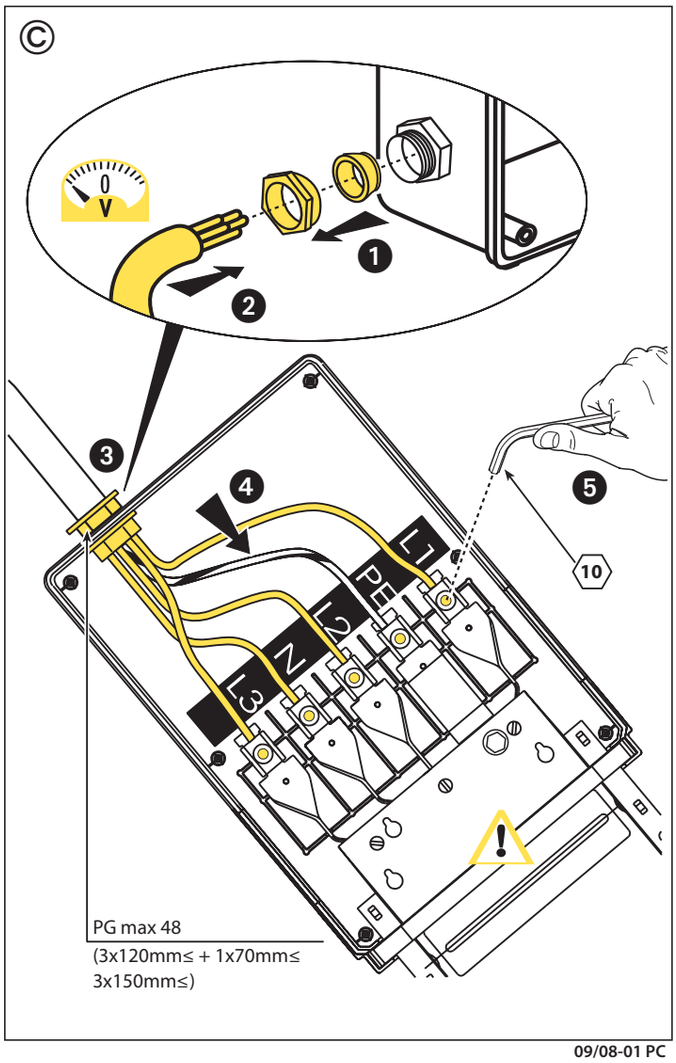

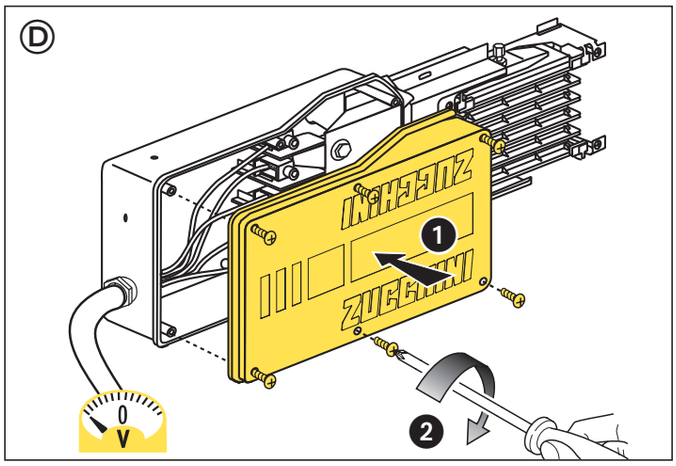

V0366A

09/08-01 PC

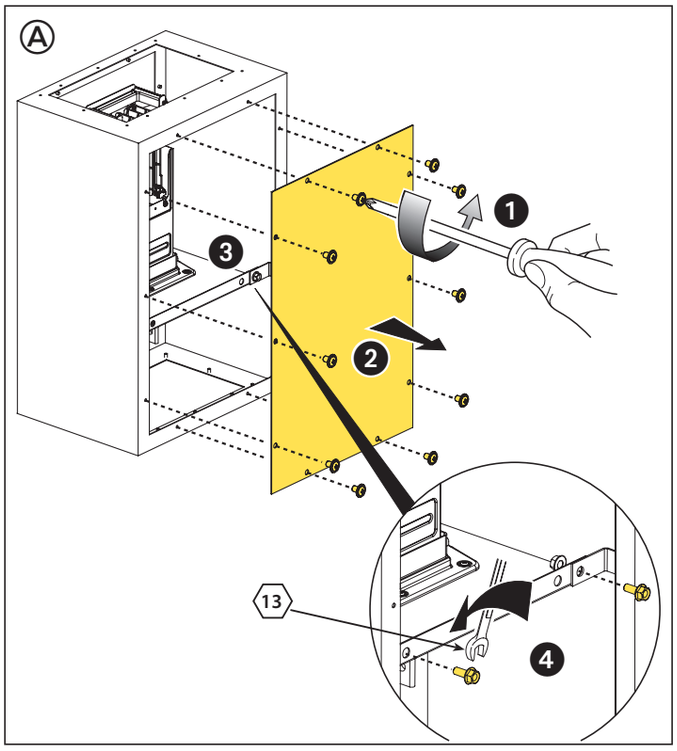
A
1
2
3
4
13

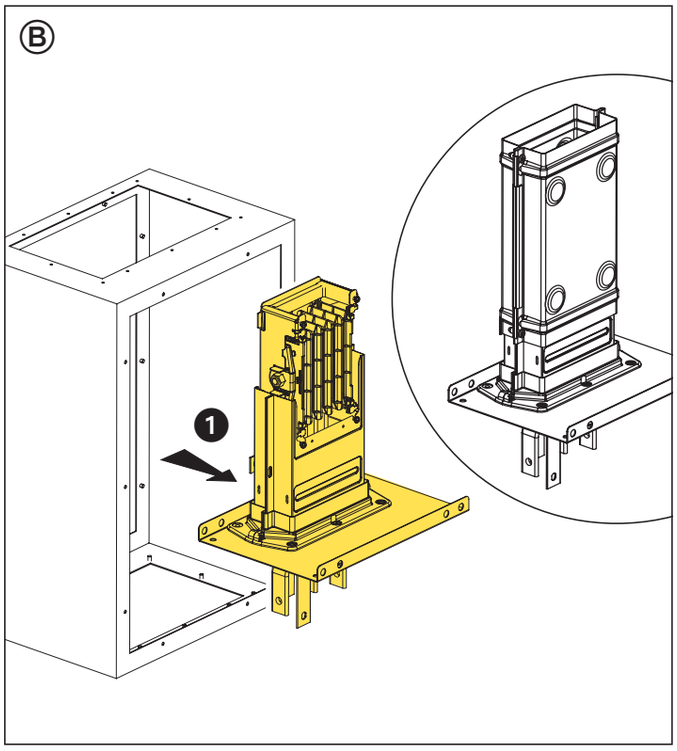
B
1

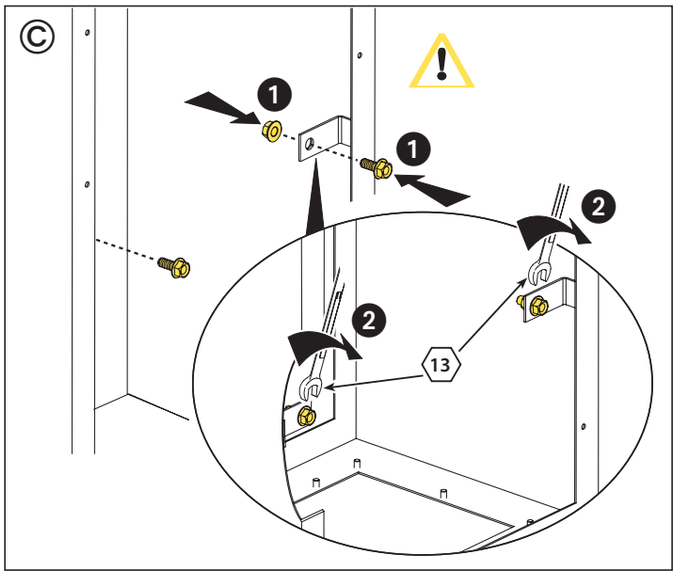
C
1
1
2
2
13

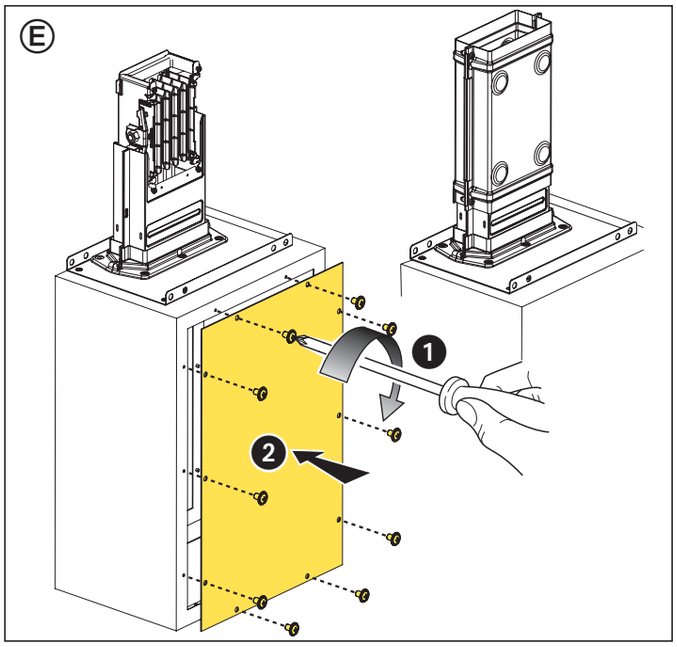
E
1
2

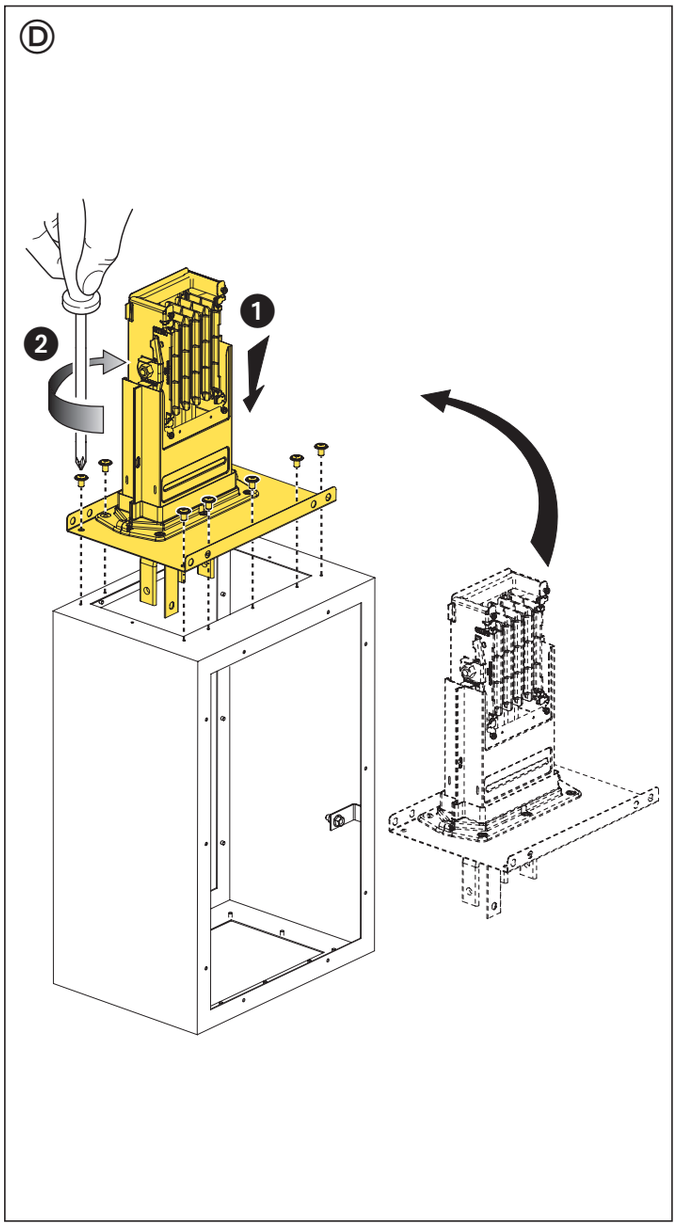
D
1
2