1SNK165032R0000 ✔ ACTIVE

ENTRELEC

TE Internal #: 1SNK165032R0000

Terminal Block & Strip Marking Accessories, Marker Card, 201 -> 300 Mark Details, White, Vertical, -67 – 230 °F [-55 – 110 °C], UL 94V-2

View on TE.com >

Connectors > Terminal Blocks & Strips > Terminal Block & Strip Accessories > Terminal Block & Strip Marking Accessories



Marking Product Type: **Marker Card**

Pre-Printed Mark Details: **201 -> 300**

Primary Product Color: **White**

Product Orientation: **Vertical**

Operating Temperature Range: **-55 – 110 °C [-67 – 230 °F]**

Features

Product Type Features

Marking Product Type	Marker Card

Configuration Features

Number of Cards per Package	1
Number of Digits per Marker - Horizontal	4
Number of Digits per Marker - Vertical	8
Pre-Printed Mark Details	201 -> 300

Body Features

Plastic & Resin Material Type	Polyamide
Product Weight	14 g[.494 oz]
Primary Product Color	White
Product Orientation	Vertical

Dimensions

Product Depth	7.6 mm
Product Width	8 mm[.315 in]
Product Length	7.6 mm[.299 in]
Product Height	12 mm[.472 in]

Usage Conditions

Storage Temperature Range	-55 – 110 °C[-67 – 230 °F]
Operating Temperature Range	-55 – 110 °C[-67 – 230 °F]

Industry Standards

UL Flammability Rating	UL 94V-2

Product Compliance

For compliance documentation, visit the product page on TE.com>

EU RoHS Directive 2011/65/EU	Compliant
EU ELV Directive 2000/53/EC	Compliant
China RoHS 2 Directive MIIT Order No 32, 2016	No Restricted Materials Above Threshold
EU REACH Regulation (EC) No. 1907/2006	Current ECHA Candidate List: JUNE 2022 (224) Candidate List Declared Against: JUNE 2022 (224) Does not contain REACH SVHC
Halogen Content	Low Halogen - Br, Cl, F, I < 900 ppm per homogenous material. Also BFR/CFR/PVC Free
Solder Process Capability	Not reviewed for solder process capability

Product Compliance Disclaimer

This information is provided based on reasonable inquiry of our suppliers and represents our current actual knowledge based on the information they provided. This information is subject to change. The part numbers that TE has identified as EU RoHS compliant have a maximum concentration of 0.1% by weight in homogenous materials for lead, hexavalent chromium, mercury, PBB, PBDE, DBP, BBP, DEHP, DIBP, and 0.01% for cadmium, or qualify for an exemption to these limits as defined in the Annexes of Directive 2011/65/EU (RoHS2). Finished electrical and electronic equipment products will be CE marked as required by Directive 2011/65/EU. Components may not be CE marked. Additionally, the part numbers that TE has identified as EU ELV compliant have a maximum concentration of 0.1% by weight in homogenous materials for lead, hexavalent chromium, and mercury, and 0.01% for cadmium, or qualify for an exemption to these limits as defined in the Annexes of Directive 2000/53/EC (ELV). Regarding the REACH Regulation, the information TE provides on SVHC in articles for this part number is based on the latest European Chemicals Agency (ECHA) 'Guidance on requirements for substances in articles' posted at this URL: https://echa.europa.eu/guidance-documents/guidance-on-reach

Compatible Parts



TE Part # 1SNK708010R0000
ZK6

Customers Also Bought



TE Part #1-222246-0
CONTACT,PLUG,COML BNC PLATED



TE Part #293722-1
NECTOR M PIN HSG FREE HANGING 7P CODE A



TE Part #2844982-1
CCII TYPE VI MLTIMATE PIN/SKT 22-18 ASSY



TE Part #3-1803224-8
CRIMPER,WIRE F

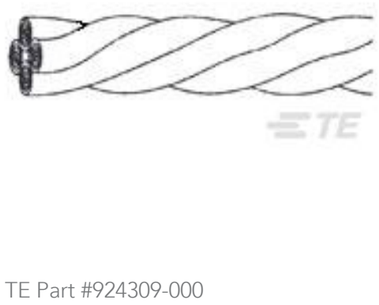

TE Part #924309-000
55PC0141-24-2/5/6/9

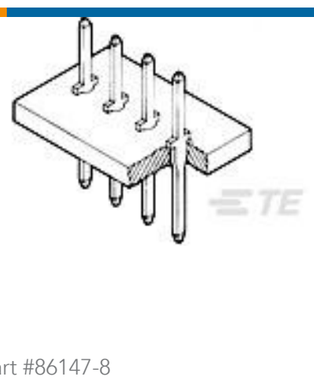

TE Part #86147-8
MOD I POST PLTD 30 AU



TE Part #9-1633933-2
ANVIL, COMBINATION



TE Part #225094-1
N SER BHD JACK WEATHERPROOF



TE Part #227079-9
COMM. BNC-PLUG



TE Part #YDTS20F21-16AC0000
SQUARE FLANGE RECEPTACLE

Documents

CAD Files

3D PDF

3D

Customer View Model

ENG_CVM_CVM_1SNK165032R0000_A.2d_dxf.zip

English

Customer View Model

ENG_CVM_CVM_1SNK165032R0000_A.3d_igs.zip

English

Customer View Model

ENG_CVM_CVM_1SNK165032R0000_A.3d_stp.zip

English

By downloading the CAD file I accept and agree to the Terms and Conditions of use.

Datasheets & Catalog Pages

ENTRELEC Terminal Block - Master Catalog

English

MC812PA 201->300 Vertical

English

SNK SERIES TERMINAL BLOCKS

English

ENTRELEC Terminal Blocks Catalogue (RUS)